Wave

Pool/Spa Combination Systems
Pool Systems
Spa Systems

PE45343RC
PE45343RCT1
PE45343RCT3

INTERMATIC®
Providing a brighter solution.™

Installation and User Guide

Important Safety Instructions

All electrical work must be performed by a licensed electrician and conform to all national, state, and local codes. When installing and using this electrical equipment, basic safety precautions should always be followed, including the following:

DANGER: To reduce the risk of injury, do not remove the suction fittings of your spa or hot tub. Never operate a spa or hot tub if the suction fittings are broken or missing. Never replace a suction fitting with one rated less than the flow rate marked on the equipment assembly.

WARNING: Prolonged immersion in hot water may induce hyperthermia. Hyperthermia occurs when the internal temperature of the body reaches a level several degrees above the normal body temperature of 98.6°F. The symptoms of hyperthermia include dizziness, fainting, drowsiness, lethargy, and an increase in the internal temperature of the body. The effects of hyperthermia include: 1) unawareness of impending danger; 2) failure to perceive heat; 3) failure to recognize the need to exit spa; 4) physical inability to exit spa; 5) fetal damage in pregnant women; 6) unconsciousness resulting in a danger of drowning.

WARNING: To Reduce the Risk of Injury —

- The water in a spa should never exceed 104°F (40°C). Water temperatures between 100°F (38°C) and 104°F (40°C) are considered safe for a healthy adult. Lower water temperatures are recommended for young children and when spa use exceeds 10 minutes.
- Since excessive water temperatures have a high potential for causing fetal damage during the early months of pregnancy, pregnant or possibly pregnant women should limit spa water temperatures to 100°F (38°C).
- Before entering a spa or hot tub, the user should measure the water temperature with an accurate thermometer since the tolerance of water temperature-regulating devices varies.
- The use of alcohol, drugs, or medication before or during spa or hot tub use may lad to unconsciousness with the possibility of drowning.
- Obese persons and person with history of heart disease, low or high blood pressure, circulatory system problems, or diabetes should consult a physician before using a spa.
- Persons using medication should consult a physician before using a spa or hot tub since some medication may induce drowsiness while other medication may affect heart rate, blood pressure, and circulation.

WARNING: Risk of electric shock – Install the control center at least five (5) feet (152.4cm) from the inside wall of the pool and/or hot tub using non-metallic plumbing. Canadian installations must be at least three (3) meters from the water.

Copyright © 2006 Intermatic, Inc.

- Children should not use spas or hot tubs without adult supervision.
- Do not use spas or hot tubs unless all suction guards are installed to prevent body and hair entrapment.
- People using medications and/or having an adverse medical history should consult a physician before using a spa or hot tub.
- People with infectious diseases should not use a spa or hot tub.
- To avoid injury, exercise care when entering or exiting the spa or hot tub.
- Do not use drugs or alcohol before or during the use of a spa or hot tub to avoid unconsciousness and possible drowning
- Pregnant or possibly pregnant women should consult a physician before using a spa or hot tub.
- Water temperature in excess of 100°F (38°C) may be injurious to your health.
- Before entering a spa or hot tub measure the water temperature with an accurate thermometer.
- Do nut use a spa or hot tub immediately following strenuous exercise.
- Prolonged immersion in a spa or hot tub may be injurious to your health.
- Do not permit any electric appliance (such as a light, telephone, radio, or television) within 5 feet (1.5m) of a spa or hot tub.
- The use of alcohol, drugs or medication can greatly increase the risk of fatal hyperthermia in hot tubs and spas.
- Water temperature in excess of 100°F (38°C) may be hazardous to your health.

WARNING: A terminal bar marked “GROUND” is provided with the control center. To reduce the risk of electrical shock, connect this terminal bar to the grounding terminal of your electric service or supply panel with a continuous copper conductor having green insulation and one that is equivalent in size to the circuit conductors supplying this equipment, nut no smaller than no. 12 AWG (3.3mm). In addition, a second wire connector should be bonded with a no. 8 AWG (4.115mm) copper wire to any metal ladders, water pipes, or other metal within five (5) feet (1.52m) of the tub.

WARNING: A ground-fault circuit-interrupter must be provided if this device is used to control underwater lighting fixtures. The conductors on the load side of the ground-fault circuit-interrupter shall not occupy conduit, boxes or enclosures containing other conductors unless the additional conductors are also protected by a ground-fault circuit-interrupter. Refer to local codes for complete details.

Contents

Section 1: System Overview **6**
Additional Detail on Key Components 7
Three-Circuit Clock *(P1353ME)* 7
Valve/Pump Switch *(P42343ME)* 8
24-Volt Valve Actuator *(PE24VA)* 8
Panel-Mounted Transceiver *(PE650)* and Antenna *(0000000)* 8
Wireless Hand-Held Transceiver *(PE950)* 9
Transceiver Repeater Module 9
OMRON Relay Assembly *(143T145A)* 9
Water Temperature Sensor *(178PE4)* 9
Optional — Three-Button Wired Remote Control *(133PE1484A)* 10
Optional — Freeze (Air Temperature) Sensor *(178PA28A)* 10

Section 2: Plumbing Examples **11**
For Pool and Spa Combo Installations 11
For Booster Pump Pool Cleaner Installations 11
For Non-Booster Pump Pool Cleaner Installations 12

Section 3: Control Center Installation **13**
Mounting the Control Center 13
Wiring the System Power 13
Bonding the Control Center 14
Wiring the Individual Equipment 14
If Wiring 120-Volt Loads: 15
If Wiring Combination 120- and 240-Volt Loads: 17
Wiring Underwater Lights 18
High-Voltage Underwater Lights 18
Low-Voltage Underwater Lights 19
Low-Voltage Wiring 20
Water Temperature Sensor 20
Freeze (Air Temperature) Sensor 20
Motorized Valve Actuator Connection and Synchronizing 21
Heater Fireman Switch Connection 22
Connection to the Three-Circuit Clock 22
Connection for Teledyne Laars Heater 22
Connection for Raypak Heaters 22
Connection for Hayward Heaters 23
Connection for Pentair Heater 23
Connection for Sta-Rite Heaters 24

Section 4: Programming the Three-Circuit Clock Mechanism **25**
Overview of Three Circuit Clock Control Panel 25
Identifying Connections and Selecting Proper Input Voltage 26
Connection Detail 26

Copyright © 2006 Intermatic, Inc.

Circuit Ratings....27
Mode Selection/Definition....27
Mode 1 — (Aux1, Aux2, Aux3)....27
Mode 2 — (Pump High, Pump Low, Aux3)....28
Mode 3 — (Pump, Aux2, Cleaner Pump)....28
Mode 4 — (Pump High, Pump Low, Cleaner Pump)....29
Mode 5 — (Pump, Pump, Aux3)....29
Setting Mode....30
Setting Time of Day....30
Setting the On/Off Times for Each Circuit....31
Notes on Setting On/Off Times for Each Mode....32
Setting the Heater's Cool Down Time (optional)....33
Setting Freeze Temperature (optional)....34

Section 5: Programming the Valve/Pump Switch Mechanism....35
Overview of the Valve/Pump Switch Control Panel....35
Installing the Three-Button Wired Remote Control....37
Installing Other Wired Remote Connections (Master Switch)....37
Connecting the Heater Switch to Control Temperatures....38
If Connecting an External Timer:....38

Section 6: Programming the Hand-Held Remote Transceiver....39
Overview....39
Synchronizing the Hand-Held with the Receiver....39
Deleting Any Existing Programming....39
Linking the Hand-Held Remote to the Receiver....40
Testing I-Wave Reception....41
Installing and Configuring Repeaters When Necessary....42
Everyday Use of the Hand-Held Controller....43
Changing between Pool and Spa....43
Setting Pool and Spa Temperatures....43
Operating Programmed Functions....44
Advanced Features....44
Configuring Two or More Hand-Held Remote Controllers....44
Programming to Protect a Pool Cleaner Pump....45
Using Two Hand-Held Controllers to Operate the System....46
Manually Turning Equipment On and Off....46

Section 7: Checking Out the System / Troubleshooting....47

Section 7: Enclosure Specifications....49

Section 9: Warranty....50

Section 1:

System Overview

The Intermatic I-Wave Pool/Spa Wireless Control System brings wireless control to a new level of simplicity and affordability. What makes the system distinctive is that it is:

- **Easy to Use** — with simple, push button controls and a clear, easy-to-read display panel
- **Everything You Need** — providing, in its standard configuration, the functionality and control called for in nearly every installation.
- **Modular** — components snap in and out of the enclosure as needed to simplify installation and repair, and to make customization simple for the installer. No need for the technician to spend hours troubleshooting a circuit board…just snap in a replacement.
- **Dependable** — with Z-Wave® technology that lets you plug inexpensive repeaters into an electrical outlet to relay signals in any part of the site with dead spots. Z-Wave® technology eliminates intermittant signal problems experienced with many other systems.
- **Cost Efficiency** — a superior system, easier to install and maintain, with better dependability, and at a cost that's competitive with any other system available.

The standard configuration for the I-Wave Pool/Spa Wireless Control System configuration is shown in Figure 1-1. You can order individual components for a custom configuration or system as indicated.

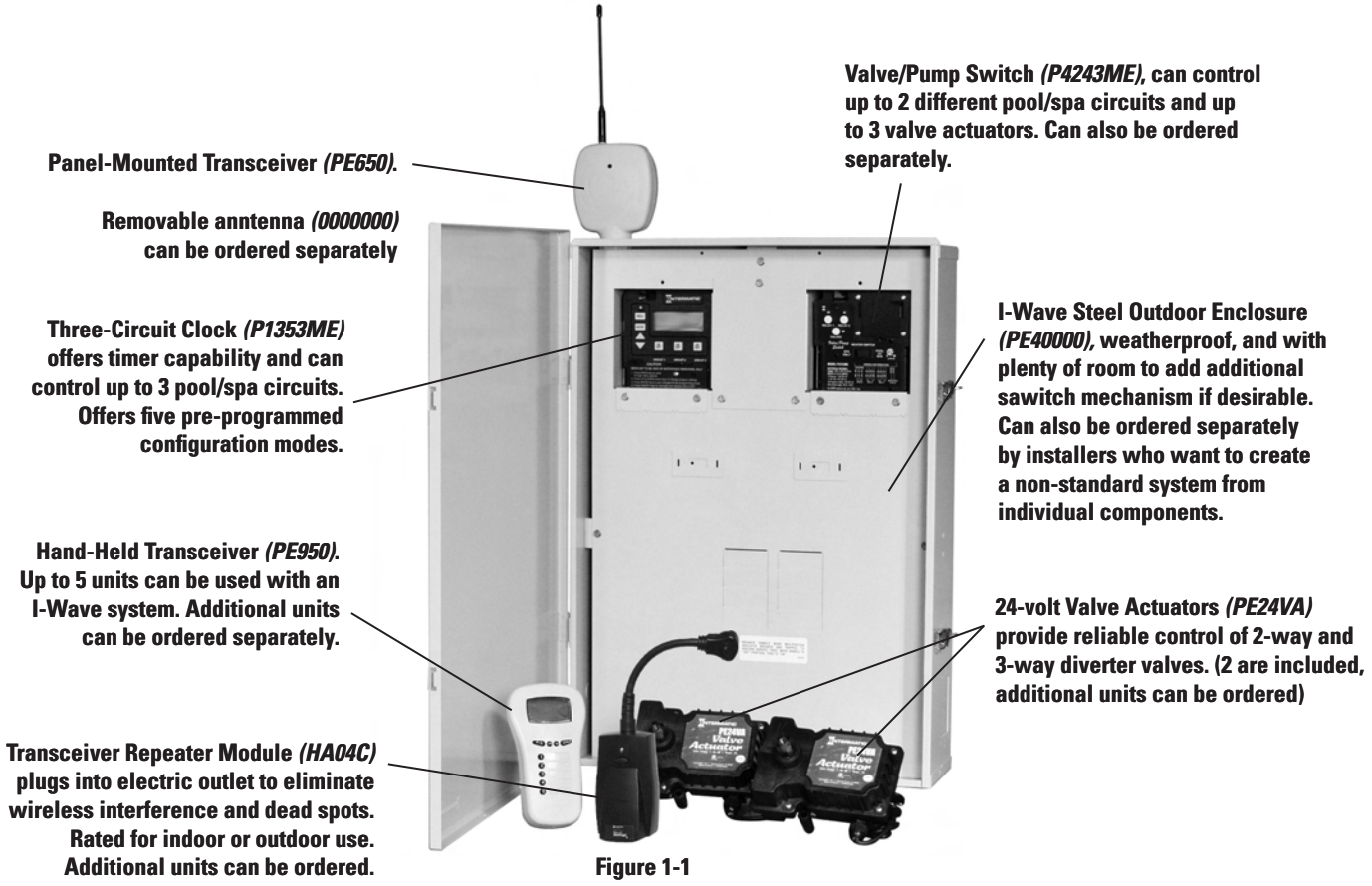

Figure 1-1

Copyright © 2006 Intermatic, Inc.

The standard system is shipped with snap-in mechanisms in place inside the enclosure, the panel mount transceiver attached to the top of the enclosure, with antenna to be attached. Components are already interconnected and are ready for wiring. System model numbers are designed to make sure the installation meets local code as follows:

- **PE45343RC** — the basic radio-controlled system.
- **PE45343RCT1** — a special version with a 100 watt transformer for 12-Volt underwater lighting, where required by local code. The 100-watt transformer *(PA117)* can also be ordered separately for installation into standard model *PE45343RC*.
- **PE45343RCT3** — a special version with a 300 watt transformer for 12-Volt underwater lighting, where required by local code. The 300-watt transformer *(PA116)* can also be ordered separately for installation into standard model *PE45343RC*.

You can order most system components individually to assemble a custom I-Wave system as desired.

Additional Detail on Key Components

Three-Circuit Clock *(P1353ME)*

Designed for aftermarket and retrofit applications, the P1353ME has the ability to program up to three different circuits. Choose between five pre-programmed modes of operation, which include single speed pump or 2-speed pump/cleaner pump combinations. In addition, programmed modes that include auxiliaries can control pumps up to 3 HP as well as underwater, garden, and/or fountain lighting. Countdown and Override features allow cycle interruptions when pool/spa service is required. All timing and protection, associated with filter pump/cleaner pump combinations and two-speed pumps, has already been integrated into the software. This mechanism can also be installed into almost any Intermatic enclosure.

- 120 or 208-240 Volt Input Voltage
- Memory Back-Up
- Heater Protection (Fireman Switch)
- LCD Readout
- Shipping Weight — 3 lbs. (1.4 kg)
- Agency Approval — CSA/C-US

CONTACT RATINGS – EACH CIRCUIT, ALL MODES

- 20A Resistive, 120/240 VAC., 50/60 Hz
- 20A FLA@120 VAC, 96A LRA@120 VAC, 50/60 Hz
- 17A FLA@240 VAC, 80A LRA@120 VAC, 50/60 Hz
- 5 Amps Tungsten, 120/240 VAC, 50/60 Hz
- 5 Amps Ballast, 120/240 VAC, 50/60 Hz

Valve/Pump Switch *(P42343ME)*

Designed for aftermarket and retrofit applications, the P4243ME is most suited for controlling up to two different circuits associated with pool/spa combinations but can also be used to control all the equipment typically needed in connection with water features, water gardening, solar heating, and other similar applications. This unit snaps into almost any Intermatic enclosure and features two 3HP double pole relays, one of which can be controlled by an external timer, 24 volt supply for up to three valve actuators, automatic HIGH/LOW water temperature selector, heater connection circuit, and push button control for each load with indicator lights on the face of the control. In addition, the unit has connections for a hard-wired or wireless remote and a master switch controller.

- 120 or 208-240 Volt Input Voltage
- Controls up to three valve actuators
- Switches heater thermostat
- Remote control capabilities
- Shipping Weight — 3 lbs. (1.4 kg)
- Agency Approval — CSA/C-US

CONTACT RATINGS – EACH CIRCUIT

- 17A Resistive, 120/240 VAC., 50/60 Hz
- 1.5 HP @ 120 VAC., 50/60 Hz
- 3.0 HP @ 240 VAC., 50/60 Hz
- 10 Amp Tungsten, 120/240 VAC, 50/60 Hz

24-Volt Valve Actuator *(PE24VA)*

Designed with quality in mind, Intermatic's 24-volt valve actuators provide reliable control of 2-way and 3-way diverter valves for pool/spa combinations and water features. The water flow can be altered for specific applications through the adjustable cam, which rotates diverter valves to multiple degree settings. The cam settings can be easily adjusted by simply removing the lid. These valve actuators are compatible with all pool/spa valves currently offered in the industry and will retrofit into all pool/spa control systems.

- 24VAC Input Voltage
- Automates compatible diverter valves for pool/spa combos
- Adjustable cam rotates diverter valves to multiple degree settings
- Designed to operate most 2-way and 3-way diverter valves
- Shipping Weight - 3 lbs. (1.4 kg)
- Agency Approval - CSA/C-US

Panel-Mounted Transceiver *(PE650)* and Antenna *(0000000)*

The main function of the Panel-Mounted Transceiver is to take commands from the Wireless Hand-Held Transceiver and hand them off to two mechanisms (*P1353ME* and/or *P4243ME*) in the I-Wave Enclosure box. This unit can control:

- One *P1353ME* unit and one *P4243ME* unit
- Two *P1353ME* units
- Two *P4243ME* units

In cases where the two devices are too far apart for direct communication, a Transceiver Repeater Module *(HA04C)* will relay commands between the two devices. Shown here with its removable antenna *(0000000)*.

Copyright © 2006 Intermatic, Inc.

Wireless Hand-Held Transceiver *(PE950)*

The main function of the Wireless-Hand-Held Transceiver is to transmit user commands to the Panel Mount Transceiver. The device can control up to five loads, typically:

- The three loads in the Three-Circuit Clock
- The two relays in the Valve/Pump Switch, usually water temperature controls for pool/spa
- The actuators that switch between pool and spa

The unit floats if thrown in the pool or spa, is water-submersible, shock resistant, and requires three (3) AA batteries (supplied). Expected battery life is about one year in typical use.

The Wireless Hand-Held Transceiver can only communicate with the Panel-Mounted Transceiver and Transceiver Repeater Module, and is compatible with no other hardware. In addition, when the components of a specific system are linked together into a network, communication with another neighboring system cannot occur.

Transceiver Repeater Module

The Transceiver Repeater Modules *(HA04C)* ensure that no problems in reception occur between the Hand-Held Controller(s) and the Panel-Mounted Transceiver. Reception is affected by distance (about 100 feet, direct line of sight) and by physical obstacles (like brick walls or structures). However, by plugging in a Transceiver Repeater Module where necessary, long distances or physical obstructions can be overcome.

The I-Wave System includes one Transceiver Repeater Module. Additional units can be odered from Intermatic.

OMRON Relay Assembly *(143T145A)*

There are two OMRON Relay Assemblies (*143T145A*) in the Valve/Pump Switch Mechanism ( ) which switch either 120V or 240V loads. These relays are replaceable and can be ordered separately.

CONTACT RATINGS – EACH CIRCUIT

- 17A Resistive, 120/240 VAC., 50/60 Hz
- 1.5 HP @ 120 VAC., 50/60 Hz
- 3.0 HP @ 240 VAC., 50/60 Hz
- 10 Amp Tungsten, 120/240 VAC, 50/60 Hz

Water Temperature Sensor *(178PE4)*

The Intermatic Water Sensor (*178PE4*) monitors both pool and spa water temperature, depending on the position of the diverter valves. Installation is necessary for the thermostatic control to work. The sensor can be ordered separately.

Optional — Three-Button Wired Remote Control *(133PE1484A)*

The Three-Button Wired Remote Control *(133PE1484A)* plugs into either the Three-Circuit Clock *(PE1353ME)* or Valve/Pump Switch *(PE4243ME)*.

When installed as part of a system, it replaces the wireless method of controlling the three circuits within the mechanism. For more information, refer to *Installing a Wired Remote Connection* in Section 4. The Three-Button Wired Remote Control must be installed where a third mechanism is needed in the enclosure box, since the Wireless Hand-Held Transceiver can only control two mechanisms.

Optional — Freeze (Air Temperature) Sensor *(178PA28A)*

Need Picture

Add the Intermatic Freeze or Air Temperature Sensor (*178PA28A*) to installations where below-freezing outdoor temperatures are a concern. Programming information to incorporate the sensor is provided on page 34.

Copyright © 2006 Intermatic, Inc.

Section 2:

Plumbing Examples

The following diagrams show several plumbing and wiring examples of installations for pool and spa that share a single filter pump, filter, and heater. If you are installing a pool only or spa only, these diagrams will not apply.

For Pool and Spa Combo Installations

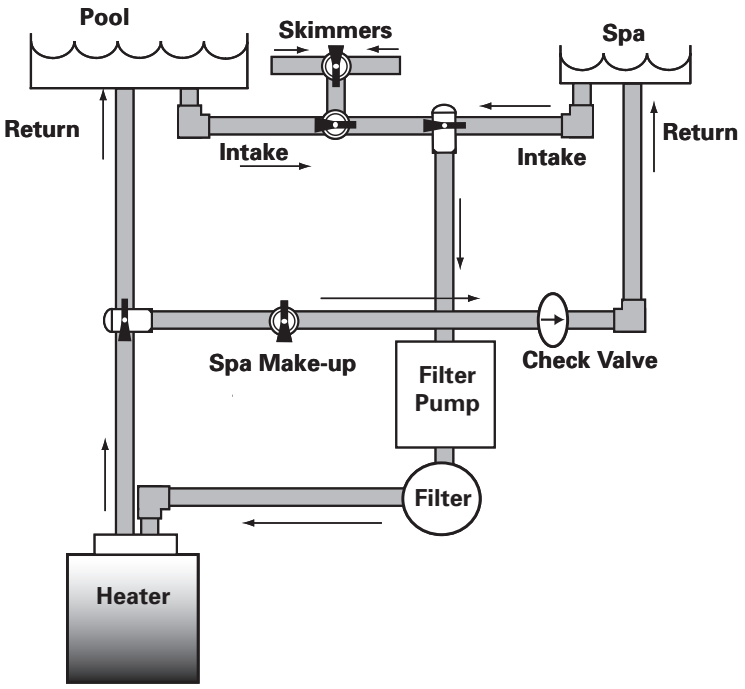

For Booster Pump Pool Cleaner Installations

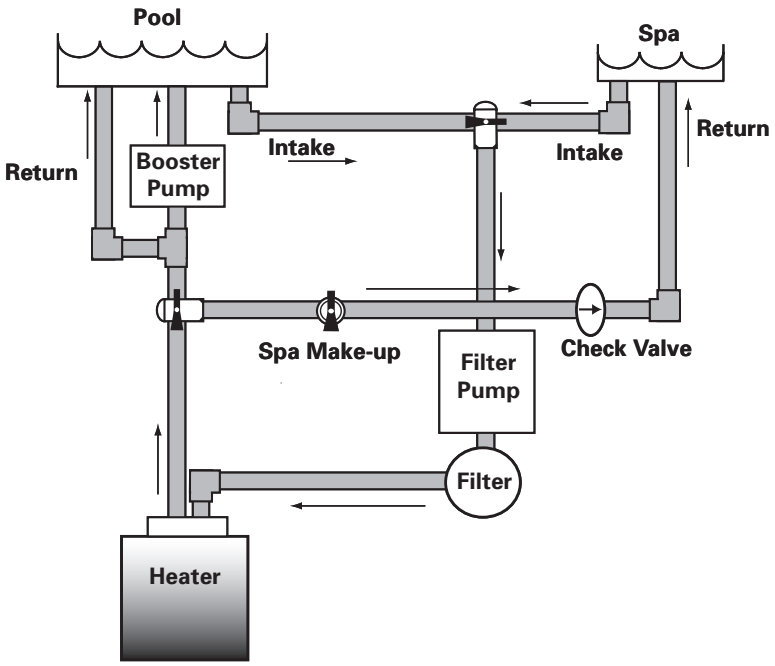

For Non-Booster Pump Pool Cleaner Installations

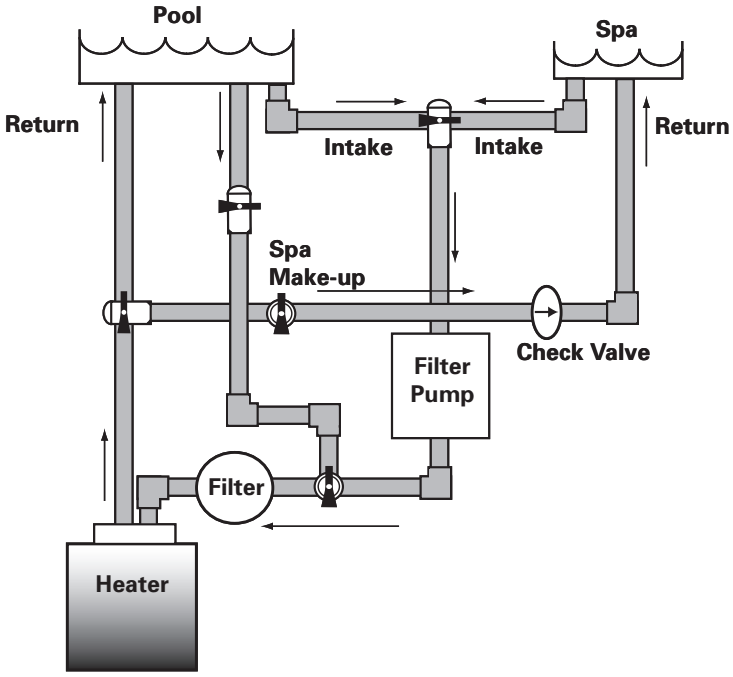

Copyright © 2006 Intermatic, Inc.

Section 3:

Control Center Installation

Mounting the Control Center

Special code requirements apply to your I-Wave Control System. To ensure safe installation, please follow all applicable national state, and local codes when installing the Control Center.

Locate your Control Center near the pool/spa equipment pad at least five feet or more away from either the pool or spa equipment and at least five feet off the ground.

Mounting brackets have been provided to assist you in your installation.

NOTE: The Control Center is not to be considered as suitable for use as Service Equipment. Therefore, it is required to have the appropriate means of disconnection, circuit isolation, and/or branch circuit protection installed at the Main Power Panel.

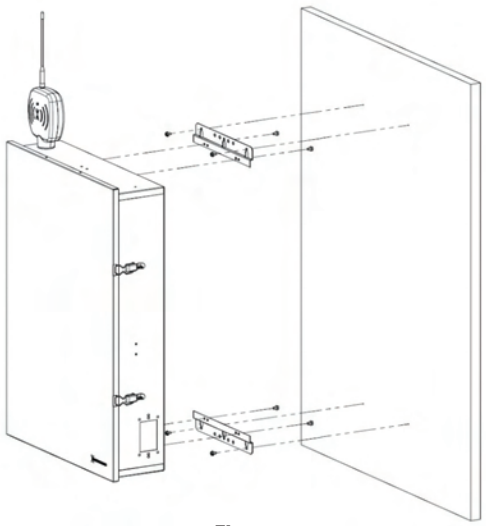

Figure 3-1

Wiring the System Power

Run wire from the Main Power Panel to your Control Center and connect the leads to the Control Center Breaker Base. See detail in Figure 3-2 at the right.

The breaker base of your Control Center is capable of handling up to 125 amps. You must comply with the applicable local codes and use the proper gauge wiring from your Main Power panel to your control center breaker base. The proper gauge wire will be determined by the length of wire required and the 125 Max Amp rating.

WARNING: Potentially high voltages in the Control Center can create dangerous electrical hazards, possibly causing death, serious injury, or property damage. Turn off the Main Power to the Control Center to disconnect or service the I-Wave Control Center.

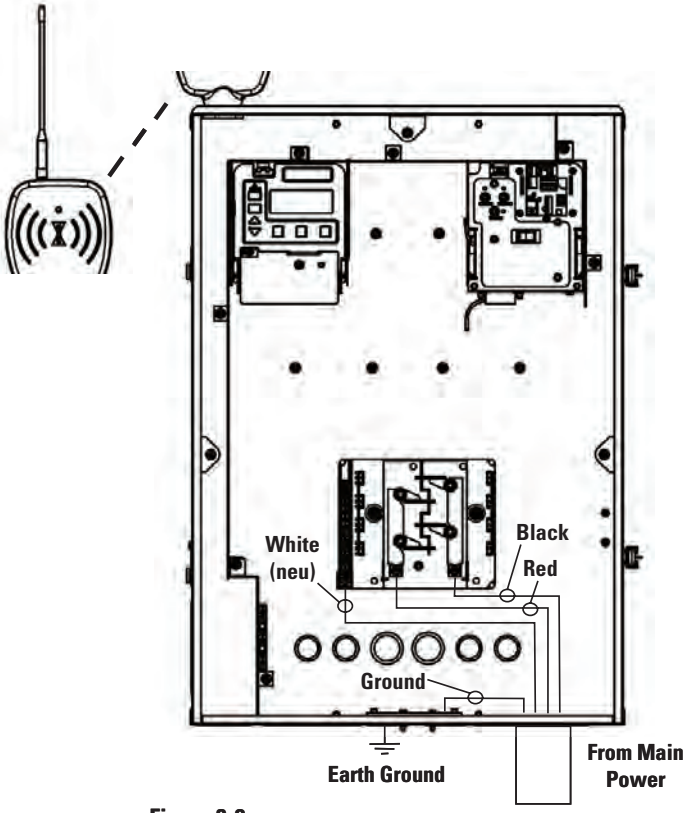

Figure 3-2

Bonding the Control Center

Some state local codes require bonding the control center to the bonding grid. If this is required, install a bonding lug *(130PA1362)* to the Control Center enclosure and connect a #8 solid copper core wire, to an approved earth ground, (i.e. approved ground stake, or conducting metal water pipe buried to a sufficient depth, etc.). See detail in Figure 3-3 at the right.

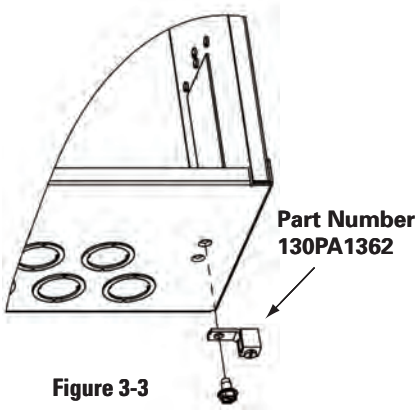

Figure 3-3

Wiring the Individual Equipment

Each piece of pool or spa equipment requires its own high voltage relay and associated circuit breaker branch protection. Each circuit breaker should be sized according to your load and the appropriate local codes.

The I-Wave Control System consists of two Intermatic snap-in mechanisms:

- P1353ME — with three timed circuits each comprised of three SPST relays
- P4243ME — with two on-demand circuits comprised of two DPST relays

Even though the three circuit clock can easily handle on-demand circuits, any equipment that requires programmed ON/OFF times should be wired to the three-circuit P1353ME mechanism (i.e., filter pumps, booster pumps, etc.). On-demand equipment (i.e., blowers, lights, etc.) should be wired to the P4243ME valve-controller mechanism. This practice will maximize your control capabilities.

All circuits are independent contacts. Therefore you can mix and match 120-Volt and 240-Volt loads within each mechanism. Refer to the following illustrations for sample wiring diagrams.

Copyright © 2006 Intermatic, Inc.

If Wiring 120-Volt Loads:

- For safety purposes, the factory default setting for the source voltage of a *P1353ME* mechanism is for 240 Volts.
- For 120-Volt installations, be sure you set the Source Voltage Selection Jumper on the back of the Three-Circuit Clock mechanism *(P1353ME)* for 120 Volts before you begin wiring.
- For more information, see *Identifying Connections and Selecting Proper Input Voltage* on page 24.

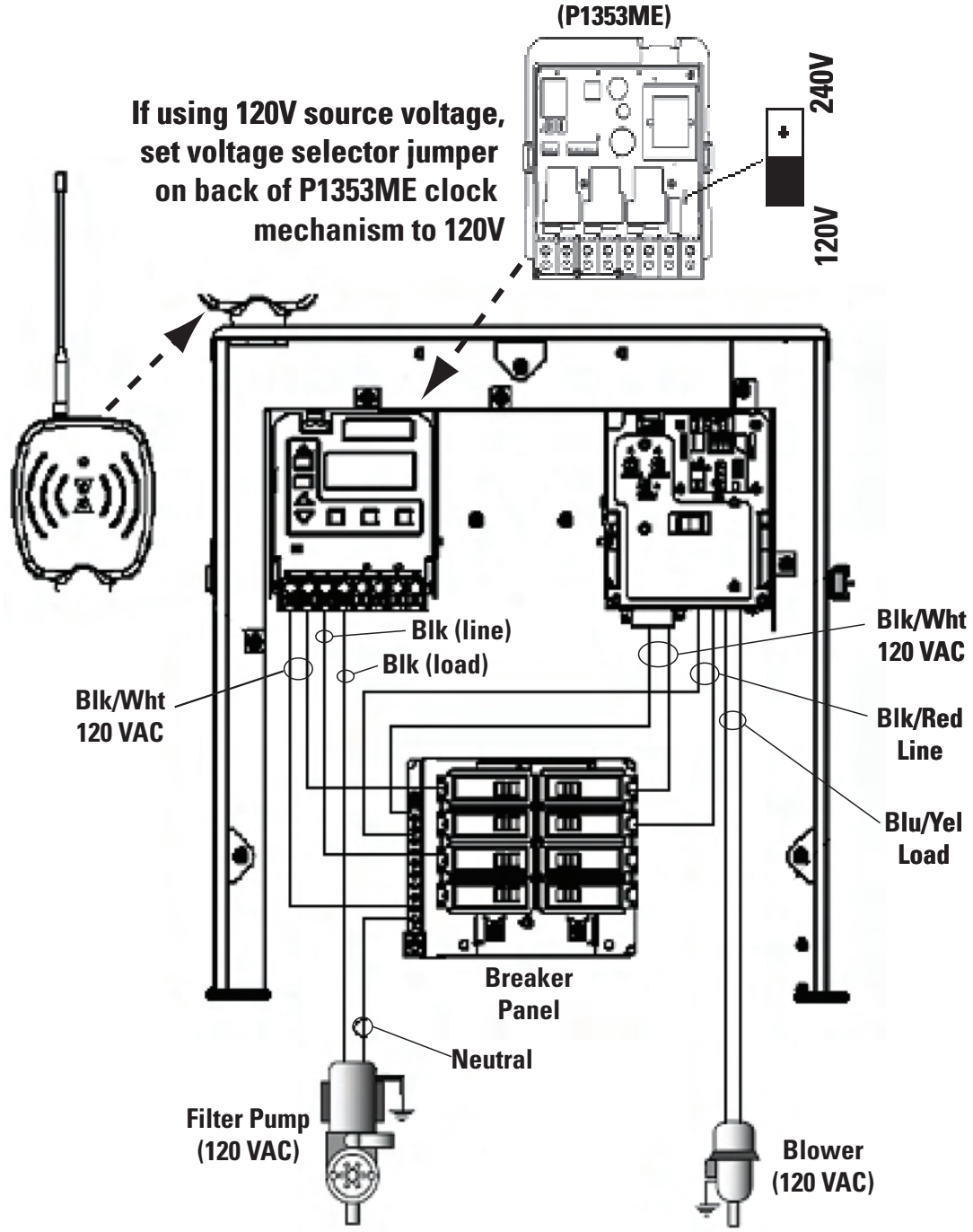

Figure 3-4

If Wiring 240-Volt Loads:

- For safety purposes, the factory default setting for the source voltage of a *P1353ME* mechanism is for 240 Volts.
- The Source Voltage Selection Jumper on the back of the Three-Circuit Clock mechanism *(P1353ME)* will already be correctly set, ready for you to begin wiring.
- For more information, see *Identifying Connections and Selecting Proper Input Voltage* on page 24.

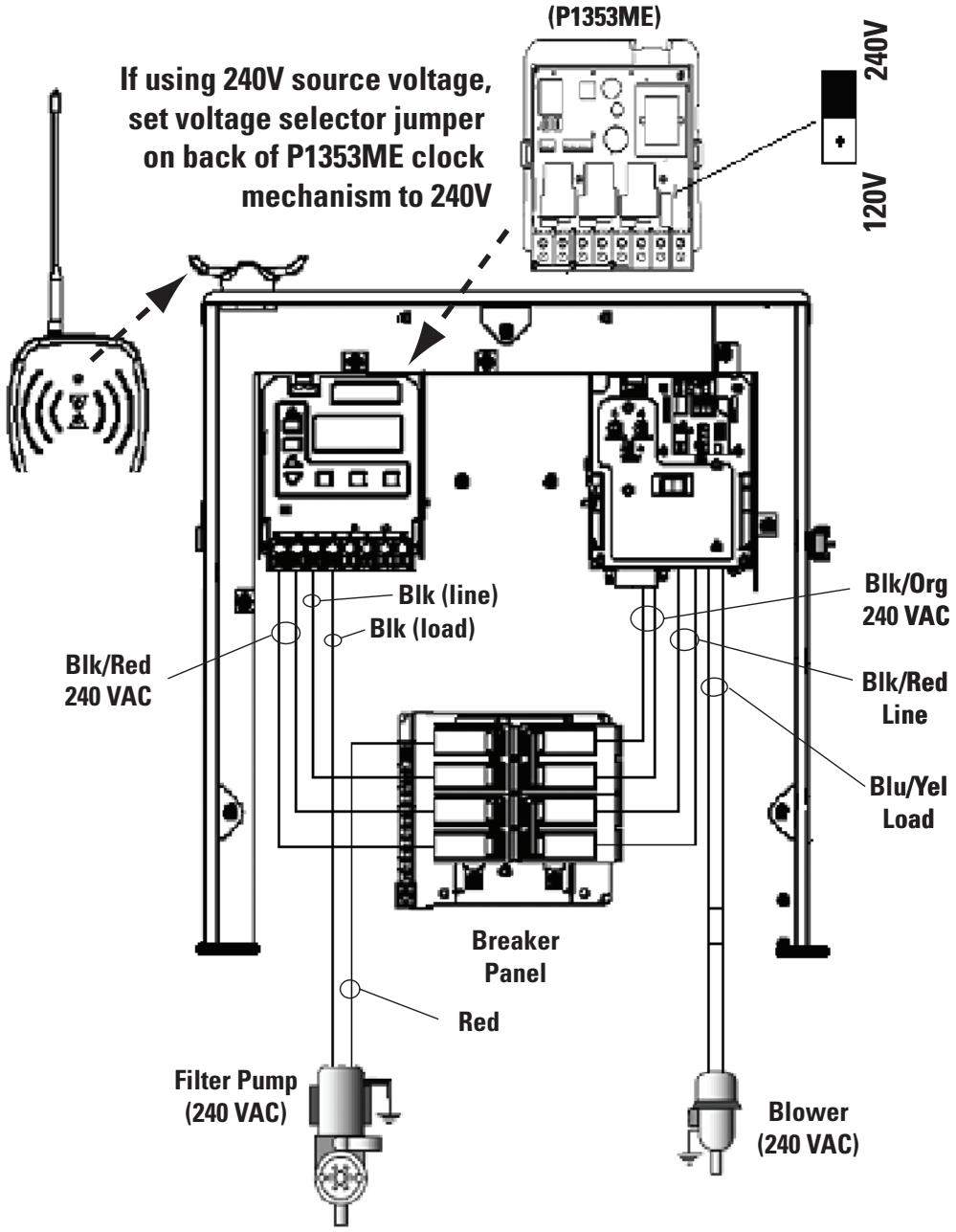

Figure 3-5

Copyright © 2006 Intermatic, Inc.

If Wiring Combination 120- and 240-Volt Loads:

- For combination 120- and 240-Volt loads, change the factory default setting of the Source Voltage Selection Jumper on the back of the Three-Circuit Clock mechanism *(P1353ME)* from its factory default setting to 120 Volts.
- For more information, see *Identifying Connections and Selecting Proper Input Voltage* on page 24.

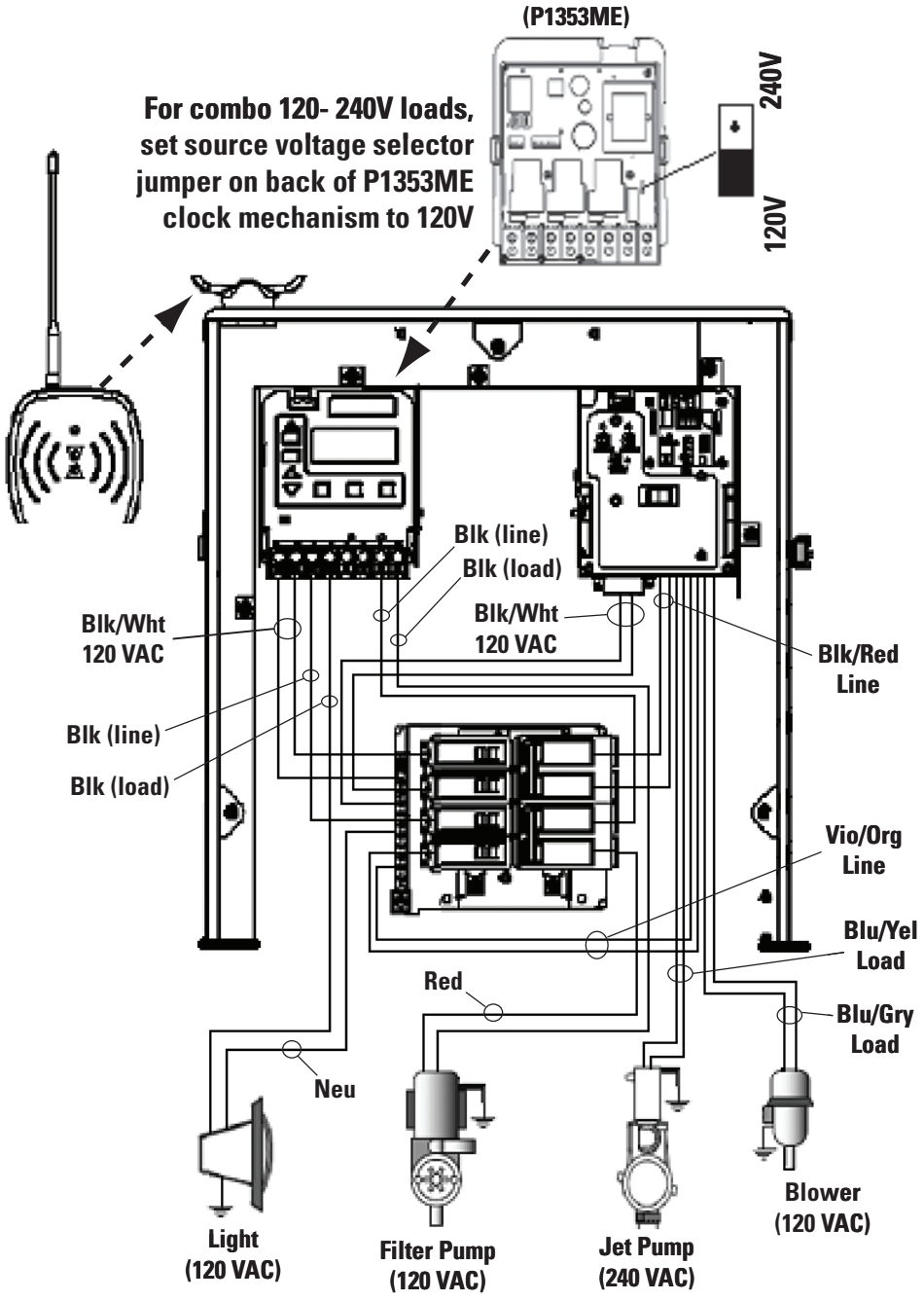

Figure 3-6

Wiring Underwater Lights

CAUTION: A Ground Fault Circuit Interrupter (GFCI) must be provided for high voltage pool/spa lights. Do not use a GFCI circuit breaker.

High-Voltage Underwater Lights

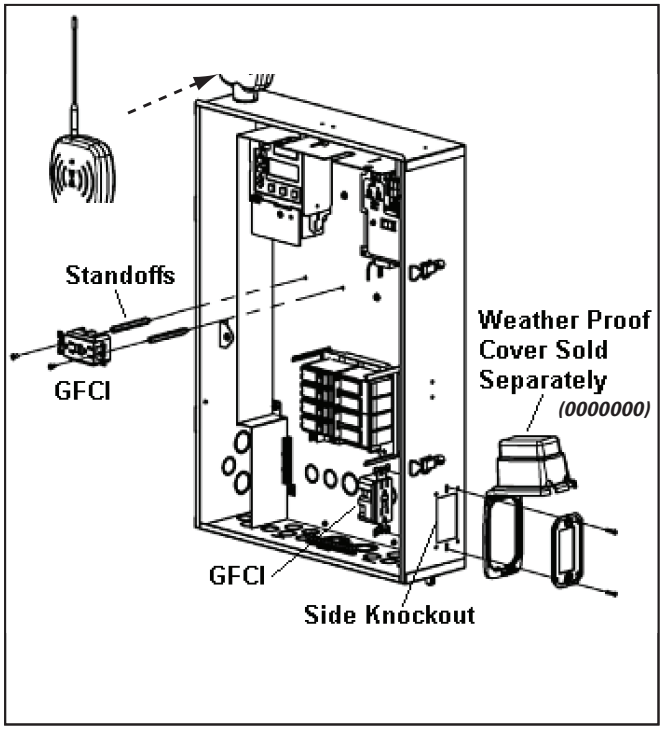

Figure 3-7

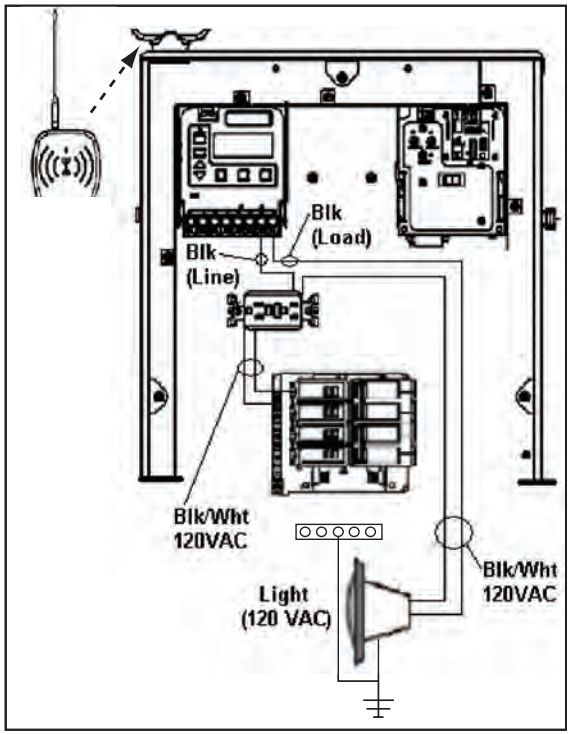

Figure 3-8

The I-Wave Control Center comes equipped with two décor knockouts on the dead front and one side knockout for installation of GFCI receptacles. (See Figure 3-7).

NOTE: If using the décor knockouts to install a GFCI, you must use the standoffs provided with the Control Center to mount your GFCI.

1. Install a GFCI receptacle and connect the neutral and hot wire, from the circuit breaker, to the LINE side of the GFCI. (See Figure 3-8).
2. Connect the neutral (white wire) to the GFCI.
3. Connect the hot (black wire) as follows:
   a. To the LOAD side of clock,
   b. Then out the LINE side of the clock to the LOAD side of the GFCI. (See Figure 3-8.)
4. Connect the ground (green wire) from the light to the grounding bar inside the Control Center.

Copyright © 2006 Intermatic, Inc.

Low-Voltage Underwater Lights

CAUTION: Your I-Wave Control Center is equipped with a Low Voltage Raceway. <u>You must use this raceway for all low voltage wiring</u>, including the 12 Volt wires from the transformer. You cannot mix high and low voltages in the high voltage compartment.

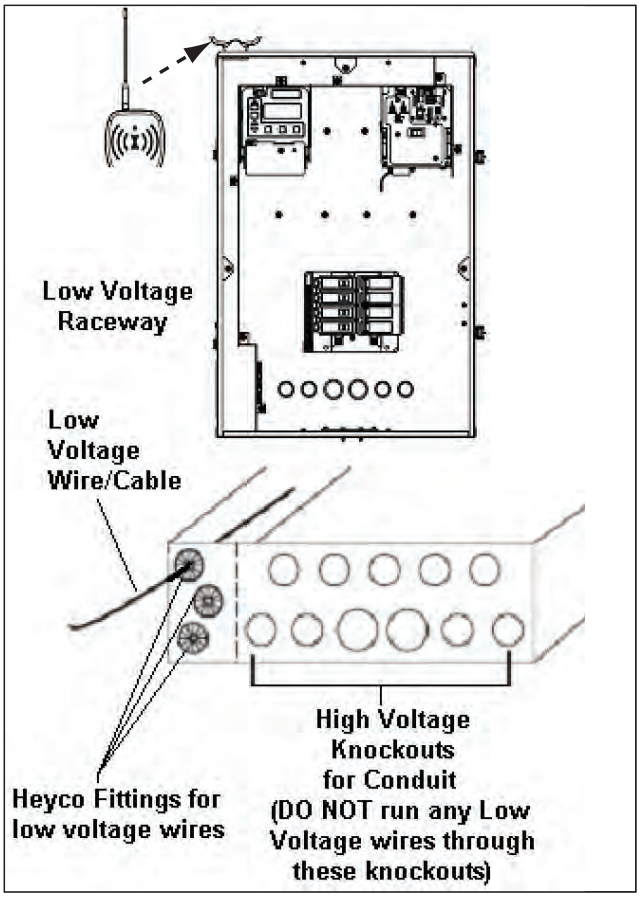

Figure 3-9

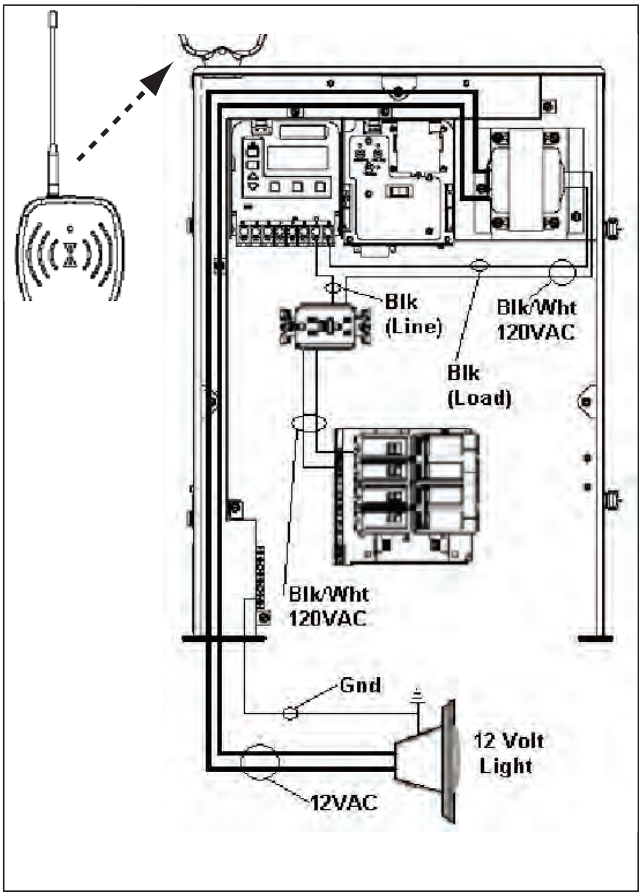

Figure 3-10

NOTE: If you require a low voltage transformer, you should order system model *PE45343RCT1* (with a 100 watt transformer) or *PE45343RCT3* (with a 300-watt transformer). Alternatively, you can order a 300-watt *PA116* or 100-watt *PA117* 12V transformer kit to mount in the standard system model *PE45343RC. (*See Figure 3-9.)

1. If required by local code, install a GFCI receptacle and connect the neutral and hot wire, from the circuit breaker, to the LINE side of the GFCI. (See Figure 3-10.)
2. Connect the lite to the secondary side of the transformer.
3. Connect the neutral side of the transformer to the load side of the GFCI.
4. Connect the hot as follows:
   - **a.** To the LOAD side of clock,
   - **b.** Then out the LINE side of the clock to the LOAD side of the GFCI. (See Figure 3-10.)
5. Connect the ground (green wire) from the light to the grounding bar inside the Control Center.

Low-Voltage Wiring

CAUTION: Your I-Wave Control Center is equipped with a Low Voltage Raceway. You must use this raceway for all low voltage wiring, including the 12 Volt wires from the transformer. You cannot mix high and low voltages in the high voltage compartment.

Water Temperature Sensor

The I-Wave Control System comes equipped with a Water Temperature Sensor. This sensor is needed to monitor and maintain both the pool and spa water temperature depending on the position of the diverter valves. It needs to be installed in order for the thermostat control to work. Power needs to be disconnected when connecting the temp sensor. Only an Intermatic Sensor will work with this controller. Follow the directions below to install and mount your water temperature sensor. Refer to page 43 For programming instructions.

1. Drill a 3/8″ hole in the pipe between the filter pump and filter and install the Water Temperature Sensor with hose clamp (not provided). Ensure the O-ring is in place.
2. Run the wire to the Control Center, through the low voltage raceway. Connect both wires to the Panel Mount Receiver. (See Figure 3-11.)

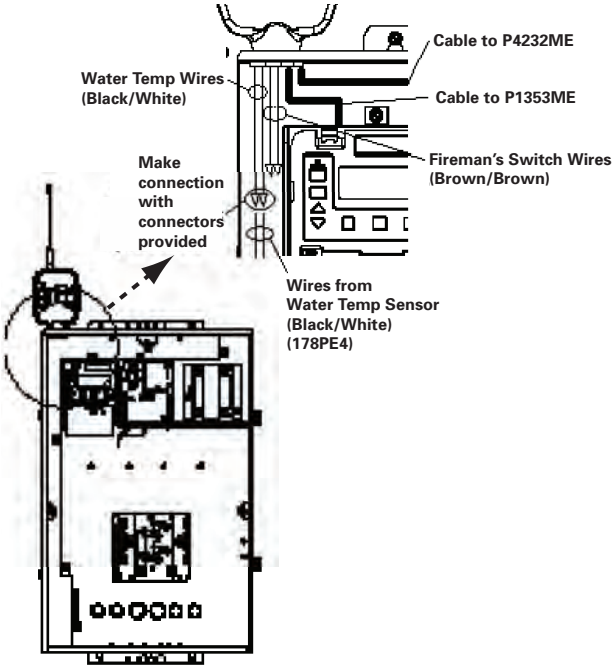

Figure 3-11

Freeze (Air Temperature) Sensor

The I-Wave Control System uses an optional Air Temperature Sensor *(178PA28A)* for measuring air temperature and implementing the Freeze Protection Circuit—necessary for the freeze protection circuit and programming to work. Power must be disconnected when connecting the freeze sensor. Only an Intermatic Sensor will work with this controller. Refer to page 34 for programming information.

1. Install the Air Temperature Sensor outside the Control Center, preferably onto a piece of conduit at or near your equipment pad. Use the clip provided with the sensor. Do not install in direct sunlight or around motors or other heat sources.
2. Run the wire to the Control Center through the low voltage raceway. Connect Air Sensor directly to the back of the three-circuit clock mechanism. (See Figure 3-12.)

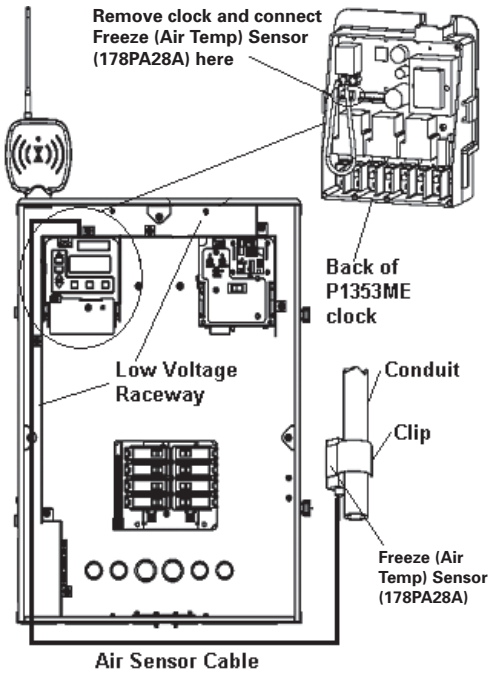

Figure 3-12

Copyright © 2006 Intermatic, Inc.

Motorized Valve Actuator Connection and Synchronizing

The I-Wave Control System is capable of controlling up to three Motorized Valve Actuators. Two Intermatic Motorized Valve Actuators *(PE24VA)* are included with your I-Wave system. Contact Intermatic Customer Service to order additional actuators.

The actuators must be installed to automatically rotate your valves between pool and spa plumbing. Power must be disconnected when connecting the actuator connectors to your I-Wave Control Center. Refer to the directions below prior to installing your PE24VA actuators. Refer to Figure 3-13 for detail.

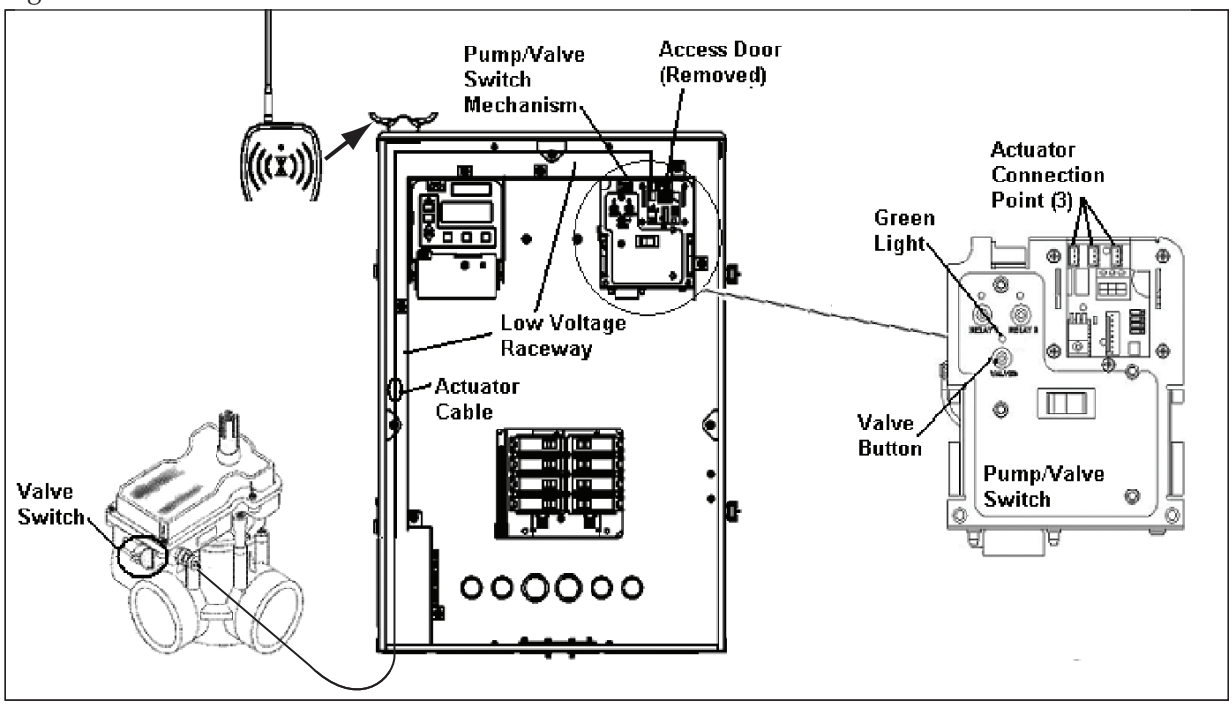

Figure 3-13

1. Remove power from the I-Wave control center.
2. Attach the valve actuators *(PE24VA)* to the water valves. (See instructions included.)
3. Run the actuator cable to the Control Center, and through the low voltage raceway.
4. Remove the access door to the Pump/Valve Switch mechanism.
5. Insert the three-pin connector of the motorized valve actuator to any of the three available connectors on the Pump/Valve Switch mechanism circuit board.
6. Apply power to the I-Wave Control Center and synchronize the actuators as follows:
   - **a.** Use the Valve button located on your Pump/Valve switch to illuminate the green light above the Valve switch. This indicates that the switch is in SPA mode.
   - **b.** Use the switch located on your motorized valve actuator to ensure the valves are in the SPA position.
   - **c.** If either of the Actuators is positioned backwards, flip the switch on the back to reverse position.
   - **d.** Verify that the Actuators are correctly synchronized with your installation.

Heater Fireman Switch Connection

The I-Wave Control System is capable of controlling most heaters or heat pumps, using thermostatic circuitry of 24 VAC or less, in the market today. Locate your heater in the following pages and follow the instructions for proper installation with your I-Wave Control Center.

Connection to the Three-Circuit Clock

Connect the Heater Fireman switch to the Intermatic Fireman Switch wires (tagged), located in the low-voltage raceway of the Intermatic panel. (See Figure 3-14.)

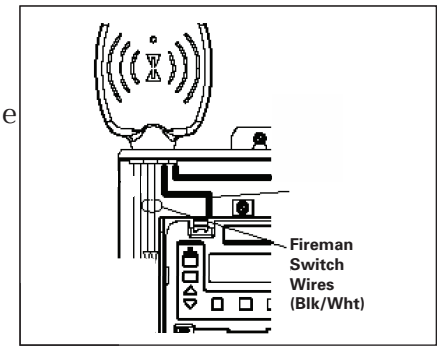

Figure 3-14

Connection for Teledyne Laars Heater

1. Connect two #14 gauge wires, designed for use in hot environments, to the two black wires, marked heater connection, on the panel mount receiver.
2. Connect the other ends of the #14 gauge wires from Step 1 to the Fireman's Switch terminal bar in place of the factory installed wire loop.
3. Do not disconnect high limit or pressure switches.
4. Turn the heater thermostat(s) to maximum setting.
5. Turn the heater switch to the ON position. For dual thermostat heaters turn switch to Spa position.

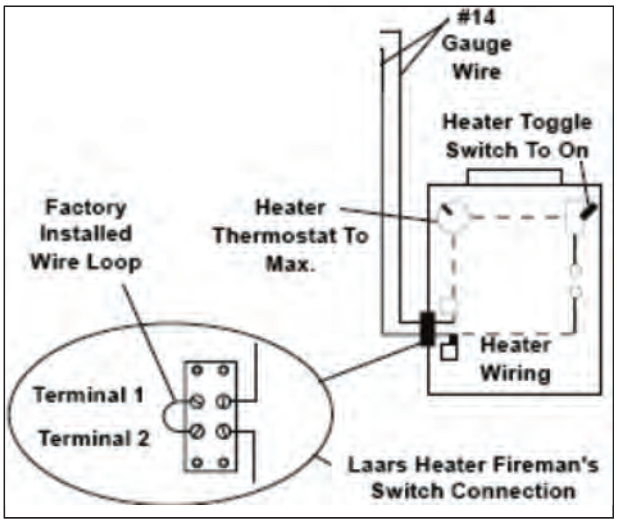

Figure 3-15

Connection for Raypak Heaters

The following connection procedure is for the two wire-one function configuration Raypak heater.

1. Connect two #14 gauge wires, designed for use in hot environments, to the two black wires on the panel mount receiver.
2. Connect one end of either #14 gauge wires from Step 1 to both the orange/black and black/orange wires on the Raypak heater.
3. Connect the remaining #14 gauge wire from Step 1 to the yellow/black wire on the Raypak heater.

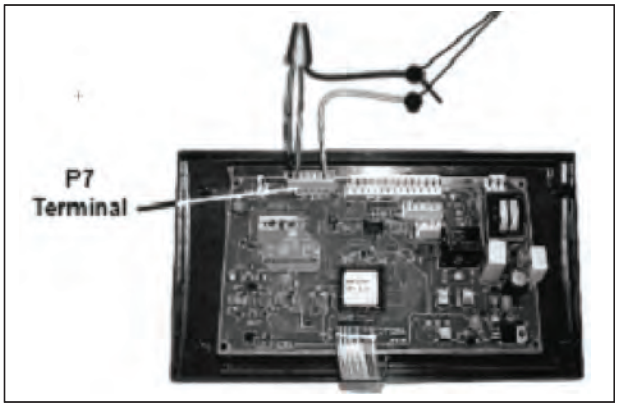

Figure 3-16

Copyright © 2006 Intermatic, Inc.

Connection for Hayward Heaters

1. Remove heater service door on your Hayward Heater.
2. Remove factory-installed wire connector between two (2) red wires labeled “CONNECTION FOR FIELD INSTALLED CONTROL SWITCH.” (See Figure 3-17.)
3. Connect two #14 gauge wires, designed for use in hot environments, to the two red wires. (See Figure 3-18.)
4. Wire the other end to the two black wires, marked heater connection, on the panel mount receiver in your I-Wave Control Center.
5. Do not disconnect high limit or pressure switches.
6. Turn the heater thermostat(s) to maximum setting.
7. Turn the thermostat selector switch to the ON, HIGH, or SPA position.

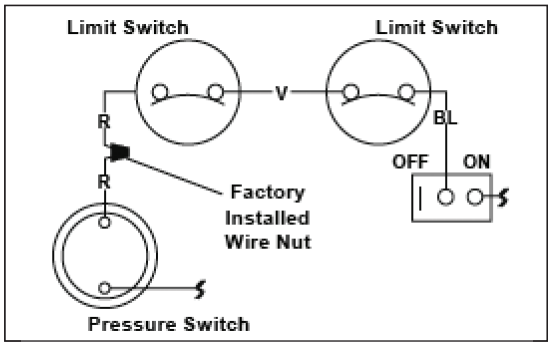

Figure 3-17 — Wiring Before Modification

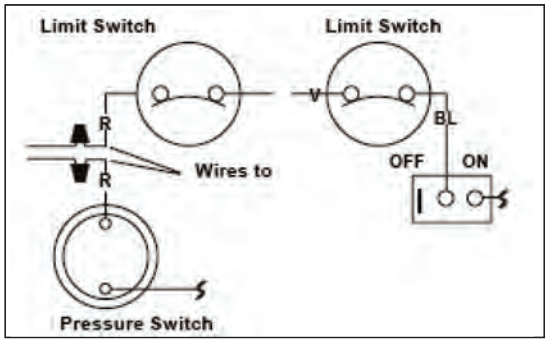

Figure 3-18 — Wiring with [what??]

Connection for Pentair Heater

1. Remove heater service door on your Pentair Heater.
2. Separate the black wires (common) from each other. (See Figure 3-19.)
3. Connect two #14 gauge wires, designed for use in hot environments, to the two black wires, marked heater connection, on the panel mount receiver in the I-Wave Control Center and attach the other end to the two black wires on the heater. (See Figure 3-20.)
4. Do not disconnect high limit or pressure switches.
5. Turn the heater thermostat(s) to maximum setting.
6. Turn the heater toggle switch on.

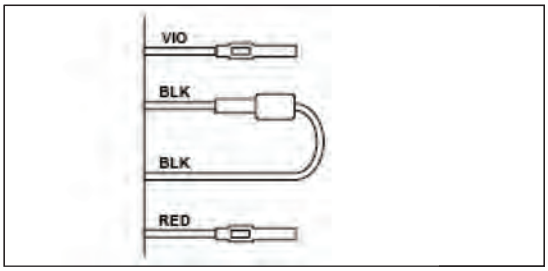

Figure 3-19 — Wiring Before Modification

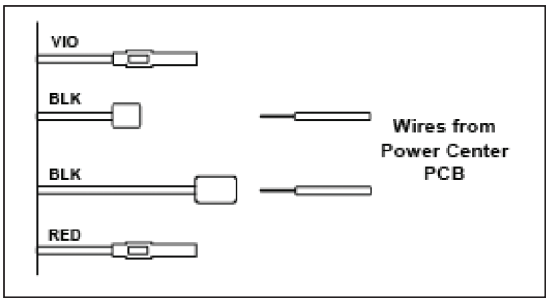

Figure 3-20 — Wiring with AquaLink RS

Connection for Sta-Rite Heaters

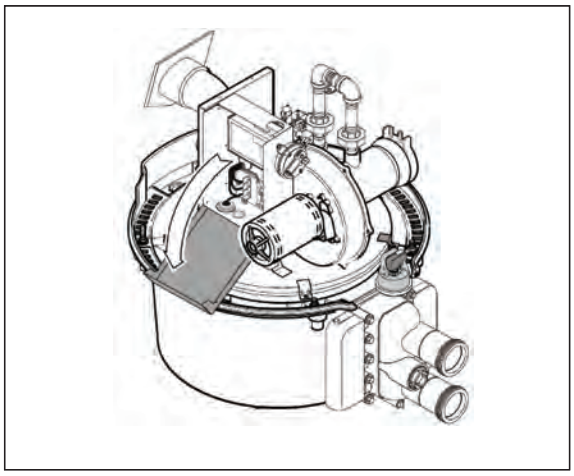

Figure 3-21

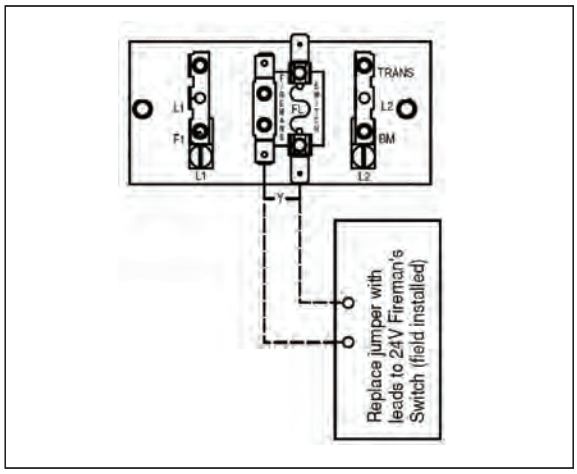

Figure 3-22

1. Turn off power to heater at main circuit breaker panel.
2. Unbolt and remove the upper jacket halves (Refer to heater owners manual).
3. Open control box cover. (See Figure 3-21.)
4. Remove the factory-installed jumper between the Fireman's Switch terminals. (See Figure 3-22.)
5. Connect two #14 gauge wires, designed for use in hot environments, to the two black wires, marked heater connection, on the panel mount receiver in the I-Wave Control Center and attach the other end to the two spade terminals at the heater. You can also cut the yellow jumper wire and wire connect the black wires to each yellow wire. (See Figure 3-23.)
6. Route the wires out through the knockout on the bottom of the Control Box.
7. Do not disconnect high limit or pressure switches.
8. Turn the heater on and maximize the temperature setting.

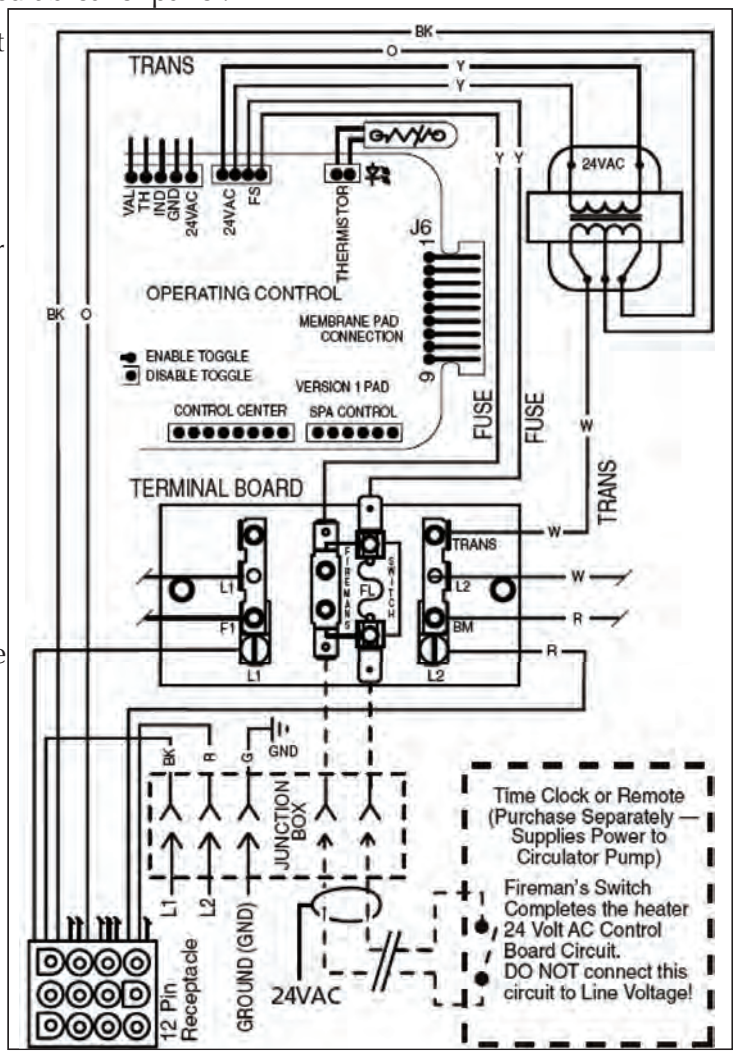

Figure 3-23

Copyright © 2006 Intermatic, Inc.

Section 4:

Programming the Three-Circuit Clock Mechanism

Overview of Three Circuit Clock Control Panel

The Intermatic Three-Circuit Clock Control Panel is easy to program and capable of automatically switching loads on three circuits according to a preset 24-hour daily schedule, and providing control over a variety of different applications. **Figure 4-1 shows the front of the mechanism.**

MODE BUTTON—With a small tool, press and hold this button down for 5 seconds. Using the Up and Down arrow keys, you can select the appropriate preprogrammed mode that matches your particular pool or spa equipment pad configuration. Hit the ENTER key when finished

PROGRAM BUTTON—used to enter programming mode and access different programming features

ENTER BUTTON—used to save programming changes to memory and exit programming mode.

ARROW BUTTONS—used to increase or decrease programming parameters when in programming mode.

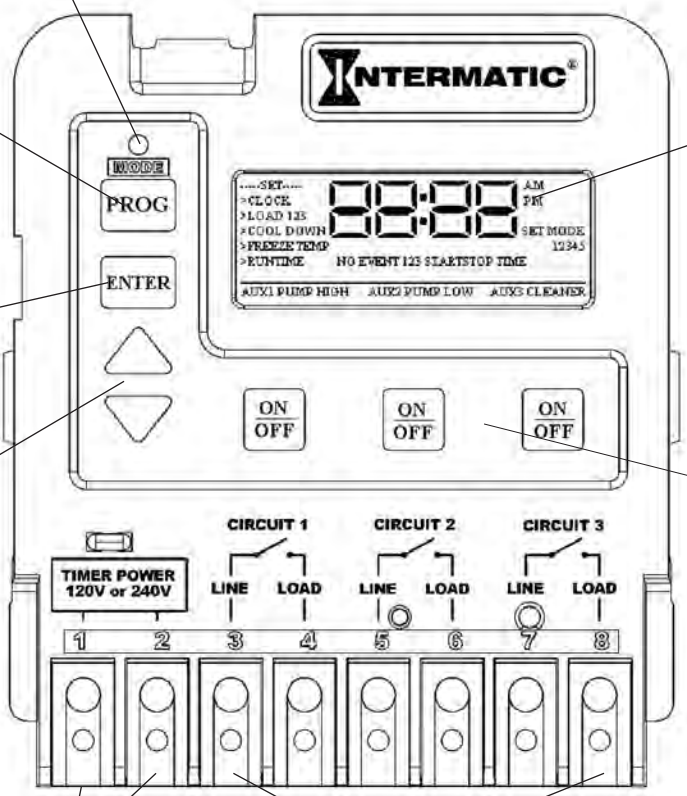

DISPLAY—Indicates time of day and programming settings during programming mode.

ON/OFF BUTTONS—Turn on and off circuit functions.

Figure 4-1

TIMER POWER—the two terminals where you wire 120V or 240V to power the multipurpose control. Be sure the jumper on the back, matches the source voltage. See page 23

CIRCUITS 1, 2, & 3—These six terminals are where you wire the equipment source voltage and equipment load lines. You can have different source voltages for each circuit, depending on your equipment requirements

NOTE: The three-circuit clock breaks only <u>one leg</u> to the load. Wire the other leg directly from the line to the load. (Refer to the illustration on the clock, above the terminals.)

Identifying Connections and Selecting Proper Input Voltage

Figure 4-2 below shows the reverse side of the Three-Circuit Clock Control Panel. Detailed connection information is provided below the diagram.

CAUTION: If the Source Voltage Selector Jumper is in the wrong position, the F1 fuse will blow and you may damage the circuit board, voiding the warranty.

1. **Before making any connections: Set the Source Voltage Selector Jumper.** The factory default position for this jumper is the 240 Volt position.
2. If the input voltage for the clock is 120 Volts, change this jumper to the 120 Volt position.

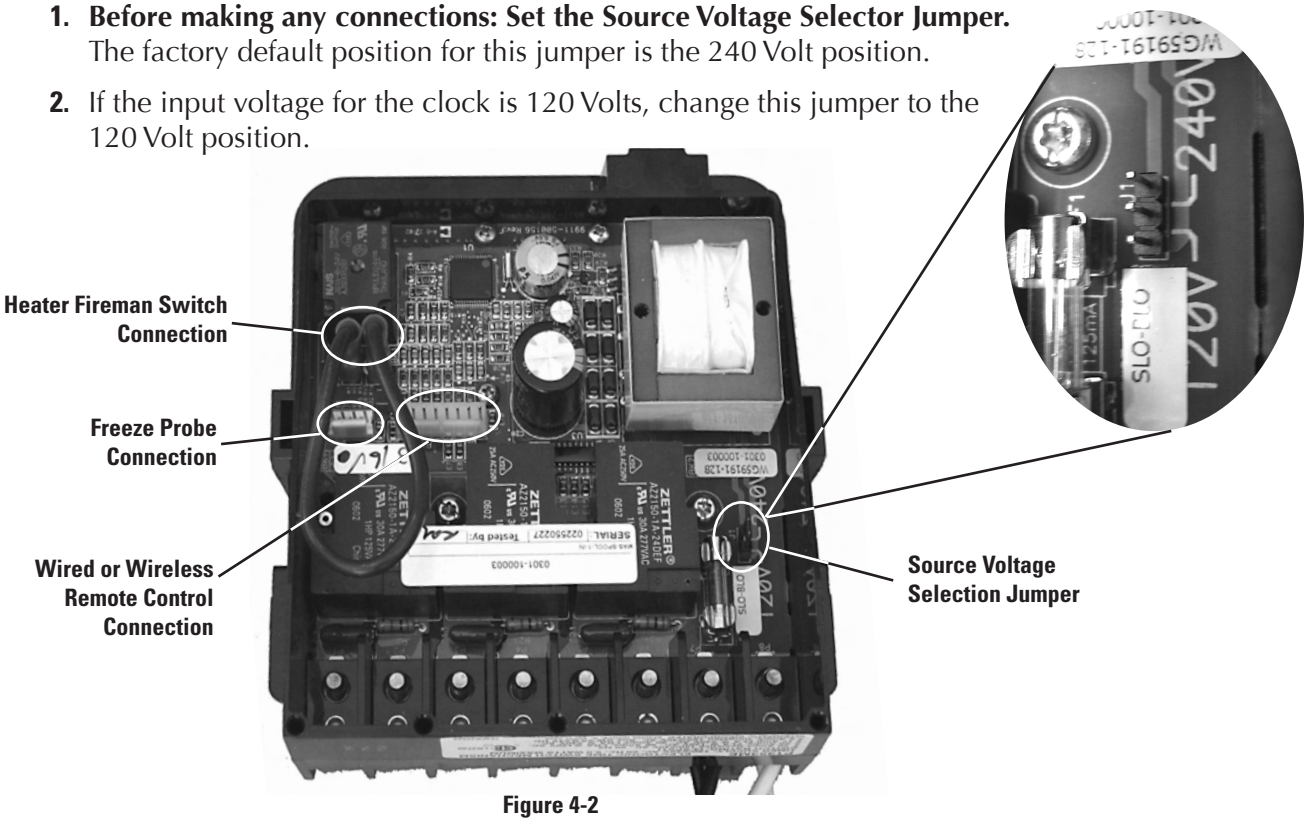

Figure 4-2

Connection Detail

- **Freeze Probe Connection** — For the Intermatic Freeze Sensor *(178PA0001A)*, which is necessary for the freeze protection circuit and programming to work. Disconnect power when connecting the freeze sensor. Only an Intermatic sensor can be used. Refer to page 34 for programming information.
- **Heater Firemen Switch Connection** — For the firemen switch wires that connect to the Pool/Spa heater. If installing with a Wireless Remote Control, use the two brown wires coming from the panel-mounted antenna to create the circuit between this switch and the heater. Connectors should be ¼" female spade connectors crimped to insulated-type wire. This connection is a simple SPST contact, and switches the supplied heater voltage. It does not supply voltage to the heater thermostat. In non-wireless installations, clip the "loop" supplied, then connect with wire nut connectors. Refer to page 33 for programming information.
- **Remote Control Connection** — For the Intermatic Remote Control *(133PE1484A)*, which allows you to remotely turn On or Off all three available circuits. It also has status lights that indicate when a load is On, Off or delayed. If using the Three-Button Wired Remote Control *(133PE1484A)*, it connects here as well.

Copyright © 2006 Intermatic, Inc.