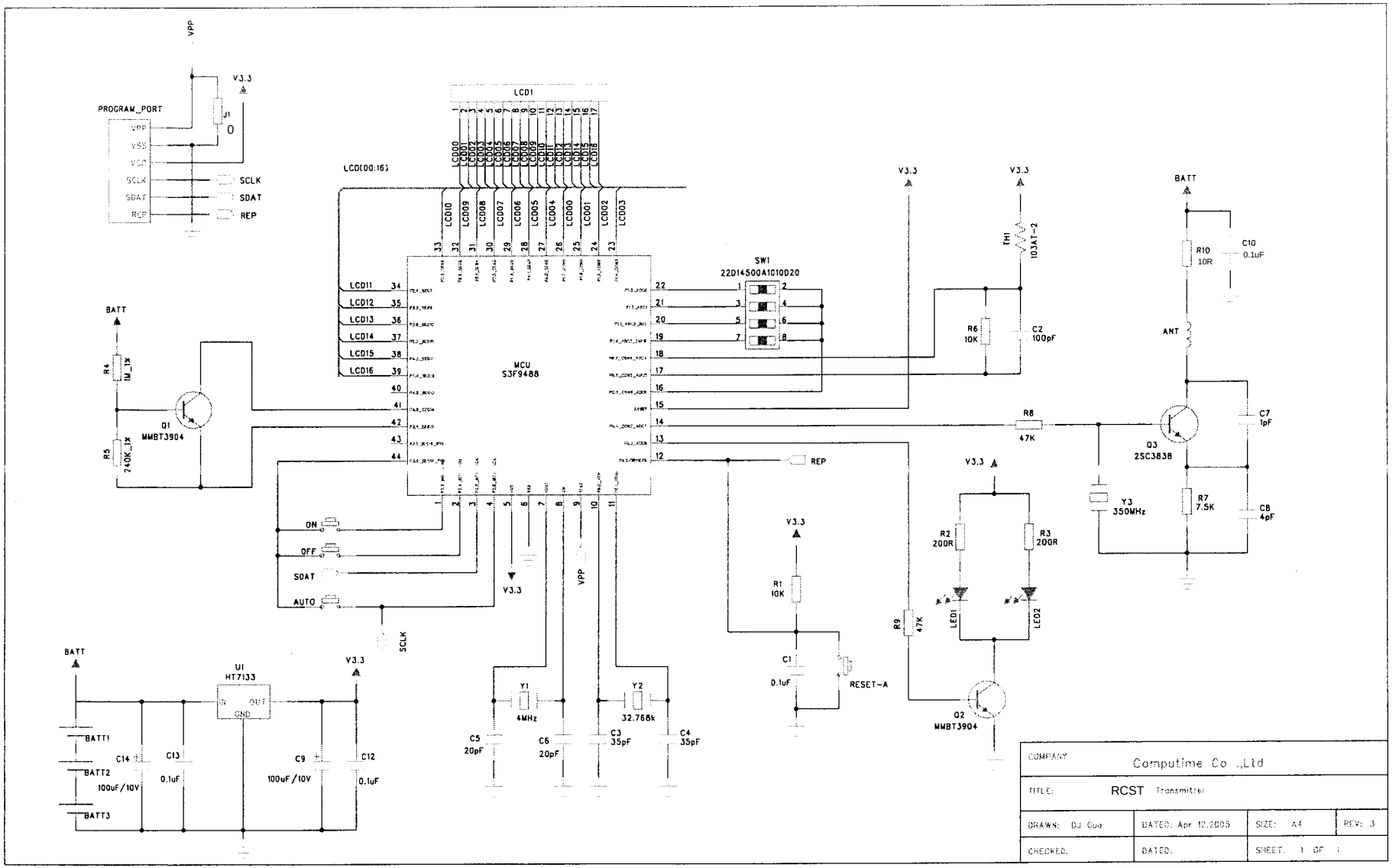
PROGRAM_PORT
VPP
VSS
VCC
SCLK
SDAT
REP
J1
0
V3.3
LCD1
LCD[00:16]
MCU
S3F9488
SW1
22D14500A1010D20
TH1
103AT-2
R6
10K
C2
100pF
BATT
R10
10R
C10
0.1uF
ANT
R8
47K
Q3
2SC3838
C7
1pF
C8
4pF
Y3
350MHz
R7
7.5K
R4
1M_1%
R5
240K_1%
Q1
MMBT3904
ON
OFF
SDAT
AUTO
SCLK
REP
R1
10K
C1
0.1uF
RESET-A
R2
200R
R3
200R
LED1
LED2
R9
47K
Q2
MMBT3904
U1
HT7133
IN
OUT
GND
BATT1
BATT2
BATT3
C14
100uF/10V
C13
0.1uF
C9
100uF/10V
C12
0.1uF
Y1
4MHz
Y2
32.768k
C5
20pF
C6
20pF
C3
35pF
C4
35pF
COMPANY
Computime Co.,Ltd
TITLE:
RCST Transmitter
DRAWN: DJ Guo
DATED: Apr 12.2005
SIZE: A4
REV: 3
CHECKED:
DATED:
SHEET: 1 OF 1

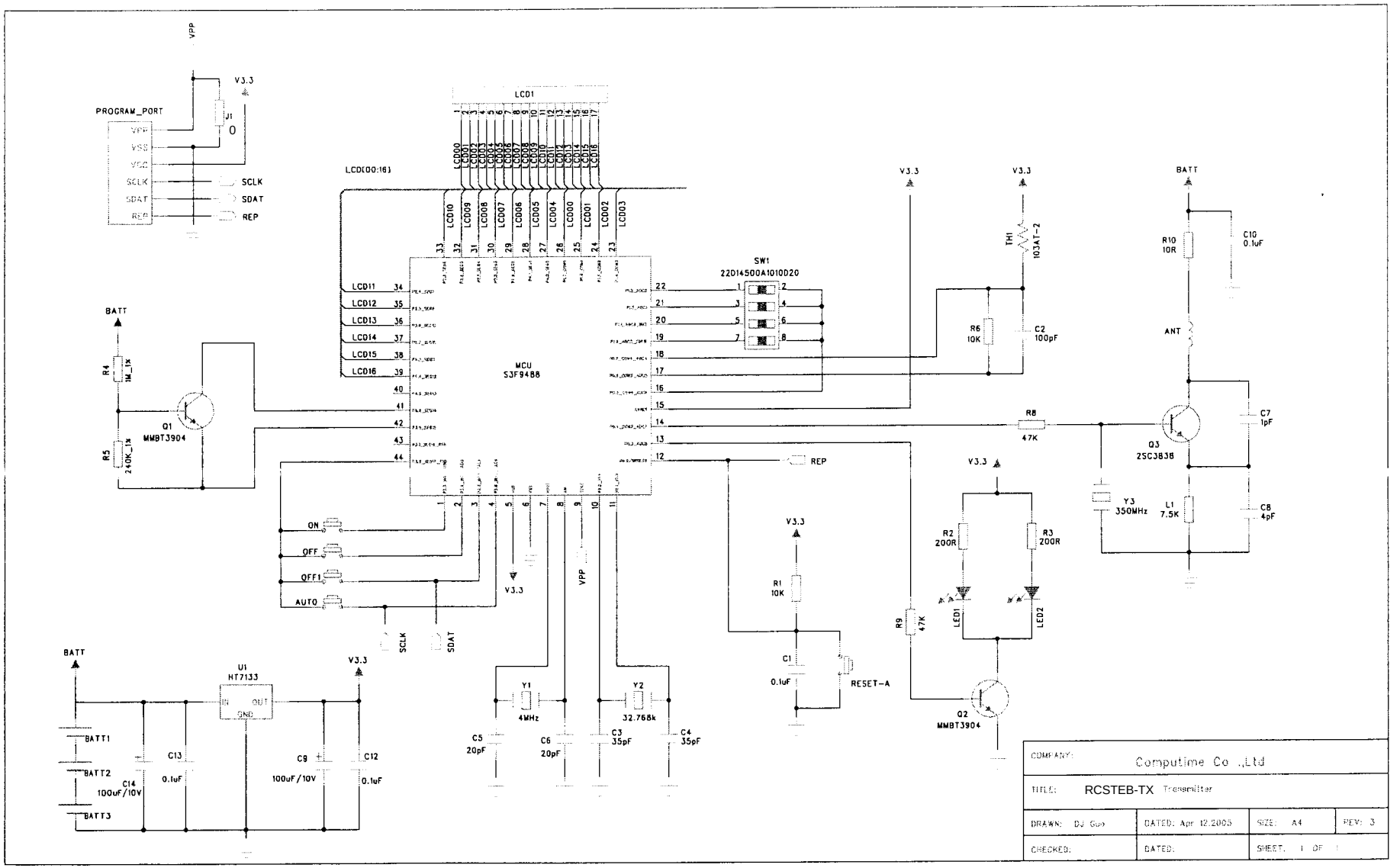
PROGRAM_PORT
VPP
VSS
VCC
SCLK
SDAT
REP
J1
0
V3.3
LCD1
LCD[00:16]
MCU
S3F9488
SW1
22014500A1010D20
TH1
103AT-2
R6
10K
C2
100pF
BATT
R10
10R
C10
0.1uF
ANT
R4
1M_1%
R5
240K_1%
Q1
MMBT3904
R8
47K
Q3
2SC3838
C7
1pF
C8
4pF
Y3
350MHz
L1
7.5K
ON
OFF
OFF1
AUTO
SCLK
SDAT
VPP
REP
R1
10K
C1
0.1uF
RESET-A
R2
200R
R3
200R
LED1
LED2
R9
47K
Q2
MMBT3904
U1
HT7133
IN
OUT
GND
BATT1
BATT2
BATT3
C14
100uF/10V
C13
0.1uF
C9
100uF/10V
C12
0.1uF
Y1
4MHz
Y2
32.768k
C5
20pF
C6
20pF
C3
35pF
C4
35pF
COMPANY: Computime Co.,Ltd
TITLE: RCSTEB-TX Transmitter
DRAWN: DJ Guo
DATED: Apr 12,2005
SIZE: A4
REV: 3
CHECKED:
DATED:
SHEET: 1 OF 1