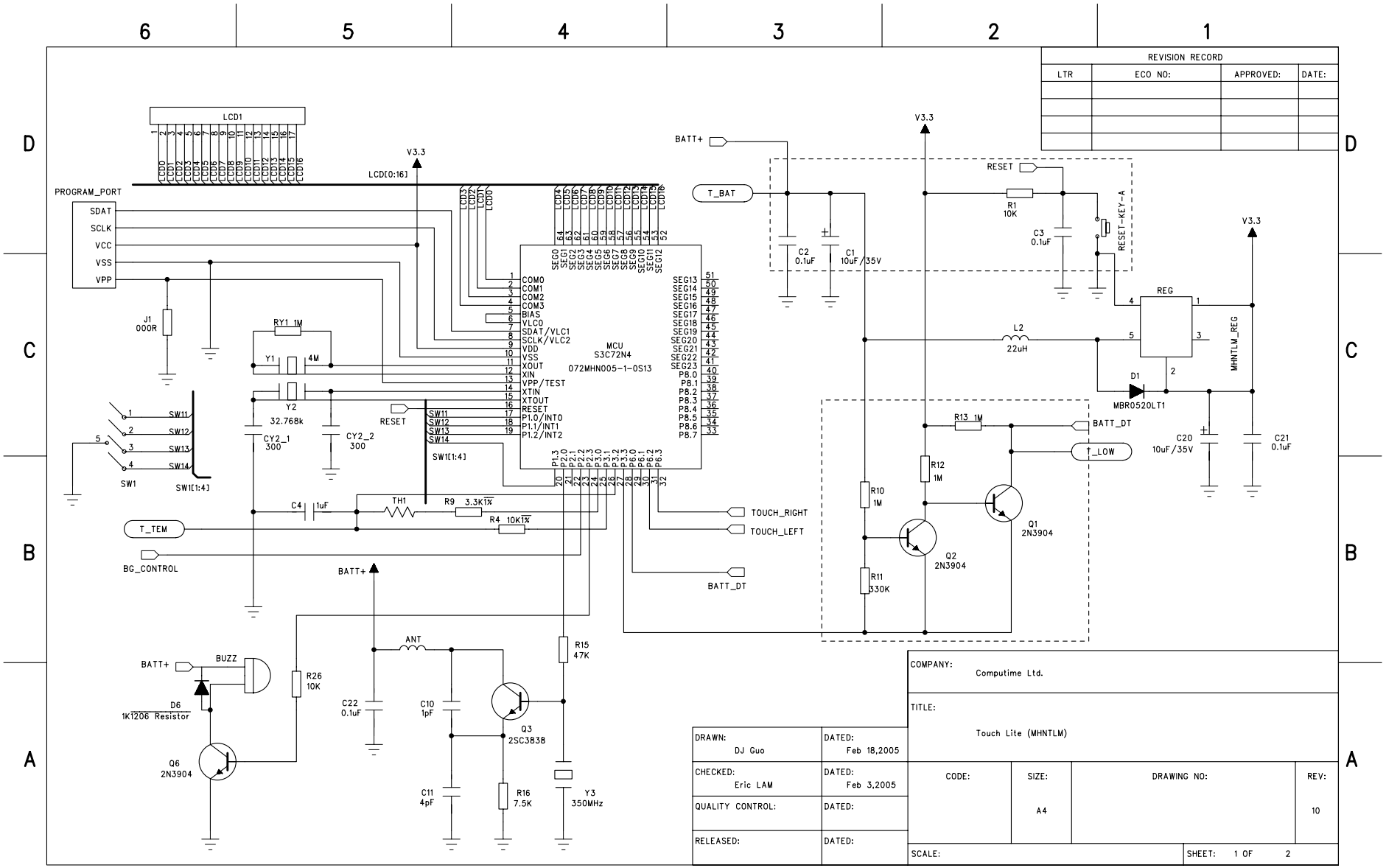

REVISION RECORD			
LTR	ECO NO:	APPROVED:	DATE:

DRAWN: DJ Guo	DATED: Feb 18,2005
CHECKED: Eric LAM	DATED: Feb 3,2005
QUALITY CONTROL:	DATED:
RELEASED:	DATED:

COMPANY: Computime Ltd.

TITLE: Touch Lite (MHNTLM)

CODE:	SIZE:	DRAWING NO:	REV:
	A4		10

SCALE: SHEET: 1 OF 2

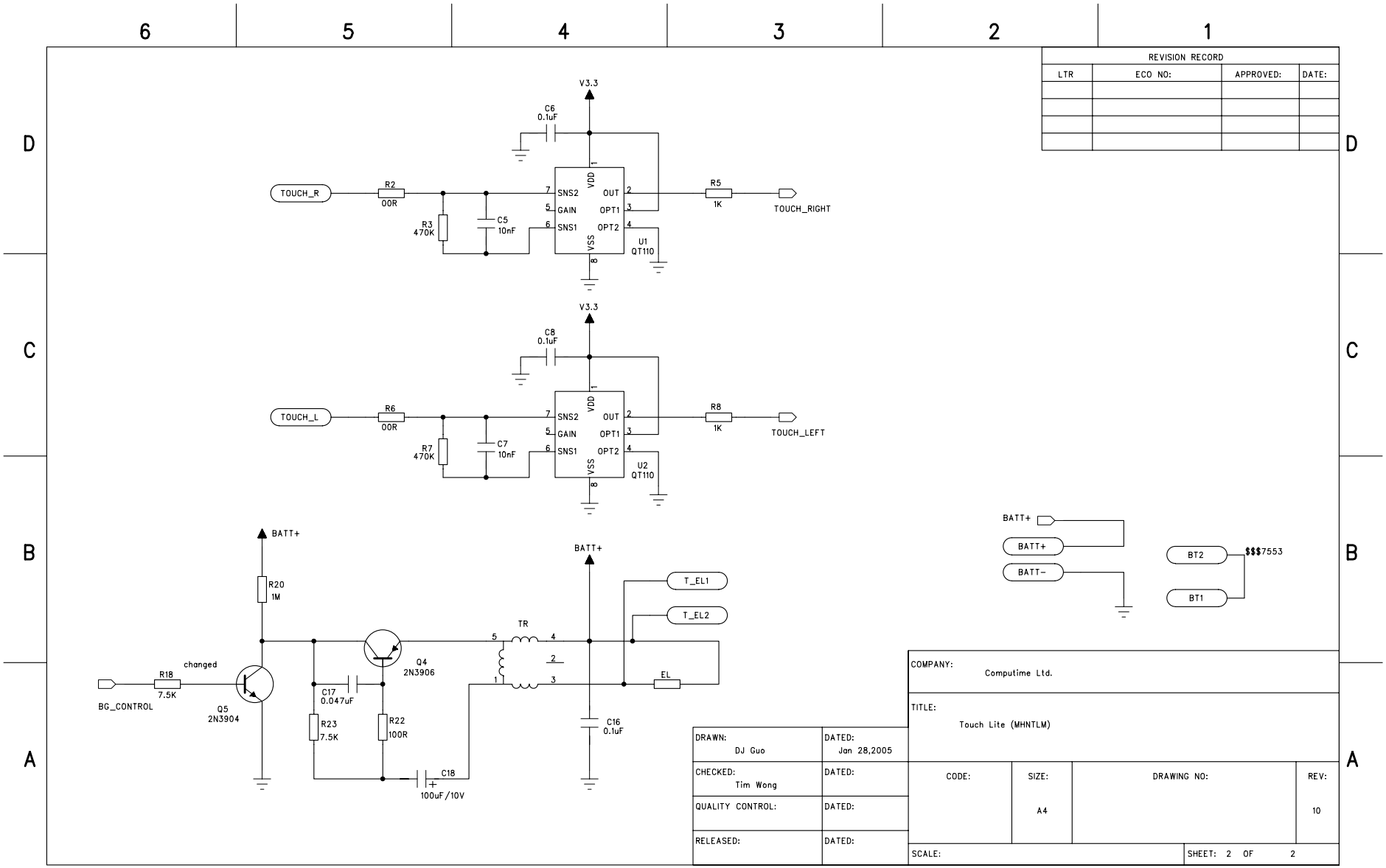
6
5
4
3
2
1
D
C
B
A
V3.3
C6
0.1uF
TOUCH_R
R2
00R
R3
470K
C5
10nF
SNS2
GAIN
SNS1
VDD
VSS
OUT
OPT1
OPT2
U1
QT110
R5
1K
TOUCH_RIGHT
V3.3
C8
0.1uF
TOUCH_L
R6
00R
R7
470K
C7
10nF
U2
QT110
R8
1K
TOUCH_LEFT
BATT+
R20
1M
changed
R18
7.5K
BG_CONTROL
Q5
2N3904
C17
0.047uF
R23
7.5K
R22
100R
Q4
2N3906
C18
100uF/10V
TR
BATT+
T_EL1
T_EL2
EL
C16
0.1uF
BATT+
BATT+
BATT-
BT2
BT1
$$$7553
REVISION RECORD
LTR
ECO NO:
APPROVED:
DATE:
COMPANY:
Computime Ltd.
TITLE:
Touch Lite (MHNTLM)
DRAWN:
DJ Guo
DATED:
Jan 28,2005
CHECKED:
Tim Wong
DATED:
QUALITY CONTROL:
DATED:
RELEASED:
DATED:
CODE:
SIZE:
A4
DRAWING NO:
REV:
10
SCALE:
SHEET: 2 OF 2