NOTE.
1.THE UNIT OF RESISTANCE ' OHM ' IS OMITTED (K-1000 OHMS AND M-1MEG OHMS)
2.ALL RESISTORS ARE ' 1/8 WATT , 5 % ' UNLESS OTHERWISE NOTED.
3.ALL CAPACITANCE RATTING ' 50V ' IS OMITTED UNLESS OTHERWISE NOTED.

REVISIONS				
PCN/ECN NO.	REV.	DESCRIPTION	DATE	DRAWN

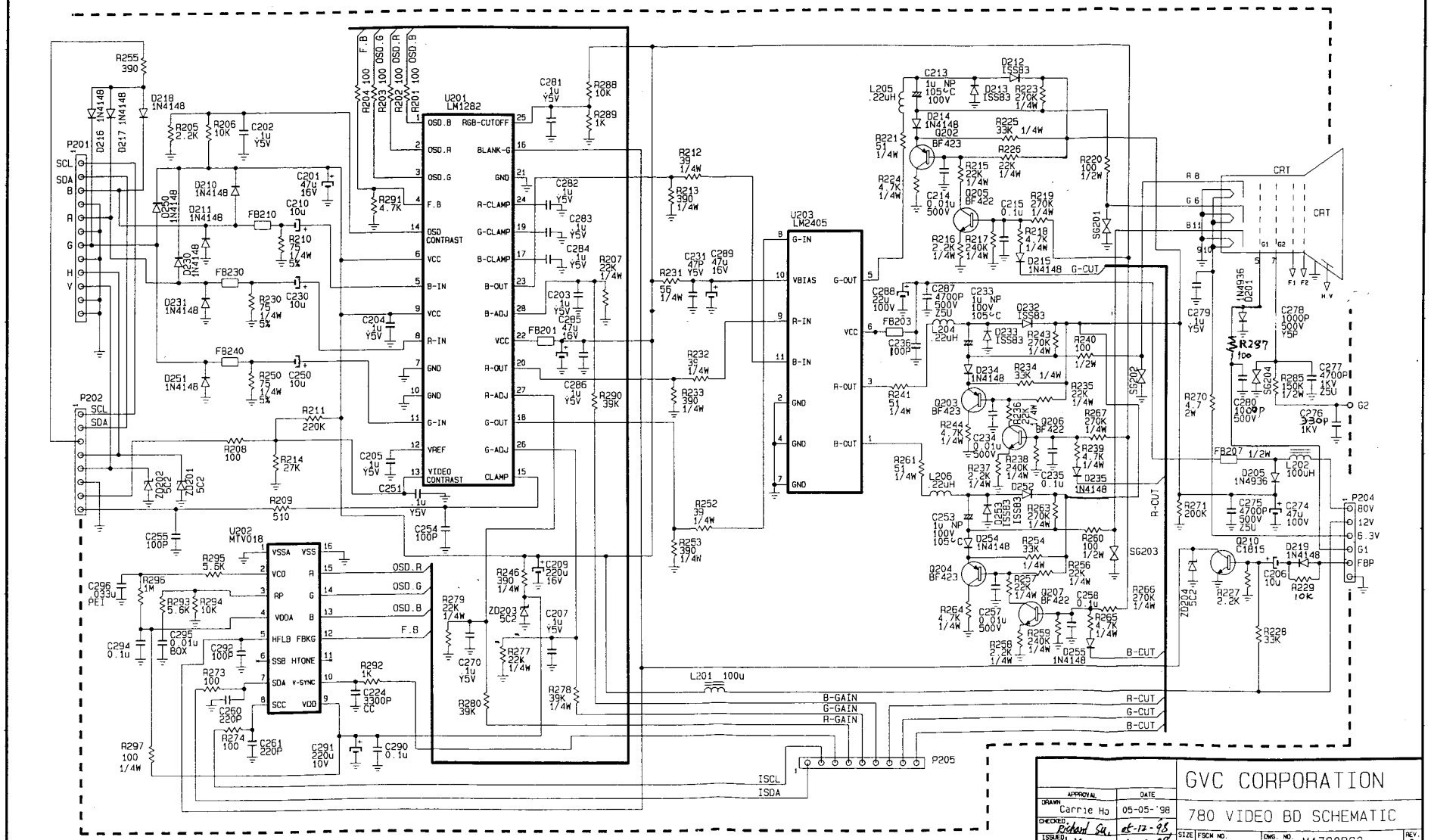

APPROVAL	DATE	GVC CORPORATION	
DRAWN Carrie Ho	05-05-'98	780 VIDEO BD SCHEMATIC	
CHECKED Richard Su	05-12-98		
ISSUED	05-12-98	SIZE A2 / FSCH NO. / DWG. NO. M1780BC2	REV. 2
DISCARD		PCAD FILE 1780C2.SCH	SHEET 1 OF 1

05-05-'98

FCC ID: DK4780

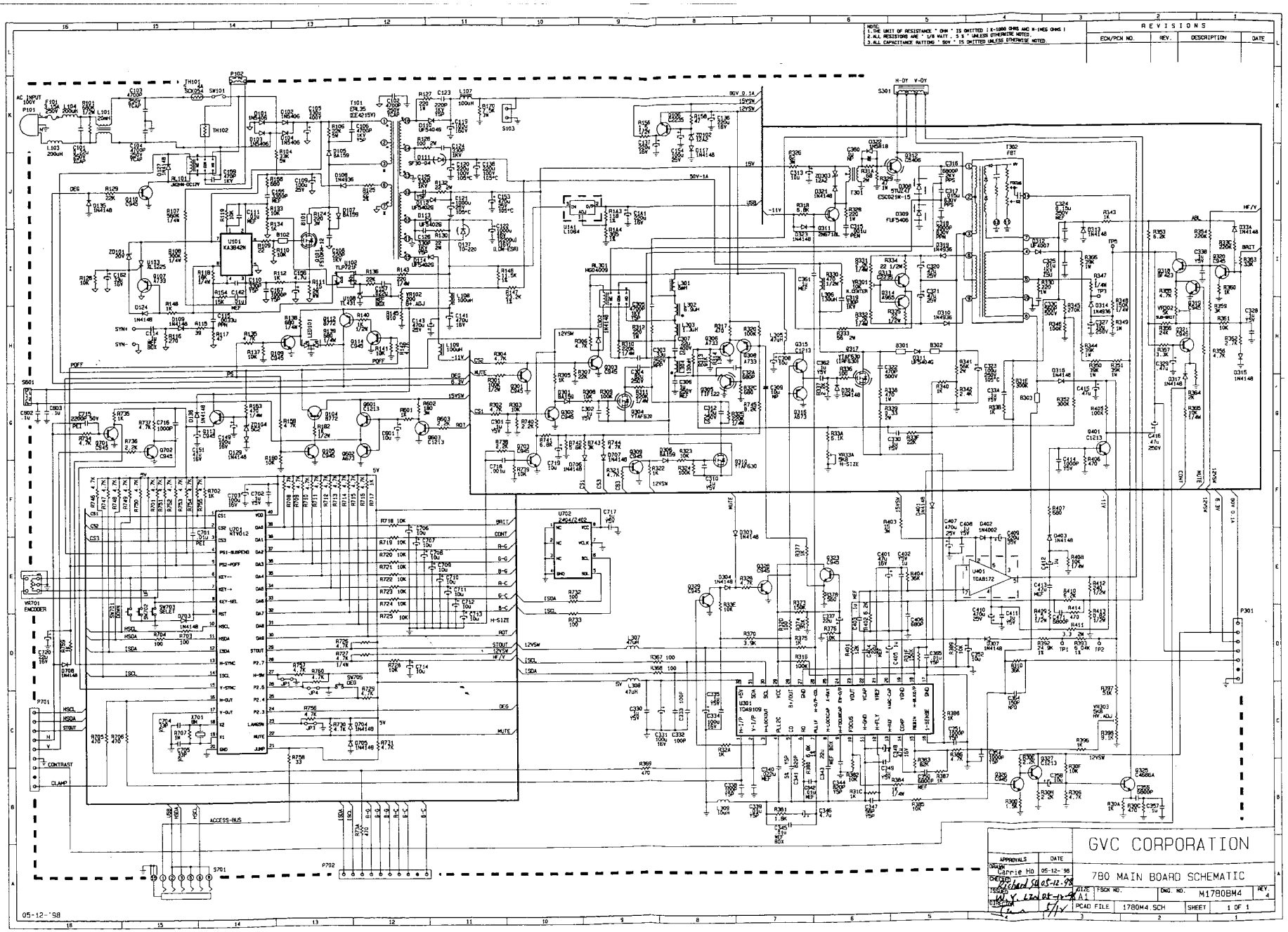

FCC ID = DK4780