OPERATING INSTRUCTIONS

AUDIO INTERFACE WITH USB AND BLUETOOTH

MW-41BT-AM

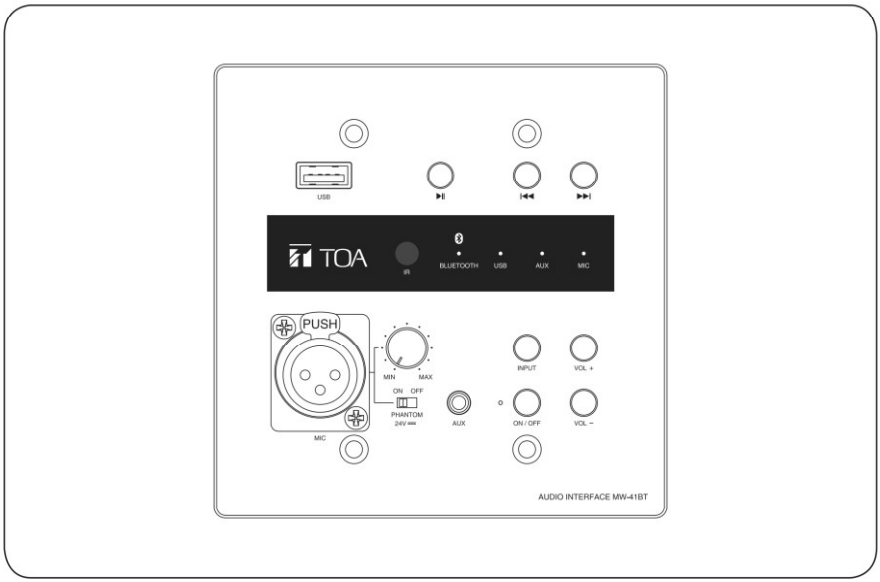

TABLE OF CONTENTS

1. IMPORTANT SAFETY INSTRUCTIONS 2
2. GENERAL DESCRIPTION 5
3. FEATURES 5
4. NOMENCLATURES AND FUNCTIONS 5
5. CONNECTIONS 7
6. INSTALLATION 7
7. DIMENSIONAL DIAGRAM 8
8. SPECIFICATIONS 8

Thank you for purchasing TOA's Audio Interface with USB and Bluetooth.
Please carefully follow the instructions in this manual to ensure long, trouble-free use of your equipment.

TOA Corporation

IMPORTANT SAFETY INSTRUCTIONS

- Read these instructions.
- Keep these instructions.
- Heed all warnings.
- Follow all instructions.
- Do not use this apparatus near water.
- Clean only with dry cloth.
- Do not block any ventilation openings. Install in accordance with the manufacturer's instructions.
- Do not install near any heat sources such as radiators, heat registers, stoves, or other apparatuses (including amplifiers) that produce heat.
- Protect the power cord from being walked on or pinched particularly at plugs, convenience receptacles, and the point where they exit from the apparatus.
- Only use attachments/accessories specified by the manufacturer.
- Unplug this apparatus during lightning storms or when unused for long periods of time.
- Refer all servicing to qualified service personnel. Servicing is required when the apparatus has been damaged in any way, such as power-supply cord or plug is damaged, liquid has been spilled or objects have fallen into the apparatus, the apparatus has been exposed to rain or moisture, does not operate normally, or has been dropped.

INSTRUCTIONS ESSENTIELLES POUR LA SÉCURITÉ

- Lire ces instructions.
- Conserver ces instructions pour référence ultérieure.
- Respecter tous les avertissements.
- Suivre toutes les instructions.
- Ne pas utiliser cet appareil à proximité d'eau.
- Nettoyer uniquement à l'aide d'un chiffon sec.
- Ne pas obstruer les orifices de ventilation. Installer conformément aux instructions du fabricant.
- Ne pas installer à proximité de sources de chaleur telles que des radiateurs, des registres thermiques, des chaudières ou d'autres appareils (notamment des amplificateurs) produisant de la chaleur.
- Protéger le cordon d'alimentation pour éviter qu'il ne soit piétiné ou pincé, notamment au niveau des fiches, des prises de courant ou de son point de sortie de l'appareil.
- Utiliser uniquement les accessoires spécifiés par le fabricant.
- Débrancher cet appareil pendant les orages ainsi que lorsqu'il reste inutilisé pendant une période prolongée.
- La maintenance de l'appareil doit être confiée à un technicien après-vente qualifié. Une maintenance s'avère nécessaire si l'appareil est endommagé (au niveau du cordon d'alimentation ou de la fiche), a été mouillé par un liquide, un objet est tombé à l'intérieur, s'il a été exposé à la pluie ou l'humidité, s'il ne fonctionne pas normalement ou s'il est tombé.

SAFETY PRECAUTIONS

- Before installation or use, be sure to carefully read all the instructions in this section for correct and safe operation.
- Be sure to follow all the precautionary instructions in this section, which contain important warnings and/or cautions regarding safety.
- After reading, keep this manual handy for future reference.

Safety Symbol and Message Conventions

Safety symbols and messages described below are used in this manual to prevent bodily injury and property damage which could result from mishandling. Before operating your product, read this manual first and understand the safety symbols and messages so you are thoroughly aware of the potential safety hazards.

The exclamation point within an equilateral triangle is intended to alert the user to the presence of important operation and maintenance (servicing) instruction in the literature accompanying the appliance.

Le point d'exclamation à l'intérieur d'un triangle équilatéral avertit l'utilisateur de l'existence d'instructions d'utilisation et d'entretien (réparation) dans la documentation fournie avec l'appareil.

WARNING Indicates a potentially hazardous situation which, if mishandled, could result in death or serious personal injury.

When Installing the Unit

- WARNING: Do not expose the unit to rain or an environment where it may be splashed by water or other liquids, as doing so may result in fire or electric shock.
- Use the unit only with the voltage specified on the unit. Using a voltage higher than that which is specified may result in fire or electric shock.
- Do not cut, kink, or otherwise damage nor modify the power supply cord. In addition, avoid using the power cord in close proximity to heaters, and never place heavy objects -- including the unit itself -- on the power cord, as doing so may result in fire or electric shock.
- Avoid installing or mounting the unit in unstable locations, such as on a rickety table or a slanted surface. Doing so may result in the unit falling down and causing personal injury and/or property damage.
- The socket-outlet shall be installed near the equipment and the plug (disconnecting device) shall be easily accessible.

When the Unit is in Use

- Should the following irregularity be found during use, immediately switch off the power, disconnect the power supply plug from the AC outlet and contact your nearest TOA dealer. Make no further attempt to operate the unit in this condition as this may cause fire or electric shock.
  - · If you detect smoke or a strange smell coming from the unit
  - · If water or any metallic object gets into the unit
  - · If the unit falls, or the unit case breaks
  - · If the power supply cord is damaged (exposure of the core, detached, etc.)
  - · If it is malfunctioning (no tone sounds.)
- To prevent a fire or electric shock, never open nor remove the unit case as there are high voltage components inside the unit. Refer all servicing to your nearest TOA dealer.
- Do not place cups, bowls, or other containers of liquid or metallic objects on top of the unit. If they accidentally spill into the unit, this may cause a fire or electric shock.
- Do not insert nor drop metallic objects or flammable materials in the ventilation slots of the unit's cover, as this may result in fire or electric shock.

⚠ CAUTION Indicates a potentially hazardous situation which, if mishandled, could result in moderate or minor personal injury, and/or property damage.

When Installing the Unit

- Never plug in nor remove the power supply plug with wet hands, as doing so may cause electric shock.
- When unplugging the power supply cord, be sure to grasp the power supply plug; never pull on the cord itself. Operating the unit with a damaged power supply cord may cause a fire or electric shock.
- When moving the unit, be sure to remove its power supply cord from the wall outlet. Moving the unit with the power cord connected to the outlet may cause damage to the power cord, resulting in fire or electric shock. When removing the power cord, be sure to hold its plug to pull.
- Avoid installing the unit in humid or dusty locations, in locations exposed to direct sunlight, near heaters, or in locations generating dirty smoke or steam as doing otherwise may result in fire or electric shock.

When the Unit is in Use

- Do not place heavy objects on the unit as this may cause it to fall or break which may result in personal injury and/or property damage. In addition, the object itself may fall off and cause injury and/or damage.
- Make sure that the amplifier volume control is set to minimum position before power is switched on. Loud noise produced at high volume when power is switched on can impair hearing.
- Do not operate the unit for an extended period of time with the sound distorting. This is an indication of a malfunction, which in turn can cause heat to generate and result in a fire.
- If dust accumulates on the power supply plug or in the wall AC outlet, a fire may result. Clean it periodically. In addition, insert the plug in the wall outlet securely.
- Switch off the power, and unplug the power supply plug from the AC outlet for safety purposes when cleaning or leaving the unit unused for 10 days or more. Doing otherwise may cause a fire or electric shock.

The lighting flash with arrowhead symbol, within an equilateral triangle, is intended to alert the user to the presence of uninsulated "dangerous voltage" within the product's enclosure that may be of sufficient magnitude to constitute a risk of electric shock to persons.

L'éclair accompagné d'un symbole représentant une pointe de flèche à l'intérieur d'un triangle équilatéral avertit l'utilisateur de la présence d'une "tension dangereuse" à l'intérieur de l'enceinte du téléviseur, dont la magnitude peut être suffisante pour constituer un risque de choc électrique pour les personnes.

⚠ ATTENTION

L'appareil ne doit pas être exposé aux éclaboussures ou écoulements et tous objets remplis de liquide, tels que vases, ne doivent pas être sur l'appareil.

Note: This equipment has been tested and found to comply with the limits for a Class B digital device, pursuant to part 15 of the FCC Rules. These limits are designed to provide reasonable protection against harmful interference in a residential installation. This equipment generates, uses and can radiate radio frequency energy and, if not installed and used in accordance with the instructions, may cause harmful interference to radio communications. However, there is no guarantee that interference will not occur in a particular installation.
If this equipment does cause harmful interference to radio or television reception, which can be determined by turning the equipment off and on, the user is encouraged to try to correct the interference by one or more of the following measures:
- Reorient or relocate the receiving antenna.
- Increase the separation between the equipment and receiver.
- Connect the equipment into an outlet on a circuit different from that to which the receiver is connected.
- Consult the dealer to an experienced radio/TV technician for help.

2. GENERAL DESCRIPTION

TOA's Audio Interface with USB and Bluetooth MW-41BT complies with American standards. It is equipped with Bluetooth, USB, auxiliary input and microphone input. The in-wall design and elegant appearance make it more integrated with the environment and save space.

3. FEATURES

- With bluetooth, USB, AUX and microphone inputs.
- Microphone input has the highest priority.
- Supports 24V phantom power supply.
- With 1 balances line output.

4. NOMENCLATURES AND FUNCTIONS

Bluetooth name: MW-41BT
Pairing password: 4141
Note: If multiple interfaces are installed in the same location, you can modify the remark name of MW-41BT on the audio playback device to distinguish it after the Bluetooth pairing is successful.

[Front Panel]

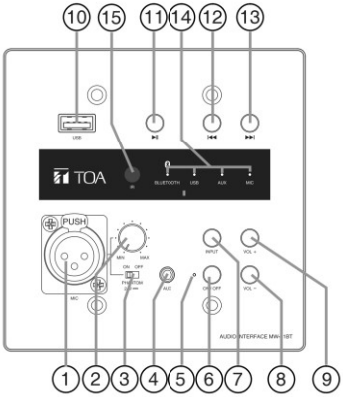

1. Microphone Input Terminal

-60 dBV, 600 Ω, electronically balanced, female XLR type connector.
Note: The microphone has the highest priority. When the microphone is turned on and the system detects a microphone signal, the sound of the source being used will be reduced by 20dB.
When the microphone is turned off, its volume is automatically restored.

2. Microphone Volume Control

Adjust the microphone level.

3. Phantom Power Switch

Sets ON or OFF depending on whether or not the microphone connected to the MIC input requires phantom power.
ON: Supplies phantom power (24 V DC) to the microphone.
OFF: Turns off the phantom power supply.

4. AUX Input Terminal

-10 dBV, 10 kΩ, unbalanced, stereo 3.5 mm (1/8") mini-jack.

5. Power Indicator

Lights blue when power is switched on.

6. Power Switch

Press to turn on the power.
Press again to turn off the power.

7. Input Channel Selection Button

press the button to select the input channel in turn, and the selected input channel indicator (No.12) is on.

8. Volume Down Button

The volume decreases by one level when short press, volume decreases quickly when long press.

9. Volume Increase Button

The volume increase by one level when short press, volume increase quickly when long press, when the volume is reduced to the maximum, the system will prompt with a beep sound.

10. USB Card Input

Socket for USB Input.
Audio formats: MP3, WAV.
Format: FAT16, FAT32, Max. 32GB.
Note: not recommended for charging.

11. Play/Pause

Pressing this button, **play** will switch to **pause**.
Pressing again **pause** will switch to **play**.
Note: The bluetooth/USB card input mode is valid.

12. Skip to Last Track

Pressing this button will skip to the last track.
Note: The bluetooth/USB card input mode is valid.

13. Skip to Next Track

Pressing this button will skip to the next track.
Note: The bluetooth/USB card input mode is valid.

14. Input Channel Indicator

Lights blue when the input channel is selected.

15. IR Receiver

Signal receiver from accessory remote control.

[Rear Panel]

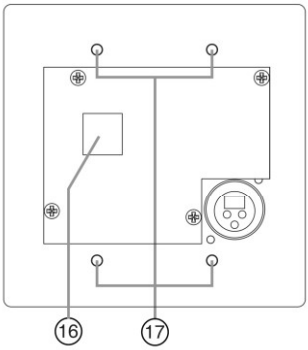

16. DC Power Input And Audio Output Connector

RJ45 connector.

- **DC Power Input (Pin7 24V+, Pin8 24V-)**

Connects to the accessory AC adapter.

- **Audio Output (Pin1 Hot, Pin2 Cold, Pin3 Earth)**

0 dBV, 10 kΩ, electronically balanced, connect to a amplifier.

17. Mounting holes

Use the accessory screws to install the interface to the 2 gang box. (Refer to p.7.)

5. CONNECTIONS

example of external equipment connections

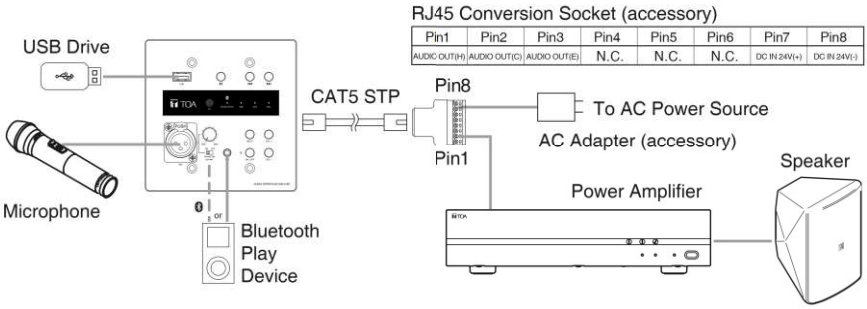

6. INSTALLATION

1. Embed 2 gang box on the wall first and fix it with screws.

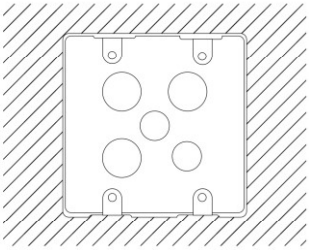

2. Connect CAT5-STP cable, then install the panel into the 2 gang box and fix it with accessory screws.

3. First connect the power amplifier and the AC adapter, and then connect the AC adapter to the AC power source.

Power ON/OFF Sequence

Power on

Source — Audio Interface — Power Amplifier

Power off

Power Amplifier — Audio Interface — Source

NOTES:

For high-power systems, power on/off sequence is very important. Failure to follow the sequence is likely to damage the equipment.

7. DIMENSIONAL DIAGRAM

Units : mm [inches]

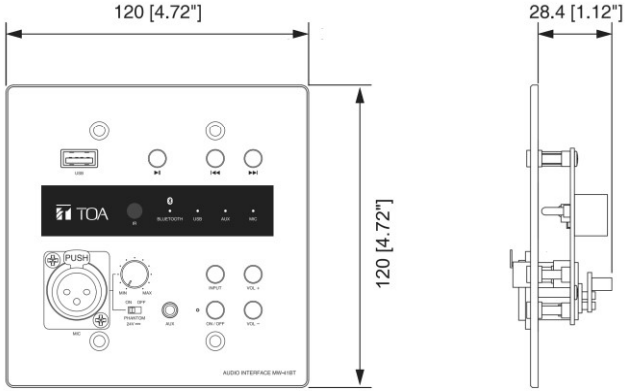

8. SPECIFICATIONS

Power Source	100-240V AC 50/60Hz
Power Consumption	3W
Audio Input	MIC input : -60 dBV, 2.2 kΩ, electronic balanced, female XLR Connector AUX input : -10 dBV, 10 kΩ,unbalanced, stereo 3.5 mm(1/8") mini-jack USB input : Audio formats: MP3, WAV Format: FAT16, FAT32, Max. 32GB Bluetooth input : Ver. 5.0, Max. 10m
Audio Output	0 dBV, 10 kΩ, electronic balanced, RJ45 connector
Frequency Response	20 - 20,000 Hz, ±3 dB
Total Harmonic Distortion	< 0.1%
S/N Ratio	> 90dB (A weighted)
Phantom Power	+24 VDC, switchable, MIC input
Indicators	Power (Blue) x 1, MIC (Blue) x 1, AUX (Blue) x 1, USB (Blue) x 1, Bluetooth (Blue) x 1
Operating Temperature	0°C to +40°C (32 °F to 104 °F)
Operating Humidity	90% RH or less (no condensation)
Finish	Panel: Aluminum, Sandblasting, Silver Decorative sheet: Acrylic, Black
Dimensions	120 (W) x 120 (H) x 40.2 (D) mm (4.72" x 4.72" x 1.58")
Weight	0.2 kg (0.44 lbs)
Accessory	AC Power adapter ...1, Remote control ...1, Box mounting screw (6-32UNC) ...4 RJ45 Conversion socket ...1

Note : Design and specification are subject to change without prior notice for improvement.

FCC WARNING

This device complies with part 15 of the FCC Rules. Operation is subject to the following two conditions: (1) this device may not cause harmful interference, and (2) this device must accept any interference received, including interference that may cause undesired operation.

Any changes or modifications not expressly approved by the party responsible for compliance could void the user's authority to operate the equipment.

NOTE: This equipment has been tested and found to comply with the limits for a Class B digital device, pursuant to Part 15 of the FCC Rules. These limits are designed to provide reasonable protection against harmful interference in a residential installation. This equipment generates, uses and can radiate radio frequency energy and, if not installed and used in accordance with the instructions, may cause harmful interference to radio communications. However, there is no guarantee that interference will not occur in a particular installation.

If this equipment does cause harmful interference to radio or television reception, which can be determined by turning the equipment off and on, the user is encouraged to try to correct the interference by one or more of the following measures:

-- Reorient or relocate the receiving antenna.

-- Increase the separation between the equipment and receiver.

-- Connect the equipment into an outlet on a circuit different from that to which the receiver is connected.

-- Consult the dealer or an experienced radio/TV technician for help.

To maintain compliance with FCC’s RF Exposure guidelines, This equipment should be installed and operated with minimum distance between 20cm the radiator your body: Use only the supplied antenna.

IC Caution:

RSS-Gen Issue 5 2019"&"CNR-Gen 5 2019:

- English:

This device complies with Industry Canada licence-exempt RSS standard(s).

Operation is subject to the following two conditions: (1) This device may not cause interference, and (2) This device must accept any interference, including interference that may cause undesired operation of the device.

The device should be installed and used within a distance of at least 20 cm between the radiator and the body.

- French:

Le présentappareilestconforme aux CNR d'Industrie Canada applicables aux appareils radio exempts de licence. L'exploitationestautorisée aux deux conditions suivantes:

(1) l'appareil ne doit pas produire de brouillage, et

(2) l'utilisateur de l'appareildoit accepter tout brouillageradioélectriquesubi, mêmesi le brouillageest susceptible d'encompromettre le fonctionnement.

Cet appareil numérique de la classe B est conforme à la norme NMB-003 du Canada.

Déclaration d'exposition aux radiations Cetéquipementestconforme Canada limitesd'exposition aux radiations dans un environnement non contrôlé. Cetéquipementdoitê treinstallé et utilisé à distance minimum de 20cm entre le radiateur et votre corps.