E10 2.0 Quick Start Guide,

Dual RF/RFID Pedestals

Reference During Installation

CKP P/N 10062884

E10 2.0 Quick Start Guide, Dual RF/RFID Pedestals

Copyright © 2015 by Checkpoint Systems, Inc. All rights reserved.
Checkpoint® is a registered trademark of Checkpoint Systems, Inc.

Released May 20, 2015.

Published by:
Checkpoint Systems, Inc.
101 Wolf Drive
Thorofare, NJ 08086

For use with Checkpoint's E10 2.0 family of products.

CHECKPOINT, COUNTERPOINT, EVOLVE AND VISIPLUS are registered trademarks of Checkpoint Systems, Inc.

All other product or service names are the property of their respective owners.

Information in this document is subject to change without notice. Companies, names and data used in examples herein are fictitious unless otherwise noted. No part of the contents of this document may be reproduced or transmitted in any form or by any means without the written permission of Checkpoint.

Document Revision Information

Part Number: 10062884

Rev	Description	Date	Authors
00	TBD	May 20, 2015	C. Huang, N. Wu, M. Kegelman

Installation Requirements

Minimum Required Hardware

(2) E10 2.0 Pedestals (for example, Single Aisle uses 1 A/N PSB and 1 P/N SSB units with the following)
(1) E10 Interpedestal Cable kit (CKP P/N 10083615)
(1) +24V DC Power Supply for RF-EAS readers
(1) +12V DC Power Supply for RFID readers

Note: All hardware items above must be ordered separately.

Small components are included in each pedestal box:
– RFID and RF On/Off Labels
– Screws for baseplate (2 anchor bolts) and Ad Panel
– Sounder Keyswitch (give to customer)

Specific antenna types (such as P/P or A/P type units) are optional per site layout (see Supported Configurations):

- A/P Type antenna
  - EU and FCC version are available. For ordering info, see Region Specific Part Numbers in manual
- P/P Type antenna (also regional)
- (1+) RFID Install Kits

  w/ 2x Coax Adapters (M-to-M, L-Shaped) to alter wiring for Modified AP layouts (AA where existing cable meets reader)

ANYTHING ELSE?

Tools Required

Hammer Drill with bit set
Circular saw (whenever floor cuts are required)
Black Felt Marker

Field Equipment

DMS Version 1.91 or later (for TR7240 for compatibility) and a supported Web Browser, such as IE 11 or Chrome
RFIDEAS Tool Version 3.0.2 or later; and (optional) PuTTY
Network patch cord for RFID Reader connect; and RJ-45 Serial-to-USB Adapter for DMS connection

Physical Dimensions

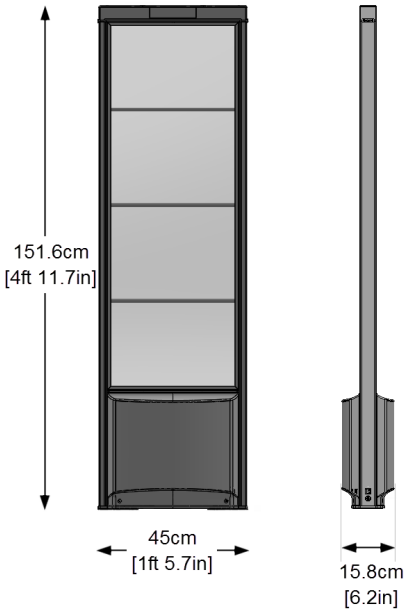

Main System I/O and UHF Ports for TX/RX Antenna

1	RFID Coax Connector Side ("top")

2	"Side Panel" with 4-Pin Digital Input, Serial Port via RJ-45 and LTS/SND (covered in the GPIO section)

3	Ethernet Port - see Client Network connection
4	IN - Interped communication
5	OUT - Interped communication
6	+12V DC Power Input conn.

Tx/Rx Utilization of UHF Ports

Standard Single Aisle: UHF Ports numbered to match RX Patch wiring		
	Patch inside Active Ped.	Patch inside any neighboring Ped.
1	RX 2	-
2	-	RX 4
3	-	-
4	-	-
5	RX 1	-
6	-	RX 3
7	-	-
8	-	-

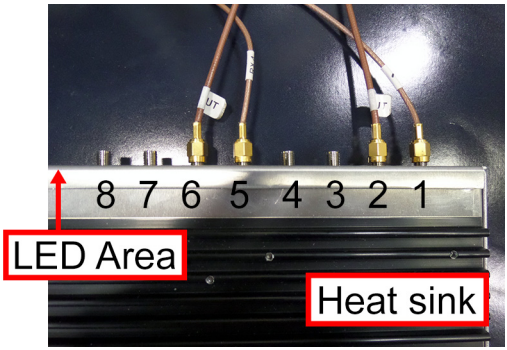

"Rule of 3" - the coax connectors used that will have cables routed to the same pedestal will always be spaced 3 connectors apart (i.e. 4th connector away from RX3 is used for RX4 in at the connector labeled 2 above)

For other aisle configurations, refer to Installation Manual or procedures below.

Supported Configurations

1.1 Single Aisle (AN-PN)

1. Use interpedestal coax cable to connect RX3 of AN to RX5 of PN.
2. Use interpedestal coax cable to connect RX4 of AN to RX6 of PN.
3. Use interpedestal network cable to connect “Interpedestal OUT” of AN to “Interpedestal IN” of PN.
4. Connect 12 VDC to the WRTZ reader using power supply system.

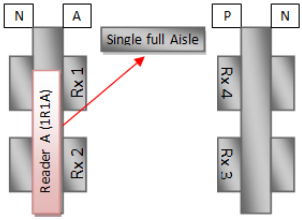

Figure 1: Pedestal / Array Layout: Standard Single Aisle

1.2 Dual Aisle (other Pedestal combinations are possible)

1. Ensure that the correct RFID Arrays are facing each other. While physically mounting kit hardware or pedestal, ensure that one of the “standard” layouts is achieved. (RX Map can be reversed when first Active should be aisle right.)
2. Use interpedestal coax cable to connect RX3 of AN to RX5 of AP.
3. Use interpedestal coax cable to connect RX4 of AN to RX6 of AP.

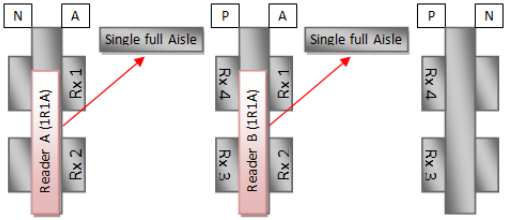

Figure 2: Standard Dual Aisle (NA-PA-PN or NP-AP-AN)

4. Use interpedestal coax cable to connect RX3 of AP to RX5 of PN.
5. Use interpedestal coax cable to connect RX4 of AP to RX6 of PN.
6. Use interpedestal network cable to connect “Interpedestal OUT” of AN to “Interpedestal IN” of AP.
7. Use interpedestal network cable to connect “Interpedestal OUT” of AP to “Interpedestal IN” of PN.
8. Connect 12 VDC to the WRTZ reader using power supply system.

1.3 Multi-Aisle (AN-AP-AP-AP-AP-PN)

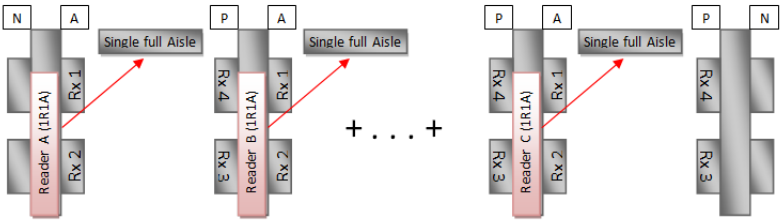

Figure 3: Pedestals in the Standard Multi-Aisle layout

1. Use interpedestal coax cable to connect RX3 of AN to RX5 of AP.
2. Use interpedestal coax cable to connect RX4 of AN to RX6 of AP.
3. Use interpedestal coax cable to connect RX3 of AP to RX5 of next AP.
4. Use interpedestal coax cable to connect RX4 of AP to RX6 of next AP.
5. Use interpedestal coax cable to connect RX3 of next AP to RX5 of PN.
6. Use interpedestal coax cable to connect RX4 of next AP to RX6 of PN.
7. Use interpedestal network cable to connect “Interpedestal OUT” of AN to “Interpedestal IN” of AP.

8. Use interpedestal network cable to connect “Interpedestal OUT” of AP to “Interpedestal IN” of next AP.
9. Use interpedestal network cable to connect “Interpedestal OUT” of next AP to “Interpedestal IN” of PN.
10. Connect 12 VDC to the WRTZ reader using power supply system.

Wiring of Interpedestal Network Chain

This connection diagram applies for all E10 2.0 model antennas (assuming RFID-enabled kit hardware is installed, either as upgrade or a pre-built Dual RF/RFID system). Note that custom-cabling from the last PN antenna’s NETWORK port to the Evolve TR7240 board may apply. “Groups” of pedestals can be chained together in order to reduce the number of Ethernet drops required. There is a disatvantage to this where any shutdown to board functionality will disable (MV) to all subsequent pedestals; this is a customer education opportunity (basically, their decision to make) during planning.

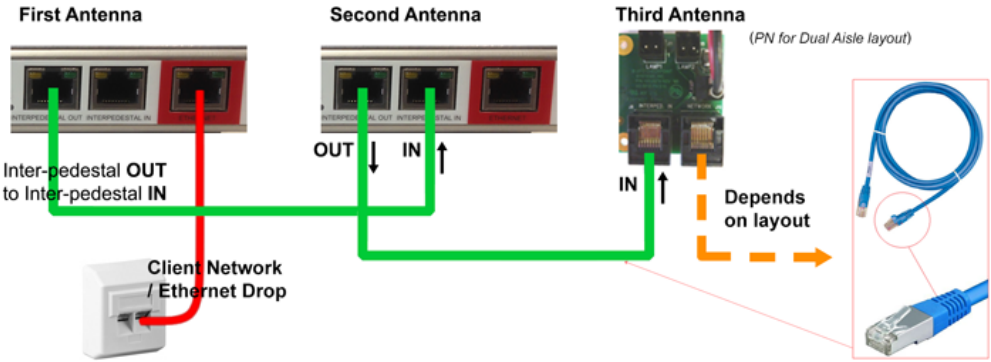

Dual Aisle Configurations

2.1 One Reader Two Aisles (1R2A)

2.1.1 One Reader for One and Half Aisle (1.5 Aisles)

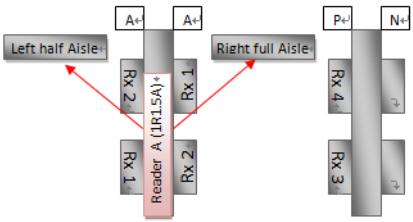

Figure 4: AP Pedestal configured for 1.5 Aisles of RFID detection

The “Half Aisle” covers the distance of 2 meters, but performance may be lower than one aisle configuration. The calibration for half aisle is the same as performed for one aisle. Also, the RunTime Benchmark (RTBM) procedure is the same, only pick test is performed per aisle.

1. Use interpedestal coax cable to connect RX3 of AA to RX5 of PN.
2. Use interpedestal coax cable to connect RX4 of AA to RX6 of PN.
3. Use interpedestal network cable to connect “Interpedestal OUT” of AA to “Interpedestal IN” of PN.
4. Connect 12 VDC to the WRTZ reader using power supply system.

2.1.2 One Reader for Two Aisles (Dual-Aisle)

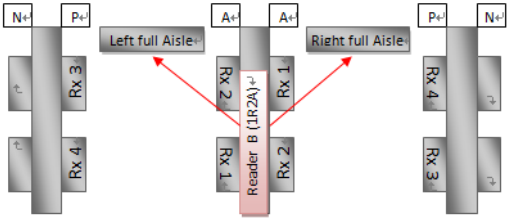

Figure 5: AP configured for 2 Full Aisles (1R2A layout)

1. Use interpedestal coax cable to connect RX3 of AA to RX5 of first PN.
2. Use interpedestal coax cable to connect RX4 of AA to RX6 of first PN.
3. Use interpedestal coax cable to connect RX7 of AA to RX5 of second PN.
4. Use interpedestal coax cable to connect RX8 of AA to RX6 of second PN.
5. Use interpedestal network cable to connect “Interpedestal OUT” of first PN to “Interpedestal IN” of AA.
6. Use interpedestal network cable to connect “Interpedestal OUT” of AA to “Interpedestal IN” of second PN.
7. Connect 12 VDC to the WRTZ reader using power supply system.

2.2 One Reader Two Aisles Extensions

2.2.1 Two Readers Three Aisles (2R3A)

2 full aisles + 2x half aisle

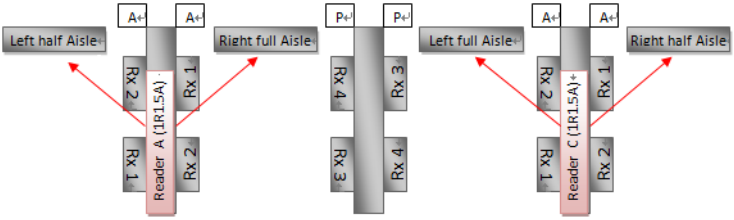

Figure 6: 2 AP Pedestals configured for “2 Full and 2 half aisles”

In this pedestal layout, the AP pedestals are in positions 1 and 3 (see above). Each system has both front and rear RFID Arrays driven by its own internal WRTZ-2000 Reader; meanwhile, in the center aisle position (2) a Passive/Passive unit is installed, which must have each array connected to the neighboring active. (Half aisles are outside the aisle, which makes this configuration suitable when there is a 4-6 meter “MALL Opening” (see Diagrams).

1. Use interpedestal coax cable to connect RX3 of first AA to RX5 of PP.
2. Use interpedestal coax cable to connect RX4 of first AA to RX6 of PP.
3. Use interpedestal coax cable to connect RX3 of second AA to RX9 of PP.
4. Use interpedestal coax cable to connect RX4 of second AA to RX10 of PP.
5. Use interpedestal network cable to connect “Interpedestal OUT” of first AA to “Interpedestal IN” of PP.
6. Use interpedestal network cable to connect “Interpedestal OUT” of PP to “Interpedestal IN” of second AA.
7. Connect 12 VDC to the WRTZ reader using power supply system.

2.2.2 Two Readers Four Aisles (2R4A)

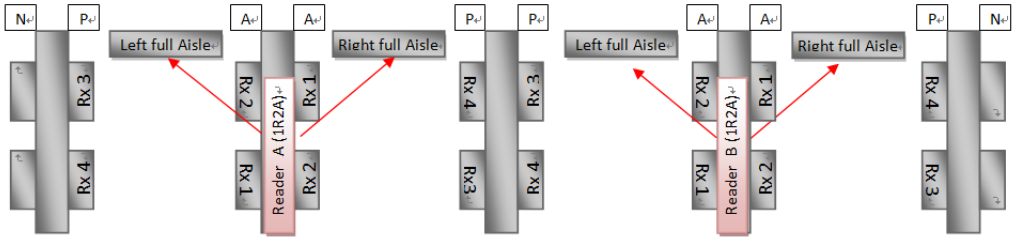

Figure 7: 2 AP Pedestals configured for widest application "2R4A" - 2 readers driving 4 aisles

This layout requires 2 AP pedestals/kits, and then 2 PNs (either can be removed for a half aisle on that side), as well as 1 PP in the center aisle position. 4 Full Aisles are covered. (Outside of the total aisle span, there is NO backfield detection; therefore, the far left and right Pedestals should be up against a wall or other physical blocking objects.)

1. Use interpedestal coax cable to connect RX7 of first AA to RX5 of first PN.
2. Use interpedestal coax cable to connect RX8 of first AA to RX6 of first PN.
3. Use interpedestal coax cable to connect RX3 of first AA to RX5 of PP.
4. Use interpedestal coax cable to connect RX4 of first AA to RX6 of PP.
5. Use interpedestal coax cable to connect RX3 of second AA to RX9 of PP.
6. Use interpedestal coax cable to connect RX4 of second AA to RX10 of PP.
7. Use interpedestal coax cable to connect RX7 of second AA to RX5 of second PN.
8. Use interpedestal coax cable to connect RX8 of second AA to RX6 of second PN.
9. Use interpedestal network cable to connect "Interpedestal OUT" of first PN to "Interpedestal IN" of first AA.
10. Use interpedestal network cable to connect "Interpedestal OUT" of first AA to "Interpedestal IN" of PP.
11. Use interpedestal network cable to connect "Interpedestal OUT" of PP to "Interpedestal IN" of second AA.
12. Use interpedestal network cable to connect "Interpedestal OUT" of second AA to "Interpedestal IN" of second PN.
13. Connect 12 VDC to the WRTZ reader using power supply system.

Advanced I/O

Name	Purpose	For more details
Digital In / Out connector (4-Pin Euro)	General purpose digital relays	see Input/Output
Serial Port via Standard 8-Pin RJ-45	Connect to FS laptop via Serial cable	see Serial applications
Outputs for Alarm Lights and Sound	2-Pin LTS/SND standard euro-block connectors, with +12V DC output	see Complete Wiring

Complete Wiring

The detailed procedure below has floor cut and ferrite core installation details that apply to all E10 2.0 installations. For RF-EAS system setup, refer to the Evolve manual (CKP P/N 7994249) or Quick Start Guide (CKP P/N 10077599).

Procedure

1. Make the aisle floor cuts to accept all cables for Dual RF/RFID system. For the single aisle layout, shown below with the minimum cables for PRI to SEC and RFID support, there will be five (5) individual cables in the aisle:
   - 2 RFID Coax Cables
   - 1 RFID Interpedestal Communication cable (LED + COMMs)
   - 1 RF-EAS Coax Cable
   - 1 RF-EAS Sync Cable

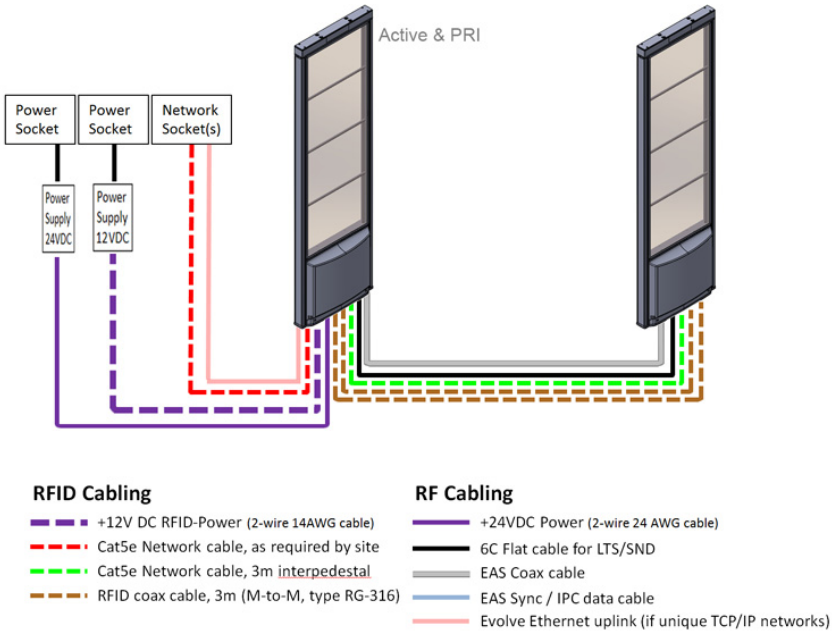

Figure 8: Single Aisle floor plan

Note: The number will vary in other aisles (where the 8C modular cable will link between primaries, for example).

Note: RF-EAS may use the same network (refer to Step 6 below), depending on if Evolve will have its own Ethernet uplink.

2. Route Cat 5e from client network connection(s), where each reader can have an independent uplink, or readers can be chained and only one unit makes a physical TCP/IP connection (Network Site design). Wait to make live Ethernet connection with customer network; during setup, typically a unique IP address is assigned to each reader; and the customer IT plan will determine what settings to apply.

3. From this pedestal's reader, connect from the Interped OUT Port using an interpedestal network cable (shielded Cat 5e from RFID installation/cable kit (cable is CKP P/N 7206088 - and the kit is CKP P/N 10083615). Apply a 10cm ferrite core with 2 turns.
4. Route Cat5 and coax cables to next pedestal (if not already). For either PP or PN type units, this connection will carries RFID lights and sound, as well as RFID Network signal.

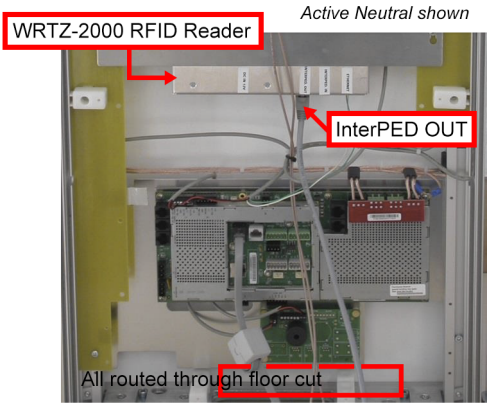

Figure 9: InterPED wiring

5. Connect at the InterPED IN Port and apply a 10cm ferrite core with 2 turns.
6. At last pedestal, connect from NETWORK Port to the Evolve board for TCP/IP network sharing.
7. Connect the RF-EAS Sync cable (shown with ferrite core already applied). Apply 10cm ferrite core.
8. Connect the RFID Coax cable pair (this can be done at any time, before power up).
   - RX4 to RX4 array keeping the labels accurate for future reference.
   - RX3 to RX3.
9. Connect PSU to the system. First use Voltmeter to identify + - polarity of DC power cord. Connect + to Pin1 of connector and - to Pin 3 as shown. Insert plug into power receptacle, then tighten the screws until secure. If needed, PSUs can be "daisy-chained."

Complete RFID Alarm LED Wiring

Lamp 1, Lamp 2 and Lamp Center all share the same pinout. Any lights for RFID to be supported, terminate the 1 pin connector and plug in at the side of Reader chassis.

Pin #	2-Pin Euro Connector	Wire Color (Polarity)
1	Right	Red (+)
2	Left	Black (GND)

Optional: External Sounder Connection

Another sounder (besides the one inside the RFID reader) can be equipped. Install the unit inside the pedestal as recommended, then wire with same pin-out above.

RFID Commissioning / UHF Antenna Tuning

This procedure requires RFID-EAS tool (see Required tools). An overview is provided below.

- Launch DMS.
- Tune system for RF-EAS (connect to Evolve Board).
- Confirm default profile for RFID Reader(s). Apply Region and if applicable, set the Application Mode to “Dual Aisle.”
- Perform RX Map and EPC Positioning setup for Left and Right aisles.
- Proceed with DMS to confirm detection.

Important Information for our Users in North America

FCC Regulatory Compliance Statement

Checkpoint Systems, Inc., offers Electronic Article Surveillance (EAS) or Radio Frequency Identification Products that have been FCC certified or verified to 47 CFR Part 15 Subparts B/C. Appropriately, one of the following labels will apply to the approval:

> NOTE: This equipment has been tested and found compliant within the limits for a class A digital device, pursuant to Part 15 of the FCC Rules. These limits are designed to provide reasonable protection against harmful interference when the equipment is operated in a commercial environment. This equipment generates, uses, and can radiate interference to radio communications. Operation of this equipment in a residential area is likely to cause harmful interference in which case the user will be required to correct the interference at own expense.
>
> **- OR -**
>
> This device complies with Part 15 of the FCC Rules. Operation is subject to the following two conditions: (1) including this device may not cause harmful interference, and (2) this device must accept any interference received, including interference that may cause undesired operation, which may include intermittent decreases in detection and/or intermittent increases in alarm activity.

Where applicable, Checkpoint Systems, Inc. Electronic Article Surveillance (EAS) products comply with the Maximum Permissible Exposure limits FCC 47 C.F.R. 1.1307(b)(1)) for US and RF Exposure limit RSS 102 , table 4.2 for Canada.

Industry Canada Regulatory Compliance Statement

This device complies with the Industry Canada license-exempt RSS standard(s). Operation is subject to the following two conditions:

1. This device may not cause interference, and
2. This device must accept any interference, including interference that may cause undesired operation of the device.

Equipment Compliance Statement

Checkpoint's Electronic Article Surveillance (EAS) products have been designed for safeness during normal use and, where applicable have been certified, listed, or recognized in accordance with one or more of the following safety standards; UL 60950-1, CSA C22.2 No. 60950-1-07. Additional approvals may be pending.

WARNING: Changes or modifications to Checkpoint's EAS equipment not expressly approved by the party responsible for assuring compliance could void the user's authority to operate the equipment in a safe or otherwise regulatory compliant manner.

Equipment Compliance Statement

WARNING: Changes or modifications to Checkpoint's EAS or Radio Frequency Identification (RFID) equipment not expressly approved by the party responsible for assuring compliance could void the user's authority to operate the equipment in a safe or otherwise regulatory compliant manner.

Important Information to our Users in Europe

CE Regulatory Compliance Statement

Where applicable, Checkpoint Systems, Inc. offers certain Electronic Article Surveillance (EAS) products that have CE Declarations of Conformity according to R&TTE Directive 99/5/EC, EMC Directive 2004/108/EC, and Low Voltage Directive 2006/95/EC.

System Electromagnetic Compatibility (EMC) has been tested and notified through Spectrum Management Authorities if necessary, using accredited laboratories, whereby, conformity is declared by voluntarily accepted European Telecommunications Standards Institute (ETSI) standards EN 301489-3 and EN 302208 and/or EN 300330, as applicable.

> NOTE: Certain Electronic Article Surveillance (EAS) equipment have been tested and found to conform to the CE emission and immunity requirement in Europe. This equipment generates, uses, and can radiate radio frequency energy and, if not installed and used in accordance with the instruction manual, may cause harmful interference to radio communications. Under unusual circumstances, interference from external sources may degrade the system performance, which may include intermittent decreases in detection and/ or intermittent increases in alarm activity. However, there is no guarantee that interference will not occur in a particular installation. If this equipment experiences frequent interference from external sources or does cause harmful interference to radio communications reception, which can be determined by turning the equipment off and on, please contact a Checkpoint Systems representative for further assistance.

Where applicable, Checkpoint Systems, Inc. Electronic Article Surveillance (EAS) products comply with the limitation of human exposure to electromagnetic fields EN 50364 and with the limit values of German accident prevention regulations for electromagnetic fields BGVB11.

RoHS Compliance Statement

The RoHS Directive stands for "the restriction of the use of certain hazardous substances in electrical and electronic equipment." A RoHS compliant product means that electrical and electronic equipment cannot contain more than maximum permitted levels of lead, cadmium, mercury, hexavalent chromium, polybrominated biphenyl (PBB) and polybrominated diphenyl ether (PBDE). Checkpoint is in compliance with the RoHS directive.

WEEE Compliance Statement

The Waste Electrical and Electronic Equipment Directive (WEEE) applies to companies that manufacture, sell, distribute, or treat electrical and electronic equipment in the European Union. There are a number of obligations imposed on Checkpoint as a supplier of electrical and electronic equipment. Checkpoint's compliance approach for each of these obligations is provided below.

WEEE Marking

All products that are subject to the WEEE Directive supplied by Checkpoint are compliant with the WEEE marking requirements. Such products are marked with the "crossed out wheelie bin" WEEE symbol shown below in accordance with European Standard EN 50419.

Information for Users

According to the requirements of European Union member state WEEE legislation, the following user information is provided in English for all Checkpoint supplied products subject to the WEEE directive.

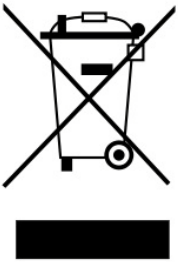

This symbol on the product or on its packaging indicates that the product must not be disposed of with normal waste. Instead, it is your responsibility to dispose of your waste equipment by arranging to return it to a designated collection point for the recycling of waste electrical and electronic equipment. By separating and recycling your waste equipment at the time of disposal you will help to conserve natural resources and ensure that the equipment is recycled in a manner that protects human health and the environment. For information about how to recycle your Checkpoint supplied waste equipment, please contact the Checkpoint Systems, Inc. Field Service office in your region. Customers can obtain this information from their system User's Guide.

REACH Compliance Statement

The European REACH Regulation 1907/2006 on Registration, Evaluation, Authorization, and Restriction of Chemicals (REACH), Annex XVII entered into force in June 2009, and affects all companies producing, importing, using, or placing products on the European market. The aim of the REACH regulation is to ensure a high level of protection of human health and the environment from chemical substances.

Checkpoint Systems' substances management system follows and complies with the current revision of the REACH Regulation on the substances as identified by ECHA (European Chemical Agency).

Checkpoint Systems' products are considered articles as defined in REACH Article 3 (3).

These products/articles under normal and reasonable conditions of use do not have intended release of substances. Therefore the requirement in REACH Article 7 (1) (b) for registration of substances contained in these products/articles does not apply.

Checkpoint Systems' products/articles, do not contain Substances of Very High Concern or if there are SVHC in the product/article, the content is less than the 0.1% (wt/wt) as defined by REACH Article 57, Annex XIV, Directive 67/548/EEC. Therefore the requirement in REACH Article 7 (2) to notify ECHA if a product/article contains more than 0.1% wt/wt of an SVHC and tonnage exceeding 1 tonne per importer per year is not applicable.

Checkpoint Systems' European operations do not manufacture or import chemicals, therefore Checkpoint Systems no obligation to register substances.

Packaging Compliance Statement

No CFCs (chlorofluorocarbons), HCFCs (hydrofluorocarbons) or other ozone depleting sub-stances are used in packaging material. Chromium, lead, mercury, or cadmium are not intentionally added to packaging materials and are not present in a cumulative concentration greater than 100 ppm as incidental impurities. No halogenated plastics or polymers are used for packaging material. Checkpoint complies with the EU Directive 94/62/EEC.