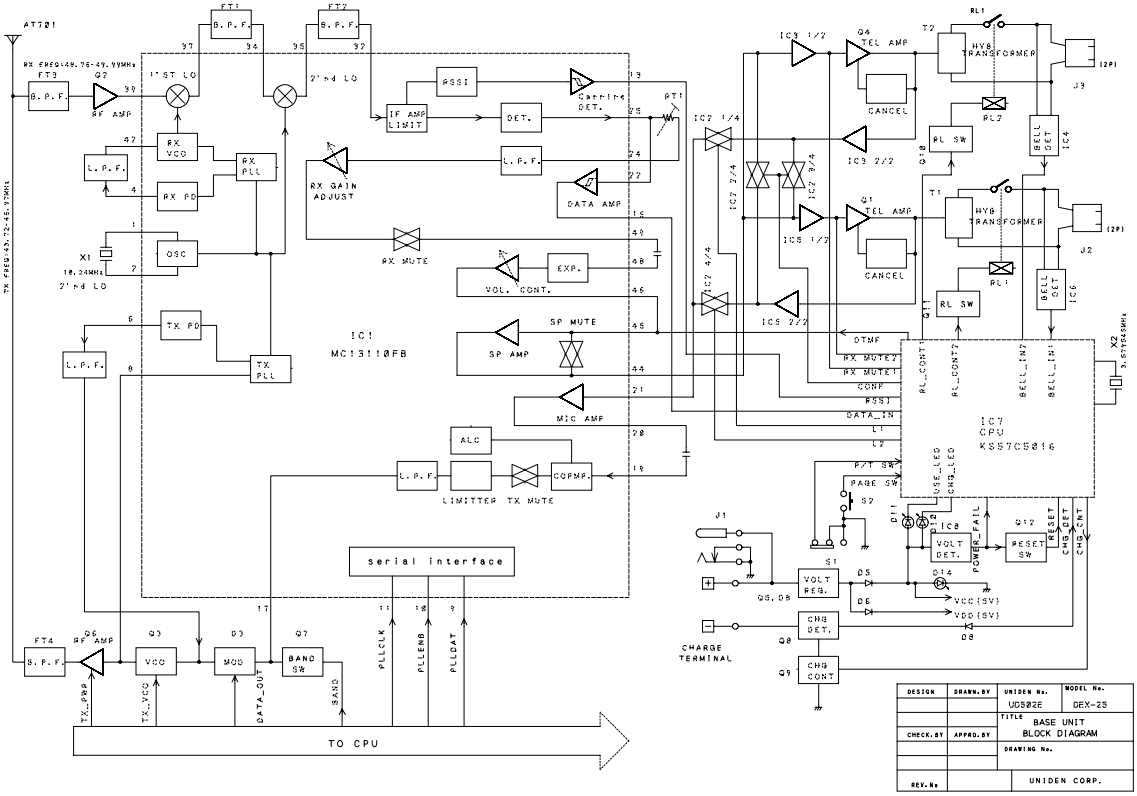

DESIGN	DRAWN.BY	UNIDEN No.	MODEL No.
		UD502E	DEX-23
		TITLE	BASE UNIT BLOCK DIAGRAM
CHECK.BY	APPRO.BY		
		DRAWING No.	
REV.No		UNIDEN CORP.	

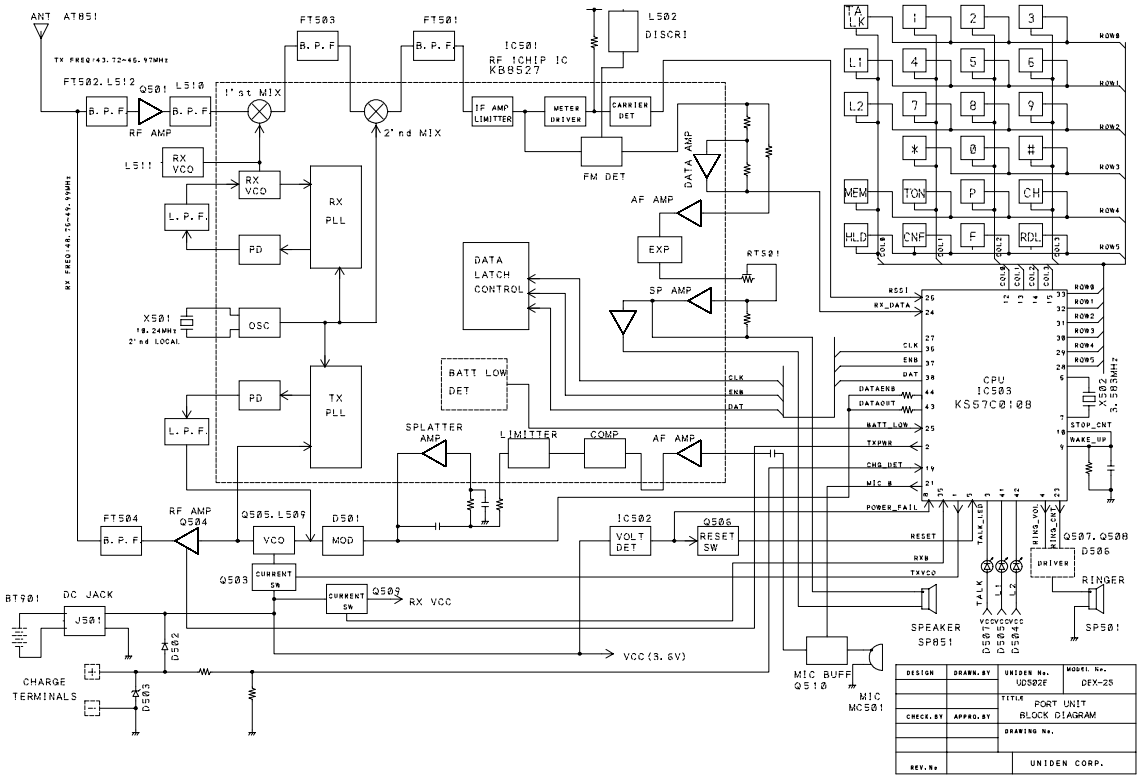

DESIGN	DRAWN. BY	UNIDEN No. UDS02E	MODEL No. DEX-25
		TITLE PORT UNIT BLOCK DIAGRAM	
CHECK. BY	APPRO. BY	DRAWING No.	
REV. No		UNIDEN CORP.	