User's Manual

Ink Jet Colour Printer

Artjet 12

olivetti

Contents

Introducing the Printer 1
Parts of the Printer 1
Switching on and off of the Printer 2
The Operator's Panel 3
Printer statuses 3
Button Functions 4
Printer Software 5
The Printer Monitor 6
Opening the Printer Monitor 7
Printer Properties 7
Opening Printer Properties 8
Spool Manager for Windows 3.1/3.11 9
Opening the Spool Manager 9
On-line Help Guides 10
Accessing the on line help guide for the print driver 10
Accessing the Troubleshooting on line help guide 12
The Print Head 13
Replacing the Print Head 14
Completing Print Head Installation 16
Print Head Alignment 17
Print Head Care and Preservation 18
Cleaning the Print Head 18
Cleaning the Print Head Nozzles 19
Manually Cleaning Print Head Nozzles and Electrical Contacts 20
Cleaning the Print Head Carriage Electrical Contacts 21
Print Test from Printer Monitor 22
Printing on Common Paper 23
Loading the Paper 23
Loading the Paper in the Automatic Feeder 23
Printer Settings 24
Loading the Paper in the Manual Feeder 25

Printing on Other Supports 26
Printing on Photographic Paper 27
Printing on Transparent Paper 28
Printing on Coated Paper 29
Printing on Glossy Paper 30
Printing on Tee Shirt Transfers 31
Printing Envelopes 32
Printing Cards 33
Printing on Customised Paper Sizes 34
Printing on Banners 35
Consumables 37
Print Heads 37
Print Supports 37
Technical Specifications 38

Introducing the Printer

Your machine is a colour inkjet printer for high quality graphic and text printing. It can print on individual sheets, envelopes, labels, cards, glossy paper, coated paper, photographic paper, transparencies, banners and transfers for tee-shirts.

Parts of the Printer

The figure below shows the front parts of the printer.

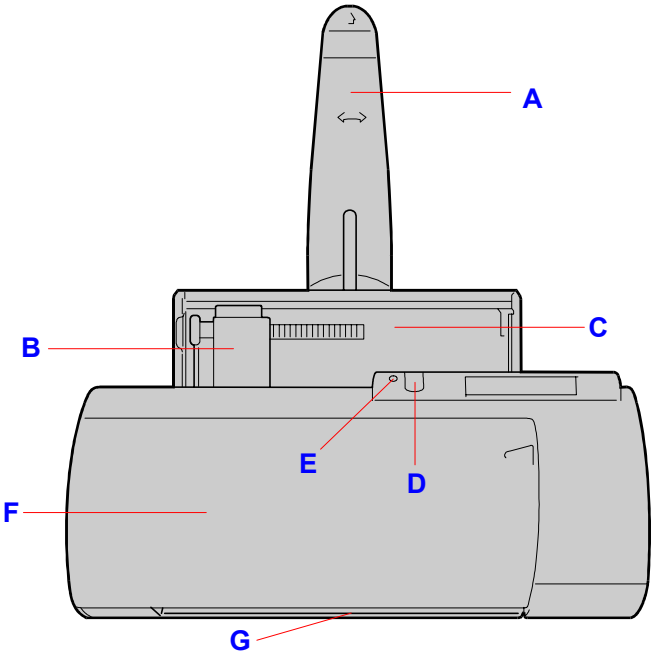

A. **Paper support**: it supports the paper and any other materials loaded into the automatic sheet feeder.

B. **Side paper guide**: aligns sheets according to their width.

C. **Automatic feeder**: inserts paper and special print supports.

D. **Operator panel button**: see **Button Functions** section.

E. **Indicator LED on the operator's panel**: indicates printer status (see **Printer Statuses** section).

F. **Front door**: allows access inside the machine to replace the print head or remove paper jams.

G. **Paper outlet**: after documents are printed.

The following figure shows the parts that can be accessed from the rear of the printer.

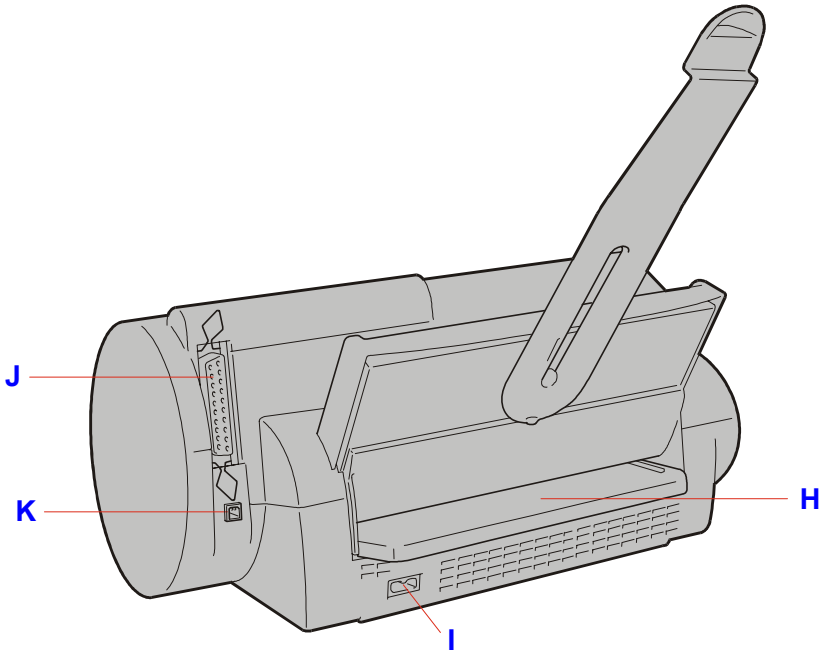

H. **Manual feeder**: allows to insert special print supports or a single sheet into the machine.

I. **Power cord connector**: allows to connect the printer to mains power supply.

J. **Parallel communication port**: allows connection and dialogue with the computer (parallel interface).

K. **USB communication port**: allows connection and dialogue with the computer (Universal Serial Bus interface).

Switching on and off of the Printer

The printer has no on/off switch.

- It switches itself off automatically after being inactive for 4 minutes (by going into "Energy Saving mode").
- It switches itself on automatically when receiving commands from the PC or data to print out.

Do not ever forget to unplug the printer when accessing its electronic internal parts.

The Operator's Panel

The Operator's panel on the printer features a button and an indicator LED.

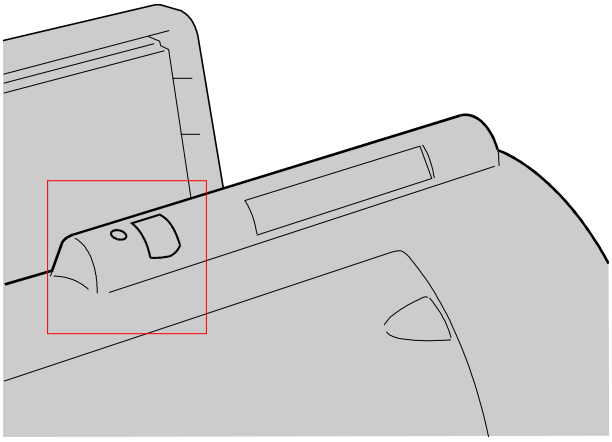

Button operation depends on the status of the printer, which is indicated by the LED.

Printer statuses

STATUS	Description	Indicator LED
Standby	The printer is on but the FW has not been loaded yet.	On
Ready	The printer is free and ready to receive data to print out.	On
Energy Saving	The printer, after being inactive for four minutes, goes automatically into the "energy saving" mode and remains ready to receive data to print out.	Off
Data receiving	The printer is busy receiving data until the printout is completed.	Low frequency blinking
Error	Error condition (no paper, paper jammed, no print head, printer failure).	High frequency blinking

The printer goes from **standby** to **ready** mode once the FW has been loaded.

The change from the **ready** to **energy saving** mode is automatic (timeout driven; after being inactive for four minutes).

Button Functions

The button functions depend on the printer mode:

1. **Ready/Energy Saving** mode:
   - Pressing the button the first time moves the print head carriage to the **print head replacement** position.
   - Pressing the button the second time returns the print head carriage to its **rest** position.
2. **Data Receiving** mode:
   - The button is inactive.
3. **Error** mode:
   - Pressing the button once can cause:

     a) Paper feeding by the automatic feeder (paper present).

     b) Paper ejection, if the paper is stopped under the print head.

Printer Software

The printer is not operational before you install the software, which is contained in one of the two CDs supplied with the machine.

After installation, described in the **Installation** folder, the following **applications** are available on the computer:

- **Printer Monitor**
- **Printer Properties**
- **Spool Manager for Windows 3.1x**

The following **guides** are also available:

- **Operator Manual**
  This document, which you can consult from Acrobat Reader and **print** (with table of contents and page numbering)
- **Print driver help**
  context-driven, available from WinHelp
- **Troubleshooting**
  context-driven, available from WinHelp

The Printer Monitor

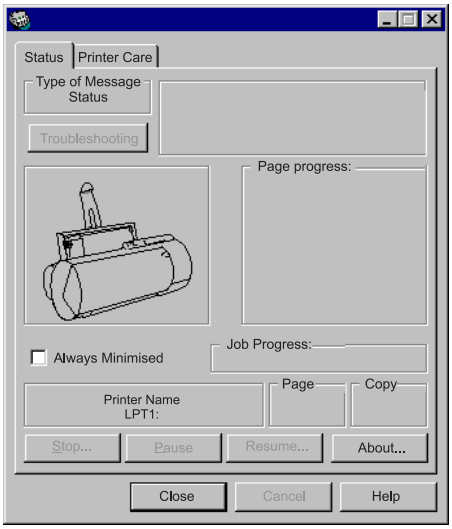

The Printer monitor is displayed (or run minimized) when a print process is sent to the machine.

It comprises two tabs:

1. the Status tab
2. the Printer Care tab

The **Status tab** allows to display the progress of an ongoing print process and it also indicates any error conditions.

If an error is signalled, click on the **Troubleshooting** button of the **Status tab** to open the page of the context-driven help which will help to solve the problem.

The **Printer Care tab** displays the quantity of ink still available and it allows to:

- Install, replace, align and clean the print head
- Print a demo and a test page
- Access the **Driver Help** and **Troubleshooting** on-line help guides

See also the sections **Printer Monitor** sections of the **Driver Help**.

Opening the Printer Monitor

In Windows 95/98/2000/NT:

1. Click on **Start** and then on **Programs**
2. Click on the **"Printer_Name"** Program group
3. Click on **Printer Monitor**

In Windows 3.1/3.11:

Double click on the **Printer Monitor** icon in the **"Printer_Name"** Program group.

Printer Properties

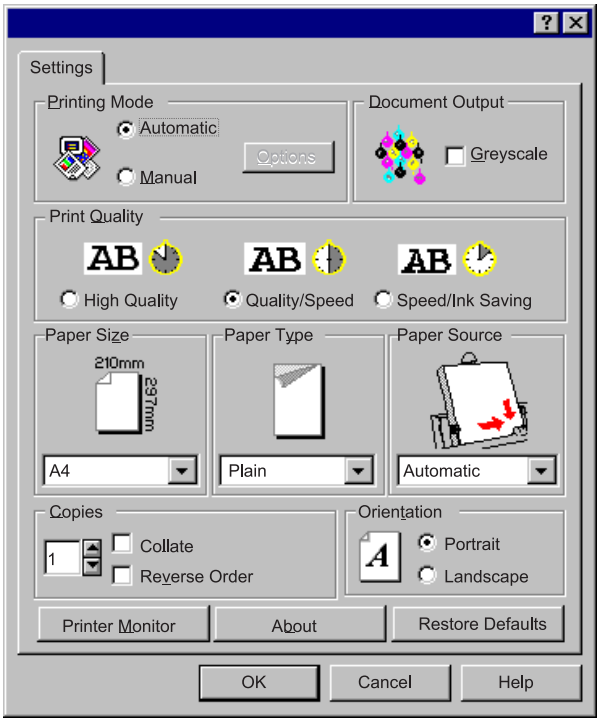

The **Settings** card in the **Printer Properties** dialogue box allows to:

- define print quality
- adjust print colours and intensity
- select print supports and their size
- select the orientation of the printed page
- restore predefined settings.

Opening Printer Properties

Printer Properties can be opened from the application or from Windows.

Opening from the Application

Nearly all applications allow to open Printer Properties, with the following procedure:

1. From the **File** menu of the application, select **Set print** (or **printer**).
2. In the dialogue box that then opens, click on the **Properties** (**Set**, **Options**) button, depending on the application.
3. Modify settings values as needed.

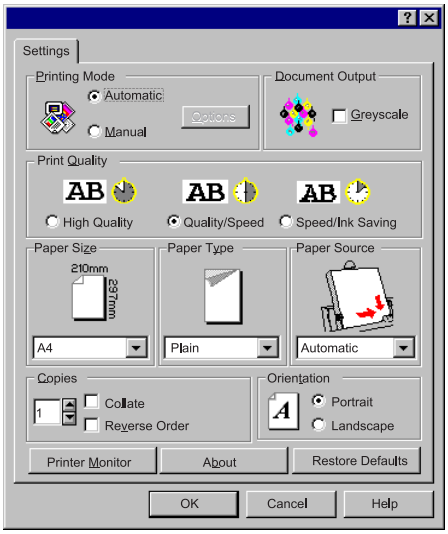

Opening from Windows

Printer Properties can be opened directly from Windows. In this case, the changed settings are applied to the print processes of all applications (unless they are changed in the application itself).

The opening procedure **for Windows 95/98/2000/NT** is as follows:

1. Click on **Start** and select **Settings**, then **Printers**.
2. **Right click** on the printer icon.
3. Click on **Properties** in the menu side bar menu.

The opening procedure **for Windows 3.1/3.11** instead is as follows:

1. Double click on the **Control panel** icon.
2. Double click on the **Printers** icon.
3. Select la **Installed Printer** and click on the **Set...** button.

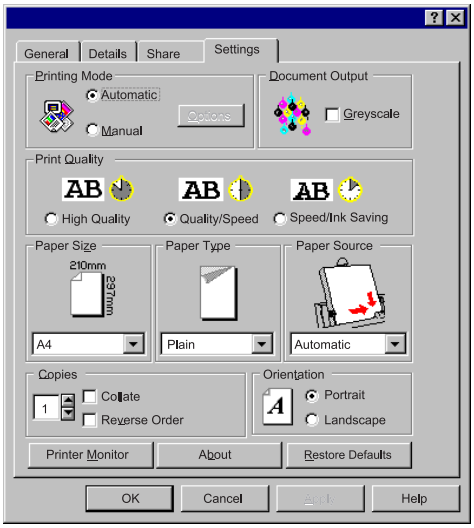

Spool Manager for Windows 3.1/3.11

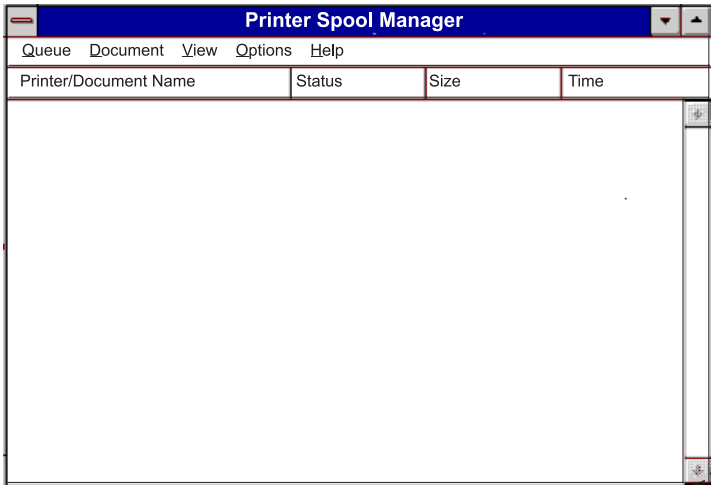

Windows 95/98/2000 have their own Spool Manager (normally reached by double clicking on the printer icon displayed on the task bar, on the bottom right side of the PC screen, during printing jobs).

For Windows 3.1/3.11, the printer's software installs a specific Spool Manager, which improves the performance of the standard (Windows 3.1/3.11) Print Manager and allows to:

- Cancel or interrupt print processes
- Display print processes in the queue
- Reinsert a print process in the queue

Opening the Spool Manager

1. Open the **"Printer_Name"** Program group.

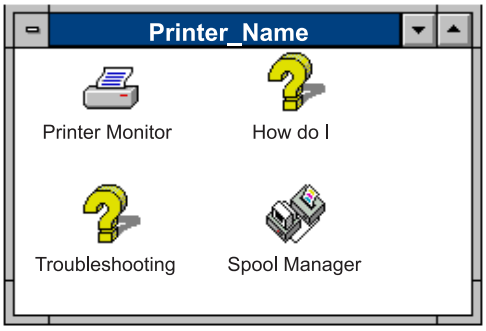

2. Double click on the **Spool Manager** icon.
3. Consult the **Spool Manager** on-line help, clicking on the **Help** in the menu bar.

On-line Help Guides

In addition to this manual, the following **on line help guides** are available:

1. **On line help guide for the print driver**
2. **Troubleshooting**

Accessing the on line help guide for the print driver

Direct access in Windows 95/98/2000/NT

1. Click on Start
2. Select **Programs** and then **"Printer_Name"**

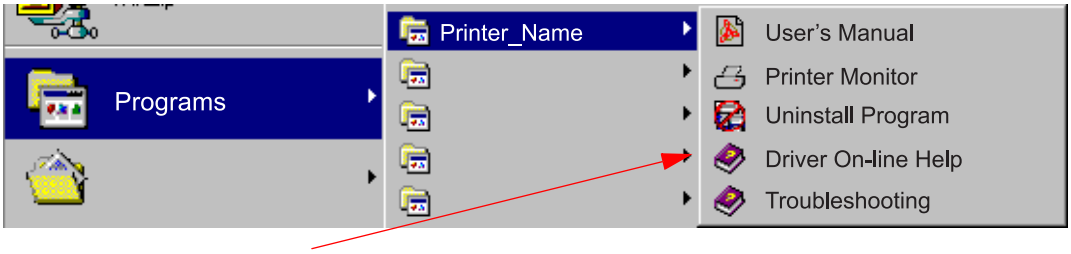

3. Click on the on-line help icon.

Direct Access in Windows 3.1/3.11

1. Open the **"Printer_Name"** Program group.

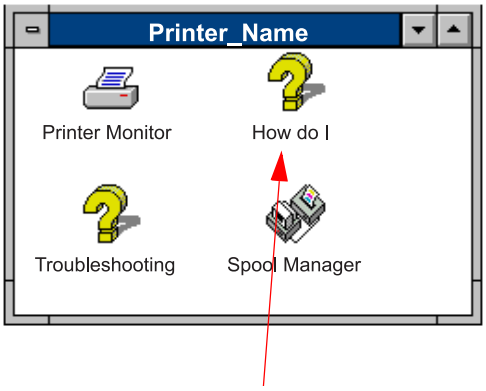

Double click on the **How do I** icon.

Context-driven Access from the Driver Settings Tab

1. Open **Printer Properties** (see **Opening Printer Properties**).
2. Click on the**? button** at the bottom right-hand corner

   or, select the parameter of the tab to be varied and press the **F1** key on your computer's keyboard

   or (Windows 95/98/2000/NT only), select the parameter of the tab to be varied and click with the **right button** of the mouse

   or (Windows 95/98/2000/NT only), select the parameter of the tab to be varied, click on the **? at the top right** of the tab, drag the **?** on the selected parameter and click.

Context-driven Access from the Printer Monitor Tabs

1. Open the **Printer Monitor** (see **Opening the Printer Monitor**).
2. Click on the **? button** at the bottom right, for each of the Printer Monitor tabs

   or, click on the **On line help guide button** of the Printer Monitor **Printer Care tab**.

Accessing the Troubleshooting on line help guide

Direct Access from Windows 95/98/2000/NT

1. Click on Start
2. Select **Programs** and then **"Printer_Name"**.

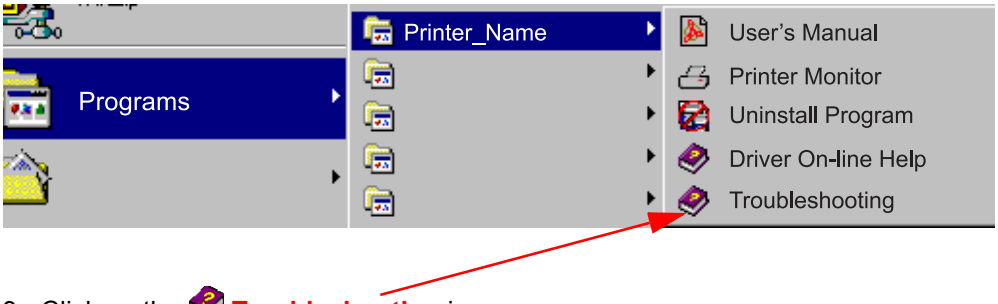

3. Click on the **Troubleshooting** icon

Direct Access from Windows 3.1/3.11

1. Open the **"Printer_Name"** Program group.

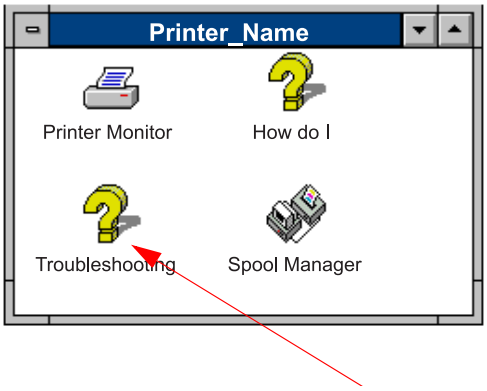

2. Double click on the **Troubleshooting** icon.

Context-driven Access from the Printer Monitor

1. Open the **Printer Monitor** (see Opening the Printer Monitor).
2. Click on the **Troubleshooting button** of the Printer Monitor **Status tab**, to be guided to solve the **problem associated to the error message displayed** in the tab

   or, click on the **Troubleshooting button** of the Printer Monitor **Printer Care tab**, to access the first page of the Guide.

The Print Head

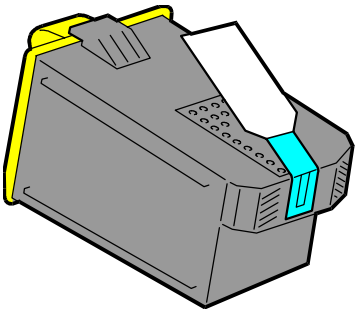

The printer can use the colour print head, supplied with it, or the black one, which can be ordered separately.

This chapter describes the following procedures:

- **Replacing the print head**
- **Aligning the print head**
- **Print head preservation**
- **Cleaning nozzles automatically**
- **Cleaning nozzles and print head contacts automatically**
- **Cleaning the electrical contacts of the print head support**

For best print results, never forget to **align the print head** (see **Completing Print Head Installation**).

Replacing the Print Head

When the print head has run out, or if you want to install a black print head instead of the colour print head (or vice versa), you need to remove it from the printer.

To remove the print head from the printer:

1. Open the printer monitor **Printer Care tab** (see **Opening the Printer Monitor**).

2. Click on the **Printer Care tab**.

3. Click on the **Change** button.

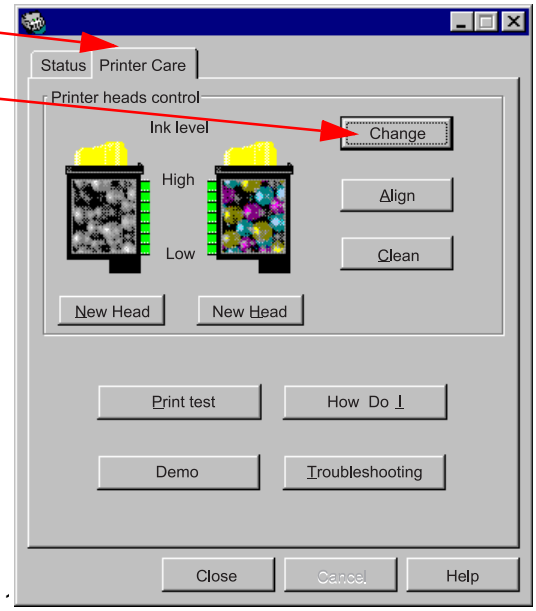

4. Open the printer lid, sliding it leftwards.

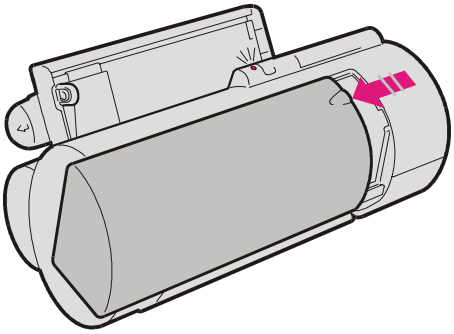

5. Unlatch the print head, pushing on the latching lever (**1, 2**). Extract the print head, pulling it upwards (3).

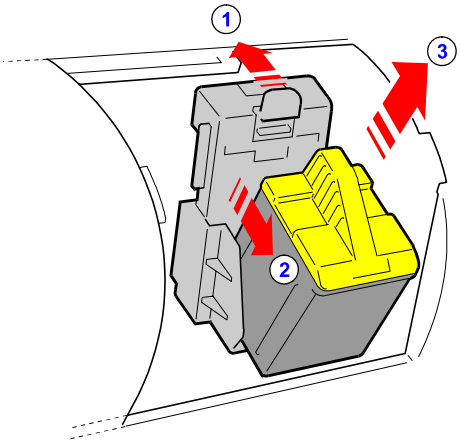

6. Remove the new print head from the package.
7. Gently remove the protective sticker from the print head nozzles and electrical contacts.

   Take care not to touch the electrical contacts (gold plate) or the printing nozzles, and do not set the print head down on them.

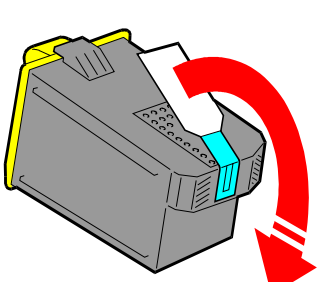

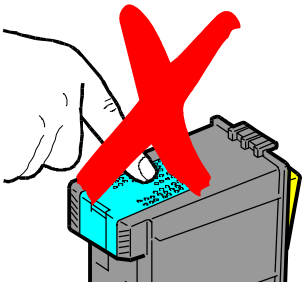

8. Insert the print head in its support (**1**) and snap it in (**2**): you will hear a clicking sound. Close the printer lid, sliding it rightwards until it stops.

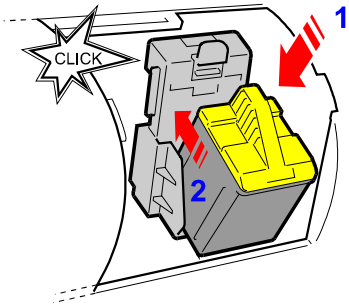

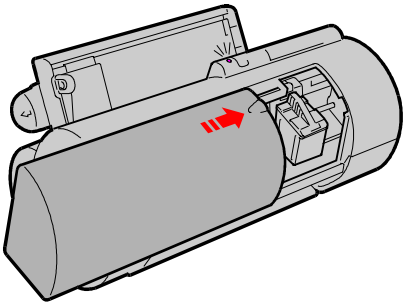

Having installed the print head, the printer executes an initialization cycle that takes about **two minutes**.

9. To obtain the best printing quality, never forget to **align the print head** (see also **Completing print head installation**).

Completing Print Head Installation

After installing a new print head, you always need to "notify" the printer's software, to obtain the **best possible print quality** and an **actual representation** of ink level in the Printer Monitor **Printer Care tab**.

To complete print head installation:

1. Open the Printer Monitor **Printer Care tab** (see **Opening the Printer Monitor**).
2. Click on the **Printer Care tab**.
3. Select the **New Head** button for the installed print head (the colour one in this case).

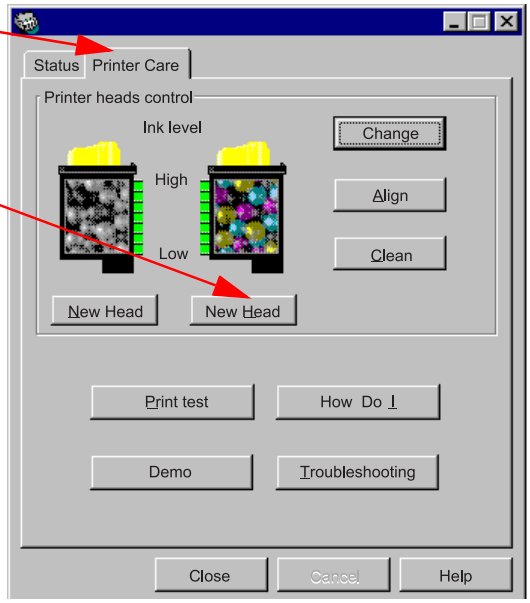

4. Run the **Print Head Alignment** procedure (**see below**).

Print Head Alignment

The print head (black or colour) only **needs to be aligned when installed for the first time**.

However, you can repeat the alignment operation to improve print quality, when it is no longer satisfactory.

To align the print head:

1. Open the Printer Monitor **Printer Care tab** (see **Opening the Printer Monitor**).
2. Load at least two sheets of paper into the printer (see **Paper Loading**).
3. Click on the **Printer Care tab**.
4. Click on the **Align** button.

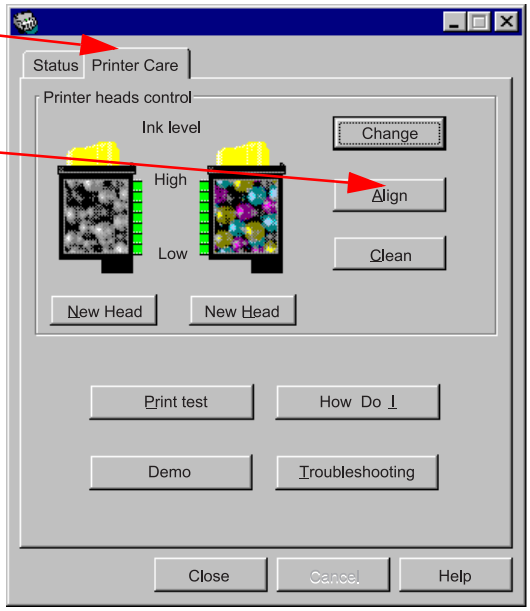

5. A confirmation message is displayed. Click on OK and follow the instructions displayed on the tab.

   (A series of three vertical bars - each marked by a number - is printed.

   You need to choose the number corresponding to the three vertical bars with the best alignment and type in the proposed dialogue box.

   The result of the alignment is then printed.)

Print Head Care and Preservation

- Keep the print heads in their sealed package until you need to use them.
- Before inserting the print head, remember to remove the protecting sticker.
- Take care not to get any ink on your clothes, because the ink is indelible.

DO NOT attempt to recharge the print head with ink: this would **certainly damage** the print head and the printer.

- Do not shake the print head. If print quality is unsatisfactory, perform the cleaning operations described in the **Cleaning the Print Head** section.

Cleaning the Print Head

The print head is automatically cleaned at regular intervals when the printer is on. This operation keeps the print head's nozzles unclogged, to guarantee proper ink flow.

The automatic nozzle cleaning operation may fail to assure a satisfactory print quality and the two following cases may occur:

1. missing dots or whole lines (characters and graphs not fully printed out), due to the clogging of some print head nozzles
2. presence of ink streaks that "dirty" the printe pages, due to the accumulation of small quantities of dust inside the printer.

In the first case (which could occur occasionally after the printer has been inactive for a rather long time), the problem can be solved with the **Print Head Nozzle Cleaning** operation using the **Clean** function of the **Printer Care tab**.

In the second case, manually cleaning **the print head's nozzles and electrical contacts, and/or the electrical contacts of the print-head carriage**, can eliminate the problem.

See also **Print Head Care and Preservation**.

Cleaning the Print Head Nozzles

To clean the print head nozzles through the **Clean** function of the **Printer Care tab**:

1. Open the Printer Monitor **Printer Care tab** (see **Opening the Printer Monitor**).

2. Click on the **Printer Care tab**.

3. Click on the **Clean** button.

   The printer runs the print head cleaning cycle: you will hear the sound of the print head carriage moving.

4. If you want to, at this point you can run the **Print Test** (see related section), to check whether all nozzles are clean.
   If the nozzles are not yet clean, repeat the cleaning operation.

5. If, after various attempts to clean the nozzles, print quality is still not satisfactory, remove the print head from the printer, reinstall it and repeat the nozzle cleaning cycle.

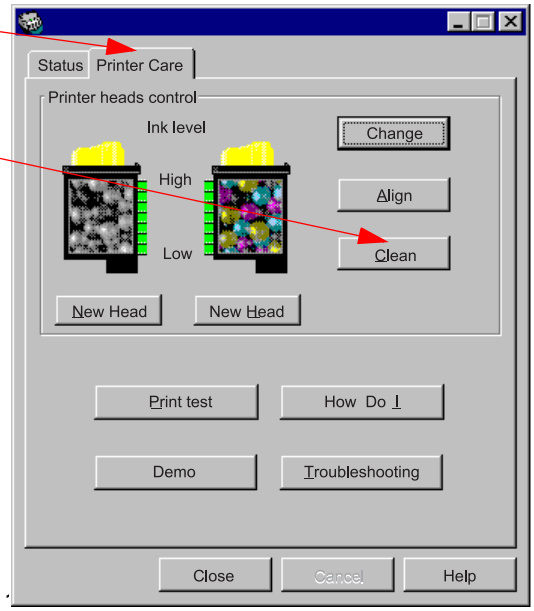

Manually Cleaning Print Head Nozzles and Electrical Contacts

1. Following the procedure described in **Replacing the Print Head**, unlatch and extract the print head to be cleaned.
2. To clean the nozzles, moisten a paper tissue with distilled water and drain any excess liquid.

   Keeping the print head with the nozzles facing downwards, tap it on the tissue pressing gently.

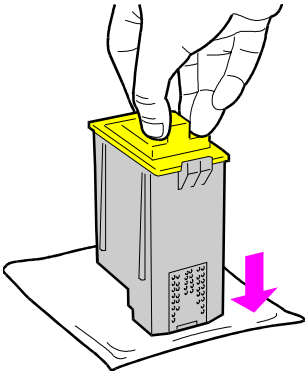

3. Repeat the operation several times in different places on the tissue to clean the nozzles.

   To loosen any ink clots, keep the moist tissue in contact with the nozzle area for a few seconds. Then dry by tapping lightly.
4. Now clean the print head electrical contacts, using a lint-free cloth, moistened with water. Wipe gently.

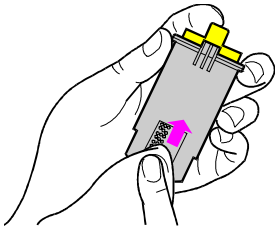

5. Reinsert the print head in the printer and shut the cover.
6. Repeat the **Print Test**.

This cleaning operation MUST NOT be repeated systematically as it could damage the print head. It should be considered SOLELY as a last resort before replacing the COMPLETE print head.

Cleaning the Print Head Carriage Electrical Contacts

If print quality is still not satisfactory even after the print head cleaning operations, clean also the electrical contacts of the print head carriage.

1. Following the procedure described in **Replacing the Print Head**, unlatch and extract the print head from the carriage.
2. Disconnect the printer's power cord.

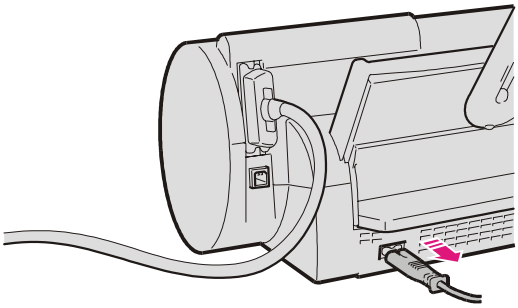

3. Clean the print head carriage contacts, using a clean, dry cloth. Wipe gently.

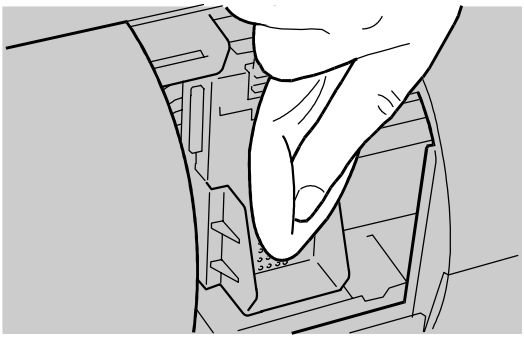

4. Reinsert the print head in the printer and shut the lid.

If print quality is still unsatisfactory even after this last cleaning operation, replace the print head.

Print Test from Printer Monitor

To run the print test from the Printer Monitor **Printer Care tab**:

1. Open the Printer Monitor **Printer Care tab** (see **Opening the Printer Monitor**).

2. Click on the **Printer Care tab**.

3. Click on the **Print test** button.

   The printer feeds a sheet of paper and prints the nozzle test graph, a series of horizontal lines, each printed by the corresponding print head nozzle.

4. Examine the nozzle test graph. Ensure that the lines have no breakes. A broken line indicates that the corresponding nozzles are clogged.

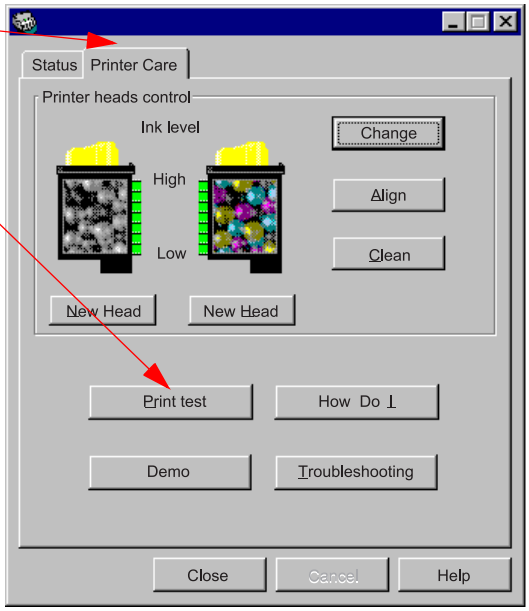

If the nozzles are clogged, you can run the **Cleaning Print Head Nozzles** procedure (see related section).

Printing on Common Paper

Loading the Paper

Paper can be loaded:

1. **in the automatic feeder**: you can load up to 50 sheets of ordinary paper
2. **in the manual feeder**: you can use this option or insert a single sheet. The sheet inserted in this feeder takes precedence over those present in the automatic feeder

Loading the Paper in the Automatic Feeder

1. Pull the paper support fully rightward and rotate it to the vertical position.

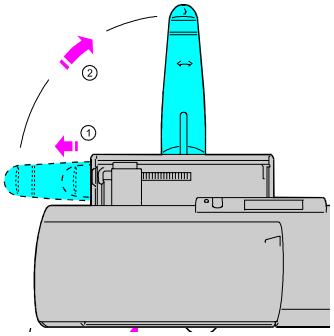

The paper support is optimised for standard A4 and Letter paper formats

2. Move the side guide of the automatic feeder fully leftward, keeping its lock pressed between your thumb and index finger.

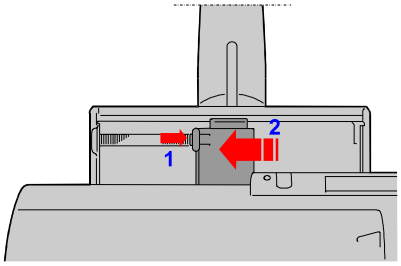

3. Carefully line up the sheets to be loaded.

4. Align the sheets to the right along the fixed line and carefully insert them into the feeder until they stop inside the printer.

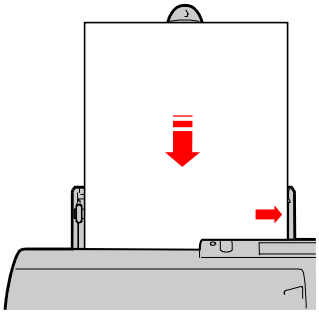

5. Keeping the lock of the moving guide pressed between your thumb and index finger, move it closer to the left edge of the sheets, without blocking them.

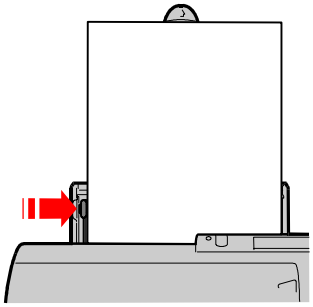

Printer Settings

Check printer settings:

1. Open **Printer Properties**, following the instructions of the **Opening Printer Properties** section.
2. Check the values of the set parameters.

   If you are colour printing on A4 size paper, the optimal parameter values are the default values, so just click on **Restore Defaults (*)**.
3. Click on the **OK** button.
4. Start printing your document.

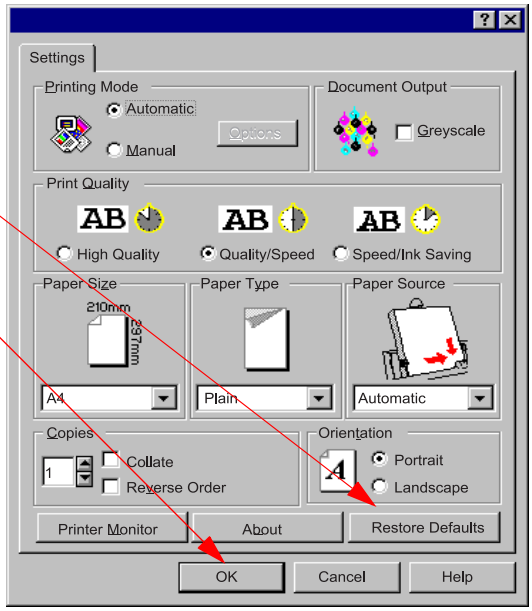

(*) If you restore the default values of the parameters, the **Print Quality Speed/Ink Saving** is set together with **Reverse Order** for the **Copies** printed.

Loading the Paper in the Manual Feeder

If you need to insert a series of sheets manually:

1. Ensure that **Manual feeding** is selected in the **Settings tab** of the printer driver:
   - Open **Printer Properties**, following the instructions of the **Opening Printer Properties** section.

- Select **Manual feeding**.
- Click on the **OK** button.

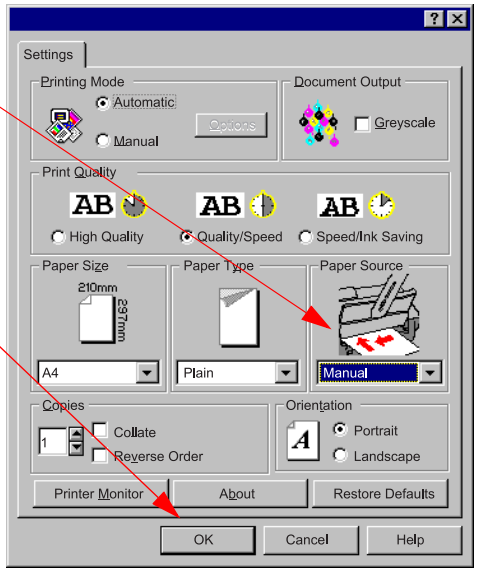

2. Start printing your document.

3. A message in the **Printer Monitor** mode indicates that there is no paper and the printer indicator LED is blinking (more paper required).

   Load the paper ensuring that the sheet is perfectly positioned against the side guide and against the driving rollers.

   Push it in until it is "caught" by the printer.

If you want to use the manual feeder **for a single sheet**, when **Automatic feeding** is set, simply run the print job after loading the sheet (following the procedure described above).

Printing on Other Supports

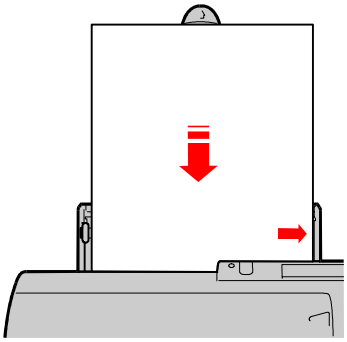

The printer can use different types of print supports, with different formats.

This chapter described the following procedures:

- **Printing on photographic paper**, to obtain excellent quality photographs, customised calendars, certificates, artistic graphics
- **Printing on transparent paper**, to make outstanding presentations with an overhead projector
- **Printing on glossy paper** to obtain prints with vivid, brilliant and clearly distinguished colours, of photographic quality
- **Printing on coated paper**, to obtain high quality colour images, "computer art"
- **Printing transfers**, to obtain transfers for tee shirts, mouse pads, umbrellas
- **Printing envelopes**, to be loaded into the automatic feeder for address printing
- **Printing cards of various kinds**, for season's greetings, place holders, menus, wine lists, folders
- **Printing on customised paper formats**, if you want to print on non-standard paper formats
- **Printing on banners**, to obtain panoramic photographs, calendars, coloured ornaments.

Printing on Photographic Paper

1. Load up to 5 sheets of photographic paper in the automatic feeder, aligning them to the right against the fixed guide.

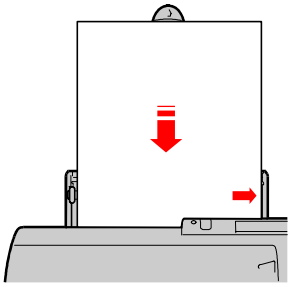

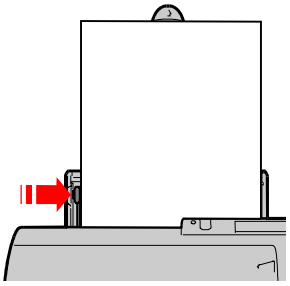

2. Ensure that photographic paper parameters are selected in the Settings tab of the printer driver:
   - Open **Printer properties**, following the instructions of the **Opening Printer Properties** section.

- Select **Photographic Paper Type**.

- Click on the **OK** button of the **Settings tab**.

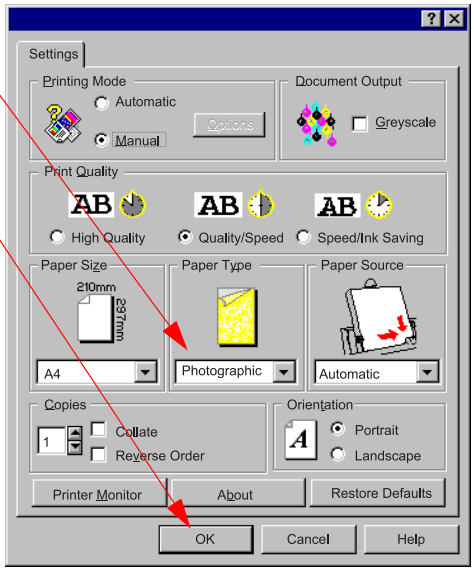

3. Start printing your document.

Remove the document before printing other copies, or other types of documents, and let it dry thoroughly aside, for best print quality.

Printing on Transparent Paper

1. Load up to 5 sheets of **transparent** paper in the automatic feeder, aligning it to the right against the fixed guide.

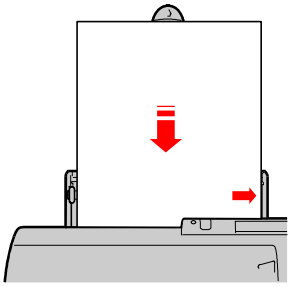

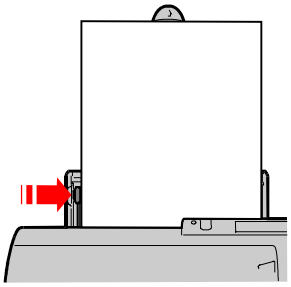

2. Ensure that transparent paper parameters are set in Settings tab of the printer driver:
   - Open **Printer properties**, following the instructions of the **Opening Printer Properties** section.

- Select **Transparent Paper Type**.

- Click on the **OK** button of the **Settings tab.**

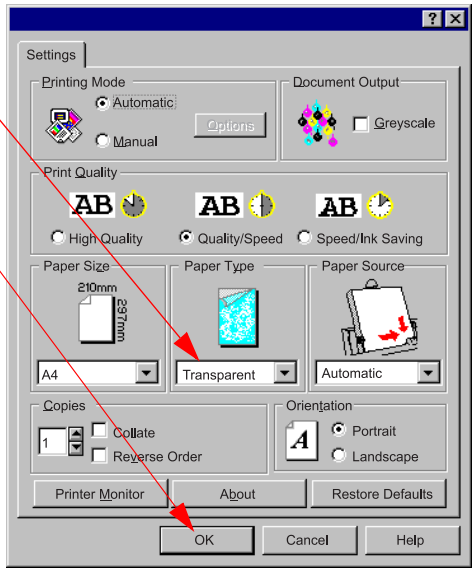

3. Start printing your document.

Remove the document before printing other copies, or other document types, and let it dry thoroughly aside, for best print quality.

Printing on Coated Paper

1. Load up to 30 sheets of **coated** paper in the automatic feeder, aligning them to the right against the fixed guide.

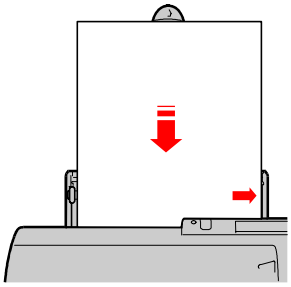

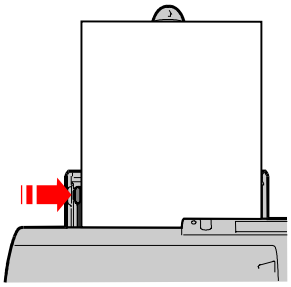

2. Ensure that coated paper parameters are set in the Settings tab of the printer driver:
   - Open **Printer properties**, following the instructions in the **Opening Printer Properties** section.

- Select **Coated Paper Type**.

- Click on the **OK** button of the **Settings tab.**

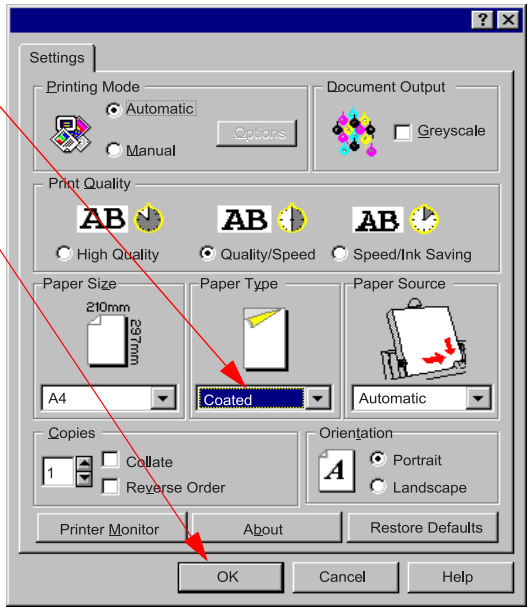

3. Start printing your document.

Remove the document before printing other copies, or other document types, and let it dry thoroughly aside, for best print quality.

Printing on Glossy Paper

1. Load up to 5 sheets sheet of **glossy** paper into the automatic feeder, aligning them to the right against the fixed guide.

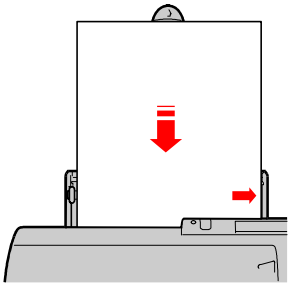

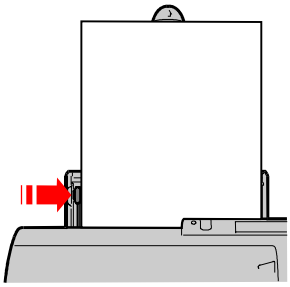

2. Ensure that glossy paper parameters are set in the Settings tab of the printer driver:
   - Open **Printer properties**, following the instructions of the **Opening Printer Properties** section.

- Select **Glossy Paper Type**.

- Click on the **OK** button of the **Settings tab**.

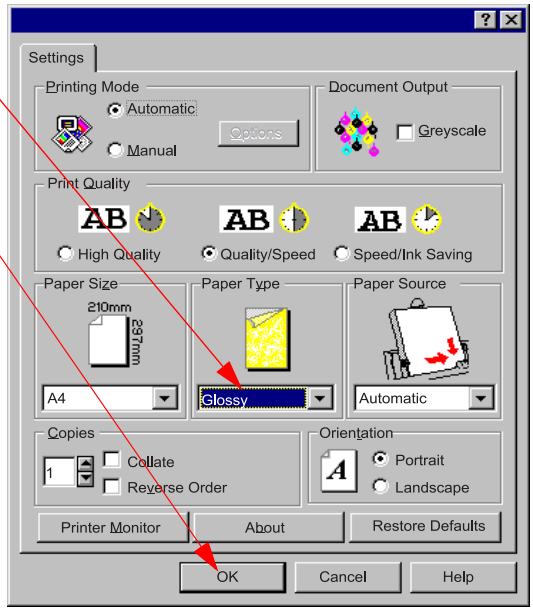

3. Start printing your document.

Remove the document before printing other copies, or other document types, and let it dry thoroughly aside, for best print quality.

Printing on Tee Shirt Transfers

You can print images on cloth, with hot transfer from a special print support. Request hot transfer paper from your retailer or purchase it in the best office or computer supply stores.

1. Load a transfer into the manual feeder.
   Ensure that the transfer is perfectly aligned in between the side guide and against the driving rollers.
   Push it all the way in until it is "caught" by the printer.

   The side to be printed must face upwards.

2. Ensure that transfer parameters are selected in the Settings tab of the printer driver:
   - Open **Printer properties**, following the instructions of the **Opening Printer Properties** section.

- Select **Manual Paper Source**.
- Select **Transfer Paper Type**.
- Click on the **OK** button of the **Settings tab**.

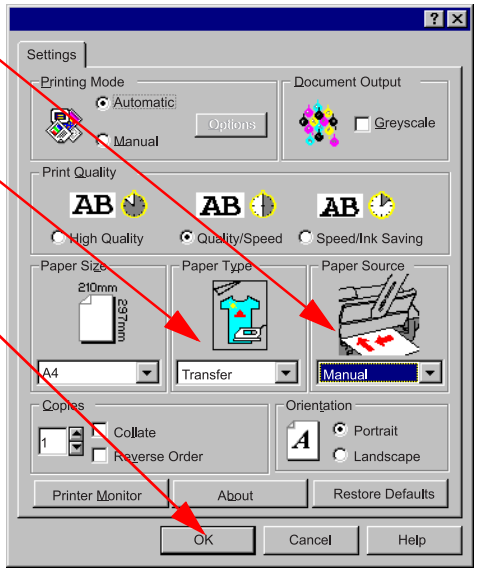

3. Start printing.

4. Transfer the image onto the tee shirt, following the instructions enclosed with the transfers.

Printing Envelopes

1. Load up to five **envelopes** in the automatic feeder, aligning them to the right with the longer side against the fixed guide (the envelope closing edge must be oriented down and to the left).

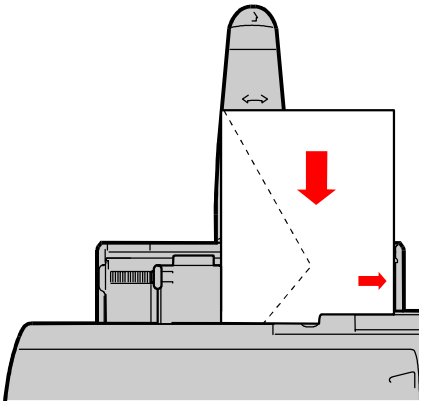

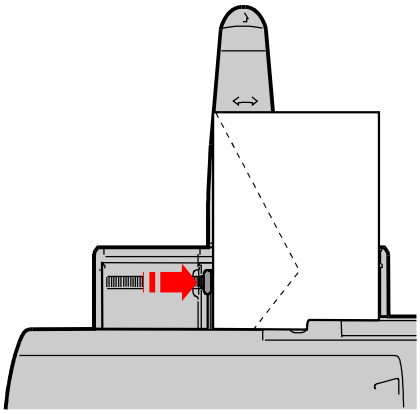

2. Ensure that envelope parameters are selected in the Settings tab of the printer driver:
   - Open **Printer properties**, following the instructions of the **Opening Printer Properties** section.

- Select your **Envelope Format**.

  Paper type changes automatically from the previously set one to that of the envelopes.

- Click on the **OK** button of the **Settings tab.**

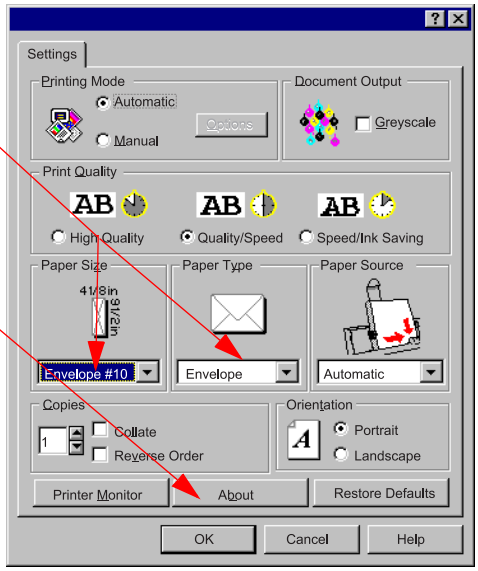

3. Start printing your envelope(s).

Printing Cards

1. Load up to ten **cards** into the automatic feeder, aligning them to the right with the longer side against the fixed guide.

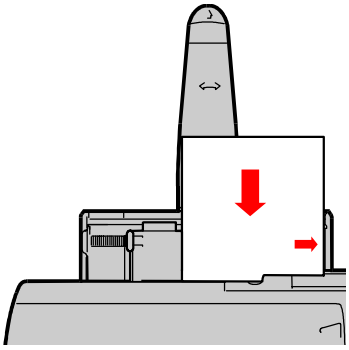

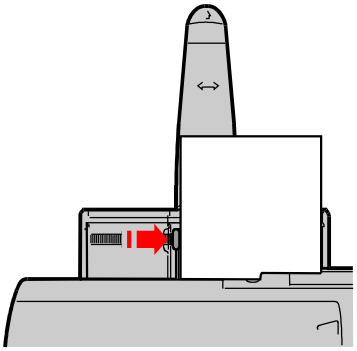

2. Ensure that card parameters are selected in the Settings tab of the printer driver:
   - Open **Printer properties**, following the instructions of the **Opening Printer Properties** section.

- Select your **card**'s **Paper Size**.

- Click on the **OK** button of the **Settings tab.**

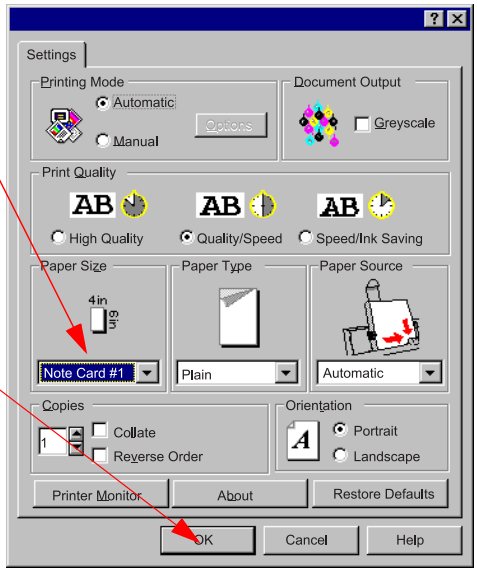

3. Start printing your card(s).

Printing on Customised Paper Sizes

1. Load up to 50 sheets of ordinary paper in the automatic feeder, aligning it to the right against the fixed guide.

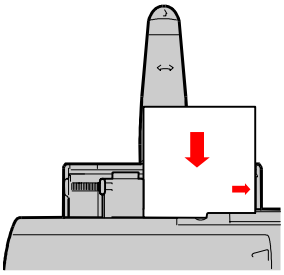

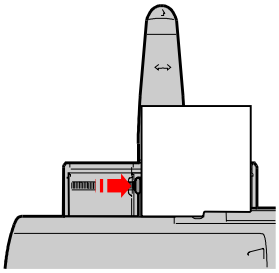

2. In the Settings tab of the printer driver select the parameters for the customised paper size.
   - Open **Printer properties**, following the instructions of the **Opening Printer Properties** section.
   - Open the list of paper sizes by clicking on the box.
   - Click on the **User Defined** size.

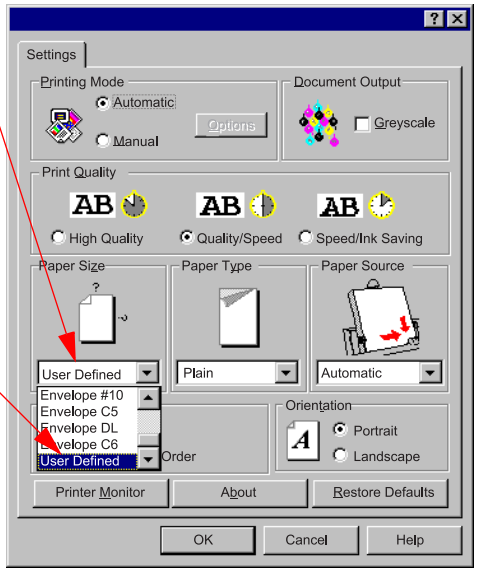

   - The dialogue box shown here will open.

   Type the width and height for your paper size.

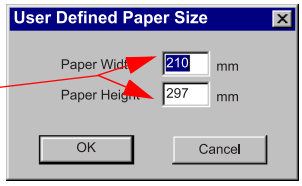

3. Click on the OK button of the Settings tab.

Printing on Banners

The printer can handle continuous paper up to a length of one and a half meters (max 5 A4 sheets). However, in order to use the banners properly, your application must be able to handle them too.

1. Ensure that banner parameters are selected in the Settings tab of the printer driver, and specifically:
   - Open **Printer properties**, following the instructions of the **Opening Printer Properties** section.

- Select **Banner** Paper Source.
- Click on the **OK** button of the **Settings tab.**

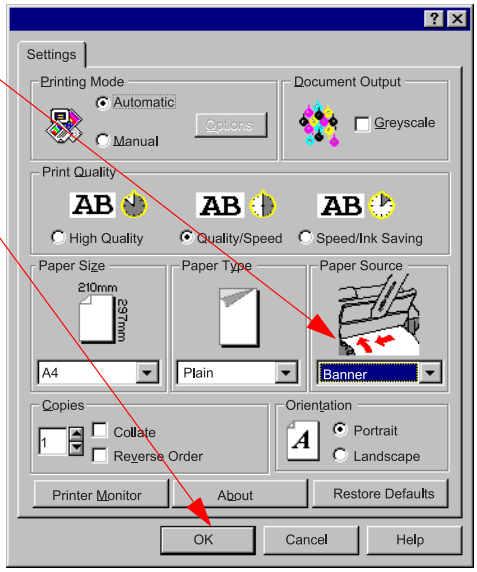

2. Ready the continuous feed paper to be inserted into the printer:
   - From the paper ream, rip out the number of sheets required to print the banner (up to 5 A4 size sheets).
   - Tear away the perforated side strips, if there are any.
   - Separate the sheets so as to prevent possible jams in the printer.

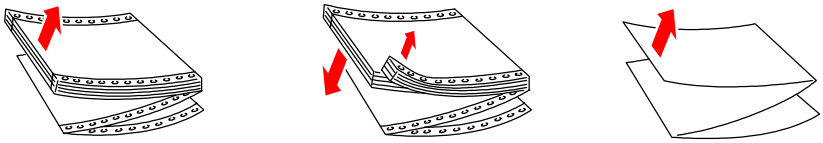

3. Insert the starting edge of the banner into the manual feeder.
   Ensure that the banner is perfectly aligned between the side guide and against the driving rollers.
   Push it all the way in until it is "caught" by the printer.

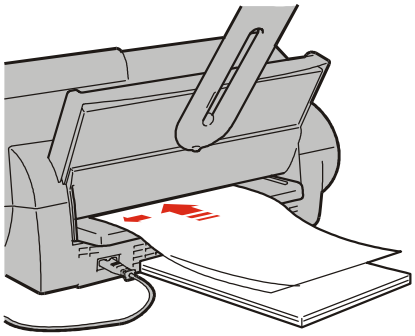

Il nome file non è valido. The side of the banner to be printed is the one facing upwards.

4. Start printing your banner.

Continuous form printing takes a long time; it will require several minutes to complete.

Consumables

Olivetti consumables can be purchased in your local point of sale or from authorised Olivetti dealer nearest you.

For information about accessories, you can call Olivetti Lexicon dealers directly, in individual countries.

Print Heads

Print heads can be ordered with the following part numbers:

Type	Part number
XP11: black single-block print head, normal capacity	B0288 Q
XP01: black siingle-block print head, high capacity	B0217 G
XP13: 4-colour single-block print head, normal capacity	B0315 A
XP03: 4-colour single-block print head, high capacity	B0261 L

We recommend you order the **Garage** (print head container for periods of disuse) code B0251 J together with the print heads.

Print Supports

In order to obtain the best printing quality, both colour and black and white, use the print supports that can be ordered with the following part numbers:

Type	Part number
Olivetti Lexikon common paper	B0187 T
Olivetti Lexikon JP High Resolution coated paper	B0093 Y
Olivetti Lexikon JP Premium High Resolution coated paper	B0249 Y
Olivetti Lexikon JP High Resolution Transparencies	B0036 W
Olivetti Lexikon Photo Glossy (polyester) paper	B0035 V
Olivetti Lexikon JP Premium paper	B0090 H
Olivetti Lexikon JP Iron-on transfers	B0094 Z
Olivetti Lexikon sticker labels	B0185 Z
Olivetti Lexikon Business Cards	B0177 G
Olivetti Lexikon Greeting Cards	B0175 E
Olivetti Lexikon audio cassette cards	B0176 F

Technical Specifications

Printing Technique
Bubble ink jet, with waterproof ink.

Print Head
- 4-colour
- black

Printing Speed
Up to 7 pages per minute (ppm) with black ink print head, depending on the print mode, the application program and/or computers used.

Paper Handling
Automatic (Automatic sheet feeder)
Manual

Automatic Feeder Capacity

- up to 50 sheets with 80 g/m^2 weight
- up to 30 sheets of coated paper
- up to 10 cards with 100 g/m^2 weight
- 1 sheet with weight > 90 g/m^2
- up to 5 sheets of glossy paper
- up to 5 transparent sheets
- up to 5 sheets of photographic paper
- up to 5 envelopes with 80 g/m^2 weight

Paper Types for Automatic Feeder:

- allowed ordinary paper:64-120 g/m^2
  recommended ordinary paper:70-90 g/m^2
- allowed envelopes:75-100 g/m^2
  recommended envelopes:80 g/m^2
- allowed note cards:100-200 g/m^2
  recommended note cards:100-135 g/m^2
- allowed continuous forms:70-80 g/m^2
  recommended continuous forms:75 g/m^2
- Allowed transparencies (thickness):90-125 µm
  Recommended transparencies (thickness):100-120 µm
- Iron-on transfers (for Tee shirts)

Paper Sizes:

Individual Sheets:
A4 (210 mm x 297 mm)
A5 (148.5 mm x 210 mm)
Letter (216 mm x 279.4 mm)
Legal (216 mm x 355.6 mm)
Executive (184 mm x 267 mm)

Cards:
101,6 mm x 152.4 mm
127 mm x 203.2 mm
A6 (105 mm x 148.5 mm)

Envelopes:
C5 (162 mm x 228.6 mm)
US C#10 (104.7 mm x 241.3 mm)
C6 (114 mm x 162 mm)
B5 (176 mm x 250 mm)
B6 (125 mm x 176 mm)
DL (110 mm x 220 mm)

Print Supports:

Ordinary paper
Special photographic paper
Glossy paper
Coated paper
Hot transfers for tee shirts
Envelopes

Electrical Data:

- 115 - 120 V +/- 10%; 50-60 Hz
- 220-240 V +6% -10%; 50-60 Hz

Sheet width:

- automatic feeder : 216 mm max
- manual feeder: 218 mm max

Graphic density:

High quality: up to 1200 x 1200 dpi
Quality / Speed: 600 x 600 dpi
Speed / Savings: 300 x 600 dpi

Interface:

Parallel (Centronics) and USB (Universal Serial Bus)

Environmental Operating Conditions:

Temperature: 15 to 35 °C
Relative humidity: 20%-80%

Physical characteristics:

Printer in operating condition:
Height:
Width:
Depth:
Weight:

Print driver:

Operation in Windows 3.1x/95/98/2000/NT operating system

Noise levels:

46 dB (High quality)

Product certification:

USA and Canada:

Safety Standards Compliance:
cCSAus

Electromagnetic Compatibility:
FCC part 15 Class B Certified

EU:

Safety Standards Compliance:
- CE
- EN 60950 + A1, A2, A3, A4
- GS-TÜV

Electromagnetic Compatibility:
- CE
- EN 55022 Class B
- EN 50082-1 1997
- EN 61000-3-2