SAR Test Report

FCC Rule Part	:	**CFR §2.1093**
Standards	:	**IEEE Std 1528:2013, KDB 865664 D01 v01r04, KDB 865664 D02 v01r02, KDB 447498 D01 v06, KDB 616217 D04 v01r02**
Report No.	:	**SFBEDV-WTW-P26040403**
Applicant	:	**Dell Inc.**
Address	:	**One Dell Way, Round Rock, Texas 78682, USA**
Product	:	**RFID 13.56MHz Wireless Module**
FCC ID	:	**E2K-DWRFID2601**
Brand	:	**DELL**
Model No.	:	**DWRFID2601**
Sample Received Date	:	**Apr. 15, 2026**
Date of Testing	:	**Apr. 27, 2026**
Lab Address	:	**No. 47-2, 14th Ling, Chia Pau Vil., Lin Kou Dist., New Taipei City, Taiwan**
Test Location	:	**No. 19, Hwa Ya 2nd Rd., Wen Hwa Vil., Kwei Shan Dist., Taoyuan City, Taiwan**
FCC Accredited No.	:	**TW0003**

CERTIFICATION: The above equipment have been tested by **Bureau Veritas Consumer Products Services (H.K.) Ltd., Taoyuan Branch–Lin Kou Laboratories**, and found compliance with the requirement of the above standards. The test record, data evaluation & Equipment Under Test (EUT) configurations represented herein are true and accurate accounts of the measurements of the sample's SAR characteristics under the conditions specified in this report. It should not be reproduced except in full, without the written approval of our laboratory. The client should not use it to claim product certification, approval, or endorsement by TAF or any government agencies.

Prepared By : Lena Wang

Lena Wang / Specialist

Approved By : Gordon Lin

Gordon Lin / Manager

This report is governed by, and incorporates by reference, the Conditions of Testing as posted at the date of issuance of this report at http://www.bureauveritas.com/home/about-us/our-business/cps/about-us/terms-conditions/ and is intended for your exclusive use. Any copying or replication of this report to or for any other person or entity, or use of our name or trademark, is permitted only with our prior written permission. This report sets forth our findings solely with respect to the test samples identified herein. The results set forth in this report are not indicative or representative of the quality or characteristics of the lot from which a test sample was taken or any similar or identical product unless specifically and expressly noted. Our report includes all of the tests requested by you and the results thereof based upon the information that you provided to us. Measurement uncertainty is only provided upon request for accredited tests. Statements of conformity are based on simple acceptance criteria without taking measurement uncertainty into account, unless otherwise requested in writing. You have 60 days from date of issuance of this report to notify us of any material error or omission caused by our negligence or if you require measurement uncertainty; provided, however, that such notice shall be in writing and shall specifically address the issue you wish to raise. A failure to raise such issue within the prescribed time shall constitute your unqualified acceptance of the completeness of this report, the tests conducted and the correctness of the report contents.

Table of Contents

Release Control Record **3**
1. Test Reference Guidance **4**
2. Summary of Maximum SAR Value **4**
3. Description of Equipment Under Test **5**
4. SAR Measurement System **6**
4.1 Definition of Specific Absorption Rate (SAR) 6
4.2 SPEAG DASY6 System 6
4.2.1 Robot 7
4.2.2 Probes 8
4.2.3 Data Acquisition Electronics (DAE) 8
4.2.4 Phantoms 8
4.2.5 Device Holder 9
4.2.6 System Validation Dipoles 10
4.2.7 Power Source 10
4.2.8 Tissue Simulating Liquids 11
4.3 SAR System Verification 13
4.4 SAR Measurement Procedure 15
4.4.1 Area Scan and Zoom Scan Procedure 15
4.4.2 Volume Scan Procedure 16
4.4.3 Power Drift Monitoring 17
4.4.4 Spatial Peak SAR Evaluation 17
4.4.5 SAR Averaged Methods 17
5. SAR Measurement Evaluation **18**
5.1 EUT Configuration and Setting 18
5.2 EUT Testing Position 18
5.2.1 Body Exposure Conditions 18
5.3 Tissue Verification 19
5.4 System Validation 19
5.5 System Verification 19
5.6 Maximum Output Power 19
5.6.1 Maximum Target Conducted Power 19
5.6.2 Measured Conducted Power Result 19
5.7 SAR Testing Results 20
5.7.1 SAR Test Reduction Considerations 20
5.7.2 SAR Results for Body Exposure Condition (Test Separation Distance is 0 mm) 20
5.7.3 SAR Measurement Variability 20
5.7.4 Simultaneous Multi-band Transmission Evaluation 20
6. Calibration of Test Equipment **21**
7. Measurement Uncertainty **22**
8. Information of the Testing Laboratories **23**

Appendix A. Plots of SAR System Verification
Appendix B. Plots of SAR Measurement
Appendix C. Tissue & System Verification
Appendix D. Maximum Target Conducted Power
Appendix E. Measured Conducted Power Result
Appendix F. SAR Test Result
Appendix J. Calibration of Test Equipment List
Appendix Z. Calibration Certificate for Probe and Dipole

Release Control Record

Report No.	Reason for Change	Date Issued
SFBEDV-WTW-P26040403	Initial release	May 18, 2026

1. Test Reference Guidance

FCC Rule Part	:	**CFR §2.1093**
Measurement procedure	:	**IEEE Std 1528:2013, KDB 865664 D01 v01r04, KDB 865664 D02 v01r02, KDB 447498 D01 v06, KDB 616217 D04 v01r02**

2. Summary of Maximum SAR Value

Equipment Class	Mode	Highest SAR_{1g} Body Tested at 0 mm (W/kg)
DXX	**RFID**	**0.00**

Note:

1. The SAR criteria **(Head & Body: SAR-1g1.6 W/kg, and Extremity: SAR-10g 4.0 W/kg)**for general population/uncontrolled exposure is specified in FCC 47 CFR part 2 (2.1093) and ANSI/IEEE C95.1-1992.

Test Reference Guidance: IEEE C95.1:1992

3. Description of Equipment Under Test

EUT Type	RFID 13.56MHz Wireless Module
FCC ID	E2K-DWRFID2601
Brand Name	DELL
Model Name	DWRFID2601
Tx Frequency Bands (Unit: MHz)	RFID : 13.56
Uplink Modulations	RFID : ASK
Antenna Type	Refer to note
EUT Stage	Engineering Sample

Note:

1. The EUT is authorized for use in specific End-product. Please refer to below for more details.

Product	Brand	Model
Notebook Computer	DELL	P211G

2. The antenna information is listed as below.

Antenna Manufacturer	Antenna Model No.	Antenna Type	Antenna Gain (dBi)	Connector Type
HongBo	1415-0BHR0DE	Loop Antenna	N/A	N/A

3. The above EUT information is declared by manufacturer and for more detailed features description please refers to the manufacturer's specifications or User's Manual.

4. SAR Measurement System

4.1 Definition of Specific Absorption Rate (SAR)

SAR is related to the rate at which energy is absorbed per unit mass in an object exposed to a radio field. The SAR distribution in a biological body is complicated and is usually carried out by experimental techniques or numerical modeling. The standard recommends limits for two tiers of groups, occupational/controlled and general population/uncontrolled, based on a person's awareness and ability to exercise control over his or her exposure. In general, occupational/controlled exposure limits are higher than the limits for general population/uncontrolled.

The SAR definition is the time derivative (rate) of the incremental energy (dW) absorbed by (dissipated in) an incremental mass (dm) contained in a volume element (dv) of a given density (ρ).The equation description is as below:

$$\mathbf{SAR} = \frac{\mathbf{d}}{\mathbf{dt}}\left(\frac{\mathbf{dW}}{\mathbf{dm}}\right) = \frac{\mathbf{d}}{\mathbf{dt}}\left(\frac{\mathbf{dW}}{\boldsymbol{\rho}\mathbf{dv}}\right)$$

SAR is expressed in units of Watts per kilogram (W/kg)

SAR measurement can be related to the electrical field in the tissue by

$$\mathbf{SAR} = \frac{\boldsymbol{\sigma}|\mathbf{E}|^2}{\boldsymbol{\rho}}$$

Where: σ is the conductivity of the tissue, ρ is the mass density of the tissue and E is the RMS electrical field strength.

4.2 SPEAG DASY6 System

DASY6 system consists of high precision robot, probe alignment sensor, phantom, robot controller, controlled measurement server and near-field probe. The robot includes six axes that can move to the precision position of the DASY6 software defined. The DASY6 software can define the area that is detected by the probe. The robot is connected to controlled box. Controlled measurement server is connected to the controlled robot box. The DAE includes amplifier, signal multiplexing, AD converter, offset measurement and surface detection. It is connected to the Electro-optical coupler (EOC). The EOC performs the conversion form the optical into digital electric signal of the DAE and transfers data to the PC.

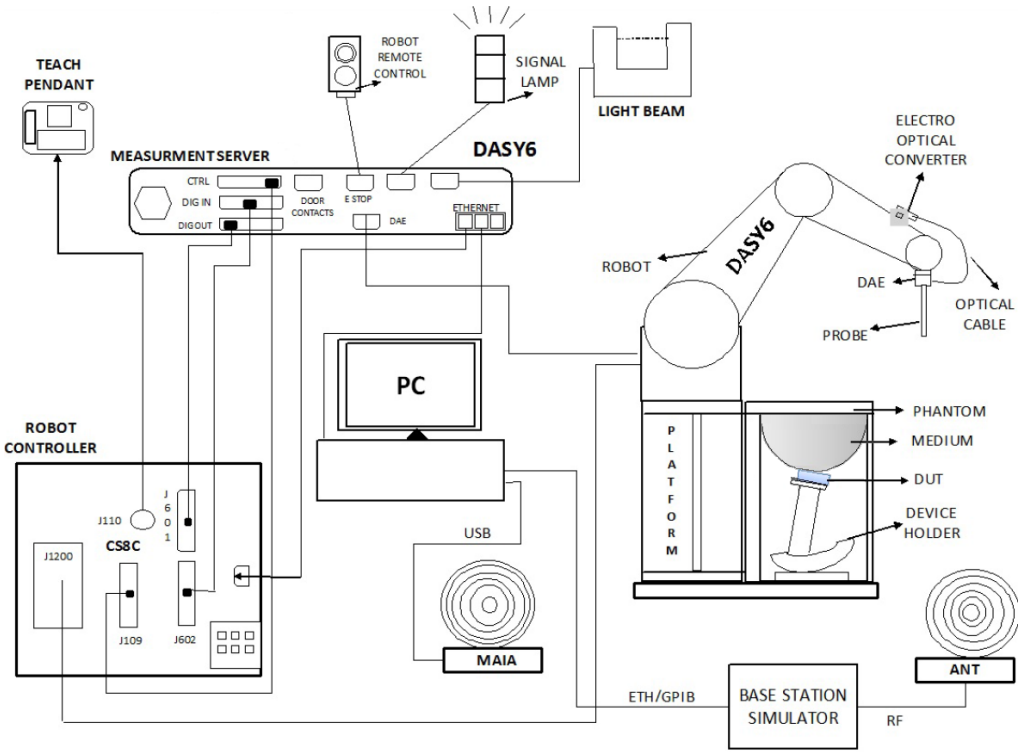

Fig-4.1 SPEAG DASY6 System Setup

4.2.1 Robot

The DASY6 systems use the high precision robots from Stäubli SA (France). For the 6-axis controller system, the robot controller version of CS8c from Stäubli is used. The Stäubli robot series have many features that are important for our application:

- High precision (repeatability ±0.035 mm)
- High reliability (industrial design)
- Jerk-free straight movements
- Low ELF interference (the closed metallic construction shields against motor control fields)

Fig-4.2 SPEAG DASY6 System

4.2.2 Probes

The SAR measurement is conducted with the dosimetric probe. The probe is specially designed and calibrated for use in liquid with high permittivity. The dosimetric probe has special calibration in liquid at different frequency.

Model	EX3DV4	
Construction	Symmetrical design with triangular core. Built-in shielding against static charges. PEEK enclosure material (resistant to organic solvents, e.g., DGBE).	
Frequency	4 MHz to 10 GHz Linearity: ± 0.2 dB	
Directivity	± 0.1 dB in TSL (rotation around probe axis) ± 0.3 dB in TSL (rotation normal to probe axis)	
Dynamic Range	10 μW/g to 100 mW/g Linearity: ± 0.2 dB (noise: typically < 1 μW/g)	
Dimensions	Overall length: 337 mm (Tip: 20 mm) Tip diameter: 2.5 mm (Body: 12 mm) Typical distance from probe tip to dipole centers: 1 mm	

4.2.3 Data Acquisition Electronics (DAE)

Model	DAE3, DAE4	
Construction	Signal amplifier, multiplexer, A/D converter and control logic. Serial optical link for communication with DASY embedded system (fully remote controlled). Two step probe touch detector for mechanical surface detection and emergency robot stop.	
Measurement Range	-100 to +300 mV (16 bit resolution and two range settings: 4mV, 400mV)	
Input Offset Voltage	< 5μV (with auto zero)	
Input Bias Current	< 50 fA	
Dimensions	60 x 60 x 68 mm	

4.2.4 Phantoms

Model	SAM-Twin Phantom	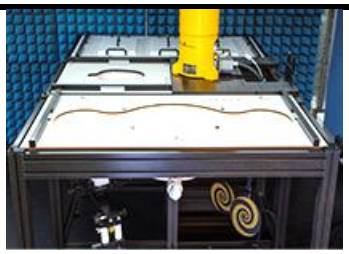
Construction	The shell corresponds to the specifications of the Specific Anthropomorphic Mannequin (SAM) phantom defined in IEEE Std 1528 and IEC 62209-1. It enables the dosimetric evaluation of left and right hand phone usage as well as body-mounted usage at the flat phantom region. A cover prevents evaporation of the liquid. Reference markings on the phantom allow the complete setup of all predefined phantom positions and measurement grids by teaching three points with the robot.	
Material	Vinylester, fiberglass reinforced (VE-GF)	
Shell Thickness	2 ± 0.2 mm (6 ± 0.2 mm at ear point)	
Dimensions	Length: 1000 mm Width: 500 mm Height: adjustable feet	
Filling Volume	approx. 25 liters	

Model	ELI	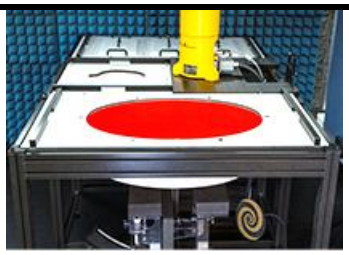
Construction	The ELI phantom is used for compliance testing of handheld and body-mounted wireless devices. ELI is fully compatible with the IEC 62209-2 standard and all known tissue simulating liquids. ELI has been optimized regarding its performance and can be integrated into our standard phantom tables. A cover prevents evaporation of the liquid. Reference markings on the phantom allow installation of the complete setup, including all predefined phantom positions and measurement grids, by teaching three points. The phantom is compatible with all SPEAG dosimetric probes and dipoles.	
Material	Vinylester, fiberglass reinforced (VE-GF)	
Shell Thickness	2.0 ± 0.2 mm (bottom plate)	
Dimensions	Major axis: 600 mm Minor axis: 400 mm	
Filling Volume	approx. 30 liters	

4.2.5 Device Holder

Model	MD4HHTV5 - Mounting Device for Hand-Held Transmitters	
Construction	In combination with the Twin SAM or ELI phantoms, the Mounting Device for Hand-Held Transmitters enables rotation of the mounted transmitter device to specified spherical coordinates. At the heads, the rotation axis is at the ear opening. Transmitter devices can be easily and accurately positioned according to IEC 62209-1, IEEE 1528, FCC, or other specifications. The device holder can be locked for positioning at different phantom sections (left head, right head, flat).	
Material	Polyoxymethylene (POM)	

Model	MDA4WTV5 - Mounting Device Adaptor for Ultra Wide Transmitters	
Construction	An upgrade kit to Mounting Device to enable easy mounting of wider devices like big smart-phones, e-books, small tablets, etc. It holds devices with width up to 140 mm.	
Material	Polyoxymethylene (POM)	

Model	MDA4SPV6 - Mounting Device Adaptor for Smart Phones	
Construction	The solid low-density MDA4SPV6 adaptor assuring no impact on the DUT radiation performance and is conform with any DUT design and shape.	
Material	ROHACELL	

Model	MD4LAPV5 - Mounting Device for Laptops and other Body-Worn Transmitters	
Construction	In combination with the Twin SAM or ELI phantoms, the Mounting Device (Body-Worn) enables testing of transmitter devices according to IEC 62209-2 specifications. The device holder can be locked for positioning at a flat phantom section.	
Material	Polyoxymethylene (POM), PET-G, Foam	

4.2.6 System Validation Dipoles

Model	D-Serial	
Construction	Symmetrical dipole with l/4 balun. Enables measurement of feed point impedance with NWA. Matched for use near flat phantoms filled with tissue simulating solutions.	
Frequency	750 MHz to 5800 MHz	
Return Loss	> 20 dB	
Power Capability	> 100 W (f < 1GHz), > 40 W (f > 1GHz)	

4.2.7 Power Source

Model	Powersource1	
Signal Type	Continuous Wave	
Operating Frequencies	600 MHz to 5850 MHz	
Output Power	-5.0 dBm to +17.0 dBm	
Power Supply	5V DC, via USB jack	
Power Consumption	<3 W	
Applications	System performance check and validation with a CW signal.	

4.2.8 Tissue Simulating Liquids

For SAR measurement of the field distribution inside the phantom, the phantom must be filled with homogeneous tissue simulating liquid to a depth of at least 15 cm. For head SAR testing, the liquid height from the ear reference point (ERP) of the phantom to the liquid top surface is larger than 15 cm. For body SAR testing, the liquid height from the center of the flat phantom to the liquid top surface is larger than 15 cm. The nominal dielectric values of the tissue simulating liquids in the phantom and the tolerance of 10 % are listed in Table-4.1.

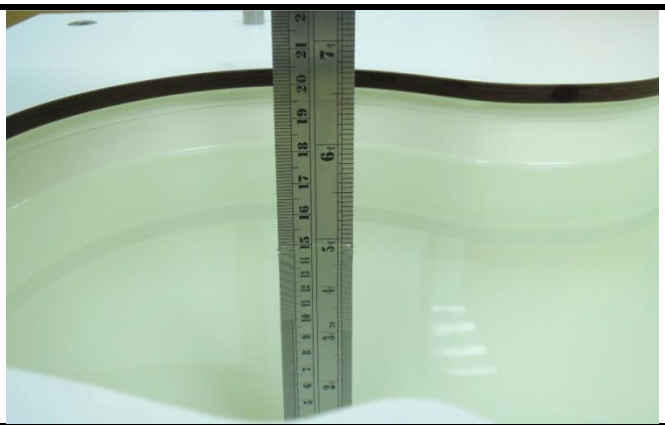

Photo of Liquid Height for Head Position

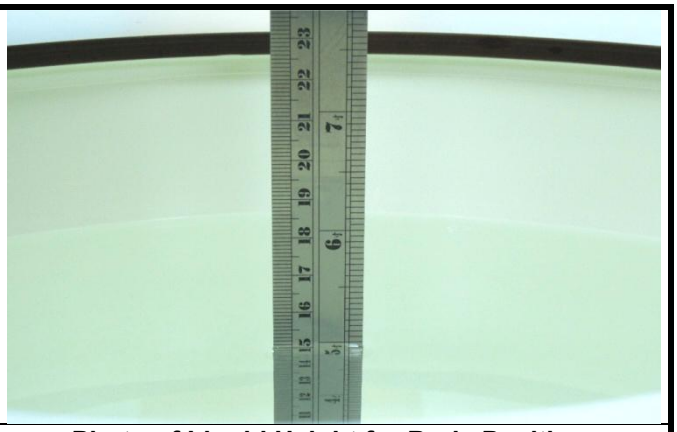

Photo of Liquid Height for Body Position

Table-4.1 Targets of Tissue Simulating Liquid

Frequency (MHz)	Target Permittivity	Range of ±10 %	Target Conductivity	Range of ±10 %
4	55.0	49.5 ~ 60.5	0.75	0.68 ~ 0.83
13	55.0	49.5 ~ 60.5	0.75	0.68 ~ 0.83
30	55.0	49.5 ~ 60.5	0.75	0.68 ~ 0.83
450	43.5	39.2 ~ 47.9	0.87	0.78 ~ 0.96
750	41.9	37.7 ~ 46.1	0.89	0.80 ~ 0.98
835	41.5	37.4 ~ 45.7	0.90	0.81 ~ 0.99
900	41.5	37.4 ~ 45.7	0.97	0.87 ~ 1.07
1450	40.5	36.5 ~ 44.6	1.20	1.08 ~ 1.32
1500	40.4	36.4 ~ 44.4	1.23	1.11 ~ 1.35
1640	40.2	36.2 ~ 44.2	1.31	1.18 ~ 1.44
1750	40.1	36.1 ~ 44.1	1.37	1.23 ~ 1.51
1800	40.0	36.0 ~ 44.0	1.40	1.26 ~ 1.54
1900	40.0	36.0 ~ 44.0	1.40	1.26 ~ 1.54
2000	40.0	36.0 ~ 44.0	1.40	1.26 ~ 1.54
2100	39.8	35.8 ~ 43.8	1.49	1.34 ~ 1.64
2300	39.5	35.6 ~ 43.5	1.67	1.50 ~ 1.84
2450	39.2	35.3 ~ 43.1	1.80	1.62 ~ 1.98
2600	39.0	35.1 ~ 42.9	1.96	1.76 ~ 2.16
3000	38.5	34.7 ~ 42.4	2.40	2.16 ~ 2.64
3500	37.9	34.1 ~ 41.7	2.91	2.62 ~ 3.20
4000	37.4	33.7 ~ 41.1	3.43	3.09 ~ 3.77
4500	36.8	33.1 ~ 40.5	3.94	3.55 ~ 4.33
5000	36.2	32.6 ~ 39.8	4.45	4.01 ~ 4.90
5200	36.0	32.4 ~ 39.6	4.66	4.19 ~ 5.13
5400	35.8	32.2 ~ 39.4	4.86	4.37 ~ 5.35
5600	35.5	32.0 ~ 39.1	5.07	4.56 ~ 5.58
5800	35.3	31.8 ~ 38.8	5.27	4.74 ~ 5.80
6000	35.1	31.6 ~ 38.6	5.48	4.93 ~ 6.03
6500	34.5	31.1 ~ 38.0	6.07	5.46 ~ 6.68

The dielectric properties of the tissue simulating liquids are defined in IEC 62209-1 and IEC 62209-2. The dielectric properties of the tissue simulating liquids were verified prior to the SAR evaluation using a dielectric assessment kit and a network analyzer.

Since the range of ±10 % of the required target values is used to measure relative permittivity and conductivity, the SAR correction procedure is applied to correct measured SAR for the deviations in permittivity and conductivity. Only positive correction has been used to scale up the measured SAR, and SAR result would not be corrected if the correction △SAR has a negative sign.

The following table gives the recipes for tissue simulating liquids.

Table-4.2 Recipes of Tissue Simulating Liquid

Tissue Type	Bactericide	DGBE	HEC	NaCl	Sucrose	Triton X-100	Water	Diethylene Glycol Mono-hexylether	Tween 20	Oxidized Mineral Oil
H50	-	-	-	1.77	-	-	53.53	-	44.7	-
H750	0.2	-	0.2	1.5	56.0	-	42.1	-	-	-
H835	0.2	-	0.2	1.5	57.0	-	41.1	-	-	-
H900	0.2	-	0.2	1.4	58.0	-	40.2	-	-	-
H1450	-	43.3	-	0.6	-	-	56.1	-	-	-
H1640	-	45.8	-	0.5	-	-	53.7	-	-	-
H1750	-	47.0	-	0.4	-	-	52.6	-	-	-
H1800	-	44.5	-	0.3	-	-	55.2	-	-	-
H1900	-	44.5	-	0.2	-	-	55.3	-	-	-
H2000	-	44.5	-	0.1	-	-	55.4	-	-	-
H2300	-	44.9	-	0.1	-	-	55.0	-	-	-
H2450	-	45.0	-	0.1	-	-	54.9	-	-	-
H2600	-	45.1	-	0.1	-	-	54.8	-	-	-
H3500	-	8.0	-	0.2	-	20.0	71.8	-	-	-
H5G	-	-	-	-	-	17.2	65.5	17.3	-	-
H6G	-	-	-	-	-	-	56.0	-	-	44.0

4.3 SAR System Verification

The system check verifies that the system operates within its specifications. It is performed daily or before every SAR measurement. The system check uses normal SAR measurements in the flat section of the phantom with a matched dipole at a specified distance. The system verification setup is shown as below.

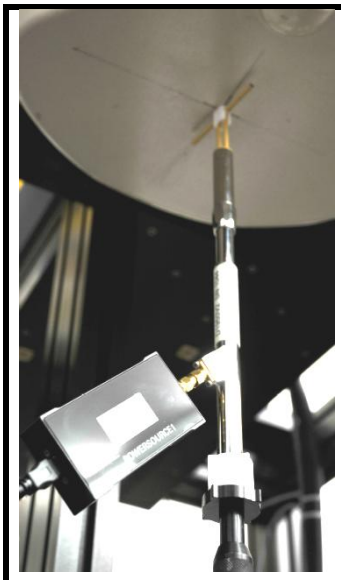

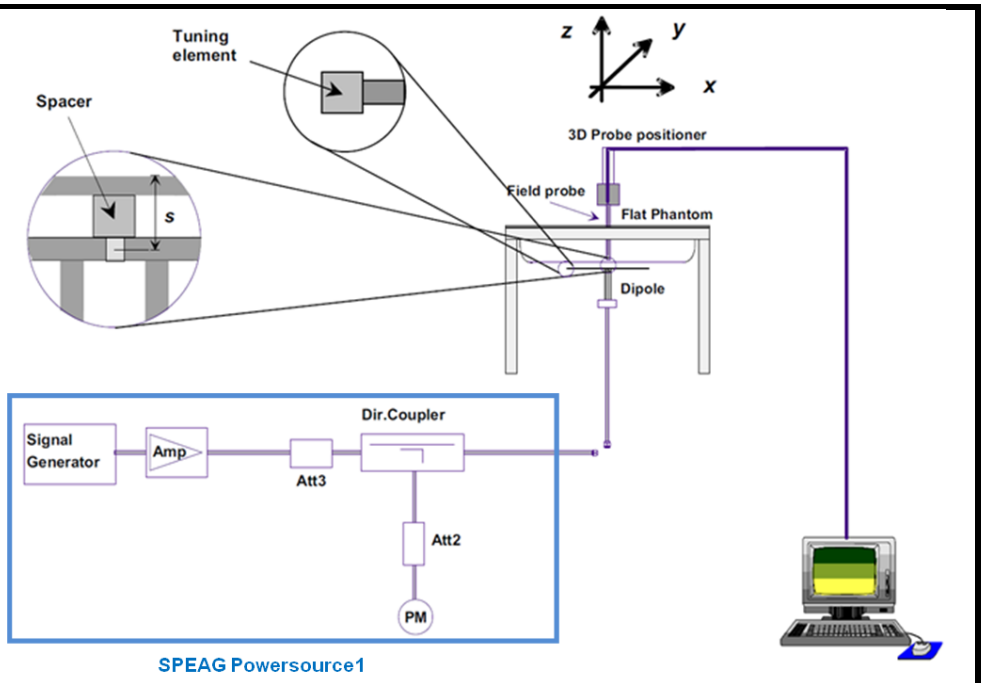

Fig-4.3a System Verification Setup for Frequency <= 6 GHz

For RFID 13.56MHz：Instead of a regular dipole antenna the loop antenna CLA 13 is used (Picture below)

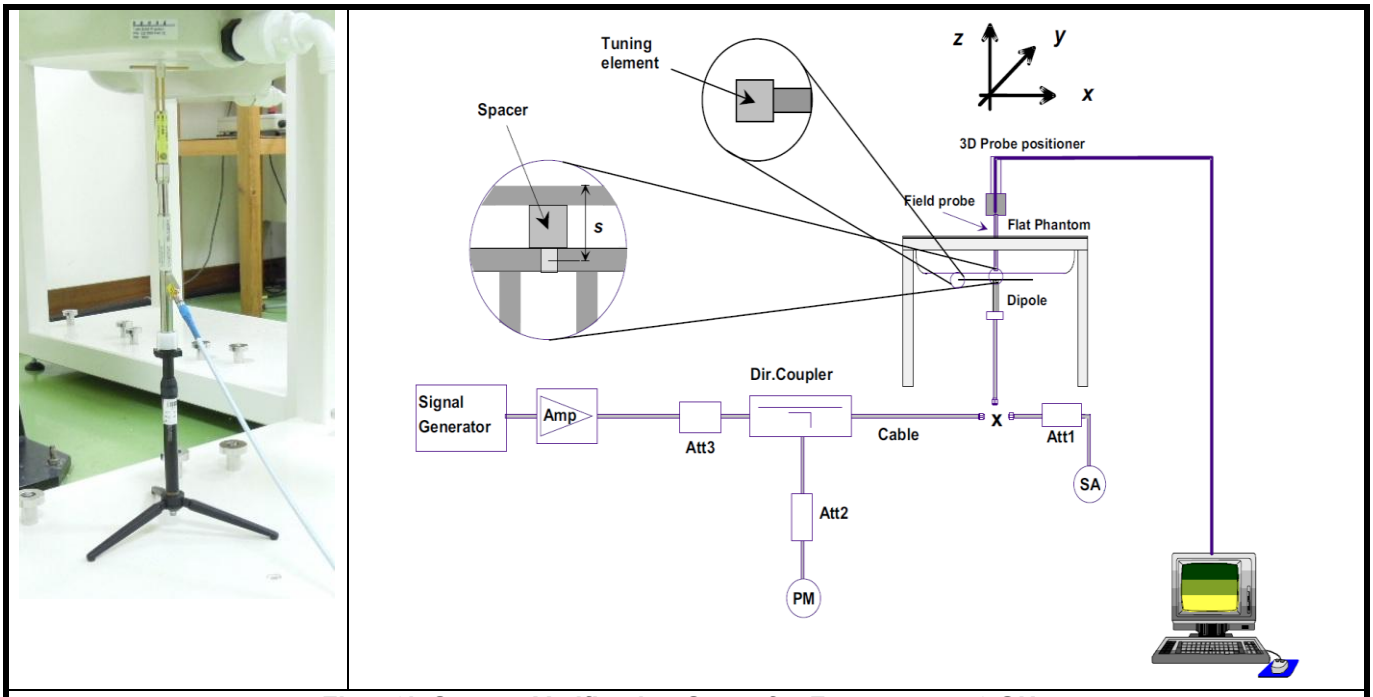

Fig-4.3b System Verification Setup for Frequency > 6 GHz

For frequency <= 6 GHz, the SPEAG Powersource1 is a portable and very stable RF source providing a continuous wave (CW) signal. It is designed for conducting SAR system checks and SAR system validation of DASY and is compatible with IEC/IEEE 62209-1528 and IEEE Std 1528 standards. The Powersource1 has been calibrated by SPEAG's ISO/IEC 17025-accredited calibration center. When using Powersource1, the setup can be simplified, as shown in Fig-4.3a. The signal purity is warranted by design. Since the Powersource1 is calibrated, no additional equipment is needed and the Powersource1 can directly be connected to the SMA connector of the dipole without a cable as all separate components (signal generator, amplifier, coupler and power meter) are built into the unit.

For frequency > 6 GHz, the setup is shown in Fig-4.3b. The validation dipole is placed beneath the flat phantom with the specific spacer in place. The distance spacer is touch the phantom surface with a light pressure at the reference marking and be oriented parallel to the long side of the phantom. The spectrum analyzer measures the forward power at the location of the system check dipole connector. The signal generator is adjusted for the desired forward power as 100 mW at the dipole connector and the power meter is read at that level. After connecting the cable to the dipole, the signal generator is readjusted for the same reading at power meter.

The validation dipole is placed beneath the flat phantom with the specific spacer in place. The distance spacer is touch the phantom surface with a light pressure at the reference marking and be oriented parallel to the long side of the phantom. The Powersource1 is adjusted for the desired forward power of 17 dBm or 20 dBm will be set for > 6 GHz at the dipole connector and the RF output power would be turned on. After system check testing, the SAR result will be normalized to 1W forward input power and compared with the reference SAR value derived from validation dipole certificate report. The deviation of system check should be within 10 %.

4.4 SAR Measurement Procedure

According to the SAR test standard, the recommended procedure for assessing the peak spatial-average SAR value consists of the following steps:

(a) Power reference measurement
(b) Area scan
(c) Zoom scan
(d) Power drift measurement

The SAR measurement procedures for each of test conditions are as follows:

(a) Make EUT to transmit maximum output power
(b) Measure conducted output power through RF cable
(c) Place the EUT in the specific position of phantom
(d) Perform SAR testing steps on the DASY system
(e) Record the SAR value

4.4.1 Area Scan and Zoom Scan Procedure

First area scan is used to locate the approximate location(s) of the local peak SAR value(s). The measurement grid within an area scan is defined by the grid extent, grid step size and grid offset. Next, in order to determine the EM field distribution in a three-dimensional spatial extension, zoom scan is required. The zoom scan is performed around the highest E-field value to determine the averaged SAR-distribution.

Measure the local SAR at a test point at 1.4 mm of the inner surface of the phantom recommended by SEPAG. The area scan (two-dimensional SAR distribution) is performed cover at least an area larger than the projection of the EUT or antenna. The measurement resolution and spatial resolution for interpolation shall be chosen to allow identification of the local peak locations to within one-half of the linear dimension of the corresponding side of the zoom scan volume. Following table provides the measurement parameters required for the area scan.

Parameter	$f \leqq$ 3 GHz	3 GHz < $f \leqq$ 10 GHz
Maximum distance from closest measurement point to phantom surface	5 ± 1	$\delta \ln(2)/2$ ±0.5
Maximum probe angle from probe axis to phantom surface normal at the measurement location	5° for flat phantom 30° for other phantom	5° for flat phantom 20° for other phantom
Maximum area scan spatial resolution: Δx_{Area}, Δy_{Area}	≦2 GHz: ≦15 mm 2 – 3 GHz: ≦12 mm	3 – 4 GHz: ≦12 mm 4 – 6 GHz: ≦10 mm 6 – 7 GHz: ≦7.5 mm

From the scanned SAR distribution, identify the position of the maximum SAR value, in addition identify the positions of any local maxima with SAR values within 2 dB of the maximum value that will not be within the zoom scan of other peaks. Additional peaks shall be measured only when the primary peak is within 2 dB of the SAR compliance limit (e.g. 1 W/kg for 1.6 W/kg, 1 g limit; or 1.26 W/kg for 2 W/kg, 10 g limit).

The zoom scan (three-dimensional SAR distribution) is performed at the local maxima locations identified in previous area scan procedure. The zoom scan volume must be larger than the required minimum dimensions. When graded grids are used, which only applies in the direction normal to the phantom surface, the initial grid separation closest to the phantom surface and subsequent graded grid increment ratios must satisfy the required protocols. The 1-g SAR averaging volume must be fully contained within the zoom scan measurement volume boundaries; otherwise, the measurement must be repeated by shifting or expanding the zoom scan volume. The similar requirements also apply to 10-g SAR measurements. Following table provides the measurement parameters required for the zoom scan.

Parameter		$f \leqq$ 3 GHz	3 GHz < $f \leqq$ 10 GHz
Maximum zoom scan spatial resolution: Δx_{Zoom}, Δy_{Zoom}		≦2 GHz: ≦8 mm 2 – 3 GHz: ≦5 mm	3 – 4 GHz: ≦5 mm 4 – 6 GHz: ≦4 mm 6 – 7 GHz: ≦3.4 mm
Maximum zoom scan spatial resolution, normal to phantom surface	*uniform grid:* $\Delta z_{Zoom}(n)$	≦5 mm	3 – 4 GHz: ≦4 mm 4 – 5 GHz: ≦3 mm 5 – 6 GHz: ≦2 mm 6 – 7 GHz: ≦2 mm
	graded grids: $\Delta z_{Zoom}(1)$	≦4 mm	3 – 4 GHz: ≦3.0 mm 4 – 5 GHz: ≦2.5 mm 5 – 6 GHz: ≦2.0 mm 6 – 7 GHz: ≦1.7 mm
	$\Delta z_{Zoom}(n>1)$	≦1.5·$\Delta z_{Zoom}(n-1)$ mm	
Minimum zoom scan volume (x, y, z)		≥30 mm	3 – 4 GHz: ≥28 mm 4 – 5 GHz: ≥25 mm 5 – 6 GHz: ≥22 mm 6 – 7 GHz: ≥22 mm

Per IEC 62209-2 AMD1, the successively higher resolution zoom scan is required if the zoom scan measured as defined above complies with both of the following criteria, or if the peak spatial-average SAR is below 0.1 W/kg, no additional measurements are needed:

(1) The smallest horizontal distance from the local SAR peaks to all points 3 dB below the SAR peak shall be larger than the horizontal grid steps in both x and y directions (Δx, Δy). This shall be checked for the measured zoom scan plane conformal to the phantom at the distance zM1.

(2) The ratio of the SAR at the second measured point (M2) to the SAR at the closest measured point (M1) at the x-y location of the measured maximum SAR value shall be at least 30 %.

If one or both of the above criteria are not met, the zoom scan measurement shall be repeated using a finer resolution. New horizontal and vertical grid steps shall be determined from the measured SAR distribution so that the above criteria are met. Compliance with the above two criteria shall be demonstrated for the new measured zoom scan.

4.4.2 Volume Scan Procedure

The volume scan is used for assess overlapping SAR distributions for antennas transmitting in different frequency bands. It is equivalent to an oversized zoom scan used in standalone measurements. The measurement volume will be used to enclose all the simultaneous transmitting antennas. For antennas transmitting simultaneously in different frequency bands, the volume scan is measured separately in each frequency band. In order to sum correctly to compute the 1g aggregate SAR, the EUT remain in the same test position for all measurements and all volume scan use the same spatial resolution and grid spacing. When all volume scan were completed, the software, SEMCAD postprocessor can combine and subsequently superpose these measurement data to calculating the multiband SAR.

4.4.3 Power Drift Monitoring

All SAR testing is under the EUT install full charged battery and transmit maximum output power. In DASY measurement software, the power reference measurement and power drift measurement procedures are used for monitoring the power drift of EUT during SAR test. Both these procedures measure the field at a specified reference position before and after the SAR testing. The software will calculate the field difference in dB. If the power drift more than 5%, the SAR will be retested.

4.4.4 Spatial Peak SAR Evaluation

The procedure for spatial peak SAR evaluation has been implemented according to the test standard. It can be conducted for 1g and 10g, as well as for user-specific masses. The DASY software includes all numerical procedures necessary to evaluate the spatial peak SAR value.

The base for the evaluation is a "cube" measurement. The measured volume must include the 1g and 10g cubes with the highest averaged SAR values. For that purpose, the center of the measured volume is aligned to the interpolated peak SAR value of a previously performed area scan.

The entire evaluation of the spatial peak values is performed within the post-processing engine (SEMCAD). The system always gives the maximum values for the 1g and 10g cubes. The algorithm to find the cube with highest averaged SAR is divided into the following stages:

(a) Extraction of the measured data (grid and values) from the Zoom Scan
(b) Calculation of the SAR value at every measurement point based on all stored data (A/D values and measurement parameters)
(c) Generation of a high-resolution mesh within the measured volume
(d) Interpolation of all measured values form the measurement grid to the high-resolution grid
(e) Extrapolation of the entire 3-D field distribution to the phantom surface over the distance from sensor to surface
(f) Calculation of the averaged SAR within masses of 1g and 10g

4.4.5 SAR Averaged Methods

In DASY, the interpolation and extrapolation are both based on the modified Quadratic Shepard’s method. The interpolation scheme combines a least-square fitted function method and a weighted average method which are the two basic types of computational interpolation and approximation.

Extrapolation routines are used to obtain SAR values between the lowest measurement points and the inner phantom surface. The extrapolation distance is determined by the surface detection distance and the probe sensor offset. The uncertainty increases with the extrapolation distance. To keep the uncertainty within 1% for the 1 g and 10 g cubes, the extrapolation distance should not be larger than 5 mm.

5. SAR Measurement Evaluation

5.1 EUT Configuration and Setting

<Considerations Related to NFC(RFID) for Setup and Testing>

Generally, various vendor-specific external test software and chipset-based internal test modes are commonly used for SAR measurements. These chipset-based test mode utilities are often hardware and manufacturer dependent and often include significant flexibility to reconfigure or reprogram the device. NFC (RFID) devices must be configured for the highest duty cycle. Additionally, current generation SAR systems require periodic transmission of duty cycle to correctly measure SAR. The reported SAR must be scaled to 100% transmission duty cycle to determine compliance with the maximum trim tolerance limit.

5.2 EUT Testing Position

5.2.1 Body Exposure Conditions

For laptop PC, according to KDB 616217 D04, SAR evaluation is required for the bottom surface of the keyboard. This EUT was tested in the base of EUT directly against the flat phantom. The required minimum test separation distance for incorporating transmitters and antennas into laptop computer display is determined with the display screen opened at an angle of 90° to the keyboard compartment.

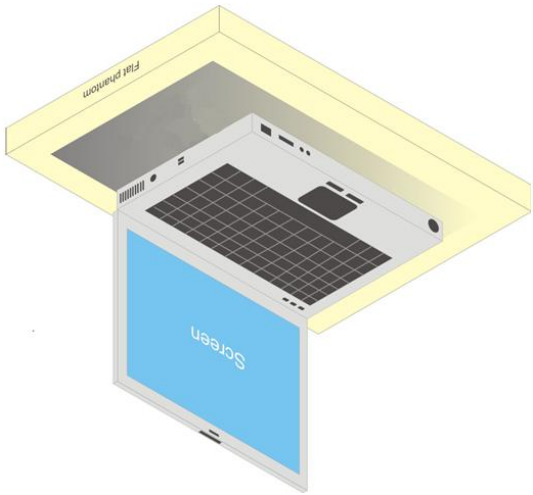

Fig-5.1 Illustration for Laptop Setup

Due to the NFC(RFID) antenna being located on the back of the Notebook Computer, the SAR evaluation test positions have been increased as follows: SAR evaluation was tested on Bottom positions for NFC(RFID) antenna in this report. In these positions, the separation distance between EUT and phantom is 0 mm.

5.3 Tissue Verification

Refer to Appendix C.

5.4 System Validation

Refer to Appendix C.

5.5 System Verification

Refer to Appendix C.

5.6 Maximum Output Power

5.6.1 Maximum Target Conducted Power

Refer to Appendix D.

5.6.2 Measured Conducted Power Result

Refer to Appendix E.

5.7 SAR Testing Results

5.7.1 SAR Test Reduction Considerations

<KDB 447498 D01, General RF Exposure Guidance>

Testing of other required channels within the operating mode of a frequency band is not required when the reported SAR for the mid-band or highest output power channel is:

(1) ≤ 0.8 W/kg or 2.0 W/kg, for 1-g or 10-g respectively, when the transmission band is ≤ 100 MHz

(2) ≤ 0.6 W/kg or 1.5 W/kg, for 1-g or 10-g respectively, when the transmission band is between 100 MHz and 200 MHz

(3) ≤ 0.4 W/kg or 1.0 W/kg, for 1-g or 10-g respectively, when the transmission band is ≥ 200 MHz

5.7.2 SAR Results for Body Exposure Condition (Test Separation Distance is 0 mm)

Refer to Appendix F.

5.7.3 SAR Measurement Variability

According to KDB 865664 D01, SAR measurement variability was assessed for each frequency band, which is determined by the SAR probe calibration point and tissue-equivalent medium used for the device measurements. When both head and body tissue-equivalent media are required for SAR measurements in a frequency band, the variability measurement procedures should be applied to the tissue medium with the highest measured SAR, using the highest measured SAR configuration for that tissue-equivalent medium. Alternatively, if the highest measured SAR for both head and body tissue-equivalent media are ≤ 1.45 W/kg and the ratio of these highest SAR values, i.e., largest divided by smallest value, is ≤ 1.10, the highest SAR configuration for either head or body tissue-equivalent medium maybe used to perform the repeated measurement. These additional measurements are repeated after the completion of all measurements requiring the same head or body tissue-equivalent medium in a frequency band. The test device should be returned to ambient conditions (normal room temperature) with the battery fully charged before it is re-mounted on the device holder for the repeated measurement(s) to minimize any unexpected variations in the repeated results.

Since all the measured SAR are less than 0.8 W/kg, the repeated measurement is not required.

5.7.4 Simultaneous Multi-band Transmission Evaluation

There is no simultaneous transmission configuration in this device.

Test Engineer：Christin Lee

6. Calibration of Test Equipment

Refer to Appendix J.

7. Measurement Uncertainty

According to KDB 865664 D01, SAR measurement uncertainty analysis is required in SAR reports only when the highest measured SAR in a frequency band is ≥ 1.5 W/kg for 1-g SAR, and ≥ 3.75 W/kg for 10-g SAR. The procedures described in IEEE Std 1528-2013should be applied. The expanded SAR measurement uncertainty must be ≤ 30%,for a confidence interval of k = 2. When the highest measured SAR within a frequency band is < 1.5 W/kg for 1-g and < 3.75 W/kg for 10-g, the extensive SAR measurement uncertainty analysis described in IEEE Std 1528-2013 is not required in SAR reports submitted for equipment approval. Hence, the measurement uncertainty analysis is not required in this SAR report because the test result met the condition.

8. Information of the Testing Laboratories

We, Bureau Veritas Consumer Products Services (H.K.) Ltd., Taoyuan Branch, were founded in 1988 to provide our best service in EMC, Radio, Telecom and Safety consultation. Our laboratories are FCC recognized accredited test firms and accredited according to ISO/IEC 17025.

If you have any comments, please feel free to contact us at the following:

Lin Kou EMC/RF Lab
Tel: 886-2-26052180
Fax: 886-2-26051924

Hsin Chu EMC/RF/Telecom Lab
Tel: 886-3-6668565
Fax: 886-3-6668323

Hwa Ya EMC/RF/Safety/SAR Lab
Tel: 886-3-3183232
Fax: 886-3-3270892

Email: service.adt@bureauveritas.com
Web Site: http://ee.bureauveritas.com.tw

The address and road map of all our labs can be found in our web site also.

--- END ---