Applicant Name: Intel Corporation

Applicant Address: Intel Corporation
Evening Creek Drive,
San Diego CA, 92128

FCC ID: E2K24BNHM

Test/Analysis Date: 19th & 20th April 2005

Project Number: Intel-Dell-Tahiti-HITACHI-BG-5144

DUT Type	Laptop computer with 802.11b/g WLAN
Antenna Type	Internal HITACHI
Agency Series Number	PP17L
Project Name	Tahiti
Received Status	Proto-type
DUT Serial Number	N/A
Experimental/Compliance	Compliance-FCC
Tx Frequency	2412MHz to 2462MHz
Max Tx Power	802.11b 18.2db Peak 802.11g 16.5dB Peak
Conservative Averaged SAR (RF Exposure)	802.11b 0.458 W/kg 802.11g 0.185 W/kg

We the undersigned of APREL Laboratories, located at 51 Spectrum Way, Ottawa, Ontario, Canada, K2R-1E6, on the date indicated attest that the Device Under Test as detailed within this test report has been tested and found to be compliant with the Uncontrolled Environment RF exposure rules and regulations as defined by the methodologies, procedures, and standards as described in this document.

APREL Laboratories are an ISO 17025 accredited facility.

27-APRIL-2005.

Stuart Nicol, Date
Director Product Development

April 27, 2005

Jay Sarkar, Date
Director Standards & Certification

April 27/05

Dr Jacek J. Wojcik, Date
P. Engineer

Telecommunications Approval Board - Spectrum Sciences Institute
SAR Certified
APREL Laboratories
PP17L

© 2005 APREL Laboratories
E.& O.E.

This report shall not be reproduced, except in full, without written approval of APREL Laboratories

Table of Contents

1.0 Introduction 3
2.0 Applicable Documents 3
3.0 ALSAS-10U System Description 4
3.1 Applications 5
3.2 Visualisation and reporting 5
3.3 Field scans 5
3.3.1 Area Scans 5
3.3.2 Zoom Scan (Cube Scan Averaging) 6
3.4 Operator settings 6
3.5 ALSAS-10U Interpolation and Extrapolation Uncertainty 6
4.0 ALSAS-10U Hardware 7
4.1 Isotropic E-Field Probe 7
4.2 Isotropic E-Field Probe Specification 8
4.3 Boundary Detection Unit and Probe Mounting Device 8
4.4 Daq-Paq (Analog to Digital Electronics) 9
4.5 Axis Articulated Robot 10
4.6 ALSAS Universal Workstation 10
4.7 Universal Device Positioner 11
4.8 Phantom Types 12
4.8.1 APREL SAM Phantoms 12
4.8.2 APREL Laboratories Universal Phantom 13
4.9 Validation Dipoles 14
5.0 Tissue Simulation Fluid 15
5.1 Tissue Calibration Procedure Using a Coaxial Probe 16
5.2 Tissue Calibration Results 16
6.0 System Validation 17
6.1 Experimental Results Summary 18
6.2 SAR Measurement Procedure 18
6.3 SAR Exposure Limits 18
6.4 Equipment List 19
6.5 SAR Measurement Results 20
6.6 Additional Information 24
Appendix A SAR Plots 30
Appendix B Probe Calibration Certificate ..... Error! Bookmark not defined.
Appendix C Dipole Calibration Certificate .....

© 2005 APREL Laboratories
E.& O.E.
This report shall not be reproduced, except in full, without written approval of APREL Laboratories

1.0 Introduction

Tests were conducted at APREL Laboratories within the ISO 17025 accredited SAR facility to establish the conservative exposure value associated with the Device Under Test as detailed within this test report. Assessments were made in line with the guidelines contained in the reference documents. The method used for assessment was the ALSAS-10U (APREL Laboratories SAR Assessment System-10 Universal). All practices along with standards and scientific methodologies which have been utilized during the assessment of the Device Under Test (DUT) are detailed within this test report.

APREL Laboratories employees currently hold senior and executive positions in multiple international standards organizations, including IEC, IEEE, among others, and work closely with several national regulators, including the FCC. Through the IEC, we have a liaison with CENELEC, and informal links to other national and international standards organizations.

2.0 Applicable Documents

ANSI/IEEE C95.1-1999, IEEE Standard for Safety Levels with Respect to Human Exposure to Radio Frequency Electromagnetic Fields, 3 kHz to 300 GHz.

FCC 96-326, Guidelines for Evaluating the Environmental Effects of Radio-Frequency Radiation.

ANSI/IEEE C95.3-1992, IEEE Recommended Practice for the Measurement of Potentially Hazardous Electromagnetic Fields – RF and Microwave.

OET Bulletin 65 (Edition 97-01) Supplement C (Edition 01-01), “Evaluating Compliance with FCC Guidelines for Human Exposure to Radio Frequency Electromagnetic Fields”.

IEEE 1528 “Recommended Practice for Determining the Peak Spatial Average Specific Absorption Rate (SAR) in the Human Body Due to Wireless Communication Devices: Experimental Techniques.”

© 2005 APREL Laboratories
E.& O.E.
This report shall not be reproduced, except in full, without written approval of APREL Laboratories

3.0 ALSAS-10U System Description

APREL Laboratories ALSAS-10-U (APREL Laboratories SAR Assessment System) is fully optimized for the dosimetric evaluation of a broad range of wireless transceivers and antennas. It is an easy-to-use development and compliance tool, which provides excellent application flexibility. Developed in line with the latest methodologies it is fully compliant with the technical and scientific requirements of IEEE 1528, IEC 62209, CENELEC, ARIB, ACA, and the Federal Communications Commission. The system comprises of a six axes articulated robot which utilizes a dedicated controller.

ALSAS-10U has been developed with a strong engineering focus, and with custom modular software/hardware for the broadest range of applications, including dosimetry research and measurements in various Phantoms – SAM Phantom, UniPhantom™ Universal Phantom, Universal Flat Phantom and others.

Free space E-Field measurements of mobile devices and base station antennas can also be executed using ALSAS. With the current ALSAS configuration, several phantoms and setups can be arranged around the system – and since the phantoms are designed to be light and easy to move for interchanging between test frequencies.

ALSAS-10U has been developed using the latest methodologies and FDTD modeling to provide a platform which is repeatable with minimum uncertainty.

The ongoing commitment from APREL Laboratories to the field of Dosimetric research and development will ensure that the ALSAS-10-U measurement system can easily be upgraded to accommodate changes to wireless technologies, and scientific methodologies.

© 2005 APREL Laboratories
E.& O.E.

This report shall not be reproduced, except in full, without written approval of APREL Laboratories

3.1 Applications

Predefined measurement procedures compliant with the guidelines of CENELEC, IEEE, IEC, FCC, etc are utilized during the assessment for the device. Automatic detection for all SAR maxima are embedded within the core architecture for the system, ensuring that peak locations used for centering the zoom scan are within a 1mm resolution and a 0.05mm repeatable position. A little less than 10 min per device position measurement completion time, (depending of DUT size) ensures minimum power drift during the assessment. No user interaction is required during the measurement processes: area scan, evaluation of cube maximal search, fine cube measurements and device power drift measurement. System operation range currently available up-to 6 GHz in simulated tissue.

ALSAS-10U can be used for all analog and digital devices, including wideband, spread spectrum and pulsed systems, etc.: handsets, handhelds, wireless data, electronic article surveillance, accessories, wireless access points, WLAN, cordless, radio, etc.

3.2 Visualisation and reporting

2/3D isoline distribution, scatter graphics, polar graphics, and vector reproduction. Device representation and phantom visualization in 2/3D graphics with measurement data overlaid (in color plot format). Freely configurable output graphic formats with automatic title, data and legend generation which includes all relevant information relating to the measurement process. Uncertainty analysis and budget calculated and reported drawing on active device drift assessment, and tissue simulation values.

3.3 Field scans

ALSAS-10U can provide multiple scan types including Measurements along lines (X, Y, Z), multiple planes, curved surfaces (normalize probe to surface), volumes in free space or restricted volumes (phantoms). Cube measurements with surface extrapolation and spatial SAR evaluation for 1g and/or 10g. Time measurements (source power drift). Probe rotation measurements (isotropy) and many others in line with the requirements of any given standard or procedure.

3.3.1 Area Scans

Area scans are defined prior to the measurement process being executed with a user defined variable spacing between each measurement point (integral) allowing low uncertainty measurements to be conducted. Scans defined for FCC applications utilize a $10mm^2$ step integral, with 1mm interpolation used to locate the peak SAR area used for zoom scan assessments.

A maximum area scan size is set at 280mm x 200mm which can be changed to a smaller size dependent on the filed distribution of the device under test. The area scan size is documented within the SAR report which is delivered by the SAR system software.

51 Spectrum Way
Ottawa ON Canada K2R 1E6
www.aprel.com
info@aprel.com
Phone (613) 820-2730
Fax (613) 820-4161
© 2005 APREL Laboratories
E.& O.E.
This report shall not be reproduced, except in full, without written approval of APREL Laboratories

Where the system identifies multiple SAR peaks (which are within 25% of peak value) the system will provide the user with the option of assessing each peak location individually for zoom scan averaging.

3.3.2 Zoom Scan (Cube Scan Averaging)

The averaging zoom scan volume utilized in the ALSAS-10U software is in the shape of a cube and the side dimension of a 1 g or 10 g mass is dependent on the density of the liquid representing the simulated tissue. A density of 1 000 kg/m^3 is used to represent the head and body tissue density and not the phantom liquid density, in order to be consistent with the definition of the liquid dielectric properties, i.e. the side length of the 1 g cube is 10mm, with the side length of the 10 g cube 21,5mm.

When the cube intersects with the surface of the phantom, it is oriented so that 3 vertices touch the surface of the shell or the centre of a face is tangent to the surface. The face of the cube closest to the surface is modified in order to conform to the tangent surface.

The zoom scan integer steps can be user defined so as to reduce uncertainty, but normal practice for typical test applications (including FCC) utilize a physical step of 5x5x9 (8mmx8mmx4mm) providing a volume of 32mm in the X & Y axis, and 36mm in the Z axis. All points remain tangential to the surface by utilizing the normalize (probe tilt) feature so as to reduce measurement uncertainty.

3.4 Operator settings

Multiple access levels (password protected) for parametric modifications/test scenarios in line with selected standards, including the FCC. Any number of predefined settings (probes, phantoms, liquids, devices, measurement procedures, etc.) can be stored for future use and repeatable assessments.

3.5 ALSAS-10U Interpolation and Extrapolation Uncertainty

The overall uncertainty for the methodology and algorithms the used during the SAR calculation was evaluated using the data from IEEE 1528 based on the example f3 algorithm:

$$f_3(x,y,z) = A\,\frac{a^2}{\frac{a^2}{4} + x'^2 + y'^2}\cdot\left(e^{-\frac{2z}{a}} + \frac{a^2}{2(a+2z)^2}\right)$$

© 2005 APREL Laboratories
E.& O.E.
This report shall not be reproduced, except in full, without written approval of APREL Laboratories

4.0 ALSAS-10U Hardware

The ALSAS-10U comprises of hardware designed exclusively by APREL Laboratories based on methodologies presented in IEEE 1528, IEC 62209, CENELEC and FCC supplement C OET bulletin 65.

4.1 Isotropic E-Field Probe

The isotropic E-Field probe used by APREL Laboratories, has been fully calibrated and assessed for isotropicity, and boundary effect within a controlled environment. Depending on the frequency for which the probe is calibrated the method utilized for calibration will change. APREL Laboratories utilize a number of methods for calibrating probes, and these are outlined in the table below.

Calibration Frequency (MHz)	Air Calibration	Tissue Calibration
300	TEM Cell	Temperature
450	TEM Cell	Temperature
835	TEM Cell	Temperature
900	TEM Cell	Temperature
1800	TEM Cell	Temperature
1900	TEM Cell	Temperature
2450	Waveguide	Temperature
5200	Waveguide	Waveguide
5800	Waveguide	Waveguide

The APREL Laboratories E-Field probe utilizes a triangular sensor arrangement as detailed in the diagram below.

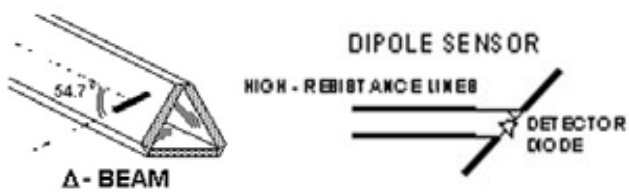

SAR is assessed with a calibrated probe which moves at a default height of 4mm from the centre of the diode, which is mounted to the sensor, to the phantom surface (in the Z Axis). The 4mm offset height has been selected so as to minimize any resultant boundary effect due to the probe being in close proximity to the phantom surface.

The following algorithm is an example of the function used by the system for linearization of the output from the probe when measuring complex modulation schemes.

$$V_i = U_i + U_i^2 \cdot \frac{cf}{dcp_i}$$

© 2005 APREL Laboratories
E.& O.E.

This report shall not be reproduced, except in full, without written approval of APREL Laboratories

4.2 Isotropic E-Field Probe Specification

Calibration in Air	Frequency Dependent Below 2GHz Calibration in air performed in a TEM Cell Above 2GHz Calibration in air performed in waveguide
Sensitivity	0.60 µV/(V/m)^2 to 1.25 µV/(V/m)^2
Dynamic Range	0.01 W/kg to 100 W/kg
Isotropic Response	Better than 0.2dB in air Better than 0.05dB in tissue
Diode Compression Point (DCP)	Calibrated for Specific Frequency typically 95mV +/- 10%
Probe Tip Radius	<5mm
Sensor Offset	1.56 (+/-0.02mm)
Probe Length	290mm
Video Bandwidth	@ 500 Hz: 1 dB @ 1.02 KHz: 3 dB
Boundary Effect	Less than 2% for distances greater than 2.4mm
Spatial Resolution	Better than 2.5mm

4.3 Boundary Detection Unit and Probe Mounting Device

ALSAS-10U incorporates a boundary detection unit with a sensitivity of 0.05mm for detecting all types of surfaces. The robust design allows for detection during probe tilt (probe normalize) exercises, and utilizes a second stage emergency stop. The signal electronics are fed directly into the robot controller for high accuracy surface detection in lateral and axial detection modes (X, Y, & Z).

The probe is mounted directly onto the Boundary Detection unit for accurate tooling and displacement calculations controlled by the robot kinematics. The probe is connect to an isolated probe interconnect where the output stage of the probe is fed directly into the amplifier stage of the Daq-Paq.

51 Spectrum Way
Ottawa ON Canada K2R 1E6
www.aprel.com
info@aprel.com
Phone (613) 820-2730
Fax (613) 820-4161
© 2005 APREL Laboratories
E.& O.E.
This report shall not be reproduced, except in full, without written approval of APREL Laboratories

4.4 Daq-Paq (Analog to Digital Electronics)

ALSAS-10U incorporates a fully calibrated Daq-Paq (analog to digital conversion system) which has a 4 channel input stage, sent into an amplifier module. The input signal is amplified accordingly so as to offer a dynamic range from 5µV to 800mV. Integration of the fields measured is carried out at board level utilizing a Co-Processor which then sends the measured fields down into the main computational module in digitized form via an RS232 communications port. Probe linearization and duty cycle compensation is carried out within the main Daq-Paq module.

ADC	16 Bit
Amplifier Range	30 µV to +200 mV (16 bit resolution: 4µV, 400mV)
Field Integration	Local Co-Processor utilizing proprietary integration algorithms
Number of Input Channels	4 in total 3 dedicated and 1 spare
Communication	Packet data via RS232

© 2005 APREL Laboratories
E.& O.E.

This report shall not be reproduced, except in full, without written approval of APREL Laboratories

4.5 Axis Articulated Robot

ALSAS-10U utilizes a six axis articulated robot, which is controlled using a Pentium based real-time movement controller. The movement kinematics engine utilizes proprietary (Thermo CRS) interpolation and extrapolation algorithms, which allow full freedom of movement for each of the six joints within the working envelope. Utilization of joint 6 allows for full probe rotation with a tolerance better than 0.05mm around the central axis.

Robot/Controller Manufacturer	Thermo CRS
Number of Axis	Six independently controlled axis
Positioning Repeatability	0.05mm
Controller Type	Single phase Pentium based C500C
Robot Reach	710mm
Communication	RS232 and LAN compatible

4.6 ALSAS Universal Workstation

ALSAS Universal workstation was developed with a strong engineering focus taking into consideration flexibility and engineering needs, and the necessity to have integrated system which will allow for repeatability and fast adaptability. ALSAS workstation technology is stable and robust in structure, but at the same time flexible so that users can do calibration, testing and measurements using different types of phantoms with one set up, which significantly speeds up the measurement process.

The workstation incorporates a modular structure which can be easily adapted to specific engineering requirements and needs. Phantoms which are self contained modular units are easily located, removable and swappable. Three fully configurable shelves allow for setting up of a test device in a way which can either utilize the APREL Laboratories device positioner, or custom designed units. When using the modular shelf for positioning of a device, additional loading characteristics have been avoided.

The workstation has been constructed entirely out of composite wood and Canadian maple, with all metallic fasteners kept at a compliant distance from the Device under test.

51 Spectrum Way
Ottawa ON Canada K2R 1E6
www.aprel.com
info@aprel.com
Phone (613) 820-2730
Fax (613) 820-4161
© 2005 APREL Laboratories
E.& O.E.
This report shall not be reproduced, except in full, without written approval of APREL Laboratories

4.7 Universal Device Positioner

The APREL Laboratories universal device positioner has been developed so as to allow complete freedom of movement of the DUT. Developed to hold a DUT in a free-space scenario any additional loading attributable to the material used in the construction of the positioner has been eliminated. Repeatability has been enhanced through the linear scales which form the design used to indicate positioning for any given test scenario in all major axes. A 15° tilt indicator has been included for the of aid cheek to tilt movements for head SAR analysis. Overall uncertainty for measurements have been reduced due to the design of the Universal device positioner, which allows positioning of a device in as near to a free-space scenario as possible, and by providing the means for complete repeatability.

Length	201mm
Width	140mm
Height	222mm
Weight	1.95kg
Number of Axis	6 axis freedom of movement
Translation Along MB Line	+/- 76.2mm
Translation Along NF Line	+/- 38.1mm
Translation Along Z Axis	+/- 25.4mm (expandable to 500mm)
Rotation Around MB Line (yaw)	+/- 10°
Rotation Around NF Line (pitch)	+/- 30°
Rotation Around Z Axis (roll)	360° full circle
Minimum Grip Range	0mm
Maximum Grip	152mm
Maximum Distance from Device to Positioner Material	40mm
Tilt Movement	Full movement with predefined 15° guide

51 Spectrum Way
Ottawa ON Canada K2R 1E6
www.aprel.com
info@aprel.com
Phone (613) 820-2730
Fax (613) 820-4161
© 2005 APREL Laboratories
E.& O.E.
This report shall not be reproduced, except in full, without written approval of APREL Laboratories

4.8 Phantom Types

The ALSAS-10U has been designed so as to allow the integration of multiple phantom types. This includes but is not limited to the APREL Laboratories SAM Phantoms fully compliant with IEEE 1528, Universal Phantom, and Universal Flat.

4.8.1 APREL SAM Phantoms

The APREL Laboratories SAM phantoms have been designed so as to aid repeatability and positioning for any DUT. Developed using the IEEE SAM CAD file they are fully compliant with the requirements for both IEEE 1528 and FCC Supplement C. Both the left and right SAM phantoms are interchangeable, transparent and include the IEEE 1528 grid with visible NF and MB lines.

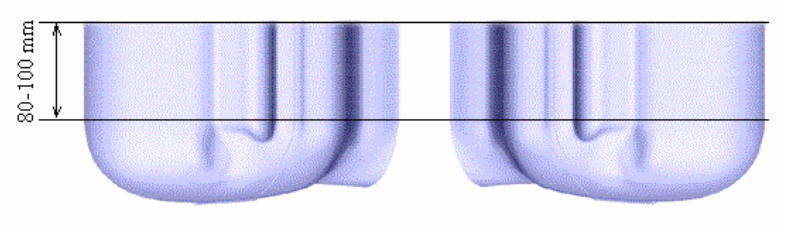

Compliant Standards	IEEE-1528, IEC 62209, CENELEC, and others
Manufacturing Process	Injection molded
Material	Composite urethane
Manufacturing Tolerance	+/- 0.2mm
Frame Material	Corian
Tissue Simulation Volume	7 ltr with 15cm tissue
Thickness	2mm nominally 6mm at NF/MB intersection
Loss Tangent	<0.05
Relative Permittivity	<5
Resistant to Solvents	Resistant to all solvents detailed in IEEE 1528
Load Deflection	<1mm with sugar water compositions

© 2005 APREL Laboratories
E.& O.E.

This report shall not be reproduced, except in full, without written approval of APREL Laboratories

4.8.2 APREL Laboratories Universal Phantom

The APREL Laboratories Universal Phantom has been developed as an engineering tool for both compliance and development. It is also used on the ALSAS-10U as a system validation phantom. The unique design allows repeatable measurements for all devices, including handsets, PDA units, laptop computers, and validation dipoles. The APREL Laboratories Universal Phantom has been fully validated both experimentally from 800MHz to 6GHz and numerically using XFDTD numerical software. The shell thickness is 2mm overall, with a 4mm spacer located at the NF/MB intersection providing an overall thickness of 6mm in line with the requirements of IEEE-1528. The design allows for fast and accurate measurements, of handsets, by allowing the conservative SAR to be evaluated at on frequency for both left and right head experiments in one measurement. The phantom is surrounded by a Corian frame, which adds additional support and load bearing characteristics.

Compliant Standards	IEEE-1528, IEC 62209, CENELEC, and others
Frequency Range	800MHz to 6GHz
Material	Vivac
Manufacturing Tolerance	+/- 0.2mm
Frame Material	Corian
Tissue Simulation Volume	8 ltr with 15cm tissue
Thickness	2mm nominally 6mm at NF/MB intersection
Loss Tangent	<0.05
Relative Permittivity	<5
Resistant to Solvents	Resistant to all solvents detailed in IEEE 1528
Load Deflection	<1% Length with sugar water compositions
Dimensions	Length 220mm x breadth 170mm

© 2005 APREL Laboratories
E.& O.E.

This report shall not be reproduced, except in full, without written approval of APREL Laboratories

4.9 Validation Dipoles

APREL Laboratories utilize dipoles based on the IEEE-1528 standard, and have ensured that they comply with mechanical and electrical specifications in line with the requirements of both IEEE and FCC Supplement C. the table below provides details for the mechanical and electrical specifications for the dipoles used by APREL Laboratories.

Body validation target numbers have been derived using XFDTD numerical software, and validated experimentally.

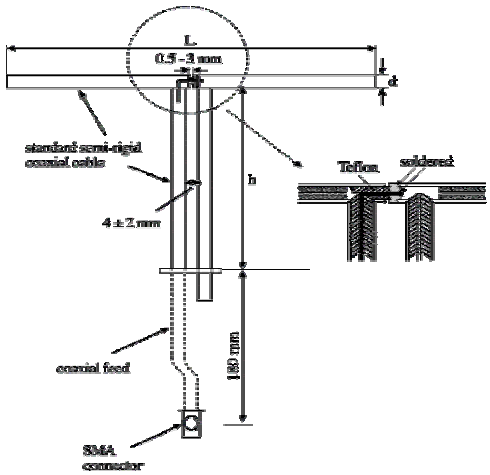

APREL Laboratories have developed high frequency dipoles based on current scientific research carried both experimentally and numerically here at the APREL Laboratories site. Mechanical and electrical parameters for the dipoles have been established using experimental and numerical techniques, and target SAR values have been established following IEC methodologies. The results of the experimental and numerical research have been published and released for peer review.

Frequency (MHz)	*L* (mm)	*h* (mm)	*d* (mm)
300	396.0	250.0	6.0
450	270.0	167.8	6.0
835	161.0	89.8	3.6
900	149.0	83.3	3.6
1450	89.1	51.7	3.6
1800	72.0	41.7	3.6
1900	68.0	39.5	3.6
2000	64.5	37.5	3.6
2450	51.5	30.4	3.6
3000	41.5	25.0	3.6
5200	23.6	X	3.6
5800	21.6	X	3.6

© 2005 APREL Laboratories
E.& O.E.

This report shall not be reproduced, except in full, without written approval of APREL Laboratories

5.0 Tissue Simulation Fluid

Tissue simulation fluids in the frequency range of 450MHz to 2450MHz are based on IEEE-1528 and FCC Supplement C guidelines. All fluids meet the dielectric specifications as outlined in the above standards (within allowable tolerances) and are calibrated on a regular basis, to maintain stability. The recipes used along with the dielectric target values are included in the table below.

Ingredients (% Weight)	450 MHz Head	835 MHz Head	915 MHz Head	1900 MHz Head	2450 MHz Head
Water	38.56	41.45	41.05	54.9	62.7
Salt	3.95	1.45	1.35	0.18	0.5
Sugar	56.32	56.0	56.5	x	x
HEC	0.98	1.0	1.0	x	x
Bactericide	0.19	0.1	0.1	0.1	X
Triton-X	X	X	X	X	36.8
DGBE	X	X	X	44.92	x
ε^r	43.42	42.54	42.0	39.9	39.8
δ	0.85	0.91	1.0	1.42	1.88

Ingredients (% Weight)	450 MHz Body	835 MHz Body	915 MHz Body	1900 MHz Body	2450 MHz Body
Water	51.16	52.4	56.0	40.4	73.2
Salt	1.49	1.4	0.76	0.5	0.04
Sugar	46.78	45.0	41.76	58.0	X
HEC	0.52	1.0	1.21	1.0	X
Bactericide	0.05	0.1	0.27	0.1	X
Triton-X	X	X	X	X	X
DGBE	X	X	X	X	26.7
ε^r	58.0	56.1	56.8	54.0	52.5
δ	0.83	0.95	1.07	1.45	1.78

NOTE. Recipes are based on those presented in FCC Supplement C Page 36.

For frequencies above 2450MHz recipes are presented in a separate appendix.

51 Spectrum Way
Ottawa ON Canada K2R 1E6
© 2005 APREL Laboratories
E.& O.E.

www.aprel.com
info@aprel.com
Phone (613) 820-2730
Fax (613) 820-4161
This report shall not be reproduced, except in full, without written approval of APREL Laboratories

5.1 Tissue Calibration Procedure Using a Coaxial Probe

The VNA (Vector Network Analyzer) is configured and calibrated for the frequency of the simulated tissue which has to be assessed. The Coaxial probe is then calibrated in line with the tissue frequency using an open, short, and De-Ionized water routine. The sample of simulated tissue is placed into a non-metallic container for use during the calibration. The temperature of the simulated tissue sample is measured. The probe head is then completely immersed in the simulated tissue sample (the probe is held in place using a non metallic probe holder). The simulated tissue sample is then measured to assess the permittivity and conductivity.

5.2 Tissue Calibration Results

Tissue used during the SAR assessment is calibrated prior to use in the measurement process. APREL Laboratories use the co-axial probe method for all tissue calibration exercises. Tissue which is being used over a period of 24 hours is re-calibrated to ensure that no change to the dielectric properties will affect the SAR measurement process. The table below provides details of the results from the tissue equivalent dielectric calibration.

Calibrated By	Calibration Date	Frequency MHz	Tissue Type	Epsilon (ε^r)	Sigma (δ)
Yi Pan	19-04-2005	2450	Body	54.12	2.01
Yi Pan	19-04-2005	2450	Body	54.12	2.01

© 2005 APREL Laboratories
E.& O.E.

This report shall not be reproduced, except in full, without written approval of APREL Laboratories

6.0 System Validation

ALSAS-10U is fully validated prior to the SAR assessment of the DUT following methodologies presented in IEEE-1528 section 8. The system is validated using tissue which has been calibrated within a 24 hour period. When the measurement process exceeds a 24 hour period a secondary system validation is executed and the results presented within this test report. The graphic plots resulting from the system validation are included in Appendix A SAR plots.

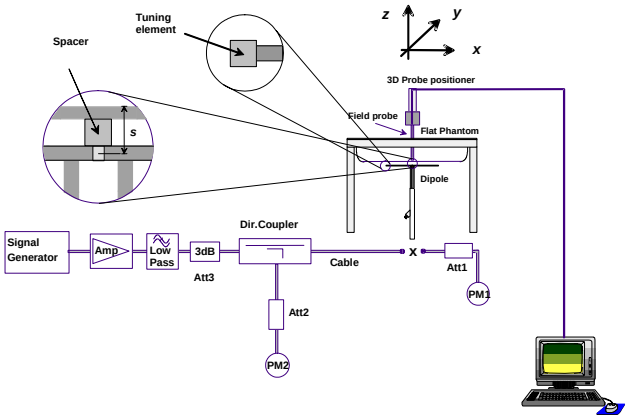

Date	Validation Frequency (MHZ)	Dipole Separation Distance mm	Power W	Dipole	SAR 1g W / kg	Target 1g W / kg	Delta %
19-04-2005	2450	10	1.0	AL-CD10	52.0	52.4	1

Currently no standards are in place for validating a system while using body tissue. APREL Laboratories have conducted research using XFDTD to assess the target validation numbers while using body tissue. It should be noted that the target validation numbers presented in IEEE-1528 have been derived using FDTD methodologies.

51 Spectrum Way
Ottawa ON Canada K2R 1E6
© 2005 APREL Laboratories
E.& O.E.

www.aprel.com
info@aprel.com
Phone (613) 820-2730
Fax (613) 820-4161
This report shall not be reproduced, except in full, without written approval of APREL Laboratories

6.1 Experimental Results Summary

The results for each experimental assessment are contained within this section. Where any deviation has been made from the given procedures contained within IEEE-1528 or FCC Supplement C this has been described accordingly.

6.2 SAR Measurement Procedure

The ALSAS-10U calculates SAR using the following equation,

$$SAR = \frac{\sigma |E|^2}{\rho}$$

σ: represents the simulated tissue conductivity
ρ: represents the tissue density

The DUT is set to transmit at the required power in line with product specification, at each frequency relating to the LOW, MID, and HIGH channel settings.

For larger transmitting devices pre-scans are made on the device to establish the location for the transmitting antenna, using a large area scan in either air or tissue simulation fluid.

The DUT is located against either the Universal Phantom or SAM (left/right) Phantoms where the maximum area scan dimensions are larger than the physical size of the resonating antenna. When the scan size is not large enough to cover the peak SAR distribution, the scan area is modified by either extending the area scan size in both the X and Y directions, or the device is shifted within the predefined area.

The area scan is then run to establish the peak SAR location (interpolated resolution set at $1mm^2$) which is then used to orient the center of the zoom scan. The zoom scan is then executed and the 1g and 10g averages are derived from the zoom scan volume (interpolated resolution set at $1mm^3$). Normalize functions to keep the probe normal to the phantom surface are executed where necessary.

6.3 SAR Exposure Limits

SAR assessments have been made in line with the requirements of IEEE-1528, FCC Supplement C, and comply with ANSI/IEEE C95.1-1992 “Uncontrolled Environments” limits. These limits apply to a location which is deemed as “Uncontrolled Environment” which can be described as a situation where the general public may be exposed to an RF source with no prior knowledge or control over their exposure.

Type of Exposure	**Uncontrolled Environment Limit**
Spatial Peak SAR (1g cube tissue for brain or body)	**1.60 W/kg**
Spatial Average SAR (whole body)	**0.08 W/kg**
Spatial Peak SAR (10g for hands, feet, ankles and wrist)	**4.00 W/kg**

© 2005 APREL Laboratories
E.& O.E.
This report shall not be reproduced, except in full, without written approval of APREL Laboratories

6.4 Equipment List

APREL Laboratories utilize the following equipment.

Equipment Description	Asset / Serial Number	Calibration Due Date
ALSAS-10U	301571	Prior to Test
Boundary Detection Unit	301572	Calibrated Once
Daq-Paq	301573	6 Jan 2006
Pentium 4 Workstation	301574	Not Required
Signal Generator	301468	September 2005
Gigatronics Power Meter	301393	October 2005
Gigatronics Broad Band Power Sensor	301394	October 2005
HP-Directional Coupler	100251	October 2005
APREL Laboratories 800-4200MHz 12W Amplifier	301577	Prior to Test
APREL Laboratories 2450MHz Validation Dipole	301581	November 2006
APREL Laboratories E-020 E-Field Probe	209	December 2005
40MHz -20GHz VNA	301382	January 2005
TRL Calibration Kit	301582	January 2006
APREL Laboratories Coaxial Probe (Dielectric Probe Kit)	100757	Prior to Test
APREL Laboratories Universal Phantom	301511	Calibrated Once
APREL Laboratories SAM Phantom LHS	301500	Calibrated Once
APREL Laboratories SAM Phantom RHS	301501	Calibrated Once
APREL Laboratories 15mm Dipole Separation Kit	301546	Calibrated Once
APREL Laboratories 10mm Dipole Separation Kit	301547	Calibrated Once
APREL Laboratories 5-6GHz 2 W Amplifier	NYA	March 2006
APREL Laboratories MMW Directional Coupler	NYA	March 2006
APREL Laboratories 5240MHz Validation Dipole	301460	March 2006
APREL Laboratories 5800MHz Validation Dipole	PT-015-a	March 2006
ALSAS-10 Device Positioner ALS-H-E-SET-2	ALS-H-E-SET-2-LAB1	Not Required

© 2005 APREL Laboratories
E.& O.E.

This report shall not be reproduced, except in full, without written approval of APREL Laboratories

6.5 SAR Measurement Results
Dell-BG B Conversion Tahiti

Power	802.11b 18.2dBm 802.11g 16.5dBm
DUT Position	LCD Top Left Side
Separation	0mm
Antenna Type	Internal
Antenna Manufacturer	HITACHI
Antenna Location	Left Hand Side
Power Mode	Mains
Tx Frequency	2412-2462MHz
Duty Cycle	95%
Epsilon	54.12
Sigma	2.01
Tissue Depth	15cm
Phantom Type	Universal
DUT Workstation Location	Centre
Device Positioner	ALS-H-E-SET-1
Test Date	19-04-2005 20-04-2005
Test Engineer	Y-Chen

Mode	**Channel**	**Frequency MHz**	**1g SAR W/kg**
802.11b	Low-1	2412	0.458
802.11b	Mid-6	2437	0.431
802.11b	High-11	2462	0.354
802.11g	Low-1	2412	0.125
802.11g	Mid-6	2437	0.156
802.11g	High-11	2462	0.154

SAR Limit	**Conservative Measured SAR**
1.6 W/kg 1gram Average Maximum	0.458 W/kg 1gram Average

SAR Plots for Conservative SAR Included in Appendix A.

51 Spectrum Way
Ottawa ON Canada K2R 1E6
www.aprel.com
info@aprel.com
Phone (613) 820-2730
Fax (613) 820-4161
© 2005 APREL Laboratories
E.& O.E.
This report shall not be reproduced, except in full, without written approval of APREL Laboratories

Dell-BG B Conversion Tahiti

Power	802.11b 18.2dBm 802.11g 16.5dBm
DUT Position	Front LCD Closed LHS
Separation	0mm
Antenna Type	Internal
Antenna Manufacturer	HITACHI
Antenna Location	Left Hand Side
Power Mode	Mains
Tx Frequency	2412-2462MHz
Duty Cycle	95%
Epsilon	54.12
Sigma	2.01
Tissue Depth	15cm
Phantom Type	Universal
DUT Workstation Location	Centre
Device Positioner	ALS-H-E-SET-1
Test Date	19-04-2005 20-04-2005
Test Engineer	Y-Chen

Mode	**Channel**	**Frequency MHz**	**1g SAR W/kg**
802.11b	Low-1	2412	0.328
802.11b	Mid-6	2437	0.185

SAR Limit	**Conservative Measured SAR**
1.6 W/kg 1gram Average Maximum	0.328 W/kg 1gram Average

SAR Plots for Conservative SAR Included in Appendix A.

51 Spectrum Way
Ottawa ON Canada K2R 1E6
© 2005 APREL Laboratories
E.& O.E.

www.aprel.com
info@aprel.com
Phone (613) 820-2730
Fax (613) 820-4161
This report shall not be reproduced, except in full, without written approval of APREL Laboratories

6.6 Additional Information

6.6.1 Positions

APREL Laboratories assessed the laptop in multiple positions with and without batteries, and it was found that the conservative SAR was found while the device was connected to the mains. Additional positions where the SAR was measured were found to be significantly lower, and digital images of the setup have been included for reference.

6.6.2 Device Activation Software

For the purpose of the tests conducted and documented within this report the device was set to transmit utilizing proprietary software supplied by the manufacturer which controls the frequency, power, and data rate. APREL Laboratories calibrate the power for each channel to be close to that specified by the manufacturer prior to the tests using both the proprietary software and power meter connected to a broad band power sensor.

© 2005 APREL Laboratories
E.& O.E.
This report shall not be reproduced, except in full, without written approval of APREL Laboratories

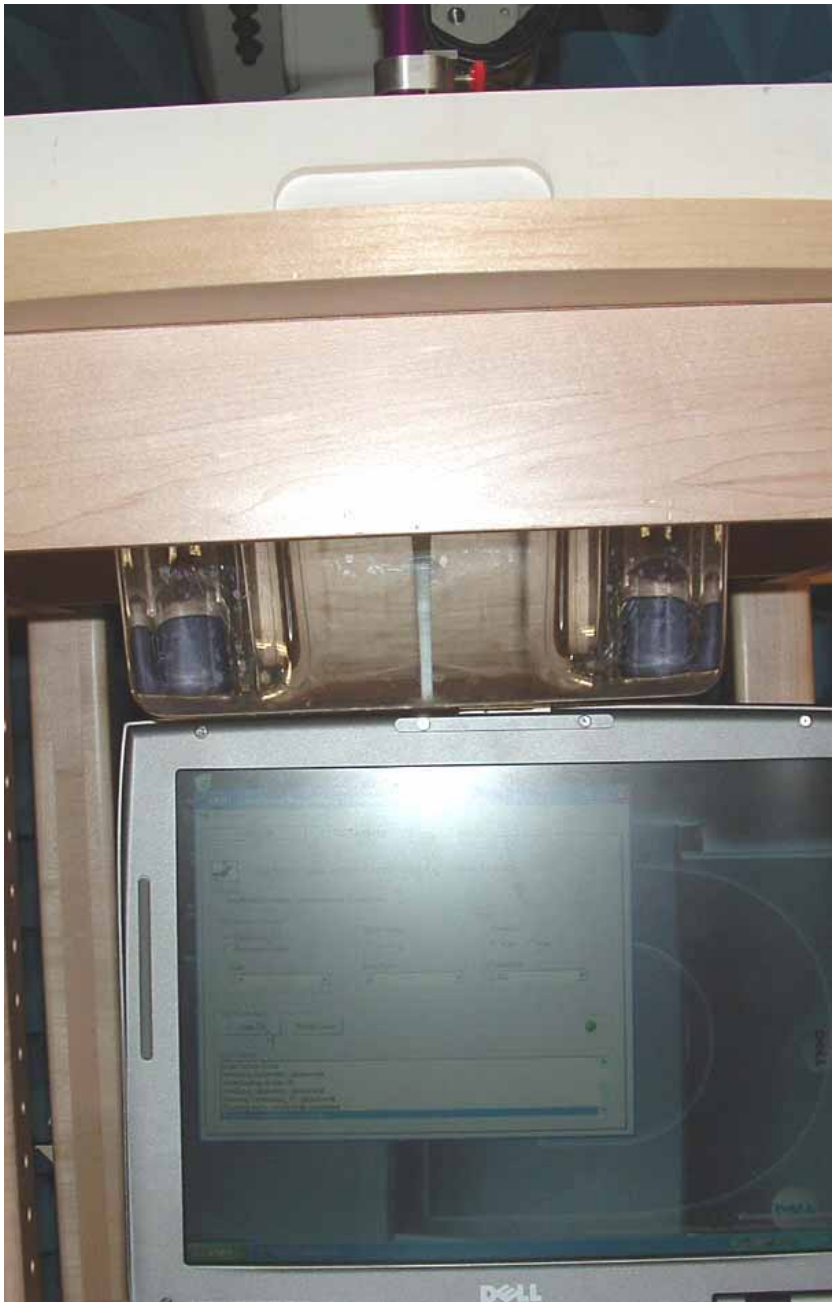

51 Spectrum Way
Ottawa ON Canada K2R 1E6
© 2005 APREL Laboratories
E.& O.E.

www.aprel.com
info@aprel.com
Phone (613) 820-2730
Fax (613) 820-4161
This report shall not be reproduced, except in full, without written approval of APREL Laboratories

51 Spectrum Way
Ottawa ON Canada K2R 1E6
© 2005 APREL Laboratories
E.& O.E.

www.aprel.com
info@aprel.com
Phone (613) 820-2730
Fax (613) 820-4161
This report shall not be reproduced, except in full, without written approval of APREL Laboratories

51 Spectrum Way
Ottawa ON Canada K2R 1E6
© 2005 APREL Laboratories
E.& O.E.

www.aprel.com
info@aprel.com
Phone (613) 820-2730
Fax (613) 820-4161
This report shall not be reproduced, except in full, without written approval of APREL Laboratories