TEST REPORT

Application No.:	KSCR2306000989AT
FCC ID:	E2KFM350GL
Applicant:	Dell Inc.
Address of Applicant:	One Dell Way, Round Rock, Texas 78682; USA
Manufacturer:	Dell Inc.
Address of Manufacturer:	One Dell Way, Round Rock, Texas 78682; USA
Equipment Under Test (EUT):	
EUT Name:	5G Module
Model No.:	FM350-GL
Trade Mark:	FIBOCOM
Standard(s):	FCC Part 96.47
	FCC KDB 940660 D01 Part 96 CBRS Eqpt v03
	WINNF-TS-0122-V1.0.2 CBRS CBSD Test Specification
	WINNF-18-IN-00178 CBRS End User Device as UUT Test Guidelines
Date of Receipt:	2023-04-28
Date of Test:	2023-04-28 to 2023-05-05
Date of Issue:	2023-06-08
Test Result:	**Pass***

* In the configuration tested, the EUT complied with the standards specified above.

Eric Lin
Laboratory Manager

Unless otherwise agreed in writing, this document is issued by the Company subject to its General Conditions of Service printed overleaf, available on request or accessible at https://www.sgs.com/en/Terms-and-Conditions. Attention is drawn to the limitation of liability, indemnification and jurisdiction issues defined therein. Any holder of this document is advised that information contained hereon reflects the Company's findings at the time of its intervention only and within the limits of Client's instructions, if any. The Company's sole responsibility is to its Client and this document does not exonerate parties to a transaction from exercising all their rights and obligations under the transaction documents. This document cannot be reproduced except in full, without prior written approval of the Company. Any unauthorized alteration, forgery or falsification of the content or appearance of this document is unlawful and offenders may be prosecuted to the fullest extent of the law. Unless otherwise stated the results shown in this test report refer only to the sample(s) tested and such sample(s) are retained for 30 days only.
Attention: To check the authenticity of testing /inspection report & certificate, please contact us at telephone: (86-755) 8307 1443, or email: CN.Doccheck@sgs.com

No.10 Weiye Road, Development Zone, Kunshan, Jiangsu, China 215300 t(86-512) 5735 5888 f(86-512) 57370818 www.sgsgroup.com.cn
中国・江苏・昆山开发区伟业路10号 邮编：215300 t(86-512) 57355888 f(86-512) 57370818 sgs.china@sgs.com

Revision Record			
Version	**Description**	**Date**	**Remark**
00	Changed ID and applicant, manufacturer information	2023-06-08	Based on KSCR230400073101

Authorized for issue by:				
		Damon zhou		
		Damon Zhou / Project Engineer		
		Eric Lin		
		Eric Lin / Reviewer		

Unless otherwise agreed in writing, this document is issued by the Company subject to its General Conditions of Service printed overleaf, available on request or accessible at https://www.sgs.com/en/Terms-and-Conditions. Attention is drawn to the limitation of liability, indemnification and jurisdiction issues defined therein. Any holder of this document is advised that information contained hereon reflects the Company's findings at the time of its intervention only and within the limits of Client's instructions, if any. The Company's sole responsibility is to its Client and this document does not exonerate parties to a transaction from exercising all their rights and obligations under the transaction documents. This document cannot be reproduced except in full, without prior written approval of the Company. Any unauthorized alteration, forgery or falsification of the content or appearance of this document is unlawful and offenders may be prosecuted to the fullest extent of the law. Unless otherwise stated the results shown in this test report refer only to the sample(s) tested and such sample(s) are retained for 30 days only.
Attention: To check the authenticity of testing /inspection report & certificate, please contact us at telephone: (86-755) 8307 1443, or email: CN.Doccheck@sgs.com

No.10 Weiye Road, Development Zone, Kunshan, Jiangsu, China 215300 t(86-512) 5735 5888 f(86-512) 57370818 www.sgsgroup.com.cn
中国・江苏・昆山开发区伟业路10号 邮编：215300 t(86-512) 57355888 f(86-512) 57370818 sgs.china@sgs.com

Member of the SGS Group (SGS SA)

2 Test Summary

Item	Standard	Test Case ID	Result
End User Device additional requirement	96.47	/	Pass

The UUT is an End User Device. According to the specifications of the manufacturer, it must comply with the requirements of the following standards:

Test standards:

FCC Part 96.47

FCC KDB 940660 D01 Part 96 CBRS Eqpt v03

WINNF-TS-0122-V1.0.2 CBRS CBSD Test Specification

WINNF-18-IN-00178 CBRS End User Device as UUT Test Guidelines

Remark：FCC ID:ZMOFM350GL has enabled n48(Date of Grant: 05/26/2023) by software. FCC ID: E2KFM350GL was originally based on FM350-GL change ID, referencing all reports from ZMOFM350GL and both software and hardware remain unchanged.

Based on the above, FCC ID: E2KFM350GL data in this report are based on the previous FCC ID: ZMOFM350GL with the report number KSCR230400073101 issued on 2023/05/05.

Unless otherwise agreed in writing, this document is issued by the Company subject to its General Conditions of Service printed overleaf, available on request or accessible at https://www.sgs.com/en/Terms-and-Conditions. Attention is drawn to the limitation of liability, indemnification and jurisdiction issues defined therein. Any holder of this document is advised that information contained hereon reflects the Company's findings at the time of its intervention only and within the limits of Client's instructions, if any. The Company's sole responsibility is to its Client and this document does not exonerate parties to a transaction from exercising all their rights and obligations under the transaction documents. This document cannot be reproduced except in full, without prior written approval of the Company. Any unauthorized alteration, forgery or falsification of the content or appearance of this document is unlawful and offenders may be prosecuted to the fullest extent of the law. Unless otherwise stated the results shown in this test report refer only to the sample(s) tested and such sample(s) are retained for 30 days only.
Attention: To check the authenticity of testing /inspection report & certificate, please contact us at telephone: (86-755) 8307 1443, or email: CN.Doccheck@sgs.com

No.10 Weiye Road, Development Zone, Kunshan, Jiangsu, China 215300 t(86-512) 5735 5888 f(86-512) 57370818 www.sgsgroup.com.cn
中国・江苏・昆山开发区伟业路10号 邮编：215300 t(86-512) 57355888 f(86-512) 57370818 sgs.china@sgs.com

3 Contents

Page

1 COVER PAGE 1

2 Test Summary 3

3 Contents 4

4 General Information 5

4.1 Details of E.U.T. 5
4.2 Measurement Uncertainty 5
4.3 Description of Support Units 5
4.4 Test Location 6
4.5 Test Facility 6
4.6 Deviation from Standards 6
4.7 Abnormalities from Standard Conditions 6

5 Equipment List 7

6 Test Method and Environment 8

6.1 End User Device Conformance and Performance 8
6.2 Test Environment 8
6.3 Test Requirement 8
6.4 Test Procedure 9
6.5 Test Setup 10
6.6 Test Result 11

7 Test Setup Photographs 13

Unless otherwise agreed in writing, this document is issued by the Company subject to its General Conditions of Service printed overleaf, available on request or accessible at https://www.sgs.com/en/Terms-and-Conditions. Attention is drawn to the limitation of liability, indemnification and jurisdiction issues defined therein. Any holder of this document is advised that information contained hereon reflects the Company's findings at the time of its intervention only and within the limits of Client's instructions, if any. The Company's sole responsibility is to its Client and this document does not exonerate parties to a transaction from exercising all their rights and obligations under the transaction documents. This document cannot be reproduced except in full, without prior written approval of the Company. Any unauthorized alteration, forgery or falsification of the content or appearance of this document is unlawful and offenders may be prosecuted to the fullest extent of the law. Unless otherwise stated the results shown in this test report refer only to the sample(s) tested and such sample(s) are retained for 30 days only.
Attention: To check the authenticity of testing /inspection report & certificate, please contact us at telephone: (86-755) 8307 1443, or email: CN.Doccheck@sgs.com

No.10 Weiye Road, Development Zone, Kunshan, Jiangsu, China 215300 t(86-512) 5735 5888 f(86-512) 57370818 www.sgsgroup.com.cn
中国・江苏・昆山开发区伟业路10号 邮编：215300 t(86-512) 57355888 f(86-512) 57370818 sgs.china@sgs.com

Member of the SGS Group (SGS SA)

4 General Information

4.1 Details of E.U.T.

Power supply:	DC3.3V
Sample Type:	End User device
Transmitter Frequency Band:	5GNR: n48
Transmitter Frequency Range:	3550~3700MHz
Antenna Type:	External Antenna
Antenna information:	N48: M2
Hardware Version:	V1.0.6
Software Version:	81600.0000.00.29.22.06
Antenna Gain:	1dBi

4.2 Measurement Uncertainty

No.	Item	Measurement Uncertainty
1	Radio Frequency	± 7.25 x 10^{-8}
2	RF conducted power	± 0.75dB
3	Temperature test	± 1°C
4	Humidity test	± 3%
5	Supply voltages	± 1.5%
6	Time	± 3%

4.3 Description of Support Units

Description	Manufacturer	Model No.	Serial No.
5GC	astir	astir_5GC	A372768X0507398
Router	TP-Link	TL-R860+	1175379002425
Base Band Unit	BTI	sCELL- G52091NAX	L603JESE1I
Remote Radio Unit	BTI	RU4370 (FCC ID: WBK-RU4370)	C0214921000004S

Unless otherwise agreed in writing, this document is issued by the Company subject to its General Conditions of Service printed overleaf, available on request or accessible at https://www.sgs.com/en/Terms-and-Conditions. Attention is drawn to the limitation of liability, indemnification and jurisdiction issues defined therein. Any holder of this document is advised that information contained hereon reflects the Company's findings at the time of its intervention only and within the limits of Client's instructions, if any. The Company's sole responsibility is to its Client and this document does not exonerate parties to a transaction from exercising all their rights and obligations under the transaction documents. This document cannot be reproduced except in full, without prior written approval of the Company. Any unauthorized alteration, forgery or falsification of the content or appearance of this document is unlawful and offenders may be prosecuted to the fullest extent of the law. Unless otherwise stated the results shown in this test report refer only to the sample(s) tested and such sample(s) are retained for 30 days only.
Attention: To check the authenticity of testing /inspection report & certificate, please contact us at telephone: (86-755) 8307 1443, or email: CN.Doccheck@sgs.com
No.10 Weiye Road, Development Zone, Kunshan, Jiangsu, China 215300 t(86-512) 5735 5888 f(86-512) 57370818 www.sgsgroup.com.cn
中国・江苏・昆山开发区伟业路10号 邮编：215300 t(86-512) 57355888 f(86-512) 57370818 sgs.china@sgs.com
Member of the SGS Group (SGS SA)

4.4 Test Location

All tests were performed at:

Compliance Certification Services (Kunshan) Inc.

No.10 Weiye Rd, Innovation park, Eco&Tec, Development Zone, Kunshan City, Jiangsu, China.

Tel: +86 512 5735 5888 Fax: +86 512 5737 0818

No tests were sub-contracted.

Note:

1.SGS is not responsible for wrong test results due to incorrect information (e.g., max. internal working frequency, antenna gain, cable loss, etc) is provided by the applicant. (If applicable).

2.SGS is not responsible for the authenticity, integrity and the validity of the conclusion based on results of the data provided by applicant. (If applicable).

4.5 Test Facility

The test facility is recognized, certified, or accredited by the following organizations:

- **A2LA**

  Compliance Certification Services (Kunshan) Inc. is accredited by the American Association for Laboratory Accreditation (A2LA). Certificate No. 2541.01.

- **FCC**

  Compliance Certification Services (Kunshan) Inc. has been recognized as an accredited testing laboratory. Designation Number: CN1172.

- **ISED**

  Compliance Certification Services (Kunshan) Inc. has been recognized by Innovation, Science and Economic Development Canada (ISED) as an accredited testing laboratory. Company Number: 2324E

- **VCCI**

  The 3m and 10m Semi-anechoic chamber and Shielded Room of Compliance Certification Services (Kunshan) Inc. has been registered in accordance with the Regulations for Voluntary Control Measures with Registration No.: R-20134, R-11600, C-11707, T-11499, G-10216 respectively.

4.6 Deviation from Standards

None

4.7 Abnormalities from Standard Conditions

None

Unless otherwise agreed in writing, this document is issued by the Company subject to its General Conditions of Service printed overleaf, available on request or accessible at https://www.sgs.com/en/Terms-and-Conditions. Attention is drawn to the limitation of liability, indemnification and jurisdiction issues defined therein. Any holder of this document is advised that information contained hereon reflects the Company's findings at the time of its intervention only and within the limits of Client's instructions, if any. The Company's sole responsibility is to its Client and this document does not exonerate parties to a transaction from exercising all their rights and obligations under the transaction documents. This document cannot be reproduced except in full, without prior written approval of the Company. Any unauthorized alteration, forgery or falsification of the content or appearance of this document is unlawful and offenders may be prosecuted to the fullest extent of the law. Unless otherwise stated the results shown in this test report refer only to the sample(s) tested and such sample(s) are retained for 30 days only.

Attention: To check the authenticity of testing /inspection report & certificate, please contact us at telephone: (86-755) 8307 1443, or email: CN.Doccheck@sgs.com

No.10 Weiye Road, Development Zone, Kunshan, Jiangsu, China 215300 t(86-512) 5735 5888 f(86-512) 57370818 www.sgsgroup.com.cn

中国・江苏・昆山开发区伟业路10号 邮编：215300 t(86-512) 57355888 f(86-512) 57370818 sgs.china@sgs.com

5 Equipment List

Test Equipment	Manufacturer	Model No.	Inventory No.	Cal. Date (yyyy-mm-dd)	Cal. Due date (yyyy-mm-dd)
Laptop	Lenovo	Y510P	HFL000026	N/A	N/A
Spectrum Analyzer	KEYSIGHT	N9030B	KSEM021-1	2023/02/03	2024/02/02
Shield Room	YanChuang	N/A	KS301115-2	N/A	N/A
Coaxial Cable	Thermax	N/A	13	2022/09/16	2023/09/15
Attenuator	Mini-Circuits	NAT-6-2W	15542-1	N.C.R.	N.C.R.
Humidity / Temperature Indicator	Renke	RS-WS-N01-6J	1032844	2023/03/22	2024/03/21

Unless otherwise agreed in writing, this document is issued by the Company subject to its General Conditions of Service printed overleaf, available on request or accessible at https://www.sgs.com/en/Terms-and-Conditions. Attention is drawn to the limitation of liability, indemnification and jurisdiction issues defined therein. Any holder of this document is advised that information contained hereon reflects the Company's findings at the time of its intervention only and within the limits of Client's instructions, if any. The Company's sole responsibility is to its Client and this document does not exonerate parties to a transaction from exercising all their rights and obligations under the transaction documents. This document cannot be reproduced except in full, without prior written approval of the Company. Any unauthorized alteration, forgery or falsification of the content or appearance of this document is unlawful and offenders may be prosecuted to the fullest extent of the law. Unless otherwise stated the results shown in this test report refer only to the sample(s) tested and such sample(s) are retained for 30 days only.
Attention: To check the authenticity of testing /inspection report & certificate, please contact us at telephone: (86-755) 8307 1443, or email: CN.Doccheck@sgs.com
No.10 Weiye Road, Development Zone, Kunshan, Jiangsu, China 215300 t(86-512) 5735 5888 f(86-512) 57370818 www.sgsgroup.com.cn
中国・江苏・昆山开发区伟业路10号 邮编：215300 t(86-512) 57355888 f(86-512) 57370818 sgs.china@sgs.com

6 Test Method and Environment

6.1 End User Device Conformance and Performance

Test Requirement: FCC Part 96.47

Test Method: WINNF-18-IN-00178 CBRS End User Device as UUT Test Guidelines

6.2 Test Environment

Environmental Conditions: 25°C, 65%RH

6.3 Test Requirement

FCC Part 96.47

a). End User Devices may operate only if they can positively receive and decode an authorization signal transmitted by a CBSD, including the frequencies and power limits for their operation.

b). An End User Device must discontinue operations, change frequencies, or change its operational power level within 10 seconds of receiving instructions from its associated CBSD.

Unless otherwise agreed in writing, this document is issued by the Company subject to its General Conditions of Service printed overleaf, available on request or accessible at https://www.sgs.com/en/Terms-and-Conditions. Attention is drawn to the limitation of liability, indemnification and jurisdiction issues defined therein. Any holder of this document is advised that information contained hereon reflects the Company's findings at the time of its intervention only and within the limits of Client's instructions, if any. The Company's sole responsibility is to its Client and this document does not exonerate parties to a transaction from exercising all their rights and obligations under the transaction documents. This document cannot be reproduced except in full, without prior written approval of the Company. Any unauthorized alteration, forgery or falsification of the content or appearance of this document is unlawful and offenders may be prosecuted to the fullest extent of the law. Unless otherwise stated the results shown in this test report refer only to the sample(s) tested and such sample(s) are retained for 30 days only.
Attention: To check the authenticity of testing /inspection report & certificate, please contact us at telephone: (86-755) 8307 1443, or email: CN.Doccheck@sgs.com

No.10 Weiye Road, Development Zone, Kunshan, Jiangsu, China 215300 t(86-512) 5735 5888 f(86-512) 57370818 www.sgsgroup.com.cn
中国・江苏・昆山开发区伟业路10号 邮编：215300 t(86-512) 57355888 f(86-512) 57370818 sgs.china@sgs.com

Member of the SGS Group (SGS SA)

6.4 Test Procedure

Following procedure can be done by applying WINNF-TS-0122-V1.0.2 CBRS CBSD Test Specification, use the certified 5GNR Base station CBSD (FCC ID: WBK-RU4370) as companion device to show compliance with Part 96.47 requirement for End User Device (EUD):

For 5G NR:

1. Setup with frequency 3550-3570MHz and power level 8dBm/MHz;
2. Enable CBSD service ;
3. Check EUD Tx Frequency and power;
4. Disable AP service ;
5. Check EUD stops transmission within 10seconds;
6. Setup with 3590-3610MHz & power level 14dBm/MHz;
7. Enable CBSD service;
8. Check EUD Tx Frequency and power;
9. Disable CBSD service;
10. Check EUD stops transmission within 10seconds.

Unless otherwise agreed in writing, this document is issued by the Company subject to its General Conditions of Service printed overleaf, available on request or accessible at https://www.sgs.com/en/Terms-and-Conditions. Attention is drawn to the limitation of liability, indemnification and jurisdiction issues defined therein. Any holder of this document is advised that information contained hereon reflects the Company's findings at the time of its intervention only and within the limits of Client's instructions, if any. The Company's sole responsibility is to its Client and this document does not exonerate parties to a transaction from exercising all their rights and obligations under the transaction documents. This document cannot be reproduced except in full, without prior written approval of the Company. Any unauthorized alteration, forgery or falsification of the content or appearance of this document is unlawful and offenders may be prosecuted to the fullest extent of the law. Unless otherwise stated the results shown in this test report refer only to the sample(s) tested and such sample(s) are retained for 30 days only.
Attention: To check the authenticity of testing /inspection report & certificate, please contact us at telephone: (86-755) 8307 1443, or email: CN.Doccheck@sgs.com
No.10 Weiye Road, Development Zone, Kunshan, Jiangsu, China 215300 t(86-512) 5735 5888 f(86-512) 57370818 www.sgsgroup.com.cn
中国・江苏・昆山开发区伟业路10号 邮编：215300 t(86-512) 57355888 f(86-512) 57370818 sgs.china@sgs.com

6.5 Test Setup

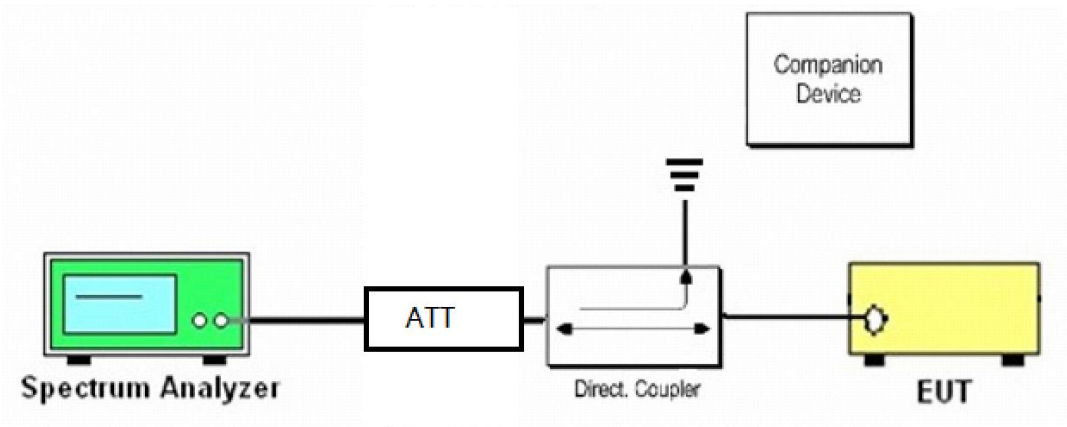

For 5G NR:

End User Device as UUT, the companion device is certified CBRS (FCC ID: WBK-RU4370)

Unless otherwise agreed in writing, this document is issued by the Company subject to its General Conditions of Service printed overleaf, available on request or accessible at https://www.sgs.com/en/Terms-and-Conditions. Attention is drawn to the limitation of liability, indemnification and jurisdiction issues defined therein. Any holder of this document is advised that information contained hereon reflects the Company's findings at the time of its intervention only and within the limits of Client's instructions, if any. The Company's sole responsibility is to its Client and this document does not exonerate parties to a transaction from exercising all their rights and obligations under the transaction documents. This document cannot be reproduced except in full, without prior written approval of the Company. Any unauthorized alteration, forgery or falsification of the content or appearance of this document is unlawful and offenders may be prosecuted to the fullest extent of the law. Unless otherwise stated the results shown in this test report refer only to the sample(s) tested and such sample(s) are retained for 30 days only.
Attention: To check the authenticity of testing /inspection report & certificate, please contact us at telephone: (86-755) 8307 1443, or email: CN.Doccheck@sgs.com
No.10 Weiye Road, Development Zone, Kunshan, Jiangsu, China 215300 t(86-512) 5735 5888 f(86-512) 57370818 www.sgsgroup.com.cn
中国・江苏・昆山开发区伟业路10号 邮编：215300 t(86-512) 57355888 f(86-512) 57370818 sgs.china@sgs.com
Member of the SGS Group (SGS SA)

6.6 Test Result

For 5GNR

[Step 1] Setup with frequency 3550-3650MHz and power level 20dBm/MHz
[Step 3] Check EUD Tx Frequency and power
EIRP PSD=-6.61+1+5=-0.61dBm/MHz, Antenna gain is 1dBi,the path loss is 5dB
[Step 5] EUD stops transmission within 10 seconds of receiving instructions from its associated CBSD.

Unless otherwise agreed in writing, this document is issued by the Company subject to its General Conditions of Service printed overleaf, available on request or accessible at https://www.sgs.com/en/Terms-and-Conditions. Attention is drawn to the limitation of liability, indemnification and jurisdiction issues defined therein. Any holder of this document is advised that information contained hereon reflects the Company's findings at the time of its intervention only and within the limits of Client's instructions, if any. The Company's sole responsibility is to its Client and this document does not exonerate parties to a transaction from exercising all their rights and obligations under the transaction documents. This document cannot be reproduced except in full, without prior written approval of the Company. Any unauthorized alteration, forgery or falsification of the content or appearance of this document is unlawful and offenders may be prosecuted to the fullest extent of the law. Unless otherwise stated the results shown in this test report refer only to the sample(s) tested and such sample(s) are retained for 30 days only.
Attention: To check the authenticity of testing /inspection report & certificate, please contact us at telephone: (86-755) 8307 1443, or email: CN.Doccheck@sgs.com

No.10 Weiye Road, Development Zone, Kunshan, Jiangsu, China 215300 t(86-512) 5735 5888 f(86-512) 57370818 www.sgsgroup.com.cn
中国・江苏・昆山开发区伟业路10号 邮编：215300 t(86-512) 57355888 f(86-512) 57370818 sgs.china@sgs.com

Member of the SGS Group (SGS SA)

[Step 6] Setup with frequency 3600-3700MHz and power level 8dBm/MHz
[Step 8] Check EUD Tx Frequency and power
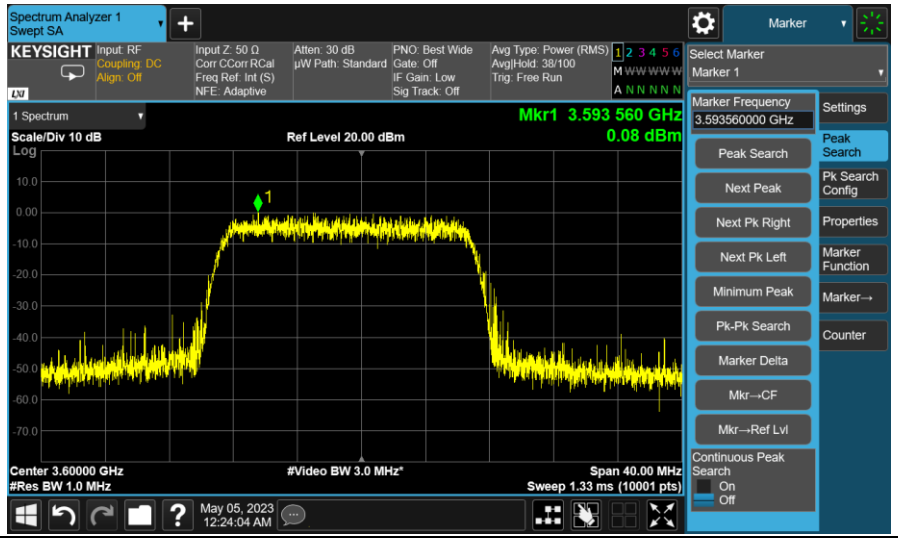
EIRP PSD=0.08+1+5=6.08dBm/MHz, Antenna gain is 1dBi,the path loss is 5dB
[Step 10] EUD stops transmission within 10 seconds of receiving instructions from its associated CBSD.
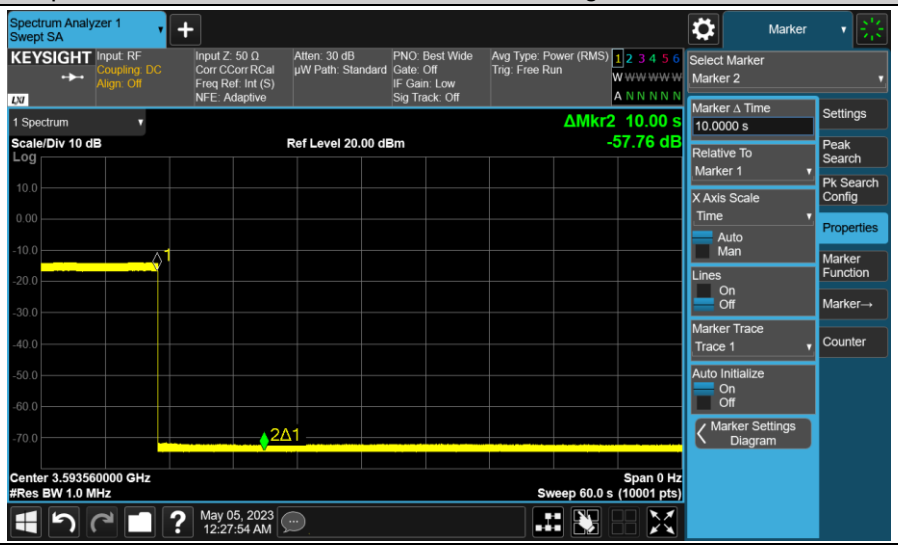

Unless otherwise agreed in writing, this document is issued by the Company subject to its General Conditions of Service printed overleaf, available on request or accessible at https://www.sgs.com/en/Terms-and-Conditions. Attention is drawn to the limitation of liability, indemnification and jurisdiction issues defined therein. Any holder of this document is advised that information contained hereon reflects the Company's findings at the time of its intervention only and within the limits of Client's instructions, if any. The Company's sole responsibility is to its Client and this document does not exonerate parties to a transaction from exercising all their rights and obligations under the transaction documents. This document cannot be reproduced except in full, without prior written approval of the Company. Any unauthorized alteration, forgery or falsification of the content or appearance of this document is unlawful and offenders may be prosecuted to the fullest extent of the law. Unless otherwise stated the results shown in this test report refer only to the sample(s) tested and such sample(s) are retained for 30 days only.
Attention: To check the authenticity of testing /inspection report & certificate, please contact us at telephone: (86-755) 8307 1443, or email: CN.Doccheck@sgs.com

No.10 Weiye Road, Development Zone, Kunshan, Jiangsu, China 215300 t(86-512) 5735 5888 f(86-512) 57370818 www.sgsgroup.com.cn
中国・江苏・昆山开发区伟业路10号 邮编：215300 t(86-512) 57355888 f(86-512) 57370818 sgs.china@sgs.com

7 Test Setup Photographs

Refer to Appendix - Photographs of EUT Constructional Details for KSCR2306000989AT

- End of the Report -

Unless otherwise agreed in writing, this document is issued by the Company subject to its General Conditions of Service printed overleaf, available on request or accessible at https://www.sgs.com/en/Terms-and-Conditions. Attention is drawn to the limitation of liability, indemnification and jurisdiction issues defined therein. Any holder of this document is advised that information contained hereon reflects the Company's findings at the time of its intervention only and within the limits of Client's instructions, if any. The Company's sole responsibility is to its Client and this document does not exonerate parties to a transaction from exercising all their rights and obligations under the transaction documents. This document cannot be reproduced except in full, without prior written approval of the Company. Any unauthorized alteration, forgery or falsification of the content or appearance of this document is unlawful and offenders may be prosecuted to the fullest extent of the law. Unless otherwise stated the results shown in this test report refer only to the sample(s) tested and such sample(s) are retained for 30 days only.
Attention: To check the authenticity of testing /inspection report & certificate, please contact us at telephone: (86-755) 8307 1443, or email: CN.Doccheck@sgs.com

No.10 Weiye Road, Development Zone, Kunshan, Jiangsu, China 215300 t(86-512) 5735 5888 f(86-512) 57370818 www.sgsgroup.com.cn
中国・江苏・昆山开发区伟业路10号 邮编：215300 t(86-512) 57355888 f(86-512) 57370818 sgs.china@sgs.com

Member of the SGS Group (SGS SA)