SAR TEST REPORT

Equipment Under Test	Mobile Internet Device
Model Number	M02M
Company Name	DELL Inc.
Company Address	One Dell Way, Round Rock, Tx 78682
Date of Receipt	2010.11.22
Date of Test(s)	2010.11.26~2010.12.02
Date of Issue	2010.12.27

Standards:

FCC OET 65 supplement C,
IEEE /ANSI C95.1 , C95.3, IEEE 1528,

In the configuration tested, the EUT complied with the standards specified above.

Remarks:

This report details the results of the testing carried out on one sample, the results contained in this test report do not relate to other samples of the same product. The manufacturer should ensure that all products in series production are in conformity with the product sample detailed in this report.

This report may only be reproduced and distributed in full. If the product in this report is used in any configuration other than that detailed in the report, the manufacturer must ensure the new system complies with all relevant standards. Any mention of SGS Taiwan Electronic & Communication Laboratory or testing done by SGS Taiwan Electronic & Communication Laboratory in connection with distribution or use of the product described in this report must be approved by SGS Taiwan Electronic & Communication Laboratory in writing.

Ricky Huang

Tested by : Ricky Huang **Date : 2010.12.27**
Asst. Supervisor

Robert Chang

Approved by : Robert Chang **Date : 2010.12.27**
Operation Manager

Unless otherwise stated the results shown in this test report refer only to the sample(s) tested and such sample(s) are retained for 90 days only.
除非另有說明，此報告結果僅對測試之樣品負責，同時此樣品僅保留90天。本報告未經本公司書面許可，不可部份複製。

This document is issued by the Company subject to its General Conditions of Service printed overleaf, available on request or accessible at www.sgs.com/terms_and_conditions.htm and, for electronic format documents, subject to Terms and Conditions for Electronic Documents at www.sgs.com/terms_e-document.htm. Attention is drawn to the limitation of liability, indemnification and jurisdiction issues defined therein. Any holder of this document is advised that information contained hereon reflects the Company's findings at the time of its intervention only and within the limits of Client's instructions, if any. The Company's sole responsibility is to its Client and this document does not exonerate parties to a transaction from exercising all their rights and obligations under the transaction documents. This document cannot be reproduced except in full, without prior written approval of the Company. Any unauthorized alteration, forgery or falsification of the content or appearance of this document is unlawful and offenders may be prosecuted to the fullest extent of the law.

Version

Version No.	Date	Description
1.0	Dec.03, 2010	Initial issue of report
1.1	Dec.06, 2010	1st modification
1.2	Dec.07, 2010	2nd modification
1.3	Dec.24, 2010	3rd modification
1.4	Dec.27, 2010	4th modification
1.5	Dec.27, 2010	5th modification

Unless otherwise stated the results shown in this test report refer only to the sample(s) tested and such sample(s) are retained for 90 days only.
除非另有說明，此報告結果僅對測試之樣品負責，同時此樣品僅保留90天。本報告未經本公司書面許可，不可部份複製。
This document is issued by the Company subject to its General Conditions of Service printed overleaf, available on request or accessible at www.sgs.com/terms_and_conditions.htm and, for electronic format documents, subject to Terms and Conditions for Electronic Documents at www.sgs.com/terms_e-document.htm. Attention is drawn to the limitation of liability, indemnification and jurisdiction issues defined therein. Any holder of this document is advised that information contained hereon reflects the Company's findings at the time of its intervention only and within the limits of Client's instructions, if any. The Company's sole responsibility is to its Client and this document does not exonerate parties to a transaction from exercising all their rights and obligations under the transaction documents. This document cannot be reproduced except in full, without prior written approval of the Company. Any unauthorized alteration, forgery or falsification of the content or appearance of this document is unlawful and offenders may be prosecuted to the fullest extent of the law.

Contents

1. General Information 4
1.1 Testing Laboratory 4
1.2 Details of Applicant 4
1.3 Description of EUT 4
1.4 Test Environment 11
1.5 Operation description 11
1.6 FCC KDB INQUIRIES 19
1.7 The SAR Measurement System 21
1.8 System Components 23
1.9 SAR System Verification 25
1.10 Tissue Simulant Fluid for the Frequency Band 26
1.11 EVALUATION PROCEDURES 27
1.12 Test Standards and Limits 28
2. Summary of Results 31
3. Instruments List 39
4. Measurements 40
5. SAR System Performance Verification 84
6. DAE & Probe Calibration certificate 88
7. Uncertainty Analysis 100
8. Phantom Description 101
9. System Validation from Original equipment supplier 102

Unless otherwise stated the results shown in this test report refer only to the sample(s) tested and such sample(s) are retained for 90 days only.
除非另有說明，此報告結果僅對測試之樣品負責，同時此樣品僅保留90天。本報告未經本公司書面許可，不可部份複製。
This document is issued by the Company subject to its General Conditions of Service printed overleaf, available on request or accessible at www.sgs.com/terms_and_conditions.htm and, for electronic format documents, subject to Terms and Conditions for Electronic Documents at www.sgs.com/terms_e-document.htm. Attention is drawn to the limitation of liability, indemnification and jurisdiction issues defined therein. Any holder of this document is advised that information contained hereon reflects the Company's findings at the time of its intervention only and within the limits of Client's instructions, if any. The Company's sole responsibility is to its Client and this document does not exonerate parties to a transaction from exercising all their rights and obligations under the transaction documents. This document cannot be reproduced except in full, without prior written approval of the Company. Any unauthorized alteration, forgery or falsification of the content or appearance of this document is unlawful and offenders may be prosecuted to the fullest extent of the law.

1. General Information

1.1 Testing Laboratory

SGS Taiwan Ltd. Electronics & Communication Laboratory	
134, Wu Kung Road, Wuku industrial zone	
Taipei county, Taiwan, R.O.C.	
Telephone	+886-2-2299-3279
Fax	+886-2-2298-0488
Internet	http://www.tw.sgs.com

1.2 Details of Applicant

Name	DELL Inc.
Address	One Dell Way, Round Rock, Tx 78682
Contact Person	Anita Lee

1.3 Description of EUT

EUT Name	Mobile Internet Device
Model Number	M02M
Brand Name	DELL
Marketing Name	Looking Glass
FCC ID	E2KM02M001
IMEI code	354945040034355
Definition	Production unit
Mode of Operation	GSM\GPRS\EGPRS\WCDMA\HSDPA\HSUPA\ WLAN802.11 b/g/n(20M)

Unless otherwise stated the results shown in this test report refer only to the sample(s) tested and such sample(s) are retained for 90 days only.
除非另有說明，此報告結果僅對測試之樣品負責，同時此樣品僅保留90天。本報告未經本公司書面許可，不可部份複製。
This document is issued by the Company subject to its General Conditions of Service printed overleaf, available on request or accessible at www.sgs.com/terms_and_conditions.htm and, for electronic format documents, subject to Terms and Conditions for Electronic Documents at www.sgs.com/terms_e-document.htm. Attention is drawn to the limitation of liability, indemnification and jurisdiction issues defined therein. Any holder of this document is advised that information contained hereon reflects the Company's findings at the time of its intervention only and within the limits of Client's instructions, if any. The Company's sole responsibility is to its Client and this document does not exonerate parties to a transaction from exercising all their rights and obligations under the transaction documents. This document cannot be reproduced except in full, without prior written approval of the Company. Any unauthorized alteration, forgery or falsification of the content or appearance of this document is unlawful and offenders may be prosecuted to the fullest extent of the law.

Duty Cycle	GPRS(EGPRS)		WCDMA		WLAN802.11b/g /n (20M)	
	1/2 (4 multi-slot)		1		1	
TX Frequency range (MHz)	GPRS 850	GPRS 1900	WCDMA B2	WCDMA B4	WCDMA B5	WLAN802.11b/g /n (20M)
	824.2-848.8	1850.20-1909.80	1852.40-1907.60	1712.4-1752.4	826.40-846.60	2412-2462
Channel Number (ARFCN)	GPRS 850	GPRS 1900	WCDMA B2	WCDMA B4	WCDMA B5	WLAN802.11b/g /n (20M)
	128-251	512-810	9262-9538	1312-1513	4132-4233	1-11
Max. SAR Measured (1g)	**GRPS 850**					
	1.25W/kg At GPRS 850_ CH251_ Configuration 1 (Proximity sensor is NOT activated_ test distance is 10mm)					
	GRRS 1900					
	0.562W/kg At GPRS 1900_ CH512_ Configuration 1 (Proximity sensor is NOT activated_ test distance is 10mm)					
	WCDMA B2					
	0.795W/kg At WCDMA B2_ CH9262_ Configuration 1 (Proximity sensor is NOT activated_ test distance is 10mm)					
	WCDMA B4					
	0.705W/kg At WCDMA B4_ CH1412_ Configuration 1 (Proximity sensor is NOT activated_ test distance is 10mm)					
	WCDMA B5					
	1.2W/kg At WCDMA B5_ CH4183_ Configuration 1 (Proximity sensor is NOT activated_ test distance is 10mm)					
	WLAN802.11 b					
	0.329W/kg (At WLAN802.11b_ CH6_ Configuration 1) (Proximity sensor is NOT activated_ test distance is 5mm)					

Unless otherwise stated the results shown in this test report refer only to the sample(s) tested and such sample(s) are retained for 90 days only.
除非另有說明，此報告結果僅對測試之樣品負責，同時此樣品僅保留90天。本報告未經本公司書面許可，不可部份複製。
This document is issued by the Company subject to its General Conditions of Service printed overleaf, available on request or accessible at www.sgs.com/terms_and_conditions.htm and, for electronic format documents, subject to Terms and Conditions for Electronic Documents at www.sgs.com/terms_e-document.htm. Attention is drawn to the limitation of liability, indemnification and jurisdiction issues defined therein. Any holder of this document is advised that information contained hereon reflects the Company's findings at the time of its intervention only and within the limits of Client's instructions, if any. The Company's sole responsibility is to its Client and this document does not exonerate parties to a transaction from exercising all their rights and obligations under the transaction documents. This document cannot be reproduced except in full, without prior written approval of the Company. Any unauthorized alteration, forgery or falsification of the content or appearance of this document is unlawful and offenders may be prosecuted to the fullest extent of the law.

	WLAN802.11 g
	0.258W/kg At WLAN802.11g_ CH6_ Configuration 1 (Proximity sensor is NOT activated_ test distance is 5mm)
	WLAN802.11 n(20M)
	0.244W/kg At WLAN802.11n(20M)_ CH6_ Configuration 1 (Proximity sensor is NOT activated_ test distance is 5mm)

#. Power Reduction Design Specification

Mode	Power Reduction (1DN 4UP)	Power Reduction (1DN 3UP)	Power Reduction (1DN 2UP)	Power Reduction (1DN 1UP)
850 GPRS/EDGE	-7.4 dB	-9.8 dB	-10.5 dB	-12.5 dB
1900 GPRS/EDGE	-7.0 dB	-8.4 dB	-10.8 dB	-10.6 dB

Mode	Power Reduction
850 UMTS	-7.4 dB
1900 UMTS	-7.4 dB
1700 UMTS	-7.4 dB
WIFI	0 dB

Unless otherwise stated the results shown in this test report refer only to the sample(s) tested and such sample(s) are retained for 90 days only.
除非另有說明，此報告結果僅對測試之樣品負責，同時此樣品僅保留90天。本報告未經本公司書面許可，不可部份複製。
This document is issued by the Company subject to its General Conditions of Service printed overleaf, available on request or accessible at www.sgs.com/terms_and_conditions.htm and, for electronic format documents, subject to Terms and Conditions for Electronic Documents at www.sgs.com/terms_e-document.htm. Attention is drawn to the limitation of liability, indemnification and jurisdiction issues defined therein. Any holder of this document is advised that information contained hereon reflects the Company's findings at the time of its intervention only and within the limits of Client's instructions, if any. The Company's sole responsibility is to its Client and this document does not exonerate parties to a transaction from exercising all their rights and obligations under the transaction documents. This document cannot be reproduced except in full, without prior written approval of the Company. Any unauthorized alteration, forgery or falsification of the content or appearance of this document is unlawful and offenders may be prosecuted to the fullest extent of the law.

Conducted transmit power for all bands, modes:

GPRS/EGPRS mode:(ALL burst-average)

EUT Mode	Frequency (MHz)	CH	Avg. Power (1DN 1UP) (dBm)	Avg. Power (1DN 2UP) (dBm)	Avg. Power (1DN 3UP) (dbm)	Avg. Power (1DN 4UP) (dBm)
GPRS 850	824.2	128	31.43	29.49	28.82	26.35
	836.6	190	31.47	29.51	28.85	26.38
	848.8	251	31.51	29.53	28.87	26.42

EUT Mode	Frequency (MHz)	CH	Avg. Power (1DN 1UP) (dBm)	Avg. Power (1DN 2UP) (dBm)	Avg. Power (1DN 3UP) (dbm)	Avg. Power (1DN 4UP) (dBm)
GPRS 1900	1850.2	512	28.74	27.22	26.48	25.10
	1880.0	661	28.69	27.17	26.41	25.08
	1909.8	810	28.41	28.88	26.23	24.80

EUT Mode	Frequency (MHz)	CH	Avg. Power (1DN 1UP) (dBm)	Avg. Power (1DN 2UP) (dBm)	Avg. Power (1DN 3UP) (dbm)	Avg. Power (1DN 4UP) (dBm)
EDGE 850	824.2	128	26.09	24.01	23.65	21.97
	836.6	190	26.11	24.05	23.66	22.02
	848.8	251	26.13	24.06	23.69	21.98

EUT Mode	Frequency (MHz)	CH	Avg. Power (1DN 1UP) (dBm)	Avg. Power (1DN 2UP) (dBm)	Avg. Power (1DN 3UP) (dbm)	Avg. Power (1DN 4UP) (dBm)
EDGE 1900	1850.2	512	25.31	23.25	22.68	21.19
	1880.0	661	25.26	23.22	22.65	21.14
	1909.8	810	24.95	22.93	22.31	20.87

GPRS Multislot Class:12(4 Tx max slots uplink)

EDGE Multislot Class:12(4 Tx max slots uplink)

Unless otherwise stated the results shown in this test report refer only to the sample(s) tested and such sample(s) are retained for 90 days only.
除非另有說明，此報告結果僅對測試之樣品負責，同時此樣品僅保留90天。本報告未經本公司書面許可，不可部份複製。
This document is issued by the Company subject to its General Conditions of Service printed overleaf, available on request or accessible at www.sgs.com/terms_and_conditions.htm and, for electronic format documents, subject to Terms and Conditions for Electronic Documents at www.sgs.com/terms_e-document.htm. Attention is drawn to the limitation of liability, indemnification and jurisdiction issues defined therein. Any holder of this document is advised that information contained hereon reflects the Company's findings at the time of its intervention only and within the limits of Client's instructions, if any. The Company's sole responsibility is to its Client and this document does not exonerate parties to a transaction from exercising all their rights and obligations under the transaction documents. This document cannot be reproduced except in full, without prior written approval of the Company. Any unauthorized alteration, forgery or falsification of the content or appearance of this document is unlawful and offenders may be prosecuted to the fullest extent of the law.

WCDMA / HSDPA / HSUPA mode :

Freq. Band	Frequency	CH	Avg. Power	HSDPA mode				HSUPA mode				
	(MHz)		(dBm)	SUB-1	SUB-2	SUB-3	SUB-4	SUB-1	SUB-2	SUB-3	SUB-4	SUB-5
WCDMA Band II	1852.4	9262	22.85	23.02	22.7	22.54	22.61	22.77	20.82	21.83	20.95	22.66
	1880.0	9400	22.79	22.68	22.7	22.23	22.24	22.77	20.84	21.79	20.89	22.63
	1907.6	9538	22.74	22.6	22.6	22.07	22.19	22.68	20.72	21.76	20.76	22.59
Freq. Band	Frequency	CH	Avg. Power	HSDPA mode				HSUPA mode				
	(MHz)		(dBm)	SUB-1	SUB-2	SUB-3	SUB-4	SUB-1	SUB-2	SUB-3	SUB-4	SUB-5
WCDMA Band IV	1712.4	1312	22.93	22.64	22.8	22.16	22.23	22.85	20.9	21.91	21.03	22.74
	1732.4	1412	23.13	23.23	23.0	22.78	22.79	23.11	21.18	22.13	21.23	22.97
	1752.6	1513	22.85	22.69	22.7	22.16	22.28	22.79	20.83	21.87	20.87	22.7
Freq. Band	Frequency	CH	Avg. Power	HSDPA mode				HSUPA mode				
	(MHz)		(dBm)	SUB-1	SUB-2	SUB-3	SUB-4	SUB-1	SUB-2	SUB-3	SUB-4	SUB-5
WCDMA Band V	826.4	4132	23.00	22.79	22.93	22.33	22.38	22.96	21.02	22	21.07	22.82
	836.6	4183	22.98	22.84	22.87	22.36	22.4	22.91	20.99	21.97	21.05	22.74
	846.6	4233	22.92	23.04	22.79	22.55	22.61	22.84	20.88	21.92	20.96	22.73

EUT Mode	Frequency (MHz)	CH	Average Power (dBm)
WLAN802.11b	2412	1	14.62
	2437	6	14.69
	2462	11	14.35

EUT Mode	Frequency (MHz)	CH	Average Power (dBm)
WLAN802.11n (20M)	2412	1	15.02
	2437	6	15.25
	2462	11	14.81

EUT Mode	Frequency (MHz)	CH	Average Power (dBm)
WLAN802.11g	2412	1	14.62
	2437	6	14.98
	2462	11	14.23

Unless otherwise stated the results shown in this test report refer only to the sample(s) tested and such sample(s) are retained for 90 days only.
除非另有說明，此報告結果僅對測試之樣品負責，同時此樣品僅保留90天。本報告未經本公司書面許可，不可部份複製。
This document is issued by the Company subject to its General Conditions of Service printed overleaf, available on request or accessible at www.sgs.com/terms_and_conditions.htm and, for electronic format documents, subject to Terms and Conditions for Electronic Documents at www.sgs.com/terms_e-document.htm. Attention is drawn to the limitation of liability, indemnification and jurisdiction issues defined therein. Any holder of this document is advised that information contained hereon reflects the Company's findings at the time of its intervention only and within the limits of Client's instructions, if any. The Company's sole responsibility is to its Client and this document does not exonerate parties to a transaction from exercising all their rights and obligations under the transaction documents. This document cannot be reproduced except in full, without prior written approval of the Company. Any unauthorized alteration, forgery or falsification of the content or appearance of this document is unlawful and offenders may be prosecuted to the fullest extent of the law.

#.Proximity sensor activated, the conducted power of WWAN module:

GPRS/EGPRS mode: (ALL burst-average)

EUT Mode	Frequency (MHz)	CH	Avg. Power (1DN 1UP) (dBm)	Avg. Power (1DN 2UP) (dBm)	Avg. Power (1DN 3UP) (dBm)	Avg. Power (1DN 4UP) (dBm)
GPRS 850	824.2	128	19.60	19.56	19.51	19.43
	836.6	190	19.63	19.58	19.53	19.46
	848.8	251	19.65	19.61	19.54	19.48

EUT Mode	Frequency (MHz)	CH	Avg. Power (1DN 1UP) (dBm)	Avg. Power (1DN 2UP) (dBm)	Avg. Power (1DN 3UP) (dBm)	Avg. Power (1DN 4UP) (dBm)
GPRS 1900	1850.2	512	18.29	17.77	17.75	17.69
	1880.0	661	18.23	17.70	17.69	17.64
	1909.8	810	18.13	17.62	17.60	17.57

EUT Mode	Frequency (MHz)	CH	Avg. Power (1DN 1UP) (dBm)	Avg. Power (1DN 2UP) (dBm)	Avg. Power (1DN 3UP) (dBm)	Avg. Power (1DN 4UP) (dBm)
EDGE 850	824.2	128	19.02	19.01	18.97	18.92
	836.6	190	19.06	19.04	18.98	18.95
	848.8	251	19.09	19.07	19.02	18.92

EUT Mode	Frequency (MHz)	CH	Avg. Power (1DN 1UP) (dBm)	Avg. Power (1DN 2UP) (dBm)	Avg. Power (1DN 3UP) (dBm)	Avg. Power (1DN 4UP) (dBm)
EDGE 1900	1850.2	512	17.85	17.87	17.85	17.87
	1880.0	661	17.81	17.81	17.83	17.78
	1909.8	810	17.73	17.74	17.71	17.71

GPRS Multislot Class:12(4 Tx max slots uplink)

EDGE Multislot Class:12(4 Tx max slots uplink)

Unless otherwise stated the results shown in this test report refer only to the sample(s) tested and such sample(s) are retained for 90 days only.
除非另有說明，此報告結果僅對測試之樣品負責，同時此樣品僅保留90天。本報告未經本公司書面許可，不可部份複製。
This document is issued by the Company subject to its General Conditions of Service printed overleaf, available on request or accessible at www.sgs.com/terms_and_conditions.htm and, for electronic format documents, subject to Terms and Conditions for Electronic Documents at www.sgs.com/terms_e-document.htm. Attention is drawn to the limitation of liability, indemnification and jurisdiction issues defined therein. Any holder of this document is advised that information contained hereon reflects the Company's findings at the time of its intervention only and within the limits of Client's instructions, if any. The Company's sole responsibility is to its Client and this document does not exonerate parties to a transaction from exercising all their rights and obligations under the transaction documents. This document cannot be reproduced except in full, without prior written approval of the Company. Any unauthorized alteration, forgery or falsification of the content or appearance of this document is unlawful and offenders may be prosecuted to the fullest extent of the law.

WCDMA / HSDPA / HSUPA mode :

Freq. Band	Frequency	CH	R99 Avg. Power	HSDPA mode Avg. Power				HSUPA mode Avg. Power				
	(MHz)		(dBm)	SUB-1	SUB-2	SUB-3	SUB-4	SUB-1	SUB-2	SUB-3	SUB-4	SUB-5
WCDMA Band II	1852.4	9262	15.41	15.58	15.29	15.1	15.17	15.33	13.38	14.39	13.51	15.22
	1880.0	9400	15.70	15.59	15.56	15.14	15.15	15.68	13.75	14.7	13.8	15.54
	1907.6	9538	14.51	14.37	14.36	13.84	13.96	14.45	12.49	13.53	12.53	14.36
Freq. Band	Frequency	CH	Avg. Power	HSDPA mode				HSUPA mode				
	(MHz)		(dBm)	SUB-1	SUB-2	SUB-3	SUB-4	SUB-1	SUB-2	SUB-3	SUB-4	SUB-5
WCDMA Band IV	1712.4	1312	15.44	15.15	15.32	14.67	14.74	15.36	13.41	14.42	13.54	15.25
	1732.4	1412	16.03	16.13	15.89	15.68	15.69	16.01	14.08	15.03	14.13	15.87
	1752.6	1513	15.67	15.51	15.52	14.98	15.10	15.61	13.65	14.69	13.69	15.52
Freq. Band	Frequency	CH	Avg. Power	HSDPA mode				HSUPA mode				
	(MHz)		(dBm)	SUB-1	SUB-2	SUB-3	SUB-4	SUB-1	SUB-2	SUB-3	SUB-4	SUB-5
WCDMA Band V	826.4	4132	16.37	16.16	16.3	15.7	15.75	16.33	14.39	15.37	14.44	16.19
	836.6	4183	15.94	15.8	15.83	15.32	15.36	15.87	13.95	14.93	14.01	15.7
	846.6	4233	15.47	15.59	15.34	15.1	15.16	15.39	13.43	14.47	13.51	15.28

Unless otherwise stated the results shown in this test report refer only to the sample(s) tested and such sample(s) are retained for 90 days only.
除非另有說明，此報告結果僅對測試之樣品負責，同時此樣品僅保留90天。本報告未經本公司書面許可，不可部份複製。
This document is issued by the Company subject to its General Conditions of Service printed overleaf, available on request or accessible at www.sgs.com/terms_and_conditions.htm and, for electronic format documents, subject to Terms and Conditions for Electronic Documents at www.sgs.com/terms_e-document.htm. Attention is drawn to the limitation of liability, indemnification and jurisdiction issues defined therein. Any holder of this document is advised that information contained hereon reflects the Company's findings at the time of its intervention only and within the limits of Client's instructions, if any. The Company's sole responsibility is to its Client and this document does not exonerate parties to a transaction from exercising all their rights and obligations under the transaction documents. This document cannot be reproduced except in full, without prior written approval of the Company. Any unauthorized alteration, forgery or falsification of the content or appearance of this document is unlawful and offenders may be prosecuted to the fullest extent of the law.

1.4 Test Environment

Ambient Temperature: 22±2° C
Tissue Simulating Liquid: 22±2° C

1.5 Operation description

1.Working theory of Touch/proximity sensor

When users not approach/touch the sensor pad, the impedance of the sensor input Zin should be kept less than the impedance of the reference Zref, as shown in Figure 4. If users approach/touch sense pad, as shown in Figure 5, Zin is increased by Zsense. When Zsense by approaching/touching becomes greater than the difference between Zin and Zref in the not approached/touched state, i.e., if Zin in approached/touched state becomes greater than Zref by a value higher than 0.1pF (value setting for suitable detect distance), the sense IC generates the acknowledged output signal indicating it senses the approach/touch. Summary, it detects impedance difference between reference and sensor input.

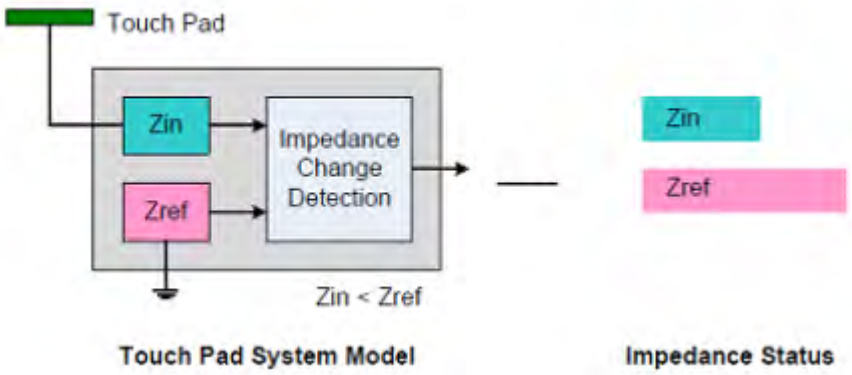

Pad is not approached / touched

Unless otherwise stated the results shown in this test report refer only to the sample(s) tested and such sample(s) are retained for 90 days only.
除非另有說明，此報告結果僅對測試之樣品負責，同時此樣品僅保留90天。本報告未經本公司書面許可，不可部份複製。
This document is issued by the Company subject to its General Conditions of Service printed overleaf, available on request or accessible at www.sgs.com/terms_and_conditions.htm and, for electronic format documents, subject to Terms and Conditions for Electronic Documents at www.sgs.com/terms_e-document.htm. Attention is drawn to the limitation of liability, indemnification and jurisdiction issues defined therein. Any holder of this document is advised that information contained hereon reflects the Company's findings at the time of its intervention only and within the limits of Client's instructions, if any. The Company's sole responsibility is to its Client and this document does not exonerate parties to a transaction from exercising all their rights and obligations under the transaction documents. This document cannot be reproduced except in full, without prior written approval of the Company. Any unauthorized alteration, forgery or falsification of the content or appearance of this document is unlawful and offenders may be prosecuted to the fullest extent of the law.

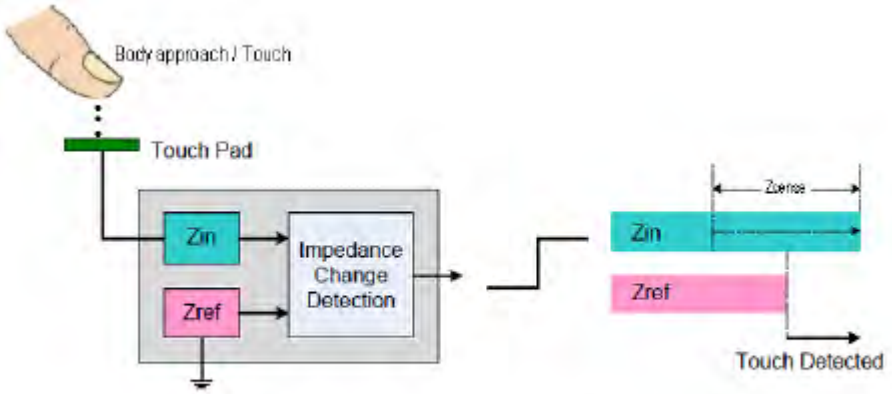

Touch Pad System Model Impedance Status

Pad is approached / touched.

Additional explanation for proximity sensor

- ATA5101 memorize the C_o(Offset Capacitance) value when finger is not presented in the chip.
- C_f (Finger Capacitance) between the touch sensor input(pad) and finger is made when finger is getting close to the touch sensor input.(pad)
- ATA5101 recognize the proximity if C_f is over 60fF.

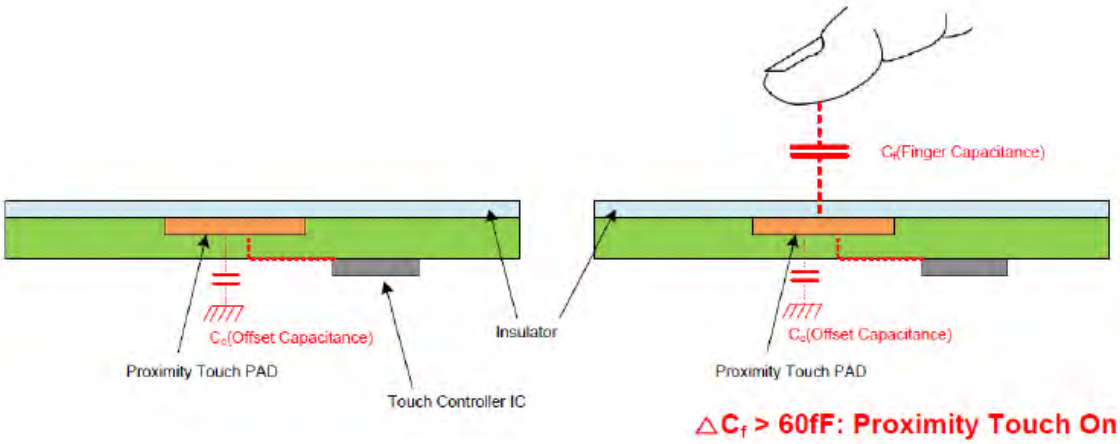

Unless otherwise stated the results shown in this test report refer only to the sample(s) tested and such sample(s) are retained for 90 days only.
除非另有說明，此報告結果僅對測試之樣品負責，同時此樣品僅保留90天。本報告未經本公司書面許可，不可部份複製。
This document is issued by the Company subject to its General Conditions of Service printed overleaf, available on request or accessible at www.sgs.com/terms_and_conditions.htm and, for electronic format documents, subject to Terms and Conditions for Electronic Documents at www.sgs.com/terms_e-document.htm. Attention is drawn to the limitation of liability, indemnification and jurisdiction issues defined therein. Any holder of this document is advised that information contained hereon reflects the Company's findings at the time of its intervention only and within the limits of Client's instructions, if any. The Company's sole responsibility is to its Client and this document does not exonerate parties to a transaction from exercising all their rights and obligations under the transaction documents. This document cannot be reproduced except in full, without prior written approval of the Company. Any unauthorized alteration, forgery or falsification of the content or appearance of this document is unlawful and offenders may be prosecuted to the fullest extent of the law.

✓ The sensitivity of the ATA5101 will be decreased if GND pattern or conductor material is located close to the sensor input pad and line because an electrical field generated by GND patterns will attenuate the strength of capacitance generated by the finger touch.

✓ Capacitance between the sensor input pads and finger is constant as C_f But if GND pattern is located close to the sensor input pads, the capacitance will be decreased to 1/3 C_f

✓ This will decrease the sensitivity of the sensor input as shown in Figure 2. Also that means ATA5101 can recognize the proximity when the distance between finger and the sensor input pad should be decreased to 1/3 as shown in Figure3.

Figure 1. Case of No-GND pattern(@d distance)

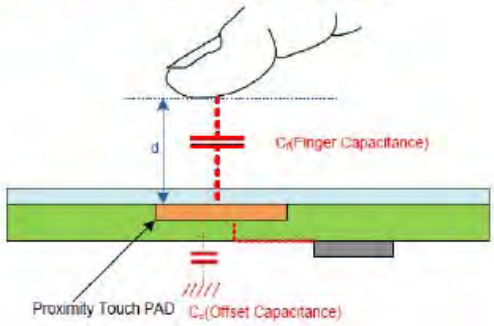

Figure 2. Case of GND pattern(@d distance)

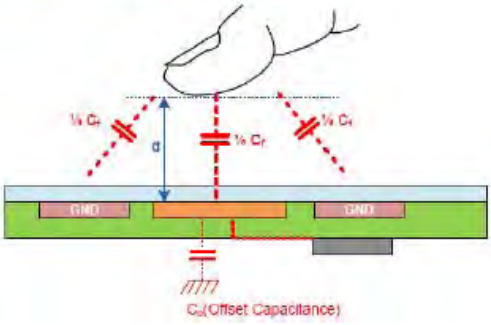

Figure 3. Case of GND pattern(@1/3d distance)

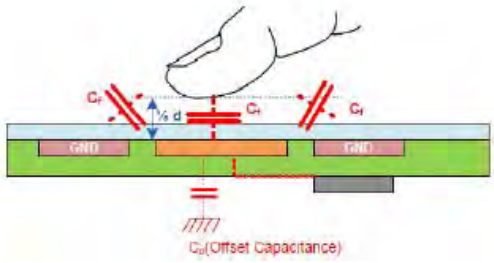

There is only one sensor for the back of the device (no sensors for the edges). Please see below for sensor activation/de-activation information:

Table 1

Body Sensor Distance from Back of Mini-Tablet

Distance in mm	9	10	11	12	13	14
Condition of Sensor in the back of the device	on	on	on	off	off	off

To test SAR with power back-off OFF at 10 mm, the device sensor detection mechanism would normally be active and therefore had to be disabled via manufacturer test software. The device was placed in maximum power transmit mode with a base station simulator. The device was then positioned under the tissue equivalent liquid-filled flat phantom at a distance of 10 mm with the sensor deactivated (via software) and tested at maximum power.

Unless otherwise stated the results shown in this test report refer only to the sample(s) tested and such sample(s) are retained for 90 days only.
除非另有說明，此報告結果僅對測試之樣品負責，同時此樣品僅保留90天。本報告未經本公司書面許可，不可部份複製。
This document is issued by the Company subject to its General Conditions of Service printed overleaf, available on request or accessible at www.sgs.com/terms_and_conditions.htm and, for electronic format documents, subject to Terms and Conditions for Electronic Documents at www.sgs.com/terms_e-document.htm. Attention is drawn to the limitation of liability, indemnification and jurisdiction issues defined therein. Any holder of this document is advised that information contained hereon reflects the Company's findings at the time of its intervention only and within the limits of Client's instructions, if any. The Company's sole responsibility is to its Client and this document does not exonerate parties to a transaction from exercising all their rights and obligations under the transaction documents. This document cannot be reproduced except in full, without prior written approval of the Company. Any unauthorized alteration, forgery or falsification of the content or appearance of this document is unlawful and offenders may be prosecuted to the fullest extent of the law.

2. Proximity Sensor Operational Theory for Power Back off

There is only one sensor (proximity) built in this EUT. Due to SAR requirement for protection of the human body, this proximity sensor pad be designed close to WWAN antenna. When users are not close to sense area, the output power of WWAN module follows the regulation of 3GPP/ETSI. When users approach the EUT within 11 mm, sensor IC will trigger power back off to meet SAR requirement.

Please note that even without users touching the tablet, proximity sensor is activated and power back off activated while users approach the sensor pad. Of course, it works if users touch the sensor pad as well. We use only one sensor IC, sensor pads are for sensing area coverage.

Per discussion with the FCC, SAR testing at 10 mm (For the wireless modes that use the proximity sensor, also test SAR at the maximum average conducted power (non-reduced level) with all applicable sides and edges positioned at 1 mm less than the closest distance the proximity sensor may deactivate) was performed. Manual tool for sensor forced activated and in-activated has been implemented for this test. This tool is only for manufacturer internal use, the general public will not have this tool.

This plot shows the output power(dBm) and the distance between sensor pad and human body.

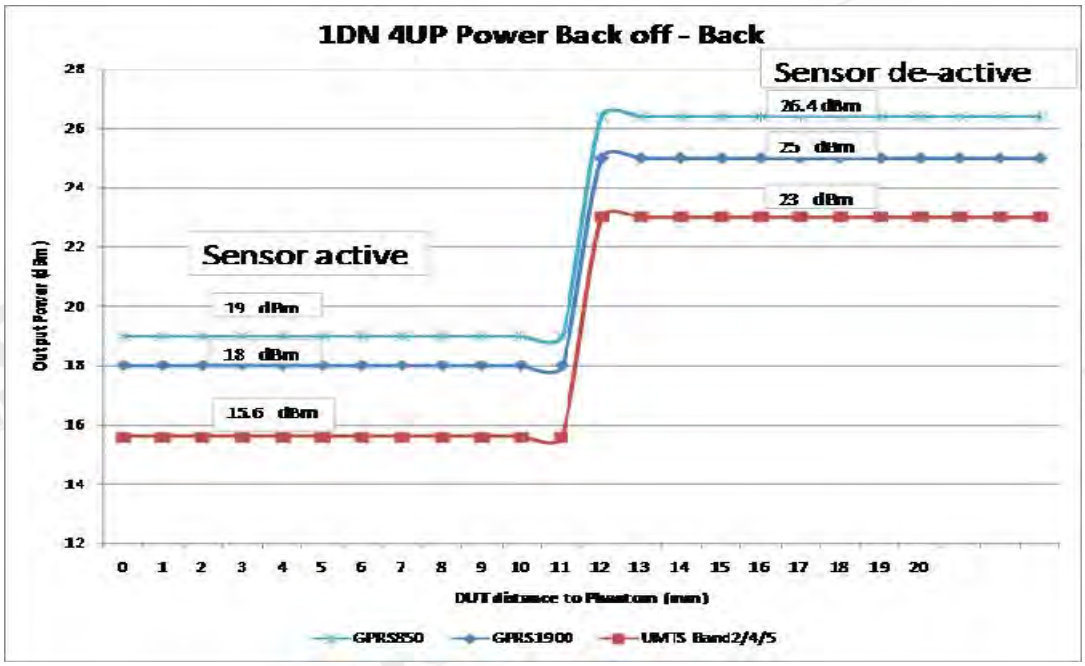

Distance vs. output power plot(1DN 4UP)

Unless otherwise stated the results shown in this test report refer only to the sample(s) tested and such sample(s) are retained for 90 days only.
除非另有說明，此報告結果僅對測試之樣品負責，同時此樣品僅保留90天。本報告未經本公司書面許可，不可部份複製。
This document is issued by the Company subject to its General Conditions of Service printed overleaf, available on request or accessible at www.sgs.com/terms_and_conditions.htm and, for electronic format documents, subject to Terms and Conditions for Electronic Documents at www.sgs.com/terms_e-document.htm. Attention is drawn to the limitation of liability, indemnification and jurisdiction issues defined therein. Any holder of this document is advised that information contained hereon reflects the Company's findings at the time of its intervention only and within the limits of Client's instructions, if any. The Company's sole responsibility is to its Client and this document does not exonerate parties to a transaction from exercising all their rights and obligations under the transaction documents. This document cannot be reproduced except in full, without prior written approval of the Company. Any unauthorized alteration, forgery or falsification of the content or appearance of this document is unlawful and offenders may be prosecuted to the fullest extent of the law.

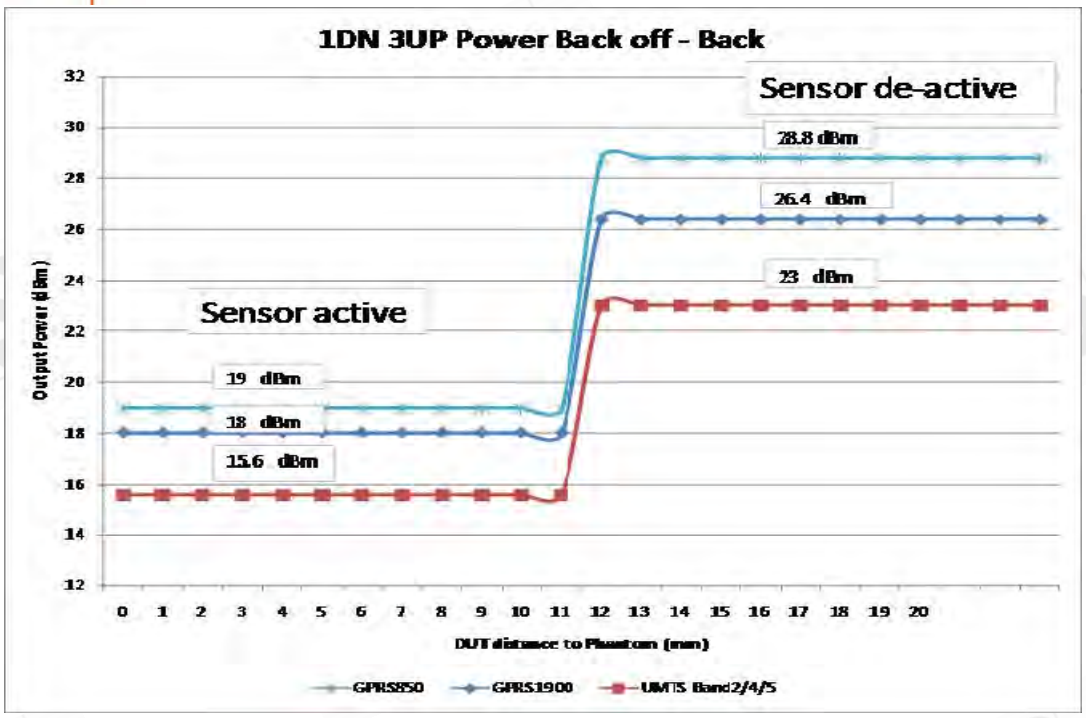

Distance vs. output power plot(1DN 3UP)

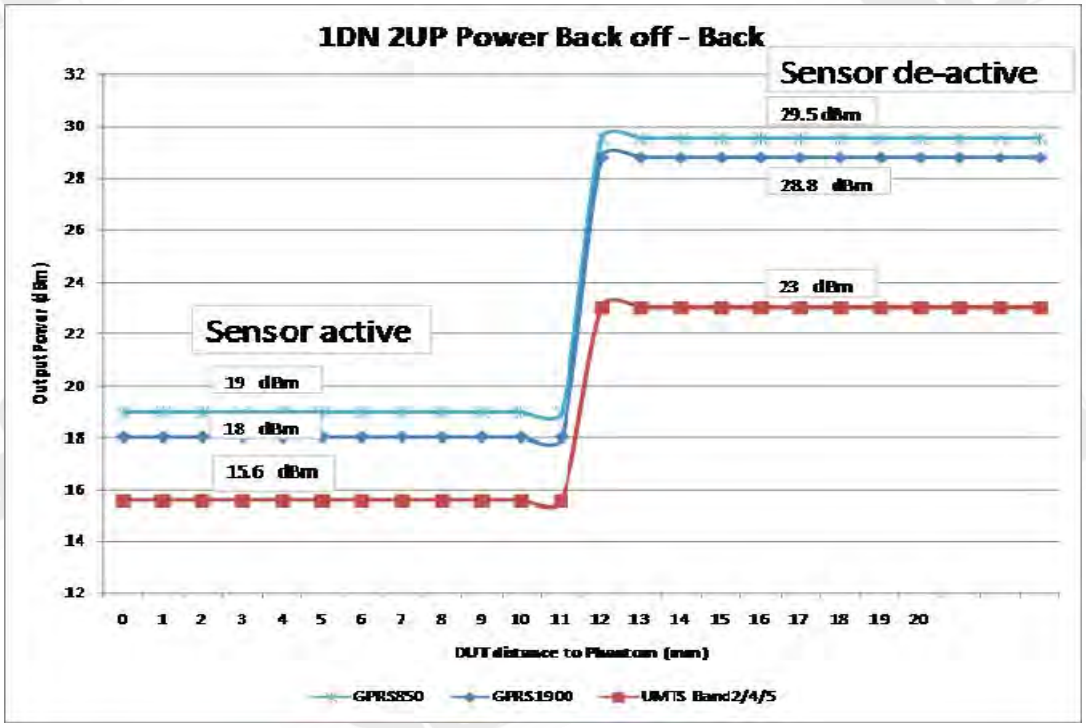

Distance vs. output power plot (1DN 2UP)

Unless otherwise stated the results shown in this test report refer only to the sample(s) tested and such sample(s) are retained for 90 days only.
除非另有說明，此報告結果僅對測試之樣品負責，同時此樣品僅保留90天。本報告未經本公司書面許可，不可部份複製。
This document is issued by the Company subject to its General Conditions of Service printed overleaf, available on request or accessible at www.sgs.com/terms_and_conditions.htm and, for electronic format documents, subject to Terms and Conditions for Electronic Documents at www.sgs.com/terms_e-document.htm. Attention is drawn to the limitation of liability, indemnification and jurisdiction issues defined therein. Any holder of this document is advised that information contained hereon reflects the Company's findings at the time of its intervention only and within the limits of Client's instructions, if any. The Company's sole responsibility is to its Client and this document does not exonerate parties to a transaction from exercising all their rights and obligations under the transaction documents. This document cannot be reproduced except in full, without prior written approval of the Company. Any unauthorized alteration, forgery or falsification of the content or appearance of this document is unlawful and offenders may be prosecuted to the fullest extent of the law.

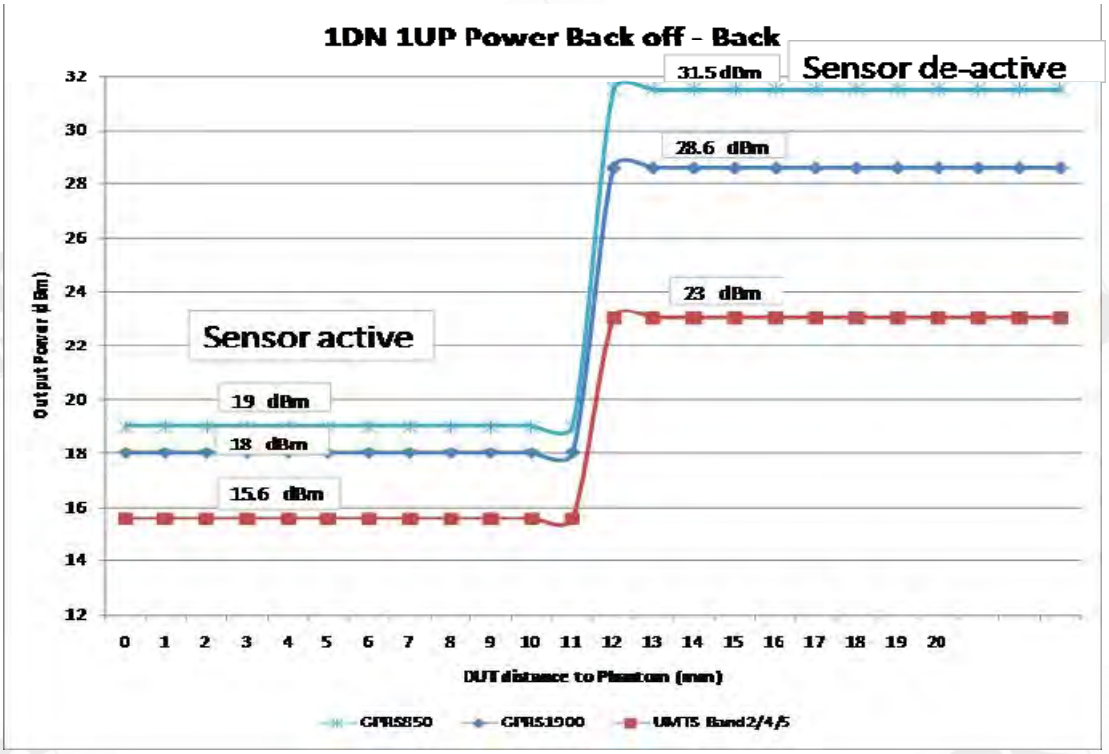

Distance vs. output power plot(1DN 1UP)

Unless otherwise stated the results shown in this test report refer only to the sample(s) tested and such sample(s) are retained for 90 days only.
除非另有說明，此報告結果僅對測試之樣品負責，同時此樣品僅保留90天。本報告未經本公司書面許可，不可部份複製。
This document is issued by the Company subject to its General Conditions of Service printed overleaf, available on request or accessible at www.sgs.com/terms_and_conditions.htm and, for electronic format documents, subject to Terms and Conditions for Electronic Documents at www.sgs.com/terms_e-document.htm. Attention is drawn to the limitation of liability, indemnification and jurisdiction issues defined therein. Any holder of this document is advised that information contained hereon reflects the Company's findings at the time of its intervention only and within the limits of Client's instructions, if any. The Company's sole responsibility is to its Client and this document does not exonerate parties to a transaction from exercising all their rights and obligations under the transaction documents. This document cannot be reproduced except in full, without prior written approval of the Company. Any unauthorized alteration, forgery or falsification of the content or appearance of this document is unlawful and offenders may be prosecuted to the fullest extent of the law.

3. WWAN: The EUT is controlled by using a Radio Communication Tester (R&S CMU200), and the communication between the EUT and the tester is established by air link. Measurements are performed respectively on the lowest, middle and highest channels of the operating band(s). The EUT is set to maximum power level during all tests, and at the beginning of each test the battery is fully charged.

4. WLAN: Use chipset specific software to control the EUT, and makes it transmit in maximum power. Measurements are performed respectively on the lowest, middle and highest channels of the operating band(s). **The proximity sensor does not affect the power of WLAN.**

5. The test configuration tested at the low, middle and high frequency channels, and then test of set in highest power. Finally, we will test it by dividing into 4 configurations:

Configuration 1: Lap-held mode. (Fig.3)
Configuration 2: Secondary portrait mode. (Fig.5)
Configuration 3: Secondary landscape mode. (Fig.6)
Configuration 4: Primary Landscape mode. (Fig.7)
Configuration 5: Primary portrait mode. (SW Disabled, so SAR test is not required)

6. The distance between device edge to flat phantom(human body) is set 5mm for all configurations.

7. If the 1-g SAR for the highest output channel is less than 0.8 W/kg, where the transmission band corresponding to all channels is ≤ 100 MHz, testing for the other channels is not required.

8. When the maximum transmitter and antenna output power are ≦ 60/f(GHz) (mW) SAR evaluation is not required for FCC or TCB approval. (BT power=3.94dBm)

9. Per KDB941225 FCC 3G procedures, HSDPA and HSUPA have been omitted since the maximum transmit power results are NOT 1/4dB larger than the WCDMA R99 test result.

10. Per KDB941225 D03 procedures, EGPRS/EDGE have been omitted since the maximum transmit power results are less than the GPRS test results.

11. Bluetooth and WLAN can not be transmitted simultaneously, according to client's operational description.

Unless otherwise stated the results shown in this test report refer only to the sample(s) tested and such sample(s) are retained for 90 days only.
除非另有說明，此報告結果僅對測試之樣品負責，同時此樣品僅保留90天。本報告未經本公司書面許可，不可部份複製。
This document is issued by the Company subject to its General Conditions of Service printed overleaf, available on request or accessible at www.sgs.com/terms_and_conditions.htm and, for electronic format documents, subject to Terms and Conditions for Electronic Documents at www.sgs.com/terms_e-document.htm. Attention is drawn to the limitation of liability, indemnification and jurisdiction issues defined therein. Any holder of this document is advised that information contained hereon reflects the Company's findings at the time of its intervention only and within the limits of Client's instructions, if any. The Company's sole responsibility is to its Client and this document does not exonerate parties to a transaction from exercising all their rights and obligations under the transaction documents. This document cannot be reproduced except in full, without prior written approval of the Company. Any unauthorized alteration, forgery or falsification of the content or appearance of this document is unlawful and offenders may be prosecuted to the fullest extent of the law.

12. Normally, proximity sensor is activated in 11mm, based on the experiment results listed in the table below. In Lap-held mode, we tested two configurations, one is proximity sensor activated with 5mm distances between EUT and flat phantom, see (Fin.3),the other is proximity sensor non-activated with 10mm distances between EUT and flat phantom, see (Fig.4).

13. The highest 1-g SAR for WLAN is 0.329 W/kg and the highest 1-g SAR for WWAN is 1.25W/kg. The sum of 1-g for simultaneous transmitting WLAN and WWAN antenna pair is 0.329+1.25 = 1.579 W/kg < 1.6 W/kg. Simultaneous SAR evaluation is not required.

14. Distance between WWAN and WALN antenna is 160mm

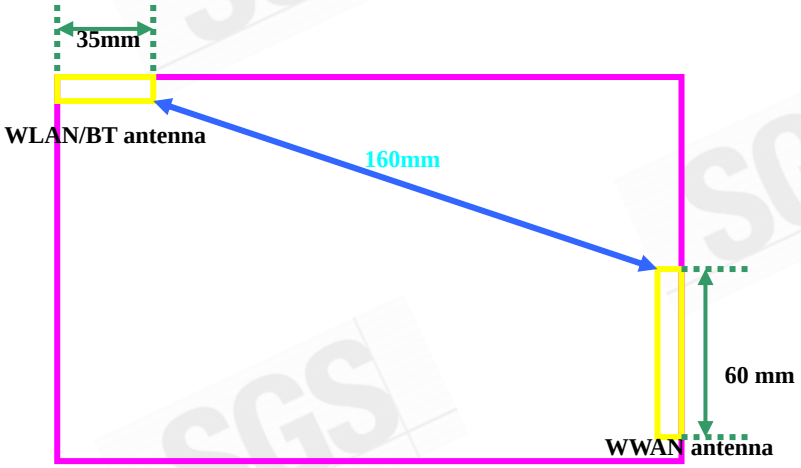

Antenna distance from
Back view of EUT

Unless otherwise stated the results shown in this test report refer only to the sample(s) tested and such sample(s) are retained for 90 days only.
除非另有說明，此報告結果僅對測試之樣品負責，同時此樣品僅保留90天。本報告未經本公司書面許可，不可部份複製。
This document is issued by the Company subject to its General Conditions of Service printed overleaf, available on request or accessible at www.sgs.com/terms_and_conditions.htm and, for electronic format documents, subject to Terms and Conditions for Electronic Documents at www.sgs.com/terms_e-document.htm. Attention is drawn to the limitation of liability, indemnification and jurisdiction issues defined therein. Any holder of this document is advised that information contained hereon reflects the Company's findings at the time of its intervention only and within the limits of Client's instructions, if any. The Company's sole responsibility is to its Client and this document does not exonerate parties to a transaction from exercising all their rights and obligations under the transaction documents. This document cannot be reproduced except in full, without prior written approval of the Company. Any unauthorized alteration, forgery or falsification of the content or appearance of this document is unlawful and offenders may be prosecuted to the fullest extent of the law.

1.6 FCC KDB INQUIRIES (tracking number: 144590)

1. Peak output power (Avg.) is indicated for the 802.11 modes, it is unclear whether these are peak or average maximum output power measurement results.
   Ans. These are average powers in test report page 8.
2. Identify what channel bandwidths are considered for the 802.11n results.
   Ans. WLAN802.11n only support 20M for channel bandwidth, it is also determined in customer's operation description.
3. Identify if Wi-Fi/BT means a combined transmitter/module where only one of the modes can transmit at a time.
   Ans. Bluetooth and WLAN can not transmit simultaneously, it is also shown in customer's operation description.
4. In the final SAR report, include the actual power measurement data and also detailed setup diagrams and descriptions about how the device is positioned against a flat phantom filled with the required tissue-equivalent liquid (for each frequency band) to determine the range of activation and deactivation distances for the proximity sensor. These tests should be done for the bottom surface and also for the three edges adjacent to the WWAN antenna. The preliminary results using pork meat is unacceptable. You do not need to repeat each test 100 times; just sufficient times to show consistency with respect to the specifications of the proximity sensor implementation for this device.
   Ans. The distance between device edge to flat phantom(human body) is set 5mm for all configurations. Normally, proximity sensor is activated in 11mm. In Lap-held mode, we tested two configurations, one is proximity sensor activated with 5mm distances between EUT and flat phantom, see (Fin.3), the other is proximity sensor non-activated with 10mm distances between EUT and flat phantom, see (Fig.4).
5. For SAR testing, when the proximity sensor is active (with power reduction), apply the 5 mm UMPC mini-tablet procedures for the required edges and surfaces for testing with the reduced maximum average conducted output power to the applicable wireless modes. Apply full maximum power for modes not applicable to the proximity sensor (5 mm). Please include clear product specifications regarding the exact

Unless otherwise stated the results shown in this test report refer only to the sample(s) tested and such sample(s) are retained for 90 days only.
除非另有說明，此報告結果僅對測試之樣品負責，同時此樣品僅保留90天。本報告未經本公司書面許可，不可部份複製。
This document is issued by the Company subject to its General Conditions of Service printed overleaf, available on request or accessible at www.sgs.com/terms_and_conditions.htm and, for electronic format documents, subject to Terms and Conditions for Electronic Documents at www.sgs.com/terms_e-document.htm. Attention is drawn to the limitation of liability, indemnification and jurisdiction issues defined therein. Any holder of this document is advised that information contained hereon reflects the Company's findings at the time of its intervention only and within the limits of Client's instructions, if any. The Company's sole responsibility is to its Client and this document does not exonerate parties to a transaction from exercising all their rights and obligations under the transaction documents. This document cannot be reproduced except in full, without prior written approval of the Company. Any unauthorized alteration, forgery or falsification of the content or appearance of this document is unlawful and offenders may be prosecuted to the fullest extent of the law.

amount of power reduction in each wireless and operating modes; these will be compared against measured results.

Ans. Please see the page 7-10 for full maximum power.

6. For the wireless modes that use the proximity sensor, also test SAR at the maximum average conducted power (non-reduced level) with all applicable sides and edges positioned at 1 mm less than the closest distance the proximity sensor may deactivate (therefore, full maximum power) according to results in item #4 above. This will require the device to be configured in manual mode for SAR testing. Detailed explanations must be included in the SAR report for the test setup and how the test signal is established through the communication test set in conjunction with the manual mode setting etc.

   Ans. Please refer to item 12 of Section 1.5 of this report.

7. Please also identify all simultaneous transmission conditions applicable to this device and address accordingly with respect to the simultaneous transmission SAR exclusion procedures for handsets in KDB 648474 or perform SAR measurements if necessary.

   Ans. The highest 1-g SAR for WLAN is 0.329 W/kg and the highest 1-g SAR for WWAN is 1.25W/kg. The sum of 1-g for simultaneous transmitting WLAN and WWAN antenna pair is 0.329+1.25 = 1.579 W/kg < 1.6 W/kg. Simultaneous SAR evaluation is not required.

8. Please apply the procedures in KDB 941225 and other relevant KDB procedures to determine which GPRS and/or EDGE configurations (slots) need testing.

   Ans. Per KDB941225 D03 procedures, for this model, it don't support GSM mode, and we measured the class-12 for GPRS/EDGE with 4up 1down multi-slots.(Page 7-10)

Unless otherwise stated the results shown in this test report refer only to the sample(s) tested and such sample(s) are retained for 90 days only.
除非另有說明，此報告結果僅對測試之樣品負責，同時此樣品僅保留90天。本報告未經本公司書面許可，不可部份複製。
This document is issued by the Company subject to its General Conditions of Service printed overleaf, available on request or accessible at www.sgs.com/terms_and_conditions.htm and, for electronic format documents, subject to Terms and Conditions for Electronic Documents at www.sgs.com/terms_e-document.htm. Attention is drawn to the limitation of liability, indemnification and jurisdiction issues defined therein. Any holder of this document is advised that information contained hereon reflects the Company's findings at the time of its intervention only and within the limits of Client's instructions, if any. The Company's sole responsibility is to its Client and this document does not exonerate parties to a transaction from exercising all their rights and obligations under the transaction documents. This document cannot be reproduced except in full, without prior written approval of the Company. Any unauthorized alteration, forgery or falsification of the content or appearance of this document is unlawful and offenders may be prosecuted to the fullest extent of the law.

9. For the manual submitted to this KDB inquiry, the [FCC RF Radiation Exposure Statement] is incorrect. It must be corrected according to the actual operating configuration and exposure condition tested for compliance.
   Ans. Please refer to user manual uploaded for this submission
10. Please identify the locations of all antennas in the SAR report, including the TV antenna indicated in the manual (that do not need testing).
   Ans. Please see photo of OET65 page 8(Fig.11) for the location of antenna. There is no TV function in this device.

1.7 The SAR Measurement System

A photograph of the SAR measurement System is given in Fig. a. This SAR Measurement System uses a Computer-controlled 3-D stepper motor system (SPEAG DASY 4 professional system). A Model ES3DV3 field probe is used to determine the internal electric fields. The SAR can be obtained from the equation SAR= σ ($|Ei|^2$)/ ρ where σ and ρ are the conductivity and mass density of the tissue-simulant.

The DASY4 system for performing compliance tests consists of the following items:

- A standard high precision 6-axis robot (Staubli RX family) with controller, teach pendant and software. An arm extension is for accommodating the data acquisition electronics (DAE).
- A dosimetric probe, i.e., an isotropic E-field probe optimized and calibrated for usage in tissue simulating liquid. The probe is equipped with an optical surface detector system.
- A data acquisition electronics (DAE) which performs the signal amplification, signal multiplexing, AD-conversion, offset measurements, mechanical surface detection, collision detection, etc.

The unit is battery powered with standard or rechargeable batteries. The signal is optically transmitted to the EOC.

Unless otherwise stated the results shown in this test report refer only to the sample(s) tested and such sample(s) are retained for 90 days only.
除非另有說明，此報告結果僅對測試之樣品負責，同時此樣品僅保留90天。本報告未經本公司書面許可，不可部份複製。
This document is issued by the Company subject to its General Conditions of Service printed overleaf, available on request or accessible at www.sgs.com/terms_and_conditions.htm and, for electronic format documents, subject to Terms and Conditions for Electronic Documents at www.sgs.com/terms_e-document.htm. Attention is drawn to the limitation of liability, indemnification and jurisdiction issues defined therein. Any holder of this document is advised that information contained hereon reflects the Company's findings at the time of its intervention only and within the limits of Client's instructions, if any. The Company's sole responsibility is to its Client and this document does not exonerate parties to a transaction from exercising all their rights and obligations under the transaction documents. This document cannot be reproduced except in full, without prior written approval of the Company. Any unauthorized alteration, forgery or falsification of the content or appearance of this document is unlawful and offenders may be prosecuted to the fullest extent of the law.

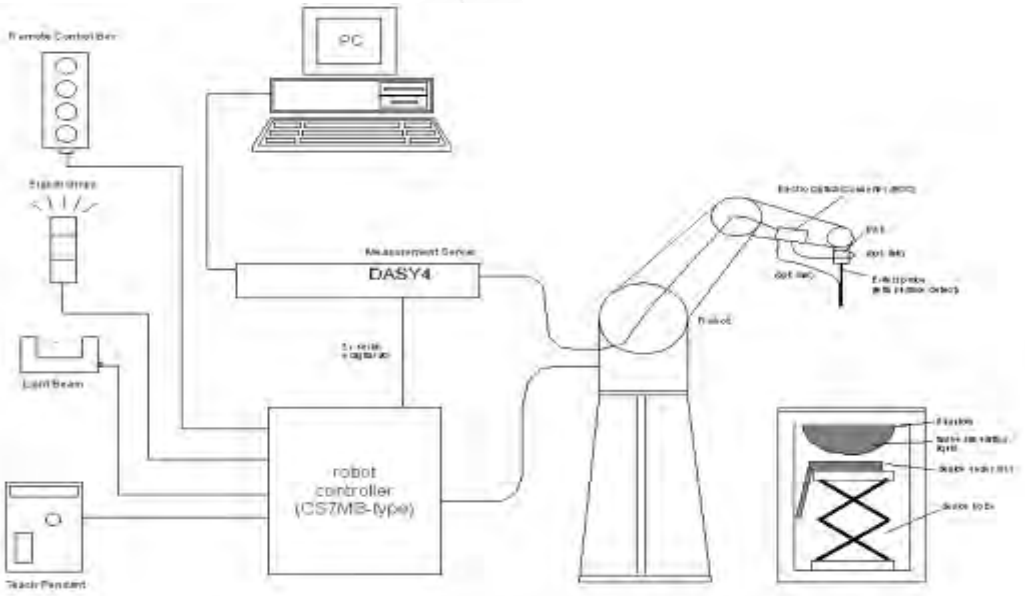

Fig.a The block diagram of SAR system

- The Electro-optical converter (EOC) performs the conversion between optical and electrical of the signals for the digital communication to the DAE and for the analog signal from the optical surface detection. The EOC is connected to the measurement server.
- The function of the measurement server is to perform the time critical tasks such as signal filtering, control of the robot operation and fast movement interrupts.
- A probe alignment unit which improves the (absolute) accuracy of the probe positioning.
  - A computer operating Windows 2000 or Windows XP.
  - DASY4 software.
- Remote control with teach pendant and additional circuitry for robot safety such as warning lamps, etc.
  - The SAM twin phantom enabling testing left-hand and right-hand usage.
  - The device holder for handheld mobile phones.
  - Tissue simulating liquid mixed according to the given recipes.
  - Validation dipole kits allowing to validate the proper functioning of the system.

Unless otherwise stated the results shown in this test report refer only to the sample(s) tested and such sample(s) are retained for 90 days only.
除非另有說明，此報告結果僅對測試之樣品負責，同時此樣品僅保留90天。本報告未經本公司書面許可，不可部份複製。
This document is issued by the Company subject to its General Conditions of Service printed overleaf, available on request or accessible at www.sgs.com/terms_and_conditions.htm and, for electronic format documents, subject to Terms and Conditions for Electronic Documents at www.sgs.com/terms_e-document.htm. Attention is drawn to the limitation of liability, indemnification and jurisdiction issues defined therein. Any holder of this document is advised that information contained hereon reflects the Company's findings at the time of its intervention only and within the limits of Client's instructions, if any. The Company's sole responsibility is to its Client and this document does not exonerate parties to a transaction from exercising all their rights and obligations under the transaction documents. This document cannot be reproduced except in full, without prior written approval of the Company. Any unauthorized alteration, forgery or falsification of the content or appearance of this document is unlawful and offenders may be prosecuted to the fullest extent of the law.

1.8 System Components

ES3DV3 E-Field Probe

Construction	Symmetrical design with triangular core Built-in shielding against static charges PEEK enclosure material (resistant to organic solvents, e.g., DGBE)	
Calibration	Basic Broad Band Calibration in air Conversion Factors (CF) for HSL835/1750/1900/2450 MHz Additional CF for other liquids and frequencies upon request	
Frequency	10 MHz to > 4 GHz, Linearity: ± 0.2 dB (30 MHz to 6 GHz)	
Directivity	± 0.3 dB in HSL (rotation around probe axis) ± 0.5 dB in tissue material (rotation normal to probe axis)	
Dynamic Range	10 µW/g to > 100 mW/g Linearity: ± 0.2 dB (noise: typically < 1 µW/g)	
Dimensions	Overall length: 330 mm (Tip: 20 mm) Tip diameter: 2.5 mm (Body: 12 mm) Typical distance from probe tip to dipole centers: 1 mm	
Application	High precision dosimetric measurements in any exposure scenario (e.g., very strong gradient fields). Only probe which enables compliance testing for frequencies up to 6 GHz with precision of better 30%.	

SAM PHANTOM V4.0C

Construction	The shell corresponds to the specifications of the Specific Anthropomorphic Mannequin (SAM) phantom defined in IEEE 1528-200X, CENELEC 50361 and IEC 62209. It enables the dosimetric evaluation of left and right hand phone usage as well as body mounted usage at the flat phantom region. A cover prevents evaporation of the liquid. Reference markings on the phantom allow the complete setup of all predefined phantom positions and measurement grids by manually teaching three points with the robot.

Unless otherwise stated the results shown in this test report refer only to the sample(s) tested and such sample(s) are retained for 90 days only.
除非另有說明，此報告結果僅對測試之樣品負責，同時此樣品僅保留90天。本報告未經本公司書面許可，不可部份複製。
This document is issued by the Company subject to its General Conditions of Service printed overleaf, available on request or accessible at www.sgs.com/terms_and_conditions.htm and, for electronic format documents, subject to Terms and Conditions for Electronic Documents at www.sgs.com/terms_e-document.htm. Attention is drawn to the limitation of liability, indemnification and jurisdiction issues defined therein. Any holder of this document is advised that information contained hereon reflects the Company's findings at the time of its intervention only and within the limits of Client's instructions, if any. The Company's sole responsibility is to its Client and this document does not exonerate parties to a transaction from exercising all their rights and obligations under the transaction documents. This document cannot be reproduced except in full, without prior written approval of the Company. Any unauthorized alteration, forgery or falsification of the content or appearance of this document is unlawful and offenders may be prosecuted to the fullest extent of the law.

Shell Thickness	2 ± 0.2 mm	
Filling Volume	Approx. 25 liters	
Dimensions	Height: 251 mm; Length: 1000 mm; Width: 500 mm	

DEVICE HOLDER

Construction	The device holder (Supporter) for Notebook is made by POM (polyoxymethylene resin) , which is non-metal and non-conductive. The height can be adjusted to fit varies kind of notebooks.	 Device Holder

Unless otherwise stated the results shown in this test report refer only to the sample(s) tested and such sample(s) are retained for 90 days only.
除非另有說明，此報告結果僅對測試之樣品負責，同時此樣品僅保留90天。本報告未經本公司書面許可，不可部份複製。
This document is issued by the Company subject to its General Conditions of Service printed overleaf, available on request or accessible at www.sgs.com/terms_and_conditions.htm and, for electronic format documents, subject to Terms and Conditions for Electronic Documents at www.sgs.com/terms_e-document.htm. Attention is drawn to the limitation of liability, indemnification and jurisdiction issues defined therein. Any holder of this document is advised that information contained hereon reflects the Company's findings at the time of its intervention only and within the limits of Client's instructions, if any. The Company's sole responsibility is to its Client and this document does not exonerate parties to a transaction from exercising all their rights and obligations under the transaction documents. This document cannot be reproduced except in full, without prior written approval of the Company. Any unauthorized alteration, forgery or falsification of the content or appearance of this document is unlawful and offenders may be prosecuted to the fullest extent of the law.

1.9 SAR System Verification

The microwave circuit arrangement for system verification is sketched in Fig. b. The daily system accuracy verification occurs within the flat section of the SAM phantom. A SAR measurement was performed to see if the measured SAR was within +/- 5% from the target SAR values. These tests were done at 835/1750/1900/2450 MHz. The tests were conducted on the same days as the measurement of the DUT. The obtained results from the system accuracy verification are displayed in the table 1 (SAR values are normalized to 1W forward power delivered to the dipole). During the tests, the ambient temperature of the laboratory was in the range 22.1°C, the relative humidity was in the range 62% and the liquid depth above the ear reference points was above 15 cm in all the cases. It is seen that the system is operating within its specification, as the results are within acceptable tolerance of the reference values.

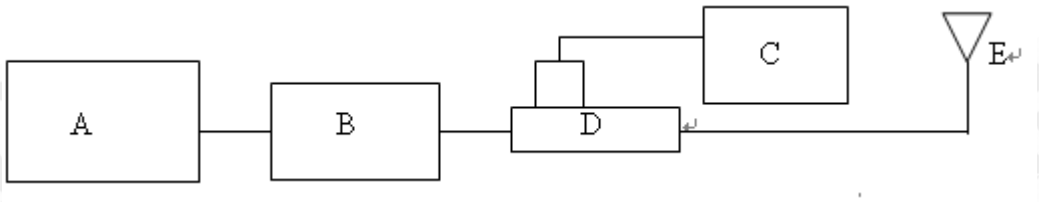

Fig.b The block diagram of system verification

A. Agilent Model 8648D Signal Generator
B. Mini circuits Model ZHL-42 Amplifier
C. Agilent Model ML2495A Power Meter
D. Agilent Model 778D/777D Dual directional coupling
E. Reference dipole antenna

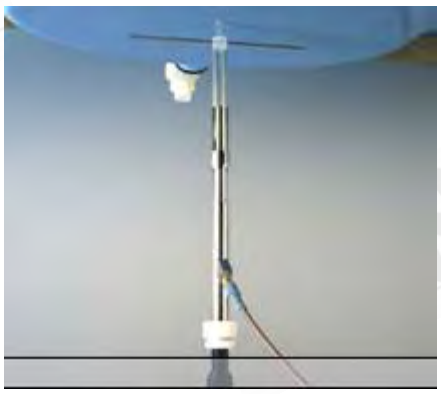

Photograph of the dipole Antenna

Unless otherwise stated the results shown in this test report refer only to the sample(s) tested and such sample(s) are retained for 90 days only.
除非另有說明，此報告結果僅對測試之樣品負責，同時此樣品僅保留90天。本報告未經本公司書面許可，不可部份複製。
This document is issued by the Company subject to its General Conditions of Service printed overleaf, available on request or accessible at www.sgs.com/terms_and_conditions.htm and, for electronic format documents, subject to Terms and Conditions for Electronic Documents at www.sgs.com/terms_e-document.htm. Attention is drawn to the limitation of liability, indemnification and jurisdiction issues defined therein. Any holder of this document is advised that information contained hereon reflects the Company's findings at the time of its intervention only and within the limits of Client's instructions, if any. The Company's sole responsibility is to its Client and this document does not exonerate parties to a transaction from exercising all their rights and obligations under the transaction documents. This document cannot be reproduced except in full, without prior written approval of the Company. Any unauthorized alteration, forgery or falsification of the content or appearance of this document is unlawful and offenders may be prosecuted to the fullest extent of the law.

Validation Kit	Frequency Hz	Target SAR (1g) (Pin=250mW)	Measured SAR (1g)	Measured Date
D835V2 S/N:4d063	850 MHz (Body)	2.53m W/g	2.5 m W/g	2010-12-02
D1750V2 S/N: 1008	1750 MHz (Body)	9.46m W/g	9.74 mW/g	2010-12-02
D1900V2 S/N:5d027	1900 MHz (Body)	10.1m W/g	10.3 mW/g	2010-12-02
D2450V2 S/N: 727	2450 MHz (Body)	13.4m W/g	13.7 mW/g	2010-11-26

Table 2. Results of system validation

1.10 Tissue Simulant Fluid for the Frequency Band

The dielectric properties for this body-simulant fluid were measured by using the Agilent Model 85070D Dielectric Probe (rates frequency band 200 MHz to 20 GHz) in conjunction with HP 8753D Network Analyzer (30 KHz-6000 MHz) by using a procedure detailed in Section V.

All dielectric parameters of tissue simulates were measured within 24 hours of SAR measurements. The depth of the tissue simulant in the flat section of the phantom was 15cm±5mm during all tests. (Fig .2)

Frequency (MHz)	Tissue type	Measurement date/ Limits	Dielectric Parameters		
			ρ	σ (S/m)	Simulated Tissue Temperature(° C)
850	Body	Measured, 2010.12.02	53.9	0.974	21.7
		Recommended Limits	51.49-56.91	0.93-1.03	20-24
1750	Body	Measured, 2010.12.02	53.2	1.48	21.7
		Recommended Limits	51.40-56.81	1.36-1.50	20-24
1900	Body	Measured, 2010.12.02	52.6	1.60	21.7
		Recommended Limits	52.06-57.54	1.45-1.61	20-24
2450	Body	Measured, 2010.11.26	51.9	2.03	21.7
		Recommended Limits	51.49-56.91	1.91-2.11	20-24

Table 3. Dielectric Parameters of Tissue Simulant Fluid

Unless otherwise stated the results shown in this test report refer only to the sample(s) tested and such sample(s) are retained for 90 days only.
除非另有說明，此報告結果僅對測試之樣品負責，同時此樣品僅保留90天。本報告未經本公司書面許可，不可部份複製。
This document is issued by the Company subject to its General Conditions of Service printed overleaf, available on request or accessible at www.sgs.com/terms_and_conditions.htm and, for electronic format documents, subject to Terms and Conditions for Electronic Documents at www.sgs.com/terms_e-document.htm. Attention is drawn to the limitation of liability, indemnification and jurisdiction issues defined therein. Any holder of this document is advised that information contained hereon reflects the Company's findings at the time of its intervention only and within the limits of Client's instructions, if any. The Company's sole responsibility is to its Client and this document does not exonerate parties to a transaction from exercising all their rights and obligations under the transaction documents. This document cannot be reproduced except in full, without prior written approval of the Company. Any unauthorized alteration, forgery or falsification of the content or appearance of this document is unlawful and offenders may be prosecuted to the fullest extent of the law.

The composition of the body tissue simulating liquid is:

Ingredient	850MHz (Body)	1700MHz (Body)	1900MHz (Body)	2450MHz (Body)
DGMBE	X	300.67g	300.67g	301.7ml
Water	631.68 g	716.56 g	716.56 g	698.3ml
Salt	11.72 g	4.0 g	4.0 g	X
Preventol D-7	1.2 g	X	X	X
Cellulose	X	X	X	X
Sugar	600 g	X	X	X
Total amount	1 L (1.0kg)	1 L (1.0kg)	1 L (1.0kg)	1 L (1.0kg)

Table 3. Recipes for tissue simulating liquid

1.11 EVALUATION PROCEDURES

The entire evaluation of the spatial peak values is performed within the Post-processing engine (SEMCAD). The system always gives the maximum values for the 1 g and 10 g cubes. The algorithm to find the cube with highest averaged SAR is divided into the following stages:

1. The extraction of the measured data (grid and values) from the Zoom Scan.
2. The calculation of the SAR value at every measurement point based on all stored data (A/D values and measurement parameters)
3. The generation of a high-resolution mesh within the measured volume
4. The interpolation of all measured values from the measurement grid to the high-resolution grid
5. The extrapolation of the entire 3-D field distribution to the phantom surface over the distance from sensor to surface
6. The calculation of the averaged SAR within masses of 1g and 10g.

The probe is calibrated at the center of the dipole sensors that is located 1 to 2.7mm away from the probe tip. During measurements, the probe stops shortly above the phantom surface, depending on the probe and the surface detecting system. Both distances are included as parameters in the probe configuration file. The software always knows exactly how far away the measured point is from the surface. As the probe cannot directly measure at the surface, the values between the deepest measured point and the surface must be extrapolated. The angle between the probe axis and the surface normal line is less than 30 degree.

In the Area Scan, the gradient of the interpolation function is evaluated to find all the extreme of the SAR distribution. The uncertainty on the locations of the extreme is less than 1/20 of the grid size. Only local maximum within –2 dB of the global maximum are searched and passed for the Cube Scan measurement. In the Cube Scan, the

Unless otherwise stated the results shown in this test report refer only to the sample(s) tested and such sample(s) are retained for 90 days only.
除非另有說明，此報告結果僅對測試之樣品負責，同時此樣品僅保留90天。本報告未經本公司書面許可，不可部份複製。
This document is issued by the Company subject to its General Conditions of Service printed overleaf, available on request or accessible at www.sgs.com/terms_and_conditions.htm and, for electronic format documents, subject to Terms and Conditions for Electronic Documents at www.sgs.com/terms_e-document.htm. Attention is drawn to the limitation of liability, indemnification and jurisdiction issues defined therein. Any holder of this document is advised that information contained hereon reflects the Company's findings at the time of its intervention only and within the limits of Client's instructions, if any. The Company's sole responsibility is to its Client and this document does not exonerate parties to a transaction from exercising all their rights and obligations under the transaction documents. This document cannot be reproduced except in full, without prior written approval of the Company. Any unauthorized alteration, forgery or falsification of the content or appearance of this document is unlawful and offenders may be prosecuted to the fullest extent of the law.

interpolation function is used to extrapolate the Peak SAR from the lowest measurement points to the inner phantom surface (the extrapolation distance). The uncertainty increases with the extrapolation distance. To keep the uncertainty within 1% for the 1 g and 10 g cubes, the extrapolation distance should not be larger than 5mm.

The maximum search is automatically performed after each area scan measurement. It is based on splines in two or three dimensions. The procedure can find the maximum for most SAR distributions even with relatively large grid spacing. After the area scanning measurement, the probe is automatically moved to a position at the interpolated maximum. The following scan can directly use this position for reference, e.g., for a finer resolution grid or the cube evaluations. The 1g and 10g peak evaluations are only available for the predefined cube 7x7x7 scans. The routines are verified and optimized for the grid dimensions used in these cube measurements.

The measured volume of 30x30x30mm contains about 30g of tissue.

The first procedure is an extrapolation (incl. Boundary correction) to get the points between the lowest measured plane and the surface. The next step uses 3D interpolation to get all points within the measured volume. In the last step, a 1g cube is placed numerically into the volume and its averaged SAR is calculated. This cube is the moved around until the highest averaged SAR is found. If the highest SAR is found at the edge of the measured volume, the system will issue a warning: higher SAR values might be found outside of the measured volume. In that case the cube measurement can be repeated, using the new interpolated maximum as the center.

1.12 Test Standards and Limits

According to FCC 47CFR §2.1093(d) The limits to be used for evaluation are based generally on criteria published by the American National Standards Institute (ANSI) for localized specific absorption rate ("SAR") in Section 4.2 of "IEEE Standard for Safety Levels with Respect to Human Exposure to Radio Frequency Electromagnetic Fields, 3 kHz to 300 GHz," ANSI/IEEE C95.1–1992, Copyright 1992 by the Institute of Electrical and Electronics Engineers, Inc., New York, New York 10017. These criteria for SAR evaluation are similar to those recommended by the National Council on Radiation Protection and Measurements (NCRP) in "Biological Effects and Exposure Criteria for Radio frequency Electromagnetic Fields," NCRP Report No. 86, Section 17.4.5. Copyright NCRP, 1986, Bethesda, Maryland 20814.

SAR is a measure of the rate of energy absorption due to exposure to an RF transmitting source. SAR values have been related to threshold levels for potential biological hazards. The criteria to be used are specified in paragraphs (d)(1) and (d)(2) of this section and

Unless otherwise stated the results shown in this test report refer only to the sample(s) tested and such sample(s) are retained for 90 days only.
除非另有說明，此報告結果僅對測試之樣品負責，同時此樣品僅保留90天。本報告未經本公司書面許可，不可部份複製。
This document is issued by the Company subject to its General Conditions of Service printed overleaf, available on request or accessible at www.sgs.com/terms_and_conditions.htm and, for electronic format documents, subject to Terms and Conditions for Electronic Documents at www.sgs.com/terms_e-document.htm. Attention is drawn to the limitation of liability, indemnification and jurisdiction issues defined therein. Any holder of this document is advised that information contained hereon reflects the Company's findings at the time of its intervention only and within the limits of Client's instructions, if any. The Company's sole responsibility is to its Client and this document does not exonerate parties to a transaction from exercising all their rights and obligations under the transaction documents. This document cannot be reproduced except in full, without prior written approval of the Company. Any unauthorized alteration, forgery or falsification of the content or appearance of this document is unlawful and offenders may be prosecuted to the fullest extent of the law.

shall apply for portable devices transmitting in the frequency range from 100 kHz to 6 GHz. Portable devices that transmit at frequencies above 6 GHz are to be evaluated in terms of the MPE limits specified in § 1.1310 of this chapter. Measurements and calculations to demonstrate compliance with MPE field strength or power density limits for devices operating above 6 GHz should be made at a minimum distance of 5 cm from the radiating source.

(1) Limits for Occupational/Controlled exposure: 0.4 W/kg as averaged over the whole-body and spatial peak SAR not exceeding 8 W/kg as averaged over any 1 gram of tissue (defined as a tissue volume in the shape of a cube). Exceptions are the hands, wrists, feet and ankles where the spatial peak SAR shall not exceed 20 W/kg, as averaged over an 10 grams of tissue (defined as a tissue volume in the shape of a cube).

(2) Occupational/Controlled limits apply when persons are exposed as a consequence of their employment provided these persons are fully aware of and exercise control over their exposure. Awareness of exposure can be accomplished by use of warning labels or by specific training or education through appropriate means, such as an RF safety program in a work environment.

(3) Limits for General Population/Uncontrolled exposure: 0.08 W/kg as averaged over the whole-body and spatial peak SAR not exceeding 1.6 W/kg as averaged over any 1 gram of tissue (defined as a tissue volume in the shape of a cube). Exceptions are the hands, wrists, feet and ankles where the spatial peak SAR shall not exceed 4 W/kg, as averaged over any 10 grams of tissue (defined as a tissue volume in the shape of a cube). General Population/Uncontrolled limits apply when the general public may be exposed, or when persons that are exposed as a consequence of their employment may not be fully aware of the potential for exposure or do not exercise control over their exposure. Warning labels placed on consumer devices such as cellular telephones will not be sufficient reason to allow these devices to be evaluated subject to limits for occupational/controlled exposure in paragraph (d)(1) of this section.(Table .4)

Unless otherwise stated the results shown in this test report refer only to the sample(s) tested and such sample(s) are retained for 90 days only.
除非另有說明，此報告結果僅對測試之樣品負責，同時此樣品僅保留90天。本報告未經本公司書面許可，不可部份複製。
This document is issued by the Company subject to its General Conditions of Service printed overleaf, available on request or accessible at www.sgs.com/terms_and_conditions.htm and, for electronic format documents, subject to Terms and Conditions for Electronic Documents at www.sgs.com/terms_e-document.htm. Attention is drawn to the limitation of liability, indemnification and jurisdiction issues defined therein. Any holder of this document is advised that information contained hereon reflects the Company's findings at the time of its intervention only and within the limits of Client's instructions, if any. The Company's sole responsibility is to its Client and this document does not exonerate parties to a transaction from exercising all their rights and obligations under the transaction documents. This document cannot be reproduced except in full, without prior written approval of the Company. Any unauthorized alteration, forgery or falsification of the content or appearance of this document is unlawful and offenders may be prosecuted to the fullest extent of the law.

Human Exposure	Uncontrolled Environment General Population	Controlled Environment Occupational
Spatial Peak SAR (Brain)	1.60 m W/g	8.00 m W/g
Spatial Average SAR (Whole Body)	0.08 m W/g	0.40 m W/g
Spatial Peak SAR (Hands/Feet/Ankle/Wrist)	4.00 m W/g	20.00 m W/g

Table .4 RF exposure limits

Notes:

1. Uncontrolled environments are defined as locations where there is potential exposure of individuals who have no knowledge or control of their potential exposure.
2. Controlled environments are defined as locations where there is potential exposure of individuals who have knowledge of their potential exposure and can exercise control over their exposure.

Unless otherwise stated the results shown in this test report refer only to the sample(s) tested and such sample(s) are retained for 90 days only.
除非另有說明，此報告結果僅對測試之樣品負責，同時此樣品僅保留90天。本報告未經本公司書面許可，不可部份複製。
This document is issued by the Company subject to its General Conditions of Service printed overleaf, available on request or accessible at www.sgs.com/terms_and_conditions.htm and, for electronic format documents, subject to Terms and Conditions for Electronic Documents at www.sgs.com/terms_e-document.htm. Attention is drawn to the limitation of liability, indemnification and jurisdiction issues defined therein. Any holder of this document is advised that information contained hereon reflects the Company's findings at the time of its intervention only and within the limits of Client's instructions, if any. The Company's sole responsibility is to its Client and this document does not exonerate parties to a transaction from exercising all their rights and obligations under the transaction documents. This document cannot be reproduced except in full, without prior written approval of the Company. Any unauthorized alteration, forgery or falsification of the content or appearance of this document is unlawful and offenders may be prosecuted to the fullest extent of the law.

2. Summary of Results

GRRS 850_(4 multi-slot)

Lap-held mode: (proximity sensor is activated)_5mm						
Frequency	Channel	MHz	Conducted Output Power (Average)	Measured(W/kg) 1g	Amb. Temp[˚C]	Liquid Temp[˚C]
850MHz	251	848.8	19.48dBm	0.331	22.1	21.7
Secondary portrait mode: (proximity sensor is NOT activated) _5mm						
Frequency	Channel	MHz	Conducted Output Power (Average)	Measured(W/kg) 1g	Amb. Temp[˚C]	Liquid Temp[˚C]
850MHz	251	848.8	26.42dBm	0.123	22.1	21.7
Secondary landscape mode: (proximity sensor is NOT activated) _5mm						
Frequency	Channel	MHz	Conducted Output Power (Average)	Measured(W/kg) 1g	Amb. Temp[˚C]	Liquid Temp[˚C]
850MHz	251	848.8	26.42dBm	0.327	22.1	21.7
Primary Landscape mode: (proximity sensor is NOT activated) _5mm						
Frequency	Channel	MHz	Conducted Output Power (Average)	Measured(W/kg) 1g	Amb. Temp[˚C]	Liquid Temp[˚C]
850MHz	251	848.8	26.42dBm	0.573	22.1	21.7
Lap-held mode: (proximity sensor is NOT activated) _ 10mm						
Frequency	Channel	MHz	Conducted Output Power (Average)	Measured(W/kg) 1g	Amb. Temp[˚C]	Liquid Temp[˚C]
850MHz	128	824.2	26.35dBm	0.939	22.1	21.7
	190	836.6	26.38dBm	1.22	22.1	21.7
	251	848.8	26.42dBm	1.25	22.1	21.7

Unless otherwise stated the results shown in this test report refer only to the sample(s) tested and such sample(s) are retained for 90 days only.
除非另有說明，此報告結果僅對測試之樣品負責，同時此樣品僅保留90天。本報告未經本公司書面許可，不可部份複製。
This document is issued by the Company subject to its General Conditions of Service printed overleaf, available on request or accessible at www.sgs.com/terms_and_conditions.htm and, for electronic format documents, subject to Terms and Conditions for Electronic Documents at www.sgs.com/terms_e-document.htm. Attention is drawn to the limitation of liability, indemnification and jurisdiction issues defined therein. Any holder of this document is advised that information contained hereon reflects the Company's findings at the time of its intervention only and within the limits of Client's instructions, if any. The Company's sole responsibility is to its Client and this document does not exonerate parties to a transaction from exercising all their rights and obligations under the transaction documents. This document cannot be reproduced except in full, without prior written approval of the Company. Any unauthorized alteration, forgery or falsification of the content or appearance of this document is unlawful and offenders may be prosecuted to the fullest extent of the law.

GPRS 1900(4 multi-slot)

Lap-held mode: (proximity sensor is activated) _5mm						
Frequency	Channel	MHz	Conducted Output Power (Average)	Measured(W/kg) 1g	Amb. Temp[˚C]	Liquid Temp[˚C]
1900MHz	512	1850.2	17.69dBm	0.250	22.1	21.7
Secondary portrait mode: (proximity sensor is NOT activated) _5mm						
Frequency	Channel	MHz	Conducted Output Power (Average)	Measured(W/kg) 1g	Amb. Temp[˚C]	Liquid Temp[˚C]
1900MHz	512	1850.2	25.10dBm	0.026	22.1	21.7
Secondary landscape mode: (proximity sensor is NOT activated) _5mm						
Frequency	Channel	MHz	Conducted Output Power (Average)	Measured(W/kg) 1g	Amb. Temp[˚C]	Liquid Temp[˚C]
1900MHz	512	1850.2	25.10dBm	0.057	22.1	21.7
Primary Landscape mode: (proximity sensor is NOT activated) _5mm						
Frequency	Channel	MHz	Conducted Output Power (Average)	Measured(W/kg) 1g	Amb. Temp[˚C]	Liquid Temp[˚C]
1900MHz	512	1850.2	25.10dBm	0.150	22.1	21.7
Primary portrait mode: (proximity sensor is NOT activated) _10mm						
Frequency	Channel	MHz	Conducted Output Power (Average)	Measured(W/kg) 1g	Amb. Temp[˚C]	Liquid Temp[˚C]
1900MHz	512	1850.2	25.10dBm	0.562	22.1	21.7

Unless otherwise stated the results shown in this test report refer only to the sample(s) tested and such sample(s) are retained for 90 days only.
除非另有說明，此報告結果僅對測試之樣品負責，同時此樣品僅保留90天。本報告未經本公司書面許可，不可部份複製。
This document is issued by the Company subject to its General Conditions of Service printed overleaf, available on request or accessible at www.sgs.com/terms_and_conditions.htm and, for electronic format documents, subject to Terms and Conditions for Electronic Documents at www.sgs.com/terms_e-document.htm. Attention is drawn to the limitation of liability, indemnification and jurisdiction issues defined therein. Any holder of this document is advised that information contained hereon reflects the Company's findings at the time of its intervention only and within the limits of Client's instructions, if any. The Company's sole responsibility is to its Client and this document does not exonerate parties to a transaction from exercising all their rights and obligations under the transaction documents. This document cannot be reproduced except in full, without prior written approval of the Company. Any unauthorized alteration, forgery or falsification of the content or appearance of this document is unlawful and offenders may be prosecuted to the fullest extent of the law.

WCDMA B2

Lap-held mode: (proximity sensor is activated) _5mm						
Frequency	Channel	MHz	Conducted Output Power (Average)	Measured(W/kg) 1g	Amb. Temp[˚C]	Liquid Temp[˚C]
WCDMA B2	9400	1880	15.70dBm	0.312	22.1	21.7
Secondary portrait mode: (proximity sensor is NOT activated) _5mm						
Frequency	Channel	MHz	Conducted Output Power (Average)	Measured(W/kg) 1g	Amb. Temp[˚C]	Liquid Temp[˚C]
WCDMA B2	9262	1852.4	22.85dBm	0.032	22.1	21.7
Secondary landscape mode: (proximity sensor is NOT activated) _5mm						
Frequency	Channel	MHz	Conducted Output Power (Average)	Measured(W/kg) 1g	Amb. Temp[˚C]	Liquid Temp[˚C]
WCDMA B2	9262	1852.4	22.85dBm	0.084	22.1	21.7
Primary Landscape mode: (proximity sensor is NOT activated) _5mm						
Frequency	Channel	MHz	Conducted Output Power (Average)	Measured(W/kg) 1g	Amb. Temp[˚C]	Liquid Temp[˚C]
WCDMA B2	9262	1852.4	22.85dBm	0.205	22.1	21.7
Lap-held mode: (proximity sensor is NOT activated) _10mm						
Frequency	Channel	MHz	Conducted Output Power (Average)	Measured(W/kg) 1g	Amb. Temp[˚C]	Liquid Temp[˚C]
WCDMA B2	9262	1852.4	22.85dBm	0.795	22.1	21.7

Unless otherwise stated the results shown in this test report refer only to the sample(s) tested and such sample(s) are retained for 90 days only.
除非另有說明，此報告結果僅對測試之樣品負責，同時此樣品僅保留90天。本報告未經本公司書面許可，不可部份複製。
This document is issued by the Company subject to its General Conditions of Service printed overleaf, available on request or accessible at www.sgs.com/terms_and_conditions.htm and, for electronic format documents, subject to Terms and Conditions for Electronic Documents at www.sgs.com/terms_e-document.htm. Attention is drawn to the limitation of liability, indemnification and jurisdiction issues defined therein. Any holder of this document is advised that information contained hereon reflects the Company's findings at the time of its intervention only and within the limits of Client's instructions, if any. The Company's sole responsibility is to its Client and this document does not exonerate parties to a transaction from exercising all their rights and obligations under the transaction documents. This document cannot be reproduced except in full, without prior written approval of the Company. Any unauthorized alteration, forgery or falsification of the content or appearance of this document is unlawful and offenders may be prosecuted to the fullest extent of the law.

WCDMA B4

Lap-held mode: (proximity sensor is activated) _5mm						
Frequency	Channel	MHz	Conducted Output Power (Average)	Measured(W/kg) 1g	Amb. Temp[˚C]	Liquid Temp[˚C]
WCDMA B4	1412	1732.4	16.03dBm	0.330	22.1	21.7
Secondary portrait mode: (proximity sensor is NOT activated) _5mm						
Frequency	Channel	MHz	Conducted Output Power (Average)	Measured(W/kg) 1g	Amb. Temp[˚C]	Liquid Temp[˚C]
WCDMA B4	1412	1732.4	23.13dBm	0.02	22.1	21.7
Secondary landscape mode: (proximity sensor is NOT activated) _5mm						
Frequency	Channel	MHz	Conducted Output Power (Average)	Measured(W/kg) 1g	Amb. Temp[˚C]	Liquid Temp[˚C]
WCDMA B4	1412	1732.4	23.13dBm	0.014	22.1	21.7
Primary Landscape mode: (proximity sensor is NOT activated) _5mm						
Frequency	Channel	MHz	Conducted Output Power (Average)	Measured(W/kg) 1g	Amb. Temp[˚C]	Liquid Temp[˚C]
WCDMA B4	1412	1732.4	23.13dBm	0.146	22.1	21.7
Lap-held mode: (proximity sensor is NOT activated) _10mm						
Frequency	Channel	MHz	Conducted Output Power (Average)	Measured(W/kg) 1g	Amb. Temp[˚C]	Liquid Temp[˚C]
WCDMA B4	1412	1732.4	23.13dBm	0.705	22.1	21.7

Unless otherwise stated the results shown in this test report refer only to the sample(s) tested and such sample(s) are retained for 90 days only.
除非另有說明，此報告結果僅對測試之樣品負責，同時此樣品僅保留90天。本報告未經本公司書面許可，不可部份複製。
This document is issued by the Company subject to its General Conditions of Service printed overleaf, available on request or accessible at www.sgs.com/terms_and_conditions.htm and, for electronic format documents, subject to Terms and Conditions for Electronic Documents at www.sgs.com/terms_e-document.htm. Attention is drawn to the limitation of liability, indemnification and jurisdiction issues defined therein. Any holder of this document is advised that information contained hereon reflects the Company's findings at the time of its intervention only and within the limits of Client's instructions, if any. The Company's sole responsibility is to its Client and this document does not exonerate parties to a transaction from exercising all their rights and obligations under the transaction documents. This document cannot be reproduced except in full, without prior written approval of the Company. Any unauthorized alteration, forgery or falsification of the content or appearance of this document is unlawful and offenders may be prosecuted to the fullest extent of the law.

WCDMA B5

Lap-held mode: (proximity sensor is activated) _5mm						
Frequency	Channel	MHz	Conducted Output Power (Average)	Measured(W/kg) 1g	Amb. Temp[˚C]	Liquid Temp[˚C]
WCDMA B5	4132	826.4	16.37dBm	0.462	22.1	21.7
Secondary portrait mode: (proximity sensor is NOT activated) _5mm						
Frequency	Channel	MHz	Conducted Output Power (Average)	Measured(W/kg) 1g	Amb. Temp[˚C]	Liquid Temp[˚C]
WCDMA B5	4132	826.4	23.00dBm	0.103	22.1	21.7
Secondary landscape mode: (proximity sensor is NOT activated) _5mm						
Frequency	Channel	MHz	Conducted Output Power (Average)	Measured(W/kg) 1g	Amb. Temp[˚C]	Liquid Temp[˚C]
WCDMA B5	4132	826.4	23.00dBm	0.173	22.1	21.7
Primary Landscape mode: (proximity sensor is NOT activated) _5mm						
Frequency	Channel	MHz	Conducted Output Power (Average)	Measured(W/kg) 1g	Amb. Temp[˚C]	Liquid Temp[˚C]
WCDMA B5	4132	826.4	23.00dBm	0.271	22.1	21.7
Lap-held mode: (proximity sensor is NOT activated) _10mm						
Frequency	Channel	MHz	Conducted Output Power (Average)	Measured(W/kg) 1g	Amb. Temp[˚C]	Liquid Temp[˚C]
WCDMA B5	4132	826.4	23.00dBm	1.15	22.1	21.7
	4182	836.6	22.98dBm	1.2	22.1	21.7
	4233	846.6	22.92dBm	1.08	22.1	21.7

Unless otherwise stated the results shown in this test report refer only to the sample(s) tested and such sample(s) are retained for 90 days only.
除非另有說明，此報告結果僅對測試之樣品負責，同時此樣品僅保留90天。本報告未經本公司書面許可，不可部份複製。
This document is issued by the Company subject to its General Conditions of Service printed overleaf, available on request or accessible at www.sgs.com/terms_and_conditions.htm and, for electronic format documents, subject to Terms and Conditions for Electronic Documents at www.sgs.com/terms_e-document.htm. Attention is drawn to the limitation of liability, indemnification and jurisdiction issues defined therein. Any holder of this document is advised that information contained hereon reflects the Company's findings at the time of its intervention only and within the limits of Client's instructions, if any. The Company's sole responsibility is to its Client and this document does not exonerate parties to a transaction from exercising all their rights and obligations under the transaction documents. This document cannot be reproduced except in full, without prior written approval of the Company. Any unauthorized alteration, forgery or falsification of the content or appearance of this document is unlawful and offenders may be prosecuted to the fullest extent of the law.

WLAN802.11 b

Lap-held mode: (proximity sensor is NOT activated) _5mm						
Frequency	Channel	MHz	Conducted Output Power (Average)	Measured(W/kg) 1g	Amb. Temp[˚C]	Liquid Temp[˚C]
2450MHz	6	2437	14.69dBm	0.329	22.1	21.7
Secondary portrait mode: (proximity sensor is NOT activated) _5mm						
Frequency	Channel	MHz	Conducted Output Power (Average)	Measured(W/kg) 1g	Amb. Temp[˚C]	Liquid Temp[˚C]
2450MHz	6	2437	14.69dBm	0.051	22.1	21.7
Secondary landscape mode: (proximity sensor is NOT activated) _5mm						
Frequency	Channel	MHz	Conducted Output Power (Average)	Measured(W/kg) 1g	Amb. Temp[˚C]	Liquid Temp[˚C]
2450MHz	6	2437	14.69dBm	0.116	22.1	21.7
Primary Landscape mode: (proximity sensor is NOT activated) _5mm						
Frequency	Channel	MHz	Conducted Output Power (Average)	Measured(W/kg) 1g	Amb. Temp[˚C]	Liquid Temp[˚C]
2450MHz	6	2437	14.69dBm	0.025	22.1	21.7

Unless otherwise stated the results shown in this test report refer only to the sample(s) tested and such sample(s) are retained for 90 days only.
除非另有說明，此報告結果僅對測試之樣品負責，同時此樣品僅保留90天。本報告未經本公司書面許可，不可部份複製。
This document is issued by the Company subject to its General Conditions of Service printed overleaf, available on request or accessible at www.sgs.com/terms_and_conditions.htm and, for electronic format documents, subject to Terms and Conditions for Electronic Documents at www.sgs.com/terms_e-document.htm. Attention is drawn to the limitation of liability, indemnification and jurisdiction issues defined therein. Any holder of this document is advised that information contained hereon reflects the Company's findings at the time of its intervention only and within the limits of Client's instructions, if any. The Company's sole responsibility is to its Client and this document does not exonerate parties to a transaction from exercising all their rights and obligations under the transaction documents. This document cannot be reproduced except in full, without prior written approval of the Company. Any unauthorized alteration, forgery or falsification of the content or appearance of this document is unlawful and offenders may be prosecuted to the fullest extent of the law.

WLAN802.11 g

Lap-held mode: (proximity sensor is NOT activated) _5mm						
Frequency	Channel	MHz	Conducted Output Power (Average)	Measured(W/kg) 1g	Amb. Temp[˚C]	Liquid Temp[˚C]
2450MHz	6	2437	14.98dBm	0.258	22.1	21.7
Secondary portrait mode: (proximity sensor is NOT activated) _5mm						
Frequency	Channel	MHz	Conducted Output Power (Average)	Measured(W/kg) 1g	Amb. Temp[˚C]	Liquid Temp[˚C]
2450MHz	6	2437	14.98dBm	0.096	22.1	21.7
Secondary landscape mode: (proximity sensor is NOT activated) _5mm						
Frequency	Channel	MHz	Conducted Output Power (Average)	Measured(W/kg) 1g	Amb. Temp[˚C]	Liquid Temp[˚C]
2450MHz	6	2437	14.98dBm	0.123	22.1	21.7
Primary Landscape mode: (proximity sensor is NOT activated) _5mm						
Frequency	Channel	MHz	Conducted Output Power (Average)	Measured(W/kg) 1g	Amb. Temp[˚C]	Liquid Temp[˚C]
2450MHz	6	2437	14.98dBm	0.03	22.1	21.7

Unless otherwise stated the results shown in this test report refer only to the sample(s) tested and such sample(s) are retained for 90 days only.
除非另有說明，此報告結果僅對測試之樣品負責，同時此樣品僅保留90天。本報告未經本公司書面許可，不可部份複製。
This document is issued by the Company subject to its General Conditions of Service printed overleaf, available on request or accessible at www.sgs.com/terms_and_conditions.htm and, for electronic format documents, subject to Terms and Conditions for Electronic Documents at www.sgs.com/terms_e-document.htm. Attention is drawn to the limitation of liability, indemnification and jurisdiction issues defined therein. Any holder of this document is advised that information contained hereon reflects the Company's findings at the time of its intervention only and within the limits of Client's instructions, if any. The Company's sole responsibility is to its Client and this document does not exonerate parties to a transaction from exercising all their rights and obligations under the transaction documents. This document cannot be reproduced except in full, without prior written approval of the Company. Any unauthorized alteration, forgery or falsification of the content or appearance of this document is unlawful and offenders may be prosecuted to the fullest extent of the law.

WLAN802.11 n(20M)

Lap-held mode: (proximity sensor is NOT activated) _5mm						
Frequency	Channel	MHz	Conducted Output Power (Average)	Measured(W/kg) 1g	Amb. Temp[˚C]	Liquid Temp[˚C]
2450MHz	6	2437	15.25dBm	0.244	22.1	21.7
Secondary portrait mode: (proximity sensor is NOT activated) _5mm						
Frequency	Channel	MHz	Conducted Output Power (Average)	Measured(W/kg) 1g	Amb. Temp[˚C]	Liquid Temp[˚C]
2450MHz	6	2437	15.25dBm	0.058	22.1	21.7
Secondary landscape mode: (proximity sensor is NOT activated) _5mm						
Frequency	Channel	MHz	Conducted Output Power (Average)	Measured(W/kg) 1g	Amb. Temp[˚C]	Liquid Temp[˚C]
2450MHz	6	2437	15.25dBm	0.071	22.1	21.7
Primary Landscape mode: (proximity sensor is NOT activated) _5mm						
Frequency	Channel	MHz	Conducted Output Power (Average)	Measured(W/kg) 1g	Amb. Temp[˚C]	Liquid Temp[˚C]
2450MHz	6	2437	15.25dBm	0.016	22.1	21.7

Unless otherwise stated the results shown in this test report refer only to the sample(s) tested and such sample(s) are retained for 90 days only.
除非另有說明，此報告結果僅對測試之樣品負責，同時此樣品僅保留90天。本報告未經本公司書面許可，不可部份複製。
This document is issued by the Company subject to its General Conditions of Service printed overleaf, available on request or accessible at www.sgs.com/terms_and_conditions.htm and, for electronic format documents, subject to Terms and Conditions for Electronic Documents at www.sgs.com/terms_e-document.htm. Attention is drawn to the limitation of liability, indemnification and jurisdiction issues defined therein. Any holder of this document is advised that information contained hereon reflects the Company's findings at the time of its intervention only and within the limits of Client's instructions, if any. The Company's sole responsibility is to its Client and this document does not exonerate parties to a transaction from exercising all their rights and obligations under the transaction documents. This document cannot be reproduced except in full, without prior written approval of the Company. Any unauthorized alteration, forgery or falsification of the content or appearance of this document is unlawful and offenders may be prosecuted to the fullest extent of the law.

3. Instruments List

Manufacturer	Device	Type	Serial number	Date of last calibration
Schmid & Partner Engineering AG	Dosimetric E-Field Probe	ES3DV3	3172	May.21.2010
Schmid & Partner Engineering AG	850/1750/1900/2450 MHz System Validation Dipole	D835V2	4d063	May.21.2010
		D1750V2	1008	May.26.2010
		D1900V2	5d027	Apr.28.2010
		D2450V2	727	Apr.29.2010
Schmid & Partner Engineering AG	Data acquisition Electronics	DAE4	547	Aug.18.2010
Schmid & Partner Engineering AG	Software	DASY 4 V4.7 Build 80	N/A	Calibration not required
Schmid & Partner Engineering AG	Phantom	SAM	N/A	Calibration not required
HP	Network Analyzer	8753D	3410A05662	Mar.30.2010
HP	Dielectric Probe Kit	85070D	US01440168	Calibration not required
Agilent	Dual-directional coupler	778D	50313	Aug.25.2010
		777D	50114	Aug.25.2010
Agilent	RF Signal Generator	8648D	3847M00432	Jun.04.2010
Agilent	Power Sensor	U2001B	MY48100169	Apr.30.2010
R&S	Radio Communication Test	CMU200	113505	Mar.25.2010

Unless otherwise stated the results shown in this test report refer only to the sample(s) tested and such sample(s) are retained for 90 days only.
除非另有說明，此報告結果僅對測試之樣品負責，同時此樣品僅保留90天。本報告未經本公司書面許可，不可部份複製。
This document is issued by the Company subject to its General Conditions of Service printed overleaf, available on request or accessible at www.sgs.com/terms_and_conditions.htm and, for electronic format documents, subject to Terms and Conditions for Electronic Documents at www.sgs.com/terms_e-document.htm. Attention is drawn to the limitation of liability, indemnification and jurisdiction issues defined therein. Any holder of this document is advised that information contained hereon reflects the Company's findings at the time of its intervention only and within the limits of Client's instructions, if any. The Company's sole responsibility is to its Client and this document does not exonerate parties to a transaction from exercising all their rights and obligations under the transaction documents. This document cannot be reproduced except in full, without prior written approval of the Company. Any unauthorized alteration, forgery or falsification of the content or appearance of this document is unlawful and offenders may be prosecuted to the fullest extent of the law.

4. Measurements

Date: 2010/12/2

Lap-held mode_GPRS850_CH251

DUT: M02M;

Communication System: GSM 850; Frequency: 848.8 MHz;Duty Cycle: 1:2
Medium: Muscle 900 MHz Medium parameters used: f = 849 MHz; σ = 0.988 mho/m; ε_r = 53.7; ρ = 1000 kg/m^3
Phantom section: Flat Section

- Probe: ES3DV3 - SN3172; ConvF(5.84, 5.84, 5.84); Calibrated: 2010/5/21
- Sensor-Surface: 4mm (Mechanical Surface Detection)
- Electronics: DAE4 Sn547; Calibrated: 2010/8/18
- Phantom: SAM1; Type: SAM 4.0; Serial: TP:1419
- Measurement SW: DASY4, V4.7 Build 80; Postprocessing SW: SEMCAD, V1.8 Build 186

body/Area Scan (91x151x1): Measurement grid: dx=15mm, dy=15mm
Maximum value of SAR (interpolated) = 0.352 mW/g
body/Zoom Scan (5x5x7)/Cube 0: Measurement grid: dx=8mm, dy=8mm, dz=5mm
Reference Value = 3.63 V/m; Power Drift = 0.162 dB
Peak SAR (extrapolated) = 0.552 W/kg
SAR(1 g) = 0.331 mW/g; SAR(10 g) = 0.194 mW/g
Maximum value of SAR (measured) = 0.354 mW/g

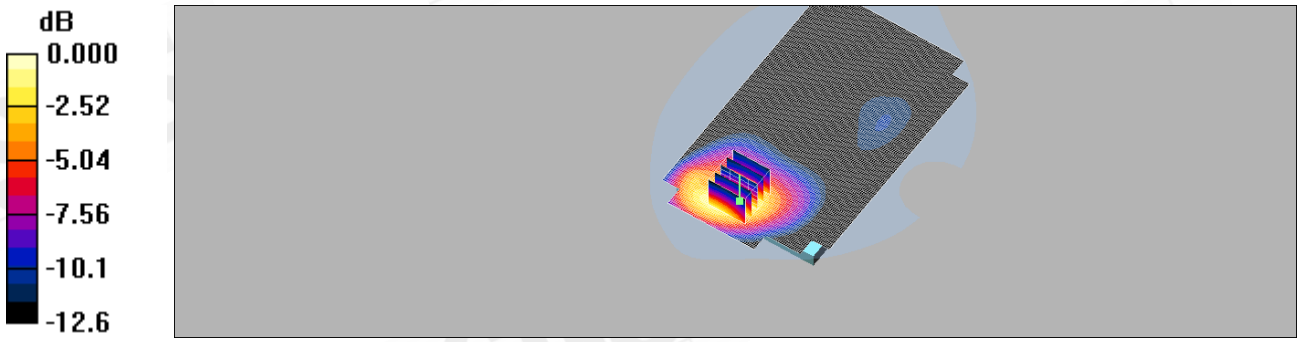

0 dB = 0.354mW/g

Unless otherwise stated the results shown in this test report refer only to the sample(s) tested and such sample(s) are retained for 90 days only.
除非另有說明，此報告結果僅對測試之樣品負責，同時此樣品僅保留90天。本報告未經本公司書面許可，不可部份複製。
This document is issued by the Company subject to its General Conditions of Service printed overleaf, available on request or accessible at www.sgs.com/terms_and_conditions.htm and, for electronic format documents, subject to Terms and Conditions for Electronic Documents at www.sgs.com/terms_e-document.htm. Attention is drawn to the limitation of liability, indemnification and jurisdiction issues defined therein. Any holder of this document is advised that information contained hereon reflects the Company's findings at the time of its intervention only and within the limits of Client's instructions, if any. The Company's sole responsibility is to its Client and this document does not exonerate parties to a transaction from exercising all their rights and obligations under the transaction documents. This document cannot be reproduced except in full, without prior written approval of the Company. Any unauthorized alteration, forgery or falsification of the content or appearance of this document is unlawful and offenders may be prosecuted to the fullest extent of the law.

Date: 2010/12/2

Secondary portrait mode_GPRS850_CH251

DUT: M02M;

Communication System: GSM 850; Frequency: 848.8 MHz;Duty Cycle: 1:2
Medium: Muscle 900 MHz Medium parameters used: f = 849 MHz; σ = 0.988 mho/m; ε_r = 53.7; ρ = 1000 kg/m^3
Phantom section: Flat Section

DASY4 Configuration:

- Probe: ES3DV3 - SN3172; ConvF(5.84, 5.84, 5.84); Calibrated: 2010/5/21
- Sensor-Surface: 4mm (Mechanical Surface Detection)
- Electronics: DAE4 Sn547; Calibrated: 2010/8/18
- Phantom: SAM1; Type: SAM 4.0; Serial: TP:1419
- Measurement SW: DASY4, V4.7 Build 80; Postprocessing SW: SEMCAD, V1.8 Build 186

body/Area Scan (41x101x1): Measurement grid: dx=15mm, dy=15mm
Maximum value of SAR (interpolated) = 0.130 mW/g

body/Zoom Scan (5x5x7)/Cube 0: Measurement grid: dx=8mm, dy=8mm, dz=5mm
Reference Value = 10.3 V/m; Power Drift = 0.019 dB
Peak SAR (extrapolated) = 0.168 W/kg
SAR(1 g) = 0.123 mW/g; SAR(10 g) = 0.088 mW/g
Maximum value of SAR (measured) = 0.131 mW/g

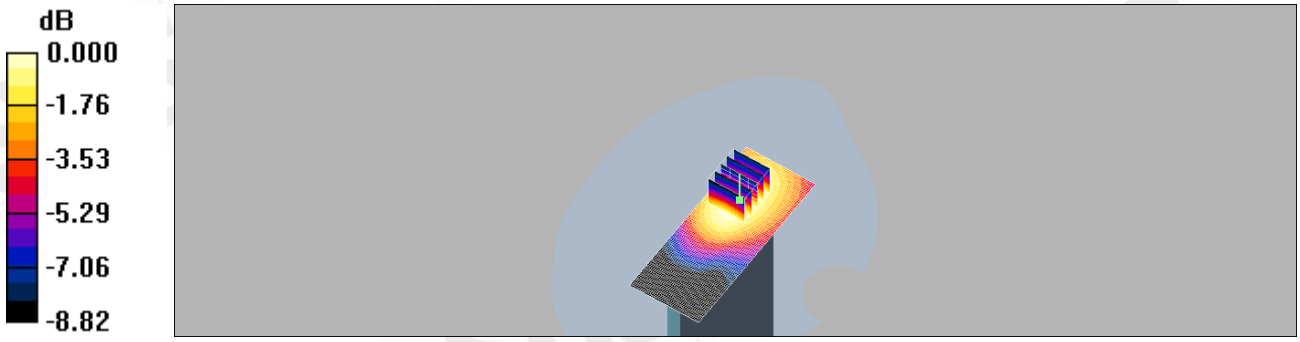

0 dB = 0.131mW/g

Unless otherwise stated the results shown in this test report refer only to the sample(s) tested and such sample(s) are retained for 90 days only.
除非另有說明，此報告結果僅對測試之樣品負責，同時此樣品僅保留90天。本報告未經本公司書面許可，不可部份複製。
This document is issued by the Company subject to its General Conditions of Service printed overleaf, available on request or accessible at www.sgs.com/terms_and_conditions.htm and, for electronic format documents, subject to Terms and Conditions for Electronic Documents at www.sgs.com/terms_e-document.htm. Attention is drawn to the limitation of liability, indemnification and jurisdiction issues defined therein. Any holder of this document is advised that information contained hereon reflects the Company's findings at the time of its intervention only and within the limits of Client's instructions, if any. The Company's sole responsibility is to its Client and this document does not exonerate parties to a transaction from exercising all their rights and obligations under the transaction documents. This document cannot be reproduced except in full, without prior written approval of the Company. Any unauthorized alteration, forgery or falsification of the content or appearance of this document is unlawful and offenders may be prosecuted to the fullest extent of the law.

Date: 2010/12/2

Secondary landscape mode_GPRS850_CH251

DUT: M02M;

Communication System: GSM 850; Frequency: 848.8 MHz;Duty Cycle: 1:2
Medium: Muscle 900 MHz Medium parameters used: f = 849 MHz; σ = 0.988 mho/m; ε_r = 53.7; ρ = 1000 kg/m^3
Phantom section: Flat Section

DASY4 Configuration:

- Probe: ES3DV3 - SN3172; ConvF(5.84, 5.84, 5.84); Calibrated: 2010/5/21
- Sensor-Surface: 4mm (Mechanical Surface Detection)
- Electronics: DAE4 Sn547; Calibrated: 2010/8/18
- Phantom: SAM1; Type: SAM 4.0; Serial: TP:1419
- Measurement SW: DASY4, V4.7 Build 80; Postprocessing SW: SEMCAD, V1.8 Build 186

body/Area Scan (41x131x1): Measurement grid: dx=15mm, dy=15mm
Maximum value of SAR (interpolated) = 0.348 mW/g

body/Zoom Scan (5x5x7)/Cube 0: Measurement grid: dx=8mm, dy=8mm, dz=5mm
Reference Value = 15.8 V/m; Power Drift = -0.177 dB
Peak SAR (extrapolated) = 0.495 W/kg
SAR(1 g) = 0.327 mW/g; SAR(10 g) = 0.215 mW/g
Maximum value of SAR (measured) = 0.356 mW/g

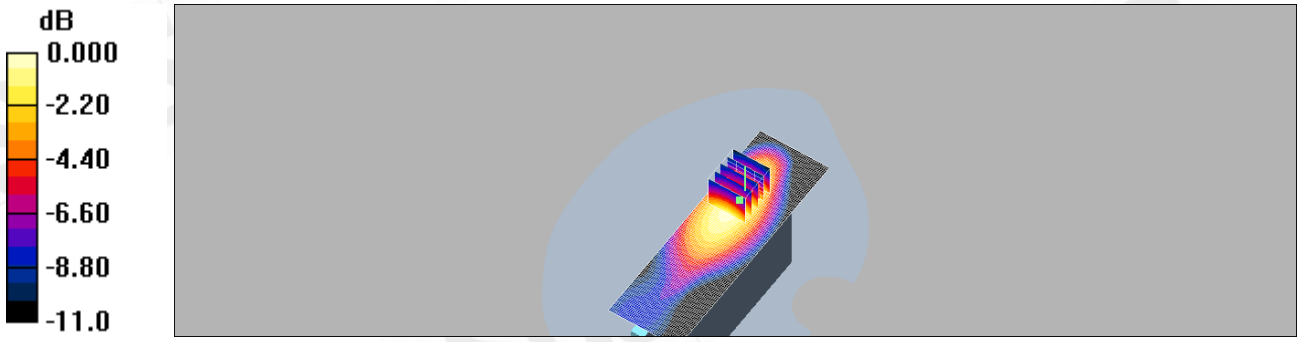

0 dB = 0.356mW/g

Unless otherwise stated the results shown in this test report refer only to the sample(s) tested and such sample(s) are retained for 90 days only.
除非另有說明，此報告結果僅對測試之樣品負責，同時此樣品僅保留90天。本報告未經本公司書面許可，不可部份複製。
This document is issued by the Company subject to its General Conditions of Service printed overleaf, available on request or accessible at www.sgs.com/terms_and_conditions.htm and, for electronic format documents, subject to Terms and Conditions for Electronic Documents at www.sgs.com/terms_e-document.htm. Attention is drawn to the limitation of liability, indemnification and jurisdiction issues defined therein. Any holder of this document is advised that information contained hereon reflects the Company's findings at the time of its intervention only and within the limits of Client's instructions, if any. The Company's sole responsibility is to its Client and this document does not exonerate parties to a transaction from exercising all their rights and obligations under the transaction documents. This document cannot be reproduced except in full, without prior written approval of the Company. Any unauthorized alteration, forgery or falsification of the content or appearance of this document is unlawful and offenders may be prosecuted to the fullest extent of the law.

Date: 2010/12/2

Primary Landscape mode_GPRS850_CH251

DUT: M02M;

Communication System: GSM 850; Frequency: 848.8 MHz;Duty Cycle: 1:2
Medium: Muscle 900 MHz Medium parameters used: f = 849 MHz; σ = 0.988 mho/m; ε_r = 53.7; ρ = 1000 kg/m^3
Phantom section: Flat Section

DASY4 Configuration:

- Probe: ES3DV3 - SN3172; ConvF(5.84, 5.84, 5.84); Calibrated: 2010/5/21
- Sensor-Surface: 4mm (Mechanical Surface Detection)
- Electronics: DAE4 Sn547; Calibrated: 2010/8/18
- Phantom: SAM1; Type: SAM 4.0; Serial: TP:1419
- Measurement SW: DASY4, V4.7 Build 80; Postprocessing SW: SEMCAD, V1.8 Build 186

body/Area Scan (41x131x1): Measurement grid: dx=15mm, dy=15mm
Maximum value of SAR (interpolated) = 0.608 mW/g

body/Zoom Scan (5x5x7)/Cube 0: Measurement grid: dx=8mm, dy=8mm, dz=5mm
Reference Value = 24.2 V/m; Power Drift = -0.004 dB
Peak SAR (extrapolated) = 0.827 W/kg
SAR(1 g) = 0.573 mW/g; SAR(10 g) = 0.385 mW/g
Maximum value of SAR (measured) = 0.615 mW/g

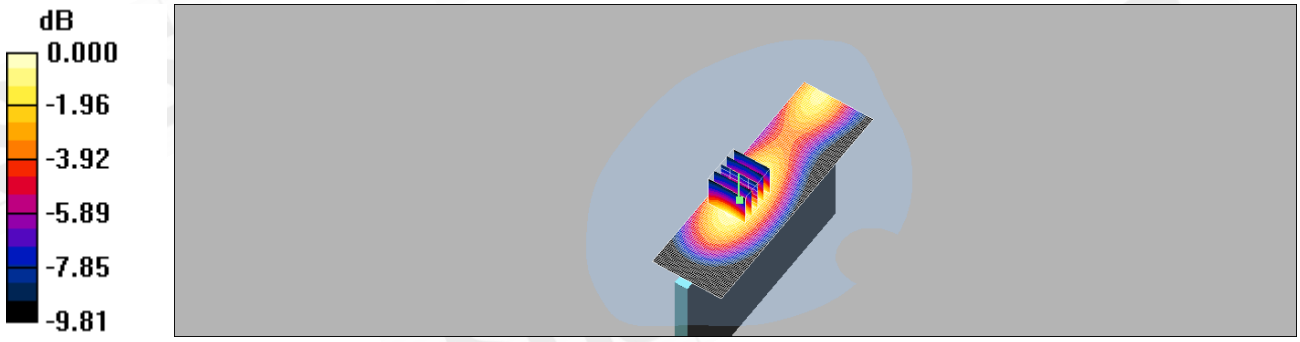

0 dB = 0.615mW/g

Unless otherwise stated the results shown in this test report refer only to the sample(s) tested and such sample(s) are retained for 90 days only.
除非另有說明，此報告結果僅對測試之樣品負責，同時此樣品僅保留90天。本報告未經本公司書面許可，不可部份複製。
This document is issued by the Company subject to its General Conditions of Service printed overleaf, available on request or accessible at www.sgs.com/terms_and_conditions.htm and, for electronic format documents, subject to Terms and Conditions for Electronic Documents at www.sgs.com/terms_e-document.htm. Attention is drawn to the limitation of liability, indemnification and jurisdiction issues defined therein. Any holder of this document is advised that information contained hereon reflects the Company's findings at the time of its intervention only and within the limits of Client's instructions, if any. The Company's sole responsibility is to its Client and this document does not exonerate parties to a transaction from exercising all their rights and obligations under the transaction documents. This document cannot be reproduced except in full, without prior written approval of the Company. Any unauthorized alteration, forgery or falsification of the content or appearance of this document is unlawful and offenders may be prosecuted to the fullest extent of the law.

Date: 2010/12/2

Lap-held mode_GPRS850_CH128_10mm

DUT: M02M;

Communication System: GSM 850; Frequency: 824.2 MHz;Duty Cycle: 1:2
Medium: Muscle 900 MHz Medium parameters used (interpolated): f = 824.2 MHz; σ = 0.962 mho/m; ε_r = 54; ρ = 1000 kg/m^3
Phantom section: Flat Section

DASY4 Configuration:

- Probe: ES3DV3 - SN3172; ConvF(5.84, 5.84, 5.84); Calibrated: 2010/5/21
- Sensor-Surface: 4mm (Mechanical Surface Detection)
- Electronics: DAE4 Sn547; Calibrated: 2010/8/18
- Phantom: SAM1; Type: SAM 4.0; Serial: TP:1419
- Measurement SW: DASY4, V4.7 Build 80; Postprocessing SW: SEMCAD, V1.8 Build 186

body/Area Scan (91x151x1): Measurement grid: dx=15mm, dy=15mm
Maximum value of SAR (interpolated) = 1.01 mW/g

body/Zoom Scan (5x5x7)/Cube 0: Measurement grid: dx=8mm, dy=8mm, dz=5mm
Reference Value = 10.6 V/m; Power Drift = -0.117 dB
Peak SAR (extrapolated) = 1.42 W/kg
SAR(1 g) = 0.939 mW/g; SAR(10 g) = 0.592 mW/g
Maximum value of SAR (measured) = 1.02 mW/g

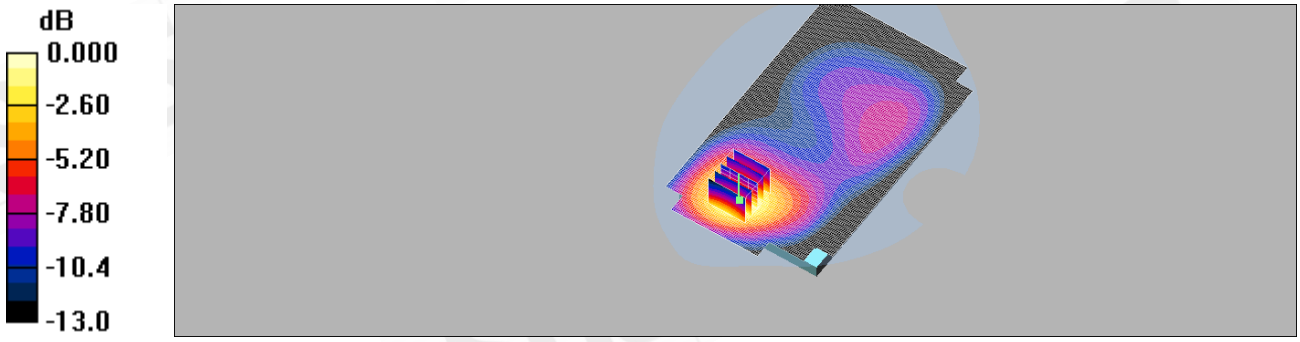

0 dB = 1.02mW/g

Unless otherwise stated the results shown in this test report refer only to the sample(s) tested and such sample(s) are retained for 90 days only.
除非另有說明，此報告結果僅對測試之樣品負責，同時此樣品僅保留90天。本報告未經本公司書面許可，不可部份複製。
This document is issued by the Company subject to its General Conditions of Service printed overleaf, available on request or accessible at www.sgs.com/terms_and_conditions.htm and, for electronic format documents, subject to Terms and Conditions for Electronic Documents at www.sgs.com/terms_e-document.htm. Attention is drawn to the limitation of liability, indemnification and jurisdiction issues defined therein. Any holder of this document is advised that information contained hereon reflects the Company's findings at the time of its intervention only and within the limits of Client's instructions, if any. The Company's sole responsibility is to its Client and this document does not exonerate parties to a transaction from exercising all their rights and obligations under the transaction documents. This document cannot be reproduced except in full, without prior written approval of the Company. Any unauthorized alteration, forgery or falsification of the content or appearance of this document is unlawful and offenders may be prosecuted to the fullest extent of the law.

Date: 2010/12/2

Lap-held mode_GPRS850_CH190_10mm

DUT: M02M;

Communication System: GSM 850; Frequency: 836.6 MHz;Duty Cycle: 1:2
Medium: Muscle 900 MHz Medium parameters used: f = 837 MHz; σ = 0.976 mho/m; ε_r = 53.8; ρ = 1000 kg/m^3
Phantom section: Flat Section

DASY4 Configuration:

- Probe: ES3DV3 - SN3172; ConvF(5.84, 5.84, 5.84); Calibrated: 2010/5/21
- Sensor-Surface: 4mm (Mechanical Surface Detection)
- Electronics: DAE4 Sn547; Calibrated: 2010/8/18
- Phantom: SAM1; Type: SAM 4.0; Serial: TP:1419
- Measurement SW: DASY4, V4.7 Build 80; Postprocessing SW: SEMCAD, V1.8 Build 186

body/Area Scan (91x151x1): Measurement grid: dx=15mm, dy=15mm
Maximum value of SAR (interpolated) = 1.29 mW/g

body/Zoom Scan (5x5x7)/Cube 0: Measurement grid: dx=8mm, dy=8mm, dz=5mm
Reference Value = 11.3 V/m; Power Drift = 0.053 dB
Peak SAR (extrapolated) = 1.88 W/kg
SAR(1 g) = 1.22 mW/g; SAR(10 g) = 0.752 mW/g
Maximum value of SAR (measured) = 1.33 mW/g

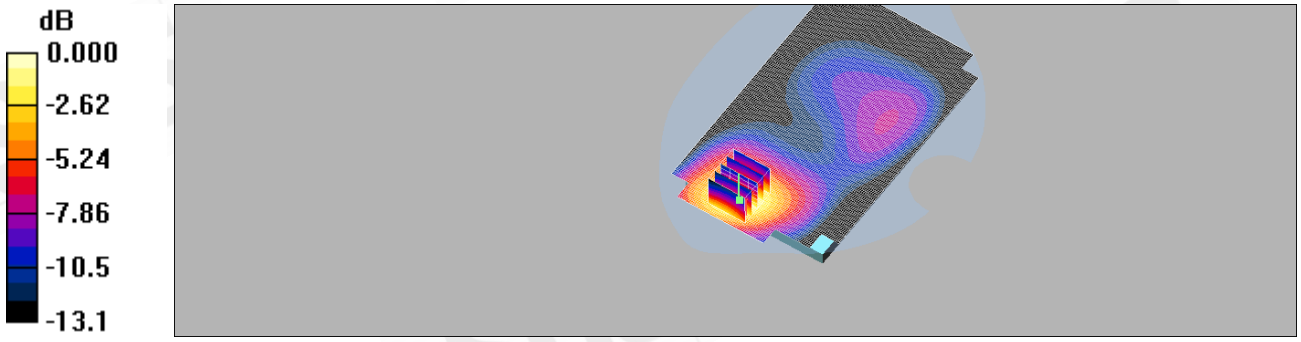

0 dB = 1.33mW/g

Unless otherwise stated the results shown in this test report refer only to the sample(s) tested and such sample(s) are retained for 90 days only.
除非另有說明，此報告結果僅對測試之樣品負責，同時此樣品僅保留90天。本報告未經本公司書面許可，不可部份複製。
This document is issued by the Company subject to its General Conditions of Service printed overleaf, available on request or accessible at www.sgs.com/terms_and_conditions.htm and, for electronic format documents, subject to Terms and Conditions for Electronic Documents at www.sgs.com/terms_e-document.htm. Attention is drawn to the limitation of liability, indemnification and jurisdiction issues defined therein. Any holder of this document is advised that information contained hereon reflects the Company's findings at the time of its intervention only and within the limits of Client's instructions, if any. The Company's sole responsibility is to its Client and this document does not exonerate parties to a transaction from exercising all their rights and obligations under the transaction documents. This document cannot be reproduced except in full, without prior written approval of the Company. Any unauthorized alteration, forgery or falsification of the content or appearance of this document is unlawful and offenders may be prosecuted to the fullest extent of the law.

Date: 2010/12/2

Lap-held mode_GPRS850_CH251_10mm

DUT: M02M;

Communication System: GSM 850; Frequency: 848.8 MHz;Duty Cycle: 1:2
Medium: Muscle 900 MHz Medium parameters used: f = 849 MHz; σ = 0.988 mho/m; ε_r = 53.7; ρ = 1000 kg/m^3
Phantom section: Flat Section

DASY4 Configuration:

- Probe: ES3DV3 - SN3172; ConvF(5.84, 5.84, 5.84); Calibrated: 2010/5/21
- Sensor-Surface: 4mm (Mechanical Surface Detection)
- Electronics: DAE4 Sn547; Calibrated: 2010/8/18
- Phantom: SAM1; Type: SAM 4.0; Serial: TP:1419
- Measurement SW: DASY4, V4.7 Build 80; Postprocessing SW: SEMCAD, V1.8 Build 186

body/Area Scan (91x151x1): Measurement grid: dx=15mm, dy=15mm
Maximum value of SAR (interpolated) = 1.37 mW/g

body/Zoom Scan (5x5x7)/Cube 0: Measurement grid: dx=8mm, dy=8mm, dz=5mm
Reference Value = 10.9 V/m; Power Drift = -0.166 dB
Peak SAR (extrapolated) = 2.02 W/kg
SAR(1 g) = 1.25 mW/g; SAR(10 g) = 0.783 mW/g
Maximum value of SAR (measured) = 1.40 mW/g

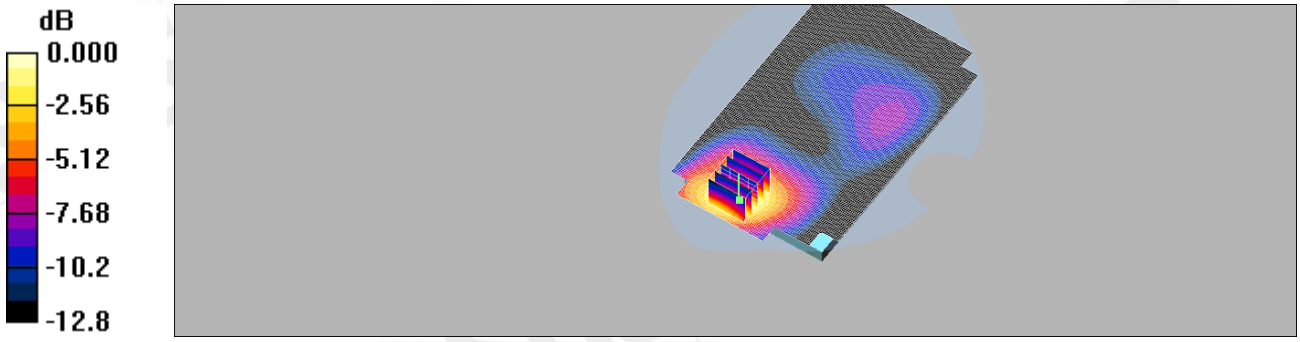

0 dB = 1.40mW/g

Unless otherwise stated the results shown in this test report refer only to the sample(s) tested and such sample(s) are retained for 90 days only.
除非另有說明，此報告結果僅對測試之樣品負責，同時此樣品僅保留90天。本報告未經本公司書面許可，不可部份複製。
This document is issued by the Company subject to its General Conditions of Service printed overleaf, available on request or accessible at www.sgs.com/terms_and_conditions.htm and, for electronic format documents, subject to Terms and Conditions for Electronic Documents at www.sgs.com/terms_e-document.htm. Attention is drawn to the limitation of liability, indemnification and jurisdiction issues defined therein. Any holder of this document is advised that information contained hereon reflects the Company's findings at the time of its intervention only and within the limits of Client's instructions, if any. The Company's sole responsibility is to its Client and this document does not exonerate parties to a transaction from exercising all their rights and obligations under the transaction documents. This document cannot be reproduced except in full, without prior written approval of the Company. Any unauthorized alteration, forgery or falsification of the content or appearance of this document is unlawful and offenders may be prosecuted to the fullest extent of the law.

Unless otherwise stated the results shown in this test report refer only to the sample(s) tested and such sample(s) are retained for 90 days only.
除非另有說明，此報告結果僅對測試之樣品負責，同時此樣品僅保留90天。本報告未經本公司書面許可，不可部份複製。
This document is issued by the Company subject to its General Conditions of Service printed overleaf, available on request or accessible at www.sgs.com/terms_and_conditions.htm and, for electronic format documents, subject to Terms and Conditions for Electronic Documents at www.sgs.com/terms_e-document.htm. Attention is drawn to the limitation of liability, indemnification and jurisdiction issues defined therein. Any holder of this document is advised that information contained hereon reflects the Company's findings at the time of its intervention only and within the limits of Client's instructions, if any. The Company's sole responsibility is to its Client and this document does not exonerate parties to a transaction from exercising all their rights and obligations under the transaction documents. This document cannot be reproduced except in full, without prior written approval of the Company. Any unauthorized alteration, forgery or falsification of the content or appearance of this document is unlawful and offenders may be prosecuted to the fullest extent of the law.

Lap-held mode_GPRS1900_CH512

DUT: M02M;

Communication System: GSM1900; Frequency: 1850.2 MHz;Duty Cycle: 1:2
Medium: M1800 & 1900 Medium parameters used (interpolated): f = 1850.2 MHz; σ = 1.58 mho/m; ε_r = 52.7; ρ = 1000 kg/m^3
Phantom section: Flat Section

DASY4 Configuration:

- Probe: ES3DV3 - SN3172; ConvF(4.45, 4.45, 4.45); Calibrated: 2010/5/21
- Sensor-Surface: 4mm (Mechanical Surface Detection)
- Electronics: DAE4 Sn547; Calibrated: 2010/8/18
- Phantom: SAM1; Type: SAM 4.0; Serial: TP:1419
- Measurement SW: DASY4, V4.7 Build 80; Postprocessing SW: SEMCAD, V1.8 Build 186

body/Area Scan (91x151x1): Measurement grid: dx=15mm, dy=15mm
Maximum value of SAR (interpolated) = 0.245 mW/g
body/Zoom Scan (5x5x7)/Cube 0: Measurement grid: dx=8mm, dy=8mm, dz=5mm
Reference Value = 1.71 V/m; Power Drift = 0.178 dB
Peak SAR (extrapolated) = 0.463 W/kg
SAR(1 g) = 0.250 mW/g; SAR(10 g) = 0.135 mW/g
Maximum value of SAR (measured) = 0.277 mW/g

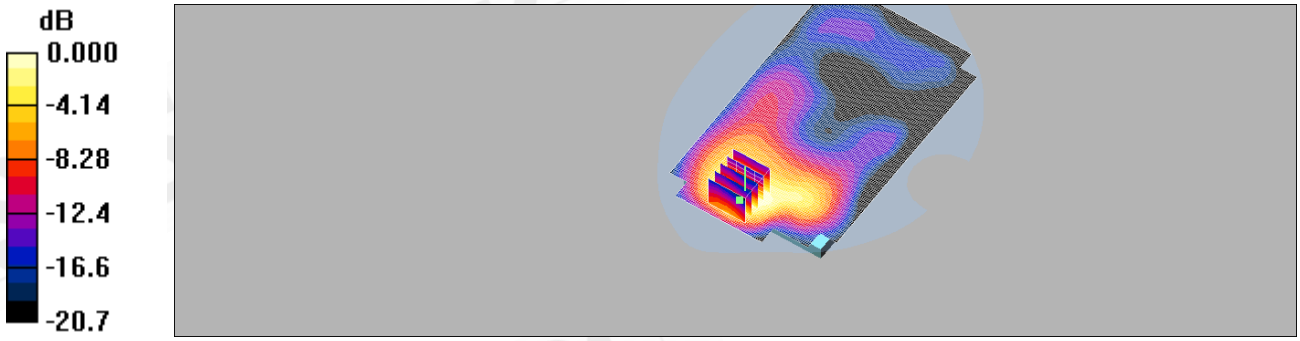

0 dB = 0.277mW/g

Unless otherwise stated the results shown in this test report refer only to the sample(s) tested and such sample(s) are retained for 90 days only.
除非另有說明，此報告結果僅對測試之樣品負責，同時此樣品僅保留90天。本報告未經本公司書面許可，不可部份複製。
This document is issued by the Company subject to its General Conditions of Service printed overleaf, available on request or accessible at www.sgs.com/terms_and_conditions.htm and, for electronic format documents, subject to Terms and Conditions for Electronic Documents at www.sgs.com/terms_e-document.htm. Attention is drawn to the limitation of liability, indemnification and jurisdiction issues defined therein. Any holder of this document is advised that information contained hereon reflects the Company's findings at the time of its intervention only and within the limits of Client's instructions, if any. The Company's sole responsibility is to its Client and this document does not exonerate parties to a transaction from exercising all their rights and obligations under the transaction documents. This document cannot be reproduced except in full, without prior written approval of the Company. Any unauthorized alteration, forgery or falsification of the content or appearance of this document is unlawful and offenders may be prosecuted to the fullest extent of the law.

Date: 2010/12/2

Secondary portrait mode_GPRS1900_CH512

DUT: M02M;

Communication System: GSM1900; Frequency: 1850.2 MHz;Duty Cycle: 1:2
Medium: M1800 & 1900 Medium parameters used (interpolated): f = 1850.2 MHz; σ = 1.58 mho/m; ε_r = 52.7; ρ = 1000 kg/m^3
Phantom section: Flat Section

DASY4 Configuration:

- Probe: ES3DV3 - SN3172; ConvF(4.45, 4.45, 4.45); Calibrated: 2010/5/21
- Sensor-Surface: 4mm (Mechanical Surface Detection)
- Electronics: DAE4 Sn547; Calibrated: 2010/8/18
- Phantom: SAM1; Type: SAM 4.0; Serial: TP:1419
- Measurement SW: DASY4, V4.7 Build 80; Postprocessing SW: SEMCAD, V1.8 Build 186

body/Area Scan (41x101x1): Measurement grid: dx=15mm, dy=15mm
Maximum value of SAR (interpolated) = 0.029 mW/g

body/Zoom Scan (5x5x7)/Cube 0: Measurement grid: dx=8mm, dy=8mm, dz=5mm
Reference Value = 2.42 V/m; Power Drift = 0.117 dB
Peak SAR (extrapolated) = 0.040 W/kg
SAR(1 g) = 0.026 mW/g; SAR(10 g) = 0.016 mW/g
Maximum value of SAR (measured) = 0.028 mW/g

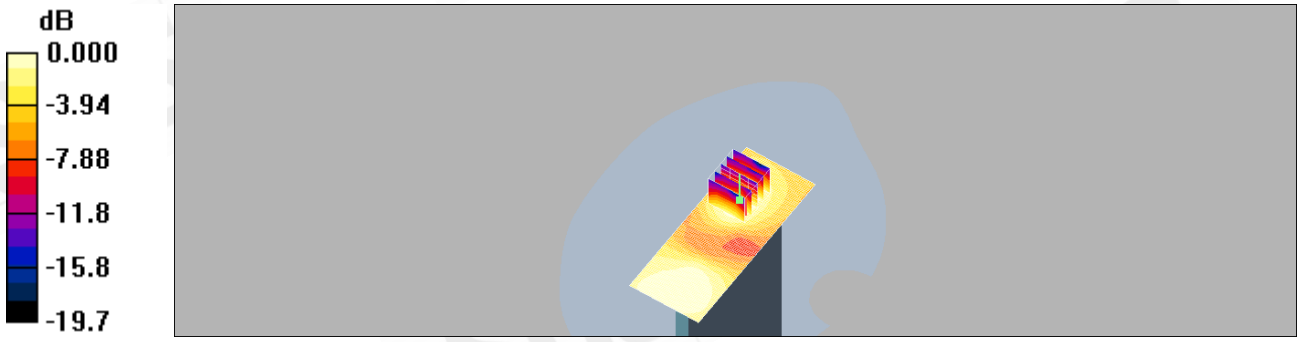

0 dB = 0.028mW/g

Unless otherwise stated the results shown in this test report refer only to the sample(s) tested and such sample(s) are retained for 90 days only.
除非另有說明，此報告結果僅對測試之樣品負責，同時此樣品僅保留90天。本報告未經本公司書面許可，不可部份複製。
This document is issued by the Company subject to its General Conditions of Service printed overleaf, available on request or accessible at www.sgs.com/terms_and_conditions.htm and, for electronic format documents, subject to Terms and Conditions for Electronic Documents at www.sgs.com/terms_e-document.htm. Attention is drawn to the limitation of liability, indemnification and jurisdiction issues defined therein. Any holder of this document is advised that information contained hereon reflects the Company's findings at the time of its intervention only and within the limits of Client's instructions, if any. The Company's sole responsibility is to its Client and this document does not exonerate parties to a transaction from exercising all their rights and obligations under the transaction documents. This document cannot be reproduced except in full, without prior written approval of the Company. Any unauthorized alteration, forgery or falsification of the content or appearance of this document is unlawful and offenders may be prosecuted to the fullest extent of the law.

Date: 2010/12/2

Secondary landscape mode_GPRS1900_CH512

DUT: M02M;

Communication System: GSM1900; Frequency: 1850.2 MHz;Duty Cycle: 1:2
Medium: M1800 & 1900 Medium parameters used (interpolated): f = 1850.2 MHz; σ = 1.58 mho/m; ε_r = 52.7; ρ = 1000 kg/m^3
Phantom section: Flat Section

DASY4 Configuration:

- Probe: ES3DV3 - SN3172; ConvF(4.45, 4.45, 4.45); Calibrated: 2010/5/21
- Sensor-Surface: 4mm (Mechanical Surface Detection)
- Electronics: DAE4 Sn547; Calibrated: 2010/8/18
- Phantom: SAM1; Type: SAM 4.0; Serial: TP:1419
- Measurement SW: DASY4, V4.7 Build 80; Postprocessing SW: SEMCAD, V1.8 Build 186

body/Area Scan (41x141x1): Measurement grid: dx=15mm, dy=15mm
Maximum value of SAR (interpolated) = 0.062 mW/g

body/Zoom Scan (5x5x7)/Cube 0: Measurement grid: dx=8mm, dy=8mm, dz=5mm
Reference Value = 5.40 V/m; Power Drift = 0.043 dB
Peak SAR (extrapolated) = 0.085 W/kg
SAR(1 g) = 0.057 mW/g; SAR(10 g) = 0.037 mW/g
Maximum value of SAR (measured) = 0.062 mW/g

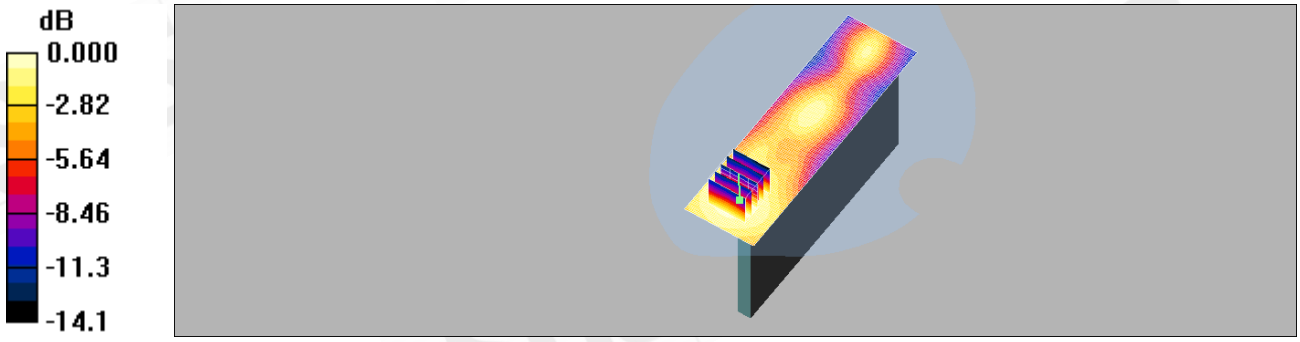

0 dB = 0.062mW/g

Unless otherwise stated the results shown in this test report refer only to the sample(s) tested and such sample(s) are retained for 90 days only.
除非另有說明，此報告結果僅對測試之樣品負責，同時此樣品僅保留90天。本報告未經本公司書面許可，不可部份複製。
This document is issued by the Company subject to its General Conditions of Service printed overleaf, available on request or accessible at www.sgs.com/terms_and_conditions.htm and, for electronic format documents, subject to Terms and Conditions for Electronic Documents at www.sgs.com/terms_e-document.htm. Attention is drawn to the limitation of liability, indemnification and jurisdiction issues defined therein. Any holder of this document is advised that information contained hereon reflects the Company's findings at the time of its intervention only and within the limits of Client's instructions, if any. The Company's sole responsibility is to its Client and this document does not exonerate parties to a transaction from exercising all their rights and obligations under the transaction documents. This document cannot be reproduced except in full, without prior written approval of the Company. Any unauthorized alteration, forgery or falsification of the content or appearance of this document is unlawful and offenders may be prosecuted to the fullest extent of the law.

Date: 2010/12/2

Primary Landscape mode_GPRS1900_CH512

DUT: M02M;

Communication System: GSM1900; Frequency: 1850.2 MHz;Duty Cycle: 1:2
Medium: M1800 & 1900 Medium parameters used (interpolated): f = 1850.2 MHz; σ = 1.58 mho/m; ε_r = 52.7; ρ = 1000 kg/m^3
Phantom section: Flat Section

DASY4 Configuration:

- Probe: ES3DV3 - SN3172; ConvF(4.45, 4.45, 4.45); Calibrated: 2010/5/21
- Sensor-Surface: 4mm (Mechanical Surface Detection)
- Electronics: DAE4 Sn547; Calibrated: 2010/8/18
- Phantom: SAM1; Type: SAM 4.0; Serial: TP:1419
- Measurement SW: DASY4, V4.7 Build 80; Postprocessing SW: SEMCAD, V1.8 Build 186

body/Area Scan (41x161x1): Measurement grid: dx=15mm, dy=15mm
Maximum value of SAR (interpolated) = 0.166 mW/g
body/Zoom Scan (5x5x7)/Cube 0: Measurement grid: dx=8mm, dy=8mm, dz=5mm
Reference Value = 6.48 V/m; Power Drift = -0.130 dB
Peak SAR (extrapolated) = 0.242 W/kg
SAR(1 g) = 0.150 mW/g; SAR(10 g) = 0.088 mW/g
Maximum value of SAR (measured) = 0.166 mW/g
body/Zoom Scan (5x5x7)/Cube 1: Measurement grid: dx=8mm, dy=8mm, dz=5mm
Reference Value = 6.48 V/m; Power Drift = -0.130 dB
Peak SAR (extrapolated) = 0.186 W/kg
SAR(1 g) = 0.121 mW/g; SAR(10 g) = 0.077 mW/g
Maximum value of SAR (measured) = 0.131 mW/g
body/Zoom Scan (5x5x7)/Cube 2: Measurement grid: dx=8mm, dy=8mm, dz=5mm
Reference Value = 6.48 V/m; Power Drift = -0.130 dB
Peak SAR (extrapolated) = 0.161 W/kg
SAR(1 g) = 0.102 mW/g; SAR(10 g) = 0.059 mW/g
Maximum value of SAR (measured) = 0.113 mW/g

Unless otherwise stated the results shown in this test report refer only to the sample(s) tested and such sample(s) are retained for 90 days only.
除非另有說明，此報告結果僅對測試之樣品負責，同時此樣品僅保留90天。本報告未經本公司書面許可，不可部份複製。
This document is issued by the Company subject to its General Conditions of Service printed overleaf, available on request or accessible at www.sgs.com/terms_and_conditions.htm and, for electronic format documents, subject to Terms and Conditions for Electronic Documents at www.sgs.com/terms_e-document.htm. Attention is drawn to the limitation of liability, indemnification and jurisdiction issues defined therein. Any holder of this document is advised that information contained hereon reflects the Company's findings at the time of its intervention only and within the limits of Client's instructions, if any. The Company's sole responsibility is to its Client and this document does not exonerate parties to a transaction from exercising all their rights and obligations under the transaction documents. This document cannot be reproduced except in full, without prior written approval of the Company. Any unauthorized alteration, forgery or falsification of the content or appearance of this document is unlawful and offenders may be prosecuted to the fullest extent of the law.

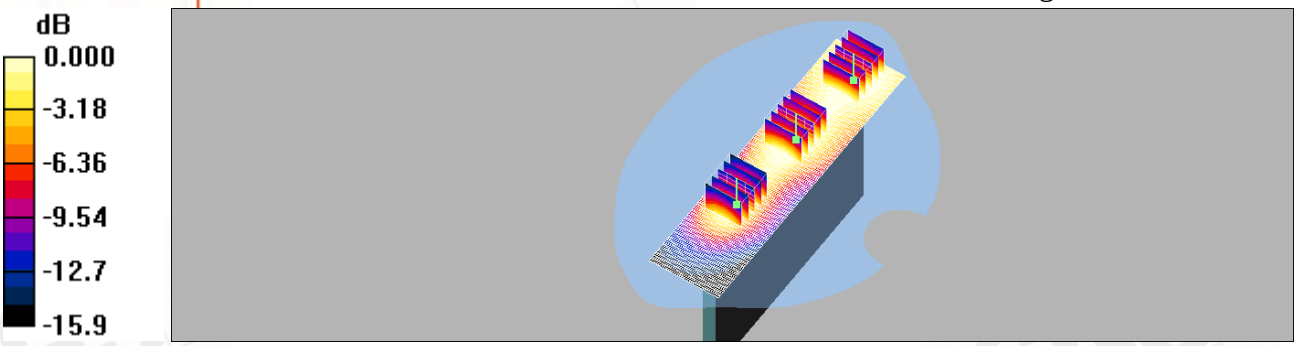

0 dB = 0.113mW/g

Unless otherwise stated the results shown in this test report refer only to the sample(s) tested and such sample(s) are retained for 90 days only.
除非另有說明，此報告結果僅對測試之樣品負責，同時此樣品僅保留90天。本報告未經本公司書面許可，不可部份複製。

This document is issued by the Company subject to its General Conditions of Service printed overleaf, available on request or accessible at www.sgs.com/terms_and_conditions.htm and, for electronic format documents, subject to Terms and Conditions for Electronic Documents at www.sgs.com/terms_e-document.htm. Attention is drawn to the limitation of liability, indemnification and jurisdiction issues defined therein. Any holder of this document is advised that information contained hereon reflects the Company's findings at the time of its intervention only and within the limits of Client's instructions, if any. The Company's sole responsibility is to its Client and this document does not exonerate parties to a transaction from exercising all their rights and obligations under the transaction documents. This document cannot be reproduced except in full, without prior written approval of the Company. Any unauthorized alteration, forgery or falsification of the content or appearance of this document is unlawful and offenders may be prosecuted to the fullest extent of the law.

Date: 2010/12/2

Lap-held mode_GPRS1900_CH512_10mm

DUT: M02M;

Communication System: GSM1900; Frequency: 1850.2 MHz;Duty Cycle: 1:2
Medium: M1800 & 1900 Medium parameters used (interpolated): f = 1850.2 MHz; σ = 1.58 mho/m; ε_r = 52.7; ρ = 1000 kg/m^3
Phantom section: Flat Section

DASY4 Configuration:

- Probe: ES3DV3 - SN3172; ConvF(4.45, 4.45, 4.45); Calibrated: 2010/5/21
- Sensor-Surface: 4mm (Mechanical Surface Detection)
- Electronics: DAE4 Sn547; Calibrated: 2010/8/18
- Phantom: SAM1; Type: SAM 4.0; Serial: TP:1419
- Measurement SW: DASY4, V4.7 Build 80; Postprocessing SW: SEMCAD, V1.8 Build 186

body/Area Scan (91x151x1): Measurement grid: dx=15mm, dy=15mm
Maximum value of SAR (interpolated) = 0.577 mW/g

body/Zoom Scan (5x5x7)/Cube 0: Measurement grid: dx=8mm, dy=8mm, dz=5mm
Reference Value = 4.14 V/m; Power Drift = 0.112 dB
Peak SAR (extrapolated) = 0.929 W/kg
SAR(1 g) = 0.562 mW/g; SAR(10 g) = 0.337 mW/g
Maximum value of SAR (measured) = 0.608 mW/g

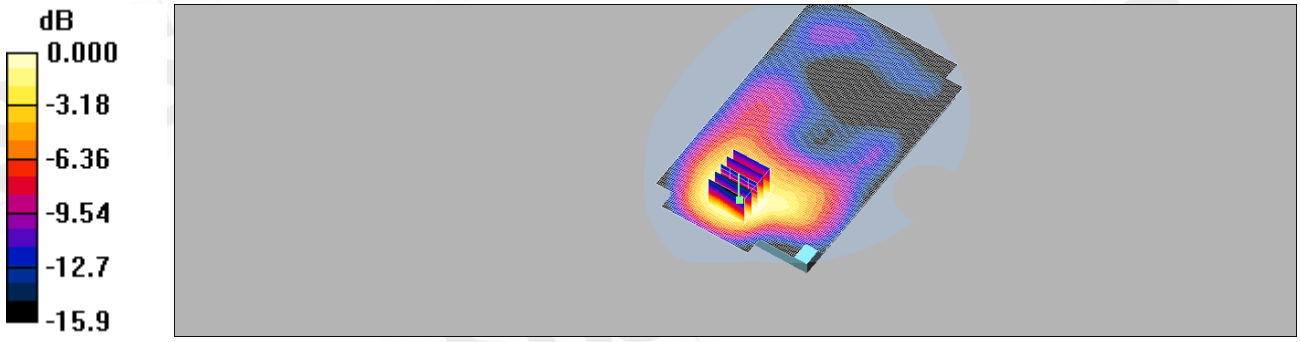

0 dB = 0.608mW/g

Unless otherwise stated the results shown in this test report refer only to the sample(s) tested and such sample(s) are retained for 90 days only.
除非另有說明，此報告結果僅對測試之樣品負責，同時此樣品僅保留90天。本報告未經本公司書面許可，不可部份複製。
This document is issued by the Company subject to its General Conditions of Service printed overleaf, available on request or accessible at www.sgs.com/terms_and_conditions.htm and, for electronic format documents, subject to Terms and Conditions for Electronic Documents at www.sgs.com/terms_e-document.htm. Attention is drawn to the limitation of liability, indemnification and jurisdiction issues defined therein. Any holder of this document is advised that information contained hereon reflects the Company's findings at the time of its intervention only and within the limits of Client's instructions, if any. The Company's sole responsibility is to its Client and this document does not exonerate parties to a transaction from exercising all their rights and obligations under the transaction documents. This document cannot be reproduced except in full, without prior written approval of the Company. Any unauthorized alteration, forgery or falsification of the content or appearance of this document is unlawful and offenders may be prosecuted to the fullest extent of the law.

Date: 2010/12/2

Lap-held mode_WCDMA B2_CH9400

DUT: M02M;

Communication System: WCDMA BAND2; Frequency: 1852.4 MHz;Duty Cycle: 1:1
Medium: M1800 & 1900 Medium parameters used (interpolated): f = 1852.4 MHz; σ = 1.59 mho/m; ε_r = 52.7; ρ = 1000 kg/m^3
Phantom section: Flat Section

DASY4 Configuration:

- Probe: ES3DV3 - SN3172; ConvF(4.45, 4.45, 4.45); Calibrated: 2010/5/21
- Sensor-Surface: 4mm (Mechanical Surface Detection)
- Electronics: DAE4 Sn547; Calibrated: 2010/8/18
- Phantom: SAM1; Type: SAM 4.0; Serial: TP:1419
- Measurement SW: DASY4, V4.7 Build 80; Postprocessing SW: SEMCAD, V1.8 Build 186

body/Area Scan (91x151x1): Measurement grid: dx=15mm, dy=15mm
Maximum value of SAR (interpolated) = 0.325 mW/g

body/Zoom Scan (5x5x7)/Cube 0: Measurement grid: dx=8mm, dy=8mm, dz=5mm
Reference Value = 1.96 V/m; Power Drift = 0.147 dB
Peak SAR (extrapolated) = 0.561 W/kg
SAR(1 g) = 0.312 mW/g; SAR(10 g) = 0.173 mW/g
Maximum value of SAR (measured) = 0.323 mW/g

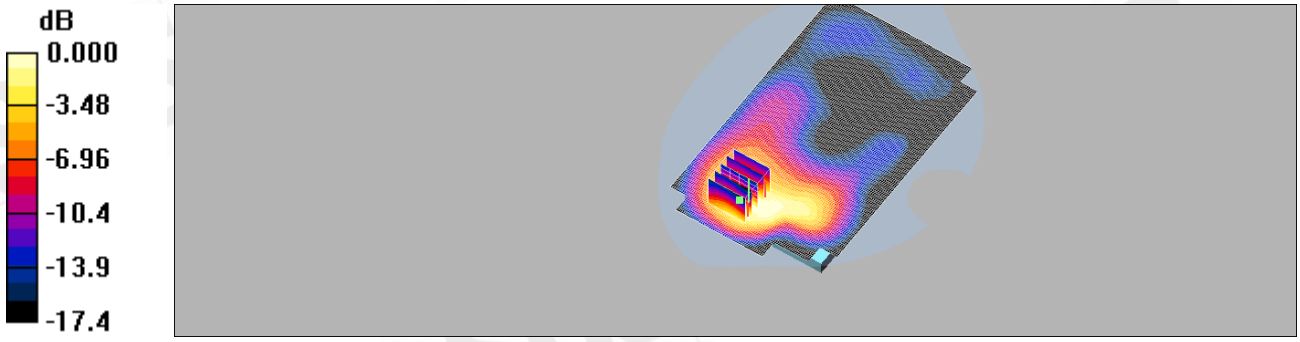

0 dB = 0.323mW/g

Unless otherwise stated the results shown in this test report refer only to the sample(s) tested and such sample(s) are retained for 90 days only.
除非另有說明，此報告結果僅對測試之樣品負責，同時此樣品僅保留90天。本報告未經本公司書面許可，不可部份複製。
This document is issued by the Company subject to its General Conditions of Service printed overleaf, available on request or accessible at www.sgs.com/terms_and_conditions.htm and, for electronic format documents, subject to Terms and Conditions for Electronic Documents at www.sgs.com/terms_e-document.htm. Attention is drawn to the limitation of liability, indemnification and jurisdiction issues defined therein. Any holder of this document is advised that information contained hereon reflects the Company's findings at the time of its intervention only and within the limits of Client's instructions, if any. The Company's sole responsibility is to its Client and this document does not exonerate parties to a transaction from exercising all their rights and obligations under the transaction documents. This document cannot be reproduced except in full, without prior written approval of the Company. Any unauthorized alteration, forgery or falsification of the content or appearance of this document is unlawful and offenders may be prosecuted to the fullest extent of the law.

Date: 2010/12/2

Secondary portrait mode_WCDMA B2_CH9262

DUT: M02M;

Communication System: WCDMA BAND2; Frequency: 1852.4 MHz;Duty Cycle: 1:1
Medium: M1800 & 1900 Medium parameters used (interpolated): f = 1852.4 MHz; σ = 1.59 mho/m; ε_r = 52.7; ρ = 1000 kg/m^3
Phantom section: Flat Section

DASY4 Configuration:

- Probe: ES3DV3 - SN3172; ConvF(4.45, 4.45, 4.45); Calibrated: 2010/5/21
- Sensor-Surface: 4mm (Mechanical Surface Detection)
- Electronics: DAE4 Sn547; Calibrated: 2010/8/18
- Phantom: SAM1; Type: SAM 4.0; Serial: TP:1419
- Measurement SW: DASY4, V4.7 Build 80; Postprocessing SW: SEMCAD, V1.8 Build 186

body/Area Scan (41x101x1): Measurement grid: dx=15mm, dy=15mm
Maximum value of SAR (interpolated) = 0.036 mW/g

body/Zoom Scan (5x5x7)/Cube 0: Measurement grid: dx=8mm, dy=8mm, dz=5mm
Reference Value = 3.28 V/m; Power Drift = 0.163 dB
Peak SAR (extrapolated) = 0.048 W/kg
SAR(1 g) = 0.032 mW/g; SAR(10 g) = 0.020 mW/g
Maximum value of SAR (measured) = 0.034 mW/g

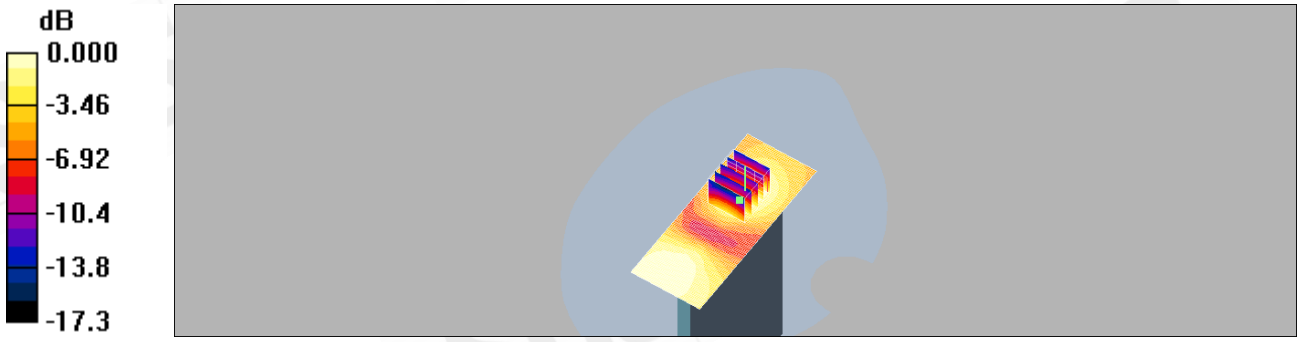

0 dB = 0.034mW/g

Unless otherwise stated the results shown in this test report refer only to the sample(s) tested and such sample(s) are retained for 90 days only.
除非另有說明，此報告結果僅對測試之樣品負責，同時此樣品僅保留90天。本報告未經本公司書面許可，不可部份複製。
This document is issued by the Company subject to its General Conditions of Service printed overleaf, available on request or accessible at www.sgs.com/terms_and_conditions.htm and, for electronic format documents, subject to Terms and Conditions for Electronic Documents at www.sgs.com/terms_e-document.htm. Attention is drawn to the limitation of liability, indemnification and jurisdiction issues defined therein. Any holder of this document is advised that information contained hereon reflects the Company's findings at the time of its intervention only and within the limits of Client's instructions, if any. The Company's sole responsibility is to its Client and this document does not exonerate parties to a transaction from exercising all their rights and obligations under the transaction documents. This document cannot be reproduced except in full, without prior written approval of the Company. Any unauthorized alteration, forgery or falsification of the content or appearance of this document is unlawful and offenders may be prosecuted to the fullest extent of the law.

Date: 2010/12/2

Secondary landscape mode_WCDMA B2_CH9262

DUT: M02M;

Communication System: WCDMA BAND2; Frequency: 1852.4 MHz;Duty Cycle: 1:1
Medium: M1800 & 1900 Medium parameters used (interpolated): f = 1852.4 MHz; σ = 1.59 mho/m; ε_r = 52.7; ρ = 1000 kg/m^3

- Probe: ES3DV3 - SN3172; ConvF(4.45, 4.45, 4.45); Calibrated: 2010/5/21
- Sensor-Surface: 4mm (Mechanical Surface Detection)
- Electronics: DAE4 Sn547; Calibrated: 2010/8/18
- Phantom: SAM1; Type: SAM 4.0; Serial: TP:1419
- Measurement SW: DASY4, V4.7 Build 80; Postprocessing SW: SEMCAD, V1.8 Build 186

body/Area Scan (41x141x1): Measurement grid: dx=15mm, dy=15mm
Maximum value of SAR (interpolated) = 0.089 mW/g
body/Zoom Scan (5x5x7)/Cube 0: Measurement grid: dx=8mm, dy=8mm, dz=5mm
Reference Value = 6.62 V/m; Power Drift = 0.053 dB
Peak SAR (extrapolated) = 0.126 W/kg
SAR(1 g) = 0.084 mW/g; SAR(10 g) = 0.054 mW/g
Maximum value of SAR (measured) = 0.090 mW/g
body/Zoom Scan (5x5x7)/Cube 1: Measurement grid: dx=8mm, dy=8mm, dz=5mm
Reference Value = 6.62 V/m; Power Drift = 0.053 dB
Peak SAR (extrapolated) = 0.088 W/kg
SAR(1 g) = 0.058 mW/g; SAR(10 g) = 0.035 mW/g
Maximum value of SAR (measured) = 0.063 mW/g

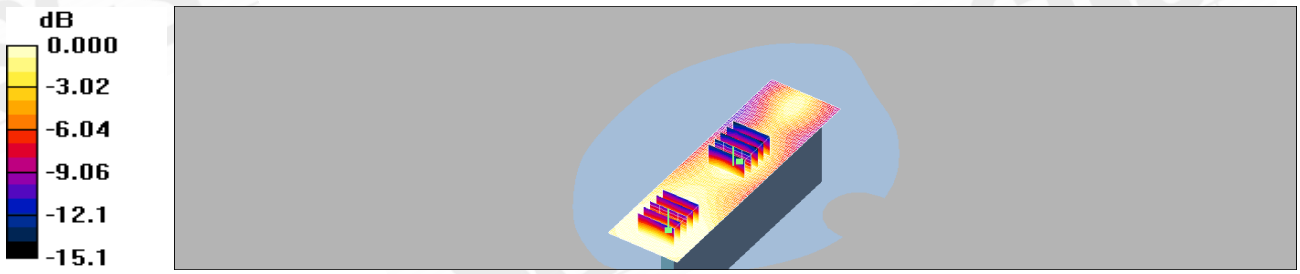

0 dB = 0.063mW/g

Unless otherwise stated the results shown in this test report refer only to the sample(s) tested and such sample(s) are retained for 90 days only.
除非另有說明，此報告結果僅對測試之樣品負責，同時此樣品僅保留90天。本報告未經本公司書面許可，不可部份複製。
This document is issued by the Company subject to its General Conditions of Service printed overleaf, available on request or accessible at www.sgs.com/terms_and_conditions.htm and, for electronic format documents, subject to Terms and Conditions for Electronic Documents at www.sgs.com/terms_e-document.htm. Attention is drawn to the limitation of liability, indemnification and jurisdiction issues defined therein. Any holder of this document is advised that information contained hereon reflects the Company's findings at the time of its intervention only and within the limits of Client's instructions, if any. The Company's sole responsibility is to its Client and this document does not exonerate parties to a transaction from exercising all their rights and obligations under the transaction documents. This document cannot be reproduced except in full, without prior written approval of the Company. Any unauthorized alteration, forgery or falsification of the content or appearance of this document is unlawful and offenders may be prosecuted to the fullest extent of the law.

Primary Landscape mode_WCDMA B2_CH9262

DUT: M02M;

Communication System: WCDMA BAND2; Frequency: 1852.4 MHz;Duty Cycle: 1:1
Medium: M1800 & 1900 Medium parameters used (interpolated): f = 1852.4 MHz; σ = 1.59 mho/m; ε_r = 52.7; ρ = 1000 kg/m^3
Phantom section: Flat Section

DASY4 Configuration:

- Probe: ES3DV3 - SN3172; ConvF(4.45, 4.45, 4.45); Calibrated: 2010/5/21
- Sensor-Surface: 4mm (Mechanical Surface Detection)
- Electronics: DAE4 Sn547; Calibrated: 2010/8/18
- Phantom: SAM1; Type: SAM 4.0; Serial: TP:1419
- Measurement SW: DASY4, V4.7 Build 80; Postprocessing SW: SEMCAD, V1.8 Build 186

body/Area Scan (41x151x1): Measurement grid: dx=15mm, dy=15mm
Maximum value of SAR (interpolated) = 0.226 mW/g
body/Zoom Scan (5x5x7)/Cube 0: Measurement grid: dx=8mm, dy=8mm, dz=5mm
Reference Value = 10.7 V/m; Power Drift = -0.033 dB
Peak SAR (extrapolated) = 0.334 W/kg
SAR(1 g) = 0.205 mW/g; SAR(10 g) = 0.120 mW/g
Maximum value of SAR (measured) = 0.221 mW/g
body/Zoom Scan (5x5x7)/Cube 1: Measurement grid: dx=8mm, dy=8mm, dz=5mm
Reference Value = 10.7 V/m; Power Drift = -0.033 dB
Peak SAR (extrapolated) = 0.254 W/kg
SAR(1 g) = 0.162 mW/g; SAR(10 g) = 0.104 mW/g
Maximum value of SAR (measured) = 0.172 mW/g
body/Zoom Scan (5x5x7)/Cube 2: Measurement grid: dx=8mm, dy=8mm, dz=5mm
Reference Value = 10.7 V/m; Power Drift = -0.033 dB
Peak SAR (extrapolated) = 0.208 W/kg
SAR(1 g) = 0.129 mW/g; SAR(10 g) = 0.075 mW/g
Maximum value of SAR (measured) = 0.142 mW/g

Unless otherwise stated the results shown in this test report refer only to the sample(s) tested and such sample(s) are retained for 90 days only.
除非另有說明，此報告結果僅對測試之樣品負責，同時此樣品僅保留90天。本報告未經本公司書面許可，不可部份複製。
This document is issued by the Company subject to its General Conditions of Service printed overleaf, available on request or accessible at www.sgs.com/terms_and_conditions.htm and, for electronic format documents, subject to Terms and Conditions for Electronic Documents at www.sgs.com/terms_e-document.htm. Attention is drawn to the limitation of liability, indemnification and jurisdiction issues defined therein. Any holder of this document is advised that information contained hereon reflects the Company's findings at the time of its intervention only and within the limits of Client's instructions, if any. The Company's sole responsibility is to its Client and this document does not exonerate parties to a transaction from exercising all their rights and obligations under the transaction documents. This document cannot be reproduced except in full, without prior written approval of the Company. Any unauthorized alteration, forgery or falsification of the content or appearance of this document is unlawful and offenders may be prosecuted to the fullest extent of the law.

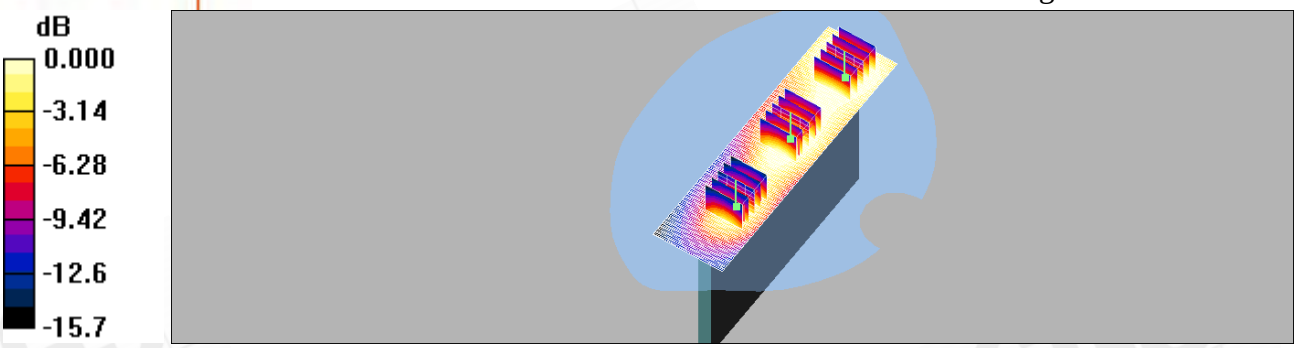

0 dB = 0.142mW/g

Unless otherwise stated the results shown in this test report refer only to the sample(s) tested and such sample(s) are retained for 90 days only.
除非另有說明，此報告結果僅對測試之樣品負責，同時此樣品僅保留90天。本報告未經本公司書面許可，不可部份複製。

This document is issued by the Company subject to its General Conditions of Service printed overleaf, available on request or accessible at www.sgs.com/terms_and_conditions.htm and, for electronic format documents, subject to Terms and Conditions for Electronic Documents at www.sgs.com/terms_e-document.htm. Attention is drawn to the limitation of liability, indemnification and jurisdiction issues defined therein. Any holder of this document is advised that information contained hereon reflects the Company's findings at the time of its intervention only and within the limits of Client's instructions, if any. The Company's sole responsibility is to its Client and this document does not exonerate parties to a transaction from exercising all their rights and obligations under the transaction documents. This document cannot be reproduced except in full, without prior written approval of the Company. Any unauthorized alteration, forgery or falsification of the content or appearance of this document is unlawful and offenders may be prosecuted to the fullest extent of the law.

Date: 2010/12/2

Lap-held mode_WCDMA B2_CH9262_10mm

DUT: M02M;

Communication System: WCDMA BAND2; Frequency: 1852.4 MHz;Duty Cycle: 1:1
Medium: M1800 & 1900 Medium parameters used (interpolated): f = 1852.4 MHz; σ = 1.59 mho/m; ε_r = 52.7; ρ = 1000 kg/m^3
Phantom section: Flat Section

DASY4 Configuration:

- Probe: ES3DV3 - SN3172; ConvF(4.45, 4.45, 4.45); Calibrated: 2010/5/21
- Sensor-Surface: 4mm (Mechanical Surface Detection)
- Electronics: DAE4 Sn547; Calibrated: 2010/8/18
- Phantom: SAM1; Type: SAM 4.0; Serial: TP:1419
- Measurement SW: DASY4, V4.7 Build 80; Postprocessing SW: SEMCAD, V1.8 Build 186

body/Area Scan (91x151x1): Measurement grid: dx=15mm, dy=15mm
Maximum value of SAR (interpolated) = 0.887 mW/g

body/Zoom Scan (5x5x7)/Cube 0: Measurement grid: dx=8mm, dy=8mm, dz=5mm
Reference Value = 4.50 V/m; Power Drift = 0.171 dB
Peak SAR (extrapolated) = 1.31 W/kg
SAR(1 g) = 0.795 mW/g; SAR(10 g) = 0.479 mW/g
Maximum value of SAR (measured) = 0.879 mW/g

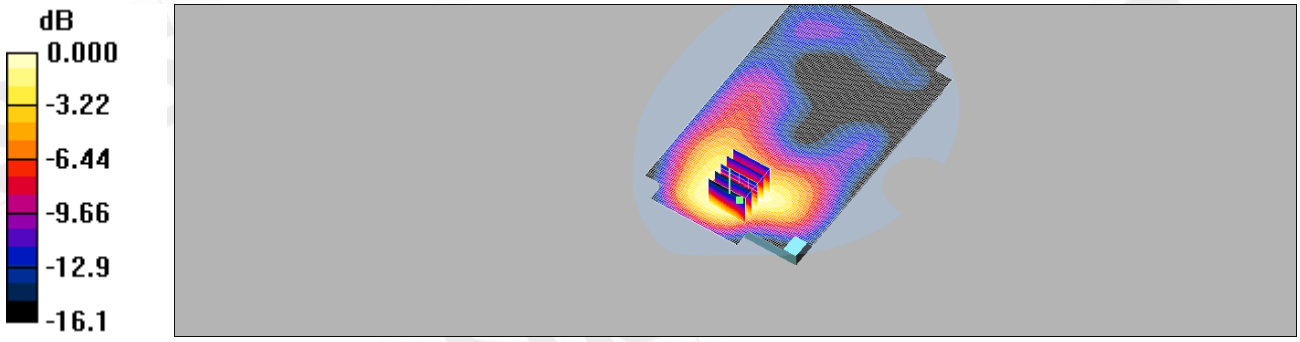

0 dB = 0.879mW/g

Unless otherwise stated the results shown in this test report refer only to the sample(s) tested and such sample(s) are retained for 90 days only.
除非另有說明，此報告結果僅對測試之樣品負責，同時此樣品僅保留90天。本報告未經本公司書面許可，不可部份複製。
This document is issued by the Company subject to its General Conditions of Service printed overleaf, available on request or accessible at www.sgs.com/terms_and_conditions.htm and, for electronic format documents, subject to Terms and Conditions for Electronic Documents at www.sgs.com/terms_e-document.htm. Attention is drawn to the limitation of liability, indemnification and jurisdiction issues defined therein. Any holder of this document is advised that information contained hereon reflects the Company's findings at the time of its intervention only and within the limits of Client's instructions, if any. The Company's sole responsibility is to its Client and this document does not exonerate parties to a transaction from exercising all their rights and obligations under the transaction documents. This document cannot be reproduced except in full, without prior written approval of the Company. Any unauthorized alteration, forgery or falsification of the content or appearance of this document is unlawful and offenders may be prosecuted to the fullest extent of the law.

Date: 2010/12/2

Lap-held mode_WCDMA B4_CH1412

DUT: M02M;

Communication System: WCDMA BAND4; Frequency: 1732.4 MHz;Duty Cycle: 1:1
Medium: M1800 & 1900 Medium parameters used (interpolated): f = 1732.4 MHz; σ = 1.46 mho/m; ε_r = 53.2; ρ = 1000 kg/m^3
Phantom section: Flat Section

DASY4 Configuration:

- Probe: ES3DV3 - SN3172; ConvF(4.63, 4.63, 4.63); Calibrated: 2010/5/21
- Sensor-Surface: 4mm (Mechanical Surface Detection)
- Electronics: DAE4 Sn547; Calibrated: 2010/8/18
- Phantom: SAM1; Type: SAM 4.0; Serial: TP:1419
- Measurement SW: DASY4, V4.7 Build 80; Postprocessing SW: SEMCAD, V1.8 Build 186

body/Area Scan (91x151x1): Measurement grid: dx=15mm, dy=15mm
Maximum value of SAR (interpolated) = 0.344 mW/g

body/Zoom Scan (5x5x7)/Cube 0: Measurement grid: dx=8mm, dy=8mm, dz=5mm
Reference Value = 2.15 V/m; Power Drift = 0.194 dB
Peak SAR (extrapolated) = 0.600 W/kg
SAR(1 g) = 0.330 mW/g; SAR(10 g) = 0.179 mW/g
Maximum value of SAR (measured) = 0.363 mW/g

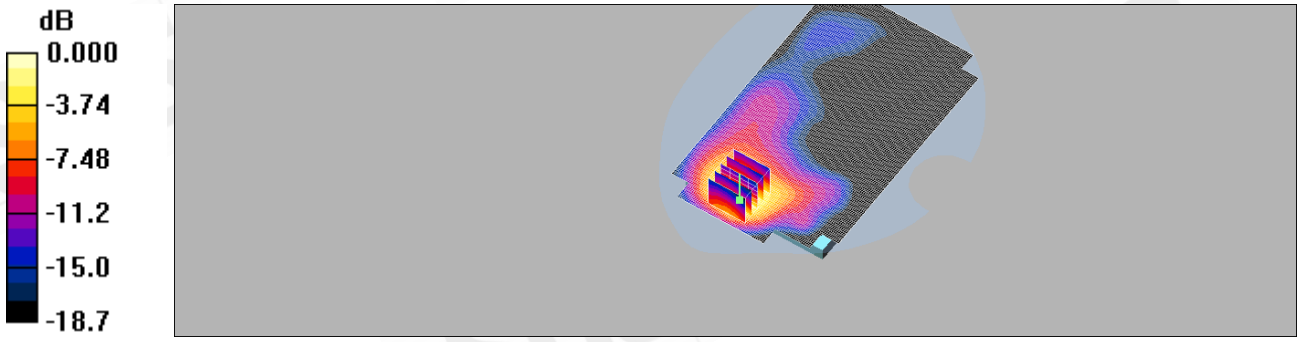

0 dB = 0.363mW/g

Unless otherwise stated the results shown in this test report refer only to the sample(s) tested and such sample(s) are retained for 90 days only.
除非另有說明，此報告結果僅對測試之樣品負責，同時此樣品僅保留90天。本報告未經本公司書面許可，不可部份複製。
This document is issued by the Company subject to its General Conditions of Service printed overleaf, available on request or accessible at www.sgs.com/terms_and_conditions.htm and, for electronic format documents, subject to Terms and Conditions for Electronic Documents at www.sgs.com/terms_e-document.htm. Attention is drawn to the limitation of liability, indemnification and jurisdiction issues defined therein. Any holder of this document is advised that information contained hereon reflects the Company's findings at the time of its intervention only and within the limits of Client's instructions, if any. The Company's sole responsibility is to its Client and this document does not exonerate parties to a transaction from exercising all their rights and obligations under the transaction documents. This document cannot be reproduced except in full, without prior written approval of the Company. Any unauthorized alteration, forgery or falsification of the content or appearance of this document is unlawful and offenders may be prosecuted to the fullest extent of the law.

Date: 2010/12/2

Secondary portrait mode_WCDMA B4_CH1412

DUT: M02M;

Communication System: WCDMA BAND4; Frequency: 1732.6 MHz;Duty Cycle: 1:1
Medium: M1800 & 1900 Medium parameters used: f = 1733 MHz; σ = 1.46 mho/m; ε_r = 53.2; ρ = 1000 kg/m^3
Phantom section: Flat Section

DASY4 Configuration:

- Probe: ES3DV3 - SN3172; ConvF(4.63, 4.63, 4.63); Calibrated: 2010/5/21
- Sensor-Surface: 4mm (Mechanical Surface Detection)
- Electronics: DAE4 Sn547; Calibrated: 2010/8/18
- Phantom: SAM1; Type: SAM 4.0; Serial: TP:1419
- Measurement SW: DASY4, V4.7 Build 80; Postprocessing SW: SEMCAD, V1.8 Build 186

body/Area Scan (41x101x1): Measurement grid: dx=15mm, dy=15mm
Maximum value of SAR (interpolated) = 0.021 mW/g

body/Zoom Scan (5x5x7)/Cube 0: Measurement grid: dx=8mm, dy=8mm, dz=5mm
Reference Value = 3.21 V/m; Power Drift = 0.135 dB
Peak SAR (extrapolated) = 0.030 W/kg
SAR(1 g) = 0.020 mW/g; SAR(10 g) = 0.012 mW/g
Maximum value of SAR (measured) = 0.021 mW/g

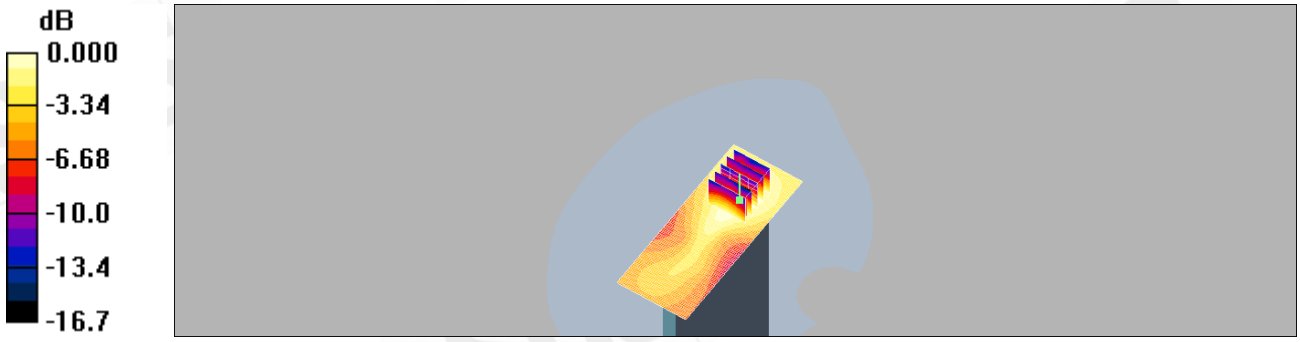

0 dB = 0.021mW/g

Unless otherwise stated the results shown in this test report refer only to the sample(s) tested and such sample(s) are retained for 90 days only.
除非另有說明，此報告結果僅對測試之樣品負責，同時此樣品僅保留90天。本報告未經本公司書面許可，不可部份複製。
This document is issued by the Company subject to its General Conditions of Service printed overleaf, available on request or accessible at www.sgs.com/terms_and_conditions.htm and, for electronic format documents, subject to Terms and Conditions for Electronic Documents at www.sgs.com/terms_e-document.htm. Attention is drawn to the limitation of liability, indemnification and jurisdiction issues defined therein. Any holder of this document is advised that information contained hereon reflects the Company's findings at the time of its intervention only and within the limits of Client's instructions, if any. The Company's sole responsibility is to its Client and this document does not exonerate parties to a transaction from exercising all their rights and obligations under the transaction documents. This document cannot be reproduced except in full, without prior written approval of the Company. Any unauthorized alteration, forgery or falsification of the content or appearance of this document is unlawful and offenders may be prosecuted to the fullest extent of the law.

Date: 2010/12/2

Secondary landscape mode_WCDMA B4_CH1412

DUT: M02M;

Communication System: WCDMA BAND4; Frequency: 1732.4 MHz;Duty Cycle: 1:1
Medium: M1800 & 1900 Medium parameters used (interpolated): f = 1732.4 MHz; σ = 1.46 mho/m; ε_r = 53.2; ρ = 1000 kg/m^3
Phantom section: Flat Section

DASY4 Configuration:

- Probe: ES3DV3 - SN3172; ConvF(4.63, 4.63, 4.63); Calibrated: 2010/5/21
- Sensor-Surface: 4mm (Mechanical Surface Detection)
- Electronics: DAE4 Sn547; Calibrated: 2010/8/18
- Phantom: SAM1; Type: SAM 4.0; Serial: TP:1419
- Measurement SW: DASY4, V4.7 Build 80; Postprocessing SW: SEMCAD, V1.8 Build 186

body/Area Scan (41x151x1): Measurement grid: dx=15mm, dy=15mm
Maximum value of SAR (interpolated) = 0.015 mW/g

body/Zoom Scan (5x5x7)/Cube 0: Measurement grid: dx=8mm, dy=8mm, dz=5mm
Reference Value = 1.47 V/m; Power Drift = 0.080 dB
Peak SAR (extrapolated) = 0.022 W/kg
SAR(1 g) = 0.014 mW/g; SAR(10 g) = 0.00925 mW/g
Maximum value of SAR (measured) = 0.015 mW/g

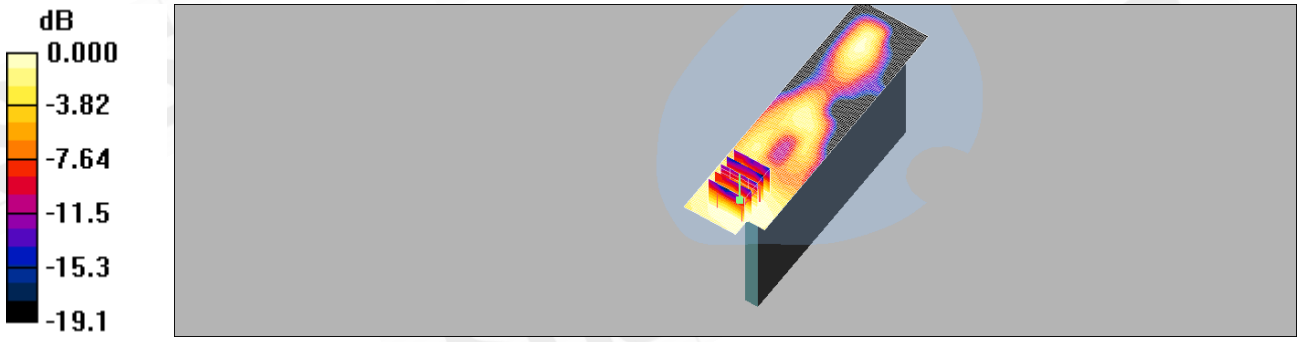

0 dB = 0.015mW/g

Unless otherwise stated the results shown in this test report refer only to the sample(s) tested and such sample(s) are retained for 90 days only.
除非另有說明，此報告結果僅對測試之樣品負責，同時此樣品僅保留90天。本報告未經本公司書面許可，不可部份複製。
This document is issued by the Company subject to its General Conditions of Service printed overleaf, available on request or accessible at www.sgs.com/terms_and_conditions.htm and, for electronic format documents, subject to Terms and Conditions for Electronic Documents at www.sgs.com/terms_e-document.htm. Attention is drawn to the limitation of liability, indemnification and jurisdiction issues defined therein. Any holder of this document is advised that information contained hereon reflects the Company's findings at the time of its intervention only and within the limits of Client's instructions, if any. The Company's sole responsibility is to its Client and this document does not exonerate parties to a transaction from exercising all their rights and obligations under the transaction documents. This document cannot be reproduced except in full, without prior written approval of the Company. Any unauthorized alteration, forgery or falsification of the content or appearance of this document is unlawful and offenders may be prosecuted to the fullest extent of the law.

Date: 2010/12/2

Primary Landscape mode_WCDMA B4_CH1412

DUT: M02M;

Communication System: WCDMA BAND4; Frequency: 1732.4 MHz;Duty Cycle: 1:1
Medium: M1800 & 1900 Medium parameters used (interpolated): f = 1732.4 MHz; σ = 1.46 mho/m; ε_r = 53.2; ρ = 1000 kg/m^3

- Probe: ES3DV3 - SN3172; ConvF(4.63, 4.63, 4.63); Calibrated: 2010/5/21
- Sensor-Surface: 4mm (Mechanical Surface Detection)
- Electronics: DAE4 Sn547; Calibrated: 2010/8/18
- Phantom: SAM1; Type: SAM 4.0; Serial: TP:1419
- Measurement SW: DASY4, V4.7 Build 80; Postprocessing SW: SEMCAD, V1.8 Build 186

body/Area Scan (41x141x1): Measurement grid: dx=15mm, dy=15mm
Maximum value of SAR (interpolated) = 0.164 mW/g
body/Zoom Scan (5x5x7)/Cube 0: Measurement grid: dx=8mm, dy=8mm, dz=5mm
Reference Value = 8.68 V/m; Power Drift = -0.1 dB
Peak SAR (extrapolated) = 0.232 W/kg
SAR(1 g) = 0.146 mW/g; SAR(10 g) = 0.089 mW/g
Maximum value of SAR (measured) = 0.158 mW/g
body/Zoom Scan (5x5x7)/Cube 1: Measurement grid: dx=8mm, dy=8mm, dz=5mm
Reference Value = 8.68 V/m; Power Drift = -0.1 dB
Peak SAR (extrapolated) = 0.126 W/kg
SAR(1 g) = 0.078 mW/g; SAR(10 g) = 0.046 mW/g
Maximum value of SAR (measured) = 0.085 mW/g

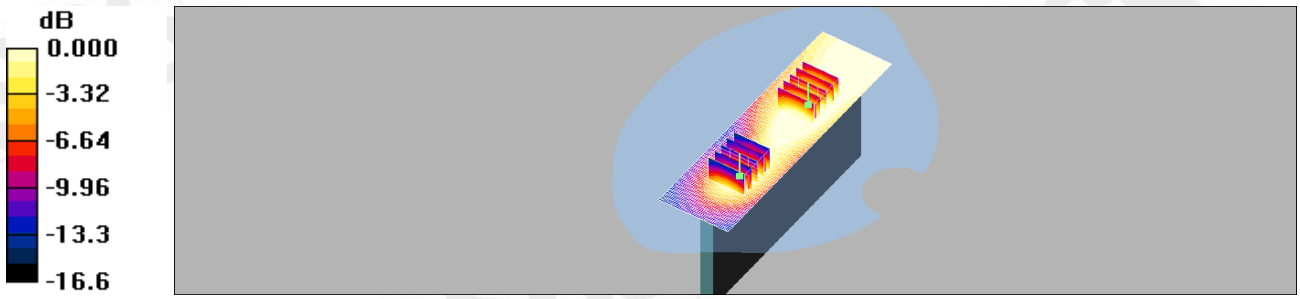

0 dB = 0.085mW/g

Unless otherwise stated the results shown in this test report refer only to the sample(s) tested and such sample(s) are retained for 90 days only.
除非另有說明，此報告結果僅對測試之樣品負責，同時此樣品僅保留90天。本報告未經本公司書面許可，不可部份複製。
This document is issued by the Company subject to its General Conditions of Service printed overleaf, available on request or accessible at www.sgs.com/terms_and_conditions.htm and, for electronic format documents, subject to Terms and Conditions for Electronic Documents at www.sgs.com/terms_e-document.htm. Attention is drawn to the limitation of liability, indemnification and jurisdiction issues defined therein. Any holder of this document is advised that information contained hereon reflects the Company's findings at the time of its intervention only and within the limits of Client's instructions, if any. The Company's sole responsibility is to its Client and this document does not exonerate parties to a transaction from exercising all their rights and obligations under the transaction documents. This document cannot be reproduced except in full, without prior written approval of the Company. Any unauthorized alteration, forgery or falsification of the content or appearance of this document is unlawful and offenders may be prosecuted to the fullest extent of the law.

Lap-held mode_WCDMA B4_CH1412_10mm

DUT: M02M;

Communication System: WCDMA BAND4; Frequency: 1732.4 MHz;Duty Cycle: 1:1
Medium: M1800 & 1900 Medium parameters used (interpolated): f = 1732.4 MHz; σ = 1.46 mho/m; ε_r = 53.2; ρ = 1000 kg/m^3
Phantom section: Flat Section

DASY4 Configuration:

- Probe: ES3DV3 - SN3172; ConvF(4.63, 4.63, 4.63); Calibrated: 2010/5/21
- Sensor-Surface: 4mm (Mechanical Surface Detection)
- Electronics: DAE4 Sn547; Calibrated: 2010/8/18
- Phantom: SAM1; Type: SAM 4.0; Serial: TP:1419
- Measurement SW: DASY4, V4.7 Build 80; Postprocessing SW: SEMCAD, V1.8 Build 186

body/Area Scan (91x151x1): Measurement grid: dx=15mm, dy=15mm
Maximum value of SAR (interpolated) = 0.758 mW/g

body/Zoom Scan (5x5x7)/Cube 0: Measurement grid: dx=8mm, dy=8mm, dz=5mm
Reference Value = 4.78 V/m; Power Drift = 0.175 dB
Peak SAR (extrapolated) = 1.20 W/kg
SAR(1 g) = 0.705 mW/g; SAR(10 g) = 0.414 mW/g
Maximum value of SAR (measured) = 0.775 mW/g

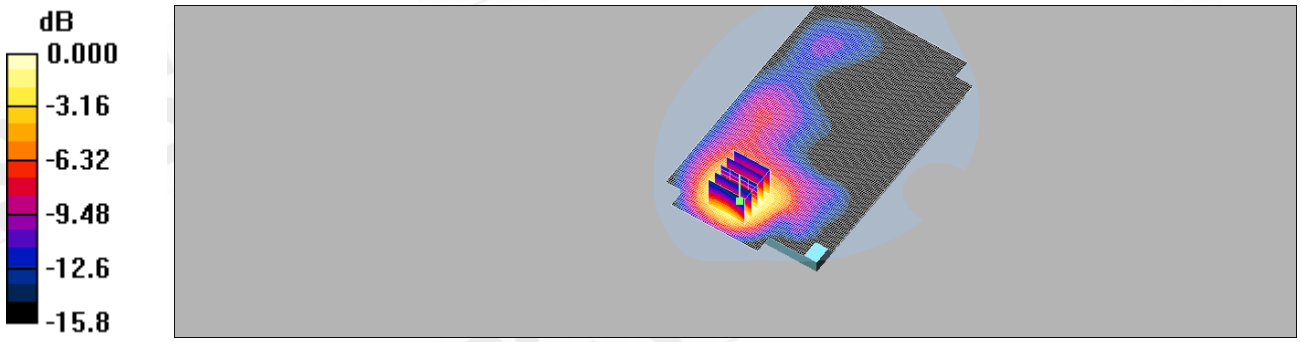

0 dB = 0.775mW/g

Unless otherwise stated the results shown in this test report refer only to the sample(s) tested and such sample(s) are retained for 90 days only.
除非另有說明，此報告結果僅對測試之樣品負責，同時此樣品僅保留90天。本報告未經本公司書面許可，不可部份複製。
This document is issued by the Company subject to its General Conditions of Service printed overleaf, available on request or accessible at www.sgs.com/terms_and_conditions.htm and, for electronic format documents, subject to Terms and Conditions for Electronic Documents at www.sgs.com/terms_e-document.htm. Attention is drawn to the limitation of liability, indemnification and jurisdiction issues defined therein. Any holder of this document is advised that information contained hereon reflects the Company's findings at the time of its intervention only and within the limits of Client's instructions, if any. The Company's sole responsibility is to its Client and this document does not exonerate parties to a transaction from exercising all their rights and obligations under the transaction documents. This document cannot be reproduced except in full, without prior written approval of the Company. Any unauthorized alteration, forgery or falsification of the content or appearance of this document is unlawful and offenders may be prosecuted to the fullest extent of the law.

Date: 2010/12/2

Lap-held mode_WCDMA B5_CH4132

DUT: M02M;

Communication System: WCDMA BAND5; Frequency: 826.4 MHz;Duty Cycle: 1:1
Medium: Muscle 900 MHz Medium parameters used (interpolated): f = 826.4 MHz; σ = 0.965 mho/m; ε_r = 53.9; ρ = 1000 kg/m^3
Phantom section: Flat Section

DASY4 Configuration:

- Probe: ES3DV3 - SN3172; ConvF(5.84, 5.84, 5.84); Calibrated: 2010/5/21
- Sensor-Surface: 4mm (Mechanical Surface Detection)
- Electronics: DAE4 Sn547; Calibrated: 2010/8/18
- Phantom: SAM1; Type: SAM 4.0; Serial: TP:1419
- Measurement SW: DASY4, V4.7 Build 80; Postprocessing SW: SEMCAD, V1.8 Build 186

body/Area Scan (91x151x1): Measurement grid: dx=15mm, dy=15mm
Maximum value of SAR (interpolated) = 0.489 mW/g

body/Zoom Scan (5x5x7)/Cube 0: Measurement grid: dx=8mm, dy=8mm, dz=5mm
Reference Value = 4.97 V/m; Power Drift = 0.049 dB
Peak SAR (extrapolated) = 0.763 W/kg
SAR(1 g) = 0.462 mW/g; SAR(10 g) = 0.275 mW/g
Maximum value of SAR (measured) = 0.501 mW/g

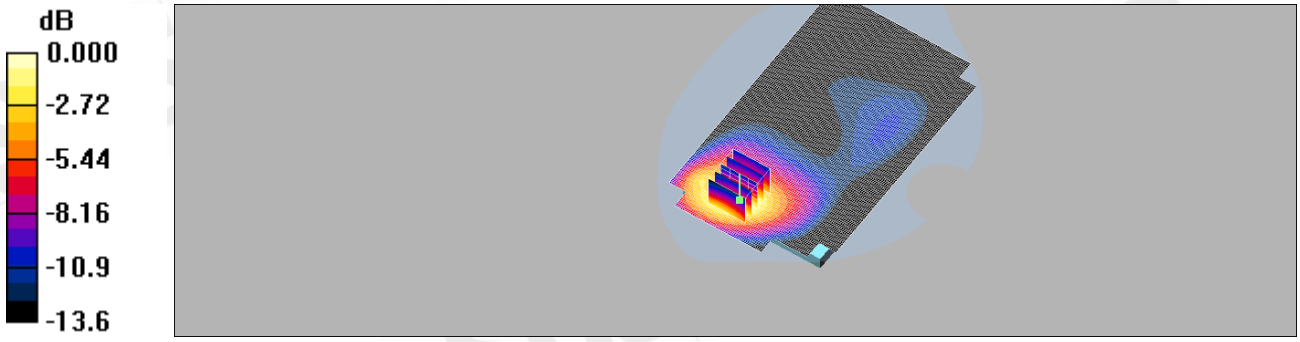

0 dB = 0.501mW/g

Unless otherwise stated the results shown in this test report refer only to the sample(s) tested and such sample(s) are retained for 90 days only.
除非另有說明，此報告結果僅對測試之樣品負責，同時此樣品僅保留90天。本報告未經本公司書面許可，不可部份複製。
This document is issued by the Company subject to its General Conditions of Service printed overleaf, available on request or accessible at www.sgs.com/terms_and_conditions.htm and, for electronic format documents, subject to Terms and Conditions for Electronic Documents at www.sgs.com/terms_e-document.htm. Attention is drawn to the limitation of liability, indemnification and jurisdiction issues defined therein. Any holder of this document is advised that information contained hereon reflects the Company's findings at the time of its intervention only and within the limits of Client's instructions, if any. The Company's sole responsibility is to its Client and this document does not exonerate parties to a transaction from exercising all their rights and obligations under the transaction documents. This document cannot be reproduced except in full, without prior written approval of the Company. Any unauthorized alteration, forgery or falsification of the content or appearance of this document is unlawful and offenders may be prosecuted to the fullest extent of the law.

Date: 2010/12/2

Secondary portrait mode_WCDMA B5_CH4132

DUT: M02M;

Communication System: WCDMA BAND5; Frequency: 826.4 MHz;Duty Cycle: 1:1
Medium: Muscle 900 MHz Medium parameters used (interpolated): f = 826.4 MHz; σ = 0.965 mho/m; ε_r = 53.9; ρ = 1000 kg/m^3
Phantom section: Flat Section

DASY4 Configuration:

- Probe: ES3DV3 - SN3172; ConvF(5.84, 5.84, 5.84); Calibrated: 2010/5/21
- Sensor-Surface: 4mm (Mechanical Surface Detection)
- Electronics: DAE4 Sn547; Calibrated: 2010/8/18
- Phantom: SAM1; Type: SAM 4.0; Serial: TP:1419
- Measurement SW: DASY4, V4.7 Build 80; Postprocessing SW: SEMCAD, V1.8 Build 186

body/Area Scan (41x101x1): Measurement grid: dx=15mm, dy=15mm
Maximum value of SAR (interpolated) = 0.109 mW/g

body/Zoom Scan (5x5x7)/Cube 0: Measurement grid: dx=8mm, dy=8mm, dz=5mm
Reference Value = 9.17 V/m; Power Drift = 0.004 dB
Peak SAR (extrapolated) = 0.139 W/kg
SAR(1 g) = 0.103 mW/g; SAR(10 g) = 0.074 mW/g
Maximum value of SAR (measured) = 0.110 mW/g

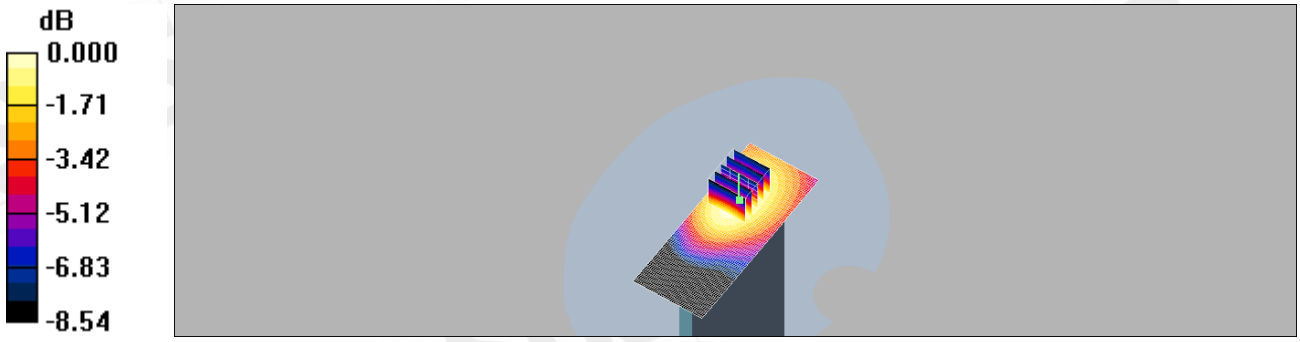

0 dB = 0.110mW/g

Unless otherwise stated the results shown in this test report refer only to the sample(s) tested and such sample(s) are retained for 90 days only.
除非另有說明，此報告結果僅對測試之樣品負責，同時此樣品僅保留90天。本報告未經本公司書面許可，不可部份複製。
This document is issued by the Company subject to its General Conditions of Service printed overleaf, available on request or accessible at www.sgs.com/terms_and_conditions.htm and, for electronic format documents, subject to Terms and Conditions for Electronic Documents at www.sgs.com/terms_e-document.htm. Attention is drawn to the limitation of liability, indemnification and jurisdiction issues defined therein. Any holder of this document is advised that information contained hereon reflects the Company's findings at the time of its intervention only and within the limits of Client's instructions, if any. The Company's sole responsibility is to its Client and this document does not exonerate parties to a transaction from exercising all their rights and obligations under the transaction documents. This document cannot be reproduced except in full, without prior written approval of the Company. Any unauthorized alteration, forgery or falsification of the content or appearance of this document is unlawful and offenders may be prosecuted to the fullest extent of the law.

DaDate: 2010/12/2

Secondary landscape mode_WCDMA B5_CH4132

DUT: M02M;

Communication System: WCDMA BAND5; Frequency: 826.4 MHz;Duty Cycle: 1:1
Medium: Muscle 900 MHz Medium parameters used (interpolated): f = 826.4 MHz; σ = 0.965 mho/m; ε_r = 53.9; ρ = 1000 kg/m^3
Phantom section: Flat Section

DASY4 Configuration:

- Probe: ES3DV3 - SN3172; ConvF(5.84, 5.84, 5.84); Calibrated: 2010/5/21
- Sensor-Surface: 4mm (Mechanical Surface Detection)
- Electronics: DAE4 Sn547; Calibrated: 2010/8/18
- Phantom: SAM1; Type: SAM 4.0; Serial: TP:1419
- Measurement SW: DASY4, V4.7 Build 80; Postprocessing SW: SEMCAD, V1.8 Build 186

body/Area Scan (41x131x1): Measurement grid: dx=15mm, dy=15mm
Maximum value of SAR (interpolated) = 0.184 mW/g

body/Zoom Scan (5x5x7)/Cube 0: Measurement grid: dx=8mm, dy=8mm, dz=5mm
Reference Value = 12.7 V/m; Power Drift = -0.016 dB
Peak SAR (extrapolated) = 0.244 W/kg
SAR(1 g) = 0.173 mW/g; SAR(10 g) = 0.118 mW/g
Maximum value of SAR (measured) = 0.187 mW/g

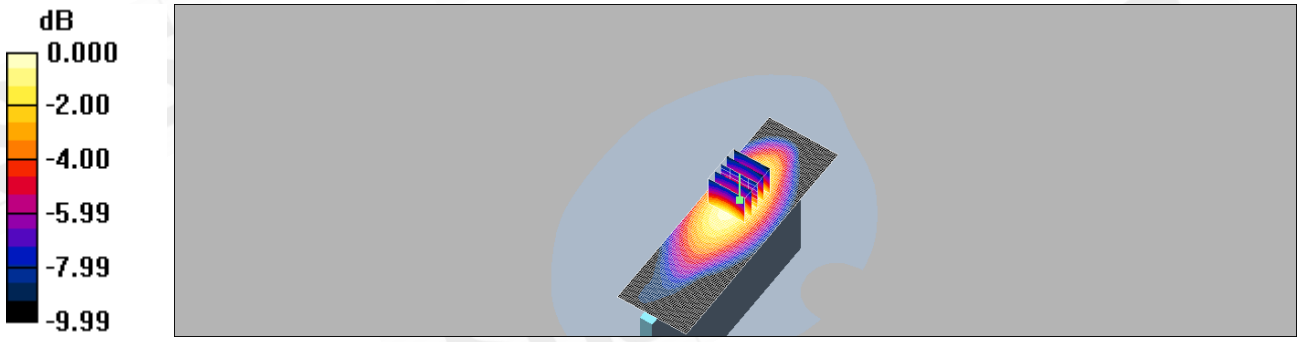

0 dB = 0.187mW/g

Unless otherwise stated the results shown in this test report refer only to the sample(s) tested and such sample(s) are retained for 90 days only.
除非另有說明，此報告結果僅對測試之樣品負責，同時此樣品僅保留90天。本報告未經本公司書面許可，不可部份複製。
This document is issued by the Company subject to its General Conditions of Service printed overleaf, available on request or accessible at www.sgs.com/terms_and_conditions.htm and, for electronic format documents, subject to Terms and Conditions for Electronic Documents at www.sgs.com/terms_e-document.htm. Attention is drawn to the limitation of liability, indemnification and jurisdiction issues defined therein. Any holder of this document is advised that information contained hereon reflects the Company's findings at the time of its intervention only and within the limits of Client's instructions, if any. The Company's sole responsibility is to its Client and this document does not exonerate parties to a transaction from exercising all their rights and obligations under the transaction documents. This document cannot be reproduced except in full, without prior written approval of the Company. Any unauthorized alteration, forgery or falsification of the content or appearance of this document is unlawful and offenders may be prosecuted to the fullest extent of the law.

Date: 2010/12/2

Primary Landscape mode_WCDMA B5_CH4132

DUT: M02M;

Communication System: WCDMA BAND5; Frequency: 826.4 MHz;Duty Cycle: 1:1
Medium: Muscle 900 MHz Medium parameters used (interpolated): f = 826.4 MHz; σ = 0.965 mho/m; ε_r = 53.9; ρ = 1000 kg/m^3

- Probe: ES3DV3 - SN3172; ConvF(5.84, 5.84, 5.84); Calibrated: 2010/5/21
- Sensor-Surface: 4mm (Mechanical Surface Detection)
- Electronics: DAE4 Sn547; Calibrated: 2010/8/18
- Phantom: SAM1; Type: SAM 4.0; Serial: TP:1419
- Measurement SW: DASY4, V4.7 Build 80; Postprocessing SW: SEMCAD, V1.8 Build 186

body/Area Scan (41x141x1): Measurement grid: dx=15mm, dy=15mm
Maximum value of SAR (interpolated) = 0.290 mW/g
body/Zoom Scan (5x5x7)/Cube 0: Measurement grid: dx=8mm, dy=8mm, dz=5mm
Reference Value = 16.7 V/m; Power Drift = -0.063 dB
Peak SAR (extrapolated) = 0.390 W/kg
SAR(1 g) = 0.271 mW/g; SAR(10 g) = 0.184 mW/g
Maximum value of SAR (measured) = 0.289 mW/g
body/Zoom Scan (5x5x7)/Cube 1: Measurement grid: dx=8mm, dy=8mm, dz=5mm
Reference Value = 16.7 V/m; Power Drift = -0.063 dB
Peak SAR (extrapolated) = 0.305 W/kg
SAR(1 g) = 0.186 mW/g; SAR(10 g) = 0.120 mW/g
Maximum value of SAR (measured) = 0.199 mW/g

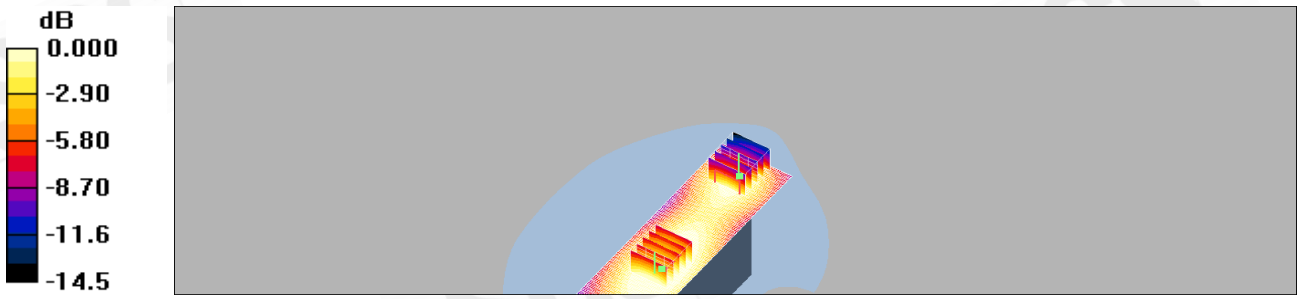

0 dB = 0.199mW/g

Unless otherwise stated the results shown in this test report refer only to the sample(s) tested and such sample(s) are retained for 90 days only.
除非另有說明，此報告結果僅對測試之樣品負責，同時此樣品僅保留90天。本報告未經本公司書面許可，不可部份複製。
This document is issued by the Company subject to its General Conditions of Service printed overleaf, available on request or accessible at www.sgs.com/terms_and_conditions.htm and, for electronic format documents, subject to Terms and Conditions for Electronic Documents at www.sgs.com/terms_e-document.htm. Attention is drawn to the limitation of liability, indemnification and jurisdiction issues defined therein. Any holder of this document is advised that information contained hereon reflects the Company's findings at the time of its intervention only and within the limits of Client's instructions, if any. The Company's sole responsibility is to its Client and this document does not exonerate parties to a transaction from exercising all their rights and obligations under the transaction documents. This document cannot be reproduced except in full, without prior written approval of the Company. Any unauthorized alteration, forgery or falsification of the content or appearance of this document is unlawful and offenders may be prosecuted to the fullest extent of the law.

Lap-held mode_WCDMA B5_CH4132_10mm

DUT: M02M;

Communication System: WCDMA BAND5; Frequency: 826.4 MHz;Duty Cycle: 1:1
Medium: Muscle 900 MHz Medium parameters used (interpolated): f = 826.4 MHz; σ = 0.965 mho/m; ε_r = 53.9; ρ = 1000 kg/m^3
Phantom section: Flat Section

DASY4 Configuration:

- Probe: ES3DV3 - SN3172; ConvF(5.84, 5.84, 5.84); Calibrated: 2010/5/21
- Sensor-Surface: 4mm (Mechanical Surface Detection)
- Electronics: DAE4 Sn547; Calibrated: 2010/8/18
- Phantom: SAM1; Type: SAM 4.0; Serial: TP:1419
- Measurement SW: DASY4, V4.7 Build 80; Postprocessing SW: SEMCAD, V1.8 Build 186

body/Area Scan (91x151x1): Measurement grid: dx=15mm, dy=15mm
Maximum value of SAR (interpolated) = 1.27 mW/g

body/Zoom Scan (5x5x7)/Cube 0: Measurement grid: dx=8mm, dy=8mm, dz=5mm
Reference Value = 10.7 V/m; Power Drift = -0.122 dB
Peak SAR (extrapolated) = 1.77 W/kg
SAR(1 g) = 1.15 mW/g; SAR(10 g) = 0.711 mW/g
Maximum value of SAR (measured) = 1.25 mW/g

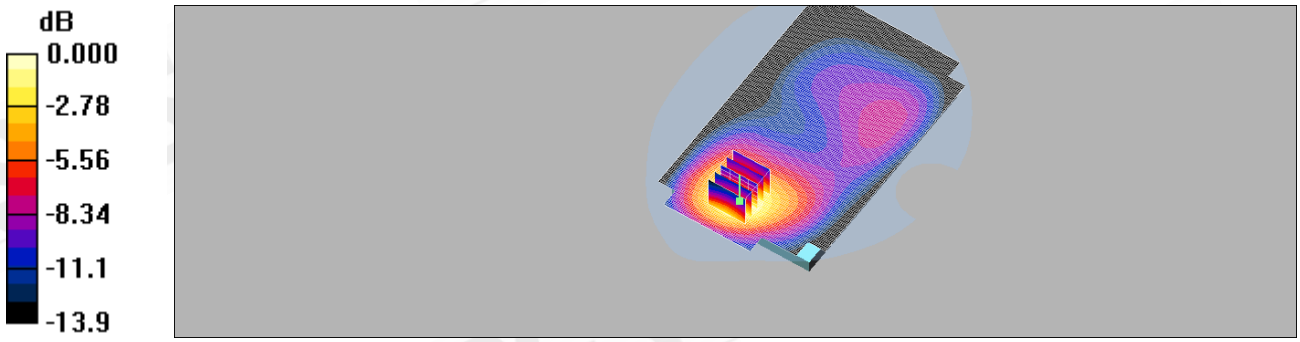

0 dB = 1.25mW/g

Unless otherwise stated the results shown in this test report refer only to the sample(s) tested and such sample(s) are retained for 90 days only.
除非另有說明，此報告結果僅對測試之樣品負責，同時此樣品僅保留90天。本報告未經本公司書面許可，不可部份複製。
This document is issued by the Company subject to its General Conditions of Service printed overleaf, available on request or accessible at www.sgs.com/terms_and_conditions.htm and, for electronic format documents, subject to Terms and Conditions for Electronic Documents at www.sgs.com/terms_e-document.htm. Attention is drawn to the limitation of liability, indemnification and jurisdiction issues defined therein. Any holder of this document is advised that information contained hereon reflects the Company's findings at the time of its intervention only and within the limits of Client's instructions, if any. The Company's sole responsibility is to its Client and this document does not exonerate parties to a transaction from exercising all their rights and obligations under the transaction documents. This document cannot be reproduced except in full, without prior written approval of the Company. Any unauthorized alteration, forgery or falsification of the content or appearance of this document is unlawful and offenders may be prosecuted to the fullest extent of the law.

Date: 2010/12/2

Lap-held mode_WCDMA B5_CH4183_10mm

DUT: M02M;

Communication System: WCDMA BAND5; Frequency: 836.6 MHz;Duty Cycle: 1:1
Medium: Muscle 900 MHz Medium parameters used: f = 837 MHz; σ = 0.976 mho/m; ε_r = 53.8; ρ = 1000 kg/m^3
Phantom section: Flat Section

DASY4 Configuration:

- Probe: ES3DV3 - SN3172; ConvF(5.84, 5.84, 5.84); Calibrated: 2010/5/21
- Sensor-Surface: 4mm (Mechanical Surface Detection)
- Electronics: DAE4 Sn547; Calibrated: 2010/8/18
- Phantom: SAM1; Type: SAM 4.0; Serial: TP:1419
- Measurement SW: DASY4, V4.7 Build 80; Postprocessing SW: SEMCAD, V1.8 Build 186

body/Area Scan (91x151x1): Measurement grid: dx=15mm, dy=15mm
Maximum value of SAR (interpolated) = 1.33 mW/g

body/Zoom Scan (5x5x7)/Cube 0: Measurement grid: dx=8mm, dy=8mm, dz=5mm
Reference Value = 11.2 V/m; Power Drift = -0.075 dB
Peak SAR (extrapolated) = 1.84 W/kg
SAR(1 g) = 1.2 mW/g; SAR(10 g) = 0.749 mW/g
Maximum value of SAR (measured) = 1.31 mW/g

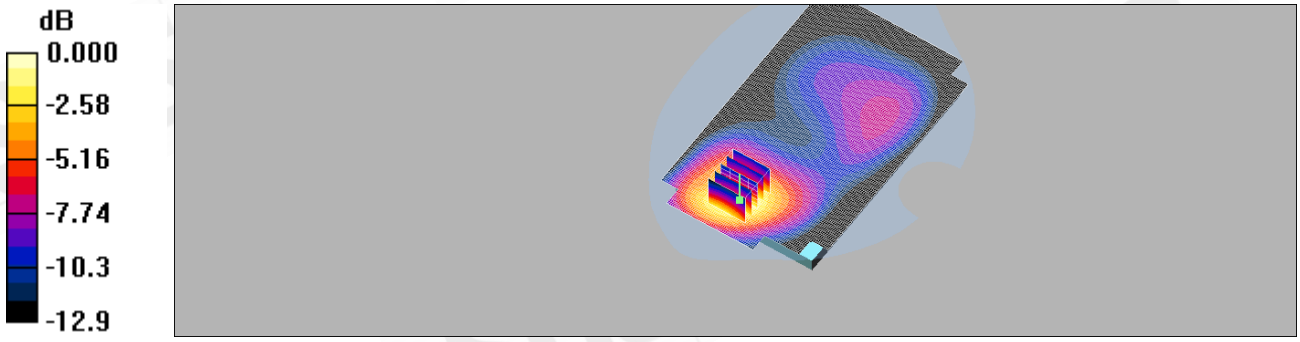

0 dB = 1.31mW/g

Unless otherwise stated the results shown in this test report refer only to the sample(s) tested and such sample(s) are retained for 90 days only.
除非另有說明，此報告結果僅對測試之樣品負責，同時此樣品僅保留90天。本報告未經本公司書面許可，不可部份複製。
This document is issued by the Company subject to its General Conditions of Service printed overleaf, available on request or accessible at www.sgs.com/terms_and_conditions.htm and, for electronic format documents, subject to Terms and Conditions for Electronic Documents at www.sgs.com/terms_e-document.htm. Attention is drawn to the limitation of liability, indemnification and jurisdiction issues defined therein. Any holder of this document is advised that information contained hereon reflects the Company's findings at the time of its intervention only and within the limits of Client's instructions, if any. The Company's sole responsibility is to its Client and this document does not exonerate parties to a transaction from exercising all their rights and obligations under the transaction documents. This document cannot be reproduced except in full, without prior written approval of the Company. Any unauthorized alteration, forgery or falsification of the content or appearance of this document is unlawful and offenders may be prosecuted to the fullest extent of the law.

Date: 2010/12/2

Lap-held mode_WCDMA B5_CH4233_10mm

DUT: M02M;

Communication System: WCDMA BAND5; Frequency: 846.6 MHz;Duty Cycle: 1:1
Medium: Muscle 900 MHz Medium parameters used: f = 847 MHz; σ = 0.985 mho/m; ε_r = 53.7; ρ = 1000 kg/m^3
Phantom section: Flat Section

DASY4 Configuration:

- Probe: ES3DV3 - SN3172; ConvF(5.84, 5.84, 5.84); Calibrated: 2010/5/21
- Sensor-Surface: 4mm (Mechanical Surface Detection)
- Electronics: DAE4 Sn547; Calibrated: 2010/8/18
- Phantom: SAM1; Type: SAM 4.0; Serial: TP:1419
- Measurement SW: DASY4, V4.7 Build 80; Postprocessing SW: SEMCAD, V1.8 Build 186

body/Area Scan (91x151x1): Measurement grid: dx=15mm, dy=15mm
Maximum value of SAR (interpolated) = 1.20 mW/g

body/Zoom Scan (5x5x7)/Cube 0: Measurement grid: dx=8mm, dy=8mm, dz=5mm
Reference Value = 10.9 V/m; Power Drift = -0.134 dB
Peak SAR (extrapolated) = 1.66 W/kg
SAR(1 g) = 1.08 mW/g; SAR(10 g) = 0.675 mW/g
Maximum value of SAR (measured) = 1.16 mW/g

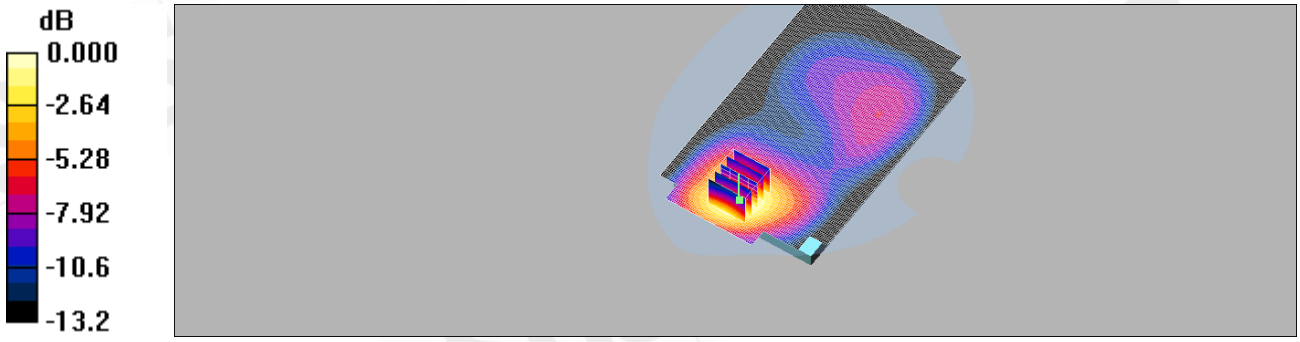

0 dB = 1.16mW/g

Unless otherwise stated the results shown in this test report refer only to the sample(s) tested and such sample(s) are retained for 90 days only.
除非另有說明，此報告結果僅對測試之樣品負責，同時此樣品僅保留90天。本報告未經本公司書面許可，不可部份複製。
This document is issued by the Company subject to its General Conditions of Service printed overleaf, available on request or accessible at www.sgs.com/terms_and_conditions.htm and, for electronic format documents, subject to Terms and Conditions for Electronic Documents at www.sgs.com/terms_e-document.htm. Attention is drawn to the limitation of liability, indemnification and jurisdiction issues defined therein. Any holder of this document is advised that information contained hereon reflects the Company's findings at the time of its intervention only and within the limits of Client's instructions, if any. The Company's sole responsibility is to its Client and this document does not exonerate parties to a transaction from exercising all their rights and obligations under the transaction documents. This document cannot be reproduced except in full, without prior written approval of the Company. Any unauthorized alteration, forgery or falsification of the content or appearance of this document is unlawful and offenders may be prosecuted to the fullest extent of the law.

Lap-held mode_WLAN802.11 b_CH6

DUT: M02M;

Communication System: Wireless LAN; Frequency: 2437 MHz;Duty Cycle: 1:1
Medium: Muscle 2450 Medium parameters used: f = 2437 MHz; σ = 2.01 mho/m; ε_r = 52; ρ = 1000 kg/m^3
Phantom section: Flat Section

DASY4 Configuration:

- Probe: ES3DV3 - SN3172; ConvF(4.11, 4.11, 4.11); Calibrated: 2010/5/21
- Sensor-Surface: 4mm (Mechanical Surface Detection)
- Electronics: DAE4 Sn547; Calibrated: 2010/8/18
- Phantom: SAM1; Type: SAM 4.0; Serial: TP:1419
- Measurement SW: DASY4, V4.7 Build 80; Postprocessing SW: SEMCAD, V1.8 Build 186

body/Area Scan (101x151x1): Measurement grid: dx=15mm, dy=15mm
Maximum value of SAR (interpolated) = 0.403 mW/g

body/Zoom Scan (5x5x7)/Cube 0: Measurement grid: dx=8mm, dy=8mm, dz=5mm
Reference Value = 0.460 V/m; Power Drift = 0.19 dB
Peak SAR (extrapolated) = 0.842 W/kg
SAR(1 g) = 0.329 mW/g; SAR(10 g) = 0.133 mW/g
Maximum value of SAR (measured) = 0.393 mW/g

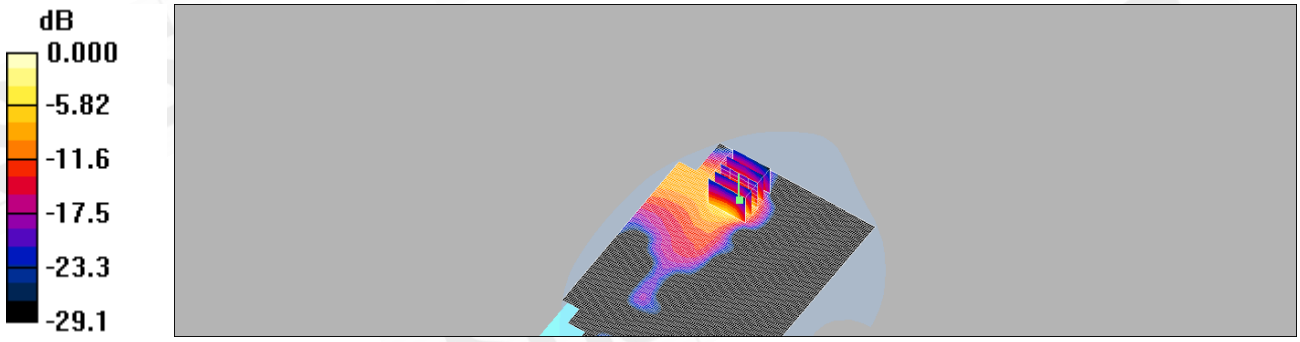

0 dB = 0.393mW/g

Unless otherwise stated the results shown in this test report refer only to the sample(s) tested and such sample(s) are retained for 90 days only.
除非另有說明，此報告結果僅對測試之樣品負責，同時此樣品僅保留90天。本報告未經本公司書面許可，不可部份複製。
This document is issued by the Company subject to its General Conditions of Service printed overleaf, available on request or accessible at www.sgs.com/terms_and_conditions.htm and, for electronic format documents, subject to Terms and Conditions for Electronic Documents at www.sgs.com/terms_e-document.htm. Attention is drawn to the limitation of liability, indemnification and jurisdiction issues defined therein. Any holder of this document is advised that information contained hereon reflects the Company's findings at the time of its intervention only and within the limits of Client's instructions, if any. The Company's sole responsibility is to its Client and this document does not exonerate parties to a transaction from exercising all their rights and obligations under the transaction documents. This document cannot be reproduced except in full, without prior written approval of the Company. Any unauthorized alteration, forgery or falsification of the content or appearance of this document is unlawful and offenders may be prosecuted to the fullest extent of the law.

Date: 2010/11/26

Secondary portrait mode_WLAN802.11 b_CH6

DUT: M02M;

Communication System: Wireless LAN; Frequency: 2437 MHz;Duty Cycle: 1:1
Medium: Muscle 2450 Medium parameters used: f = 2437 MHz; σ = 2.01 mho/m; ε_r = 52; ρ = 1000 kg/m^3
Phantom section: Flat Section

DASY4 Configuration:

- Probe: ES3DV3 - SN3172; ConvF(4.11, 4.11, 4.11); Calibrated: 2010/5/21
- Sensor-Surface: 4mm (Mechanical Surface Detection)
- Electronics: DAE4 Sn547; Calibrated: 2010/8/18
- Phantom: SAM1; Type: SAM 4.0; Serial: TP:1419
- Measurement SW: DASY4, V4.7 Build 80; Postprocessing SW: SEMCAD, V1.8 Build 186

body/Area Scan (41x101x1): Measurement grid: dx=15mm, dy=15mm
Maximum value of SAR (interpolated) = 0.056 mW/g

body/Zoom Scan (5x5x7)/Cube 0: Measurement grid: dx=8mm, dy=8mm, dz=5mm
Reference Value = 4.58 V/m; Power Drift = 0.057 dB
Peak SAR (extrapolated) = 0.100 W/kg
SAR(1 g) = 0.051 mW/g; SAR(10 g) = 0.026 mW/g
Maximum value of SAR (measured) = 0.057 mW/g

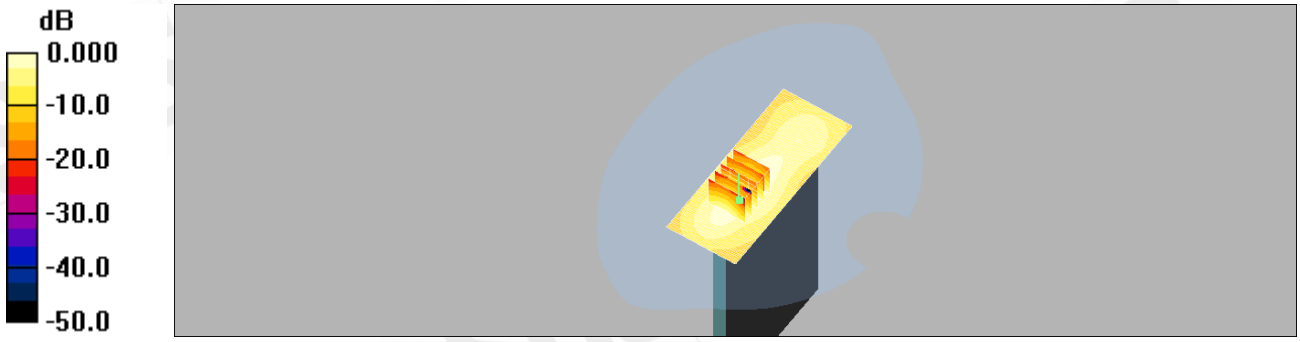

0 dB = 0.057mW/g

Unless otherwise stated the results shown in this test report refer only to the sample(s) tested and such sample(s) are retained for 90 days only.
除非另有說明，此報告結果僅對測試之樣品負責，同時此樣品僅保留90天。本報告未經本公司書面許可，不可部份複製。
This document is issued by the Company subject to its General Conditions of Service printed overleaf, available on request or accessible at www.sgs.com/terms_and_conditions.htm and, for electronic format documents, subject to Terms and Conditions for Electronic Documents at www.sgs.com/terms_e-document.htm. Attention is drawn to the limitation of liability, indemnification and jurisdiction issues defined therein. Any holder of this document is advised that information contained hereon reflects the Company's findings at the time of its intervention only and within the limits of Client's instructions, if any. The Company's sole responsibility is to its Client and this document does not exonerate parties to a transaction from exercising all their rights and obligations under the transaction documents. This document cannot be reproduced except in full, without prior written approval of the Company. Any unauthorized alteration, forgery or falsification of the content or appearance of this document is unlawful and offenders may be prosecuted to the fullest extent of the law.

Secondary landscape mode_WLAN802.11 b_CH6

DUT: M02M;

Communication System: Wireless LAN; Frequency: 2437 MHz;Duty Cycle: 1:1
Medium: Muscle 2450 Medium parameters used: f = 2437 MHz; σ = 2.01 mho/m; ε_r = 52; ρ = 1000 kg/m^3
Phantom section: Flat Section

DASY4 Configuration:

- Probe: ES3DV3 - SN3172; ConvF(4.11, 4.11, 4.11); Calibrated: 2010/5/21
- Sensor-Surface: 4mm (Mechanical Surface Detection)
- Electronics: DAE4 Sn547; Calibrated: 2010/8/18
- Phantom: SAM1; Type: SAM 4.0; Serial: TP:1419
- Measurement SW: DASY4, V4.7 Build 80; Postprocessing SW: SEMCAD, V1.8 Build 186

body/Area Scan (41x161x1): Measurement grid: dx=15mm, dy=15mm
Maximum value of SAR (interpolated) = 0.123 mW/g

body/Zoom Scan (5x5x7)/Cube 0: Measurement grid: dx=8mm, dy=8mm, dz=5mm
Reference Value = 2.27 V/m; Power Drift = 0.198 dB
Peak SAR (extrapolated) = 0.263 W/kg
SAR(1 g) = 0.116 mW/g; SAR(10 g) = 0.050 mW/g
Maximum value of SAR (measured) = 0.136 mW/g

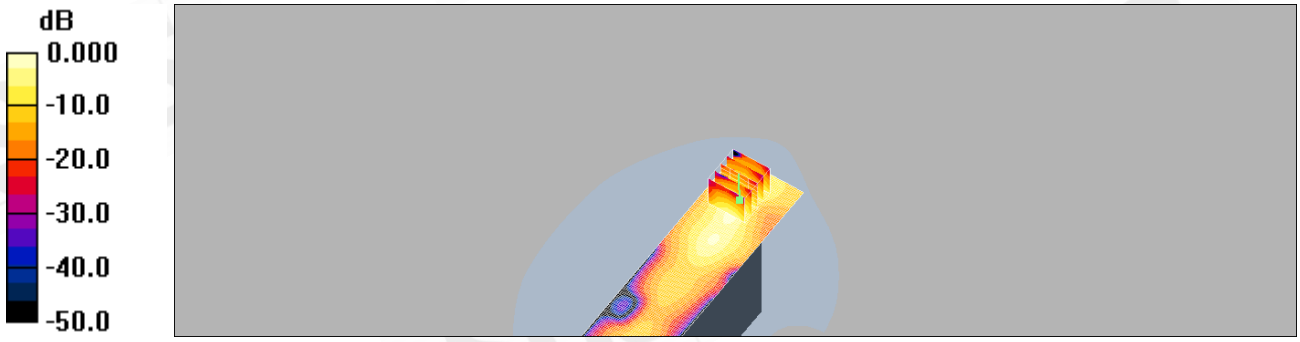

0 dB = 0.136mW/g

Unless otherwise stated the results shown in this test report refer only to the sample(s) tested and such sample(s) are retained for 90 days only.
除非另有說明，此報告結果僅對測試之樣品負責，同時此樣品僅保留90天。本報告未經本公司書面許可，不可部份複製。
This document is issued by the Company subject to its General Conditions of Service printed overleaf, available on request or accessible at www.sgs.com/terms_and_conditions.htm and, for electronic format documents, subject to Terms and Conditions for Electronic Documents at www.sgs.com/terms_e-document.htm. Attention is drawn to the limitation of liability, indemnification and jurisdiction issues defined therein. Any holder of this document is advised that information contained hereon reflects the Company's findings at the time of its intervention only and within the limits of Client's instructions, if any. The Company's sole responsibility is to its Client and this document does not exonerate parties to a transaction from exercising all their rights and obligations under the transaction documents. This document cannot be reproduced except in full, without prior written approval of the Company. Any unauthorized alteration, forgery or falsification of the content or appearance of this document is unlawful and offenders may be prosecuted to the fullest extent of the law.

Date: 2010/11/26

Primary Landscape mode_WLAN802.11 b_CH6

DUT: M02M;

Communication System: Wireless LAN; Frequency: 2437 MHz;Duty Cycle: 1:1
Medium: Muscle 2450 Medium parameters used: f = 2437 MHz; σ = 2.01 mho/m; ε_r = 52; ρ = 1000 kg/m^3
Phantom section: Flat Section

DASY4 Configuration:

- Probe: ES3DV3 - SN3172; ConvF(4.11, 4.11, 4.11); Calibrated: 2010/5/21
- Sensor-Surface: 4mm (Mechanical Surface Detection)
- Electronics: DAE4 Sn547; Calibrated: 2010/8/18
- Phantom: SAM1; Type: SAM 4.0; Serial: TP:1419
- Measurement SW: DASY4, V4.7 Build 80; Postprocessing SW: SEMCAD, V1.8 Build 186

body/Area Scan (41x141x1): Measurement grid: dx=15mm, dy=15mm
Maximum value of SAR (interpolated) = 0.028 mW/g

body/Zoom Scan (5x5x7)/Cube 0: Measurement grid: dx=8mm, dy=8mm, dz=5mm
Reference Value = 1.69 V/m; Power Drift = -0.193 dB
Peak SAR (extrapolated) = 0.045 W/kg
SAR(1 g) = 0.025 mW/g; SAR(10 g) = 0.014 mW/g
Maximum value of SAR (measured) = 0.027 mW/g

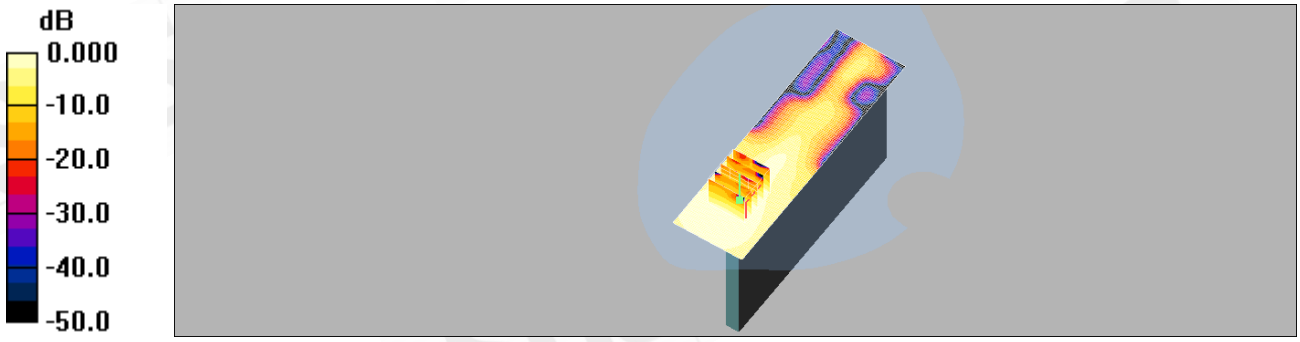

0 dB = 0.027mW/g

Unless otherwise stated the results shown in this test report refer only to the sample(s) tested and such sample(s) are retained for 90 days only.
除非另有說明，此報告結果僅對測試之樣品負責，同時此樣品僅保留90天。本報告未經本公司書面許可，不可部份複製。
This document is issued by the Company subject to its General Conditions of Service printed overleaf, available on request or accessible at www.sgs.com/terms_and_conditions.htm and, for electronic format documents, subject to Terms and Conditions for Electronic Documents at www.sgs.com/terms_e-document.htm. Attention is drawn to the limitation of liability, indemnification and jurisdiction issues defined therein. Any holder of this document is advised that information contained hereon reflects the Company's findings at the time of its intervention only and within the limits of Client's instructions, if any. The Company's sole responsibility is to its Client and this document does not exonerate parties to a transaction from exercising all their rights and obligations under the transaction documents. This document cannot be reproduced except in full, without prior written approval of the Company. Any unauthorized alteration, forgery or falsification of the content or appearance of this document is unlawful and offenders may be prosecuted to the fullest extent of the law.

Lap-held mode_WLAN802.11 g_CH6

DUT: M02M;

Communication System: Wireless LAN; Frequency: 2437 MHz;Duty Cycle: 1:1
Medium: Muscle 2450 Medium parameters used: f = 2437 MHz; σ = 2.01 mho/m; ε_r = 52; ρ = 1000 kg/m^3
Phantom section: Flat Section

DASY4 Configuration:

- Probe: ES3DV3 - SN3172; ConvF(4.11, 4.11, 4.11); Calibrated: 2010/5/21
- Sensor-Surface: 4mm (Mechanical Surface Detection)
- Electronics: DAE4 Sn547; Calibrated: 2010/8/18
- Phantom: SAM1; Type: SAM 4.0; Serial: TP:1419
- Measurement SW: DASY4, V4.7 Build 80; Postprocessing SW: SEMCAD, V1.8 Build 186

body/Area Scan (101x151x1): Measurement grid: dx=15mm, dy=15mm
Maximum value of SAR (interpolated) = 0.328 mW/g

body/Zoom Scan (5x5x7)/Cube 0: Measurement grid: dx=8mm, dy=8mm, dz=5mm
Reference Value = 2.81 V/m; Power Drift = 0.134 dB
Peak SAR (extrapolated) = 0.625 W/kg
SAR(1 g) = 0.258 mW/g; SAR(10 g) = 0.111 mW/g
Maximum value of SAR (measured) = 0.297 mW/g

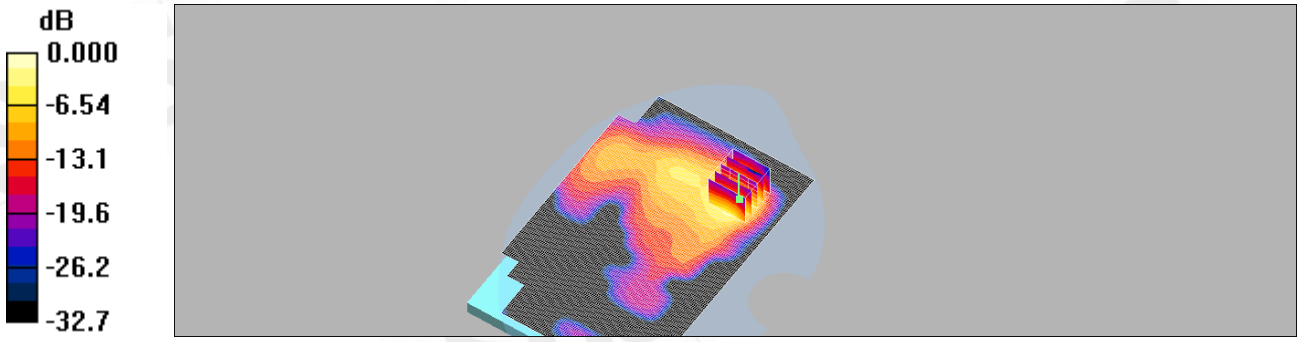

0 dB = 0.297mW/g

Unless otherwise stated the results shown in this test report refer only to the sample(s) tested and such sample(s) are retained for 90 days only.
除非另有說明，此報告結果僅對測試之樣品負責，同時此樣品僅保留90天。本報告未經本公司書面許可，不可部份複製。
This document is issued by the Company subject to its General Conditions of Service printed overleaf, available on request or accessible at www.sgs.com/terms_and_conditions.htm and, for electronic format documents, subject to Terms and Conditions for Electronic Documents at www.sgs.com/terms_e-document.htm. Attention is drawn to the limitation of liability, indemnification and jurisdiction issues defined therein. Any holder of this document is advised that information contained hereon reflects the Company's findings at the time of its intervention only and within the limits of Client's instructions, if any. The Company's sole responsibility is to its Client and this document does not exonerate parties to a transaction from exercising all their rights and obligations under the transaction documents. This document cannot be reproduced except in full, without prior written approval of the Company. Any unauthorized alteration, forgery or falsification of the content or appearance of this document is unlawful and offenders may be prosecuted to the fullest extent of the law.

Date: 2010/11/26

Secondary portrait mode_WLAN802.11 g_CH6

DUT: M02M;

Communication System: Wireless LAN; Frequency: 2437 MHz;Duty Cycle: 1:1
Medium: Muscle 2450 Medium parameters used: f = 2437 MHz; σ = 2.01 mho/m; ε_r = 52; ρ = 1000 kg/m^3
Phantom section: Flat Section

DASY4 Configuration:

- Probe: ES3DV3 - SN3172; ConvF(4.11, 4.11, 4.11); Calibrated: 2010/5/21
- Sensor-Surface: 4mm (Mechanical Surface Detection)
- Electronics: DAE4 Sn547; Calibrated: 2010/8/18
- Phantom: SAM1; Type: SAM 4.0; Serial: TP:1419
- Measurement SW: DASY4, V4.7 Build 80; Postprocessing SW: SEMCAD, V1.8 Build 186

body/Area Scan (41x101x1): Measurement grid: dx=15mm, dy=15mm
Maximum value of SAR (interpolated) = 0.115 mW/g

body/Zoom Scan (5x5x7)/Cube 0: Measurement grid: dx=8mm, dy=8mm, dz=5mm
Reference Value = 6.25 V/m; Power Drift = -0.085 dB
Peak SAR (extrapolated) = 0.191 W/kg
SAR(1 g) = 0.096 mW/g; SAR(10 g) = 0.049 mW/g
Maximum value of SAR (measured) = 0.111 mW/g

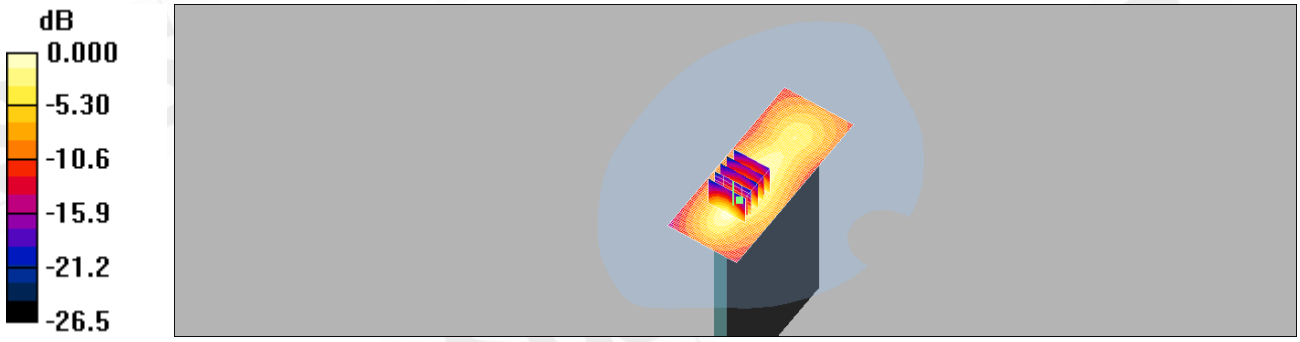

0 dB = 0.111mW/g

Unless otherwise stated the results shown in this test report refer only to the sample(s) tested and such sample(s) are retained for 90 days only.
除非另有說明，此報告結果僅對測試之樣品負責，同時此樣品僅保留90天。本報告未經本公司書面許可，不可部份複製。
This document is issued by the Company subject to its General Conditions of Service printed overleaf, available on request or accessible at www.sgs.com/terms_and_conditions.htm and, for electronic format documents, subject to Terms and Conditions for Electronic Documents at www.sgs.com/terms_e-document.htm. Attention is drawn to the limitation of liability, indemnification and jurisdiction issues defined therein. Any holder of this document is advised that information contained hereon reflects the Company's findings at the time of its intervention only and within the limits of Client's instructions, if any. The Company's sole responsibility is to its Client and this document does not exonerate parties to a transaction from exercising all their rights and obligations under the transaction documents. This document cannot be reproduced except in full, without prior written approval of the Company. Any unauthorized alteration, forgery or falsification of the content or appearance of this document is unlawful and offenders may be prosecuted to the fullest extent of the law.

Date: 2010/11/26

Secondary landscape mode_WLAN802.11 g_CH6

DUT: M02M;

Communication System: Wireless LAN; Frequency: 2437 MHz;Duty Cycle: 1:1
Medium: Muscle 2450 Medium parameters used: f = 2437 MHz; σ = 2.01 mho/m; ε_r = 52; ρ = 1000 kg/m^3
Phantom section: Flat Section

DASY4 Configuration:

- Probe: ES3DV3 - SN3172; ConvF(4.11, 4.11, 4.11); Calibrated: 2010/5/21
- Sensor-Surface: 4mm (Mechanical Surface Detection)
- Electronics: DAE4 Sn547; Calibrated: 2010/8/18
- Phantom: SAM1; Type: SAM 4.0; Serial: TP:1419
- Measurement SW: DASY4, V4.7 Build 80; Postprocessing SW: SEMCAD, V1.8 Build 186

body/Area Scan (41x161x1): Measurement grid: dx=15mm, dy=15mm
Maximum value of SAR (interpolated) = 0.121 mW/g

body/Zoom Scan (5x5x7)/Cube 0: Measurement grid: dx=8mm, dy=8mm, dz=5mm
Reference Value = 2.24 V/m; Power Drift = 0.158 dB
Peak SAR (extrapolated) = 0.286 W/kg
SAR(1 g) = 0.123 mW/g; SAR(10 g) = 0.052 mW/g
Maximum value of SAR (measured) = 0.144 mW/g

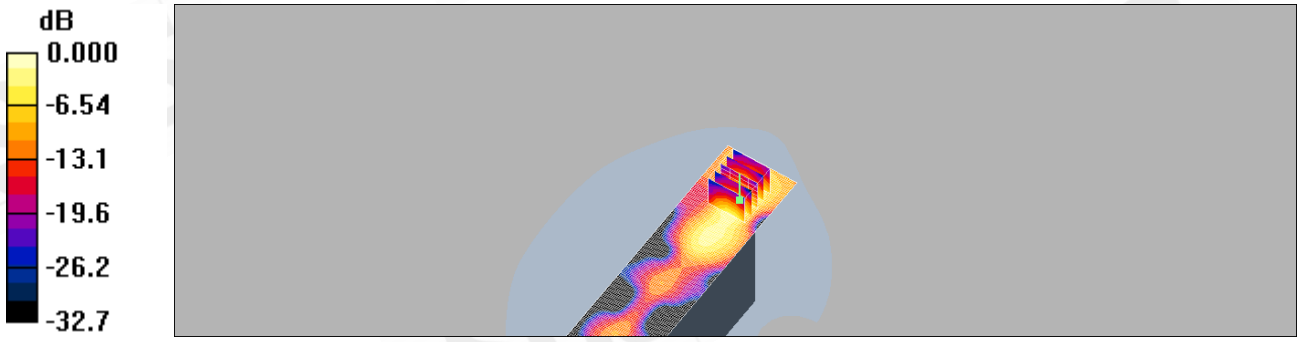

0 dB = 0.144mW/g

Unless otherwise stated the results shown in this test report refer only to the sample(s) tested and such sample(s) are retained for 90 days only.
除非另有說明，此報告結果僅對測試之樣品負責，同時此樣品僅保留90天。本報告未經本公司書面許可，不可部份複製。
This document is issued by the Company subject to its General Conditions of Service printed overleaf, available on request or accessible at www.sgs.com/terms_and_conditions.htm and, for electronic format documents, subject to Terms and Conditions for Electronic Documents at www.sgs.com/terms_e-document.htm. Attention is drawn to the limitation of liability, indemnification and jurisdiction issues defined therein. Any holder of this document is advised that information contained hereon reflects the Company's findings at the time of its intervention only and within the limits of Client's instructions, if any. The Company's sole responsibility is to its Client and this document does not exonerate parties to a transaction from exercising all their rights and obligations under the transaction documents. This document cannot be reproduced except in full, without prior written approval of the Company. Any unauthorized alteration, forgery or falsification of the content or appearance of this document is unlawful and offenders may be prosecuted to the fullest extent of the law.

Primary Landscape mode_WLAN802.11 g_CH6

DUT: M02M;

Communication System: Wireless LAN; Frequency: 2437 MHz;Duty Cycle: 1:1
Medium: Muscle 2450 Medium parameters used: f = 2437 MHz; σ = 2.01 mho/m; ε_r = 52; ρ = 1000 kg/m^3
Phantom section: Flat Section

DASY4 Configuration:

- Probe: ES3DV3 - SN3172; ConvF(4.11, 4.11, 4.11); Calibrated: 2010/5/21
- Sensor-Surface: 4mm (Mechanical Surface Detection)
- Electronics: DAE4 Sn547; Calibrated: 2010/8/18
- Phantom: SAM1; Type: SAM 4.0; Serial: TP:1419
- Measurement SW: DASY4, V4.7 Build 80; Postprocessing SW: SEMCAD, V1.8 Build 186

body/Area Scan (41x141x1): Measurement grid: dx=15mm, dy=15mm
Maximum value of SAR (interpolated) = 0.028 mW/g

body/Zoom Scan (5x5x7)/Cube 0: Measurement grid: dx=8mm, dy=8mm, dz=5mm
Reference Value = 1.76 V/m; Power Drift = -0.130 dB
Peak SAR (extrapolated) = 0.057 W/kg
SAR(1 g) = 0.030 mW/g; SAR(10 g) = 0.016 mW/g
Maximum value of SAR (measured) = 0.031 mW/g

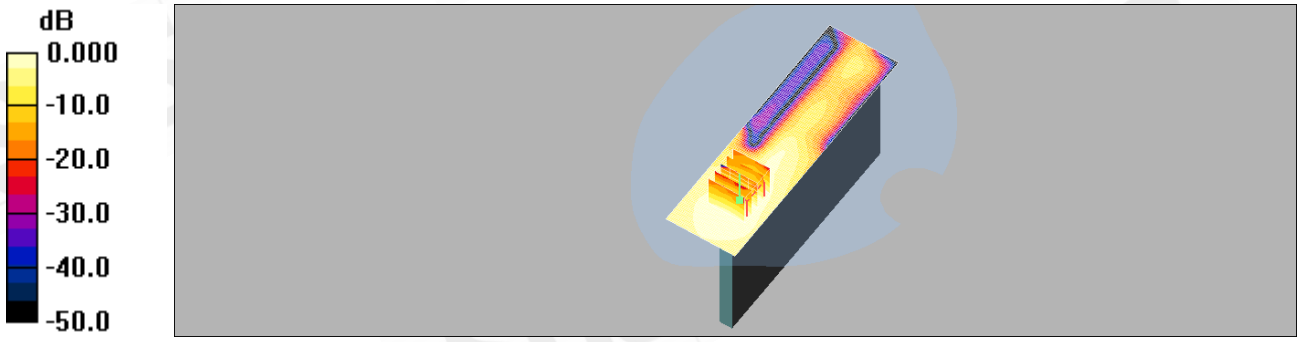

0 dB = 0.031mW/g

Unless otherwise stated the results shown in this test report refer only to the sample(s) tested and such sample(s) are retained for 90 days only.
除非另有說明，此報告結果僅對測試之樣品負責，同時此樣品僅保留90天。本報告未經本公司書面許可，不可部份複製。
This document is issued by the Company subject to its General Conditions of Service printed overleaf, available on request or accessible at www.sgs.com/terms_and_conditions.htm and, for electronic format documents, subject to Terms and Conditions for Electronic Documents at www.sgs.com/terms_e-document.htm. Attention is drawn to the limitation of liability, indemnification and jurisdiction issues defined therein. Any holder of this document is advised that information contained hereon reflects the Company's findings at the time of its intervention only and within the limits of Client's instructions, if any. The Company's sole responsibility is to its Client and this document does not exonerate parties to a transaction from exercising all their rights and obligations under the transaction documents. This document cannot be reproduced except in full, without prior written approval of the Company. Any unauthorized alteration, forgery or falsification of the content or appearance of this document is unlawful and offenders may be prosecuted to the fullest extent of the law.

Lap-held mode_WLAN802.11 n(20M)_CH6

DUT: M02M;

Communication System: FCC_Wireless N(20M); Frequency: 2437 MHz;Duty Cycle: 1:1
Medium: Muscle 2450 Medium parameters used: f = 2437 MHz; σ = 2.01 mho/m; ε_r = 52; ρ = 1000 kg/m^3
Phantom section: Flat Section

DASY4 Configuration:

- Probe: ES3DV3 - SN3172; ConvF(4.11, 4.11, 4.11); Calibrated: 2010/5/21
- Sensor-Surface: 4mm (Mechanical Surface Detection)
- Electronics: DAE4 Sn547; Calibrated: 2010/8/18
- Phantom: SAM1; Type: SAM 4.0; Serial: TP:1419
- Measurement SW: DASY4, V4.7 Build 80; Postprocessing SW: SEMCAD, V1.8 Build 186

body/Area Scan (101x151x1): Measurement grid: dx=15mm, dy=15mm
Maximum value of SAR (interpolated) = 0.292 mW/g

body/Zoom Scan (5x5x7)/Cube 0: Measurement grid: dx=8mm, dy=8mm, dz=5mm
Reference Value = 0.157 V/m; Power Drift = 0.158 dB
Peak SAR (extrapolated) = 0.640 W/kg
SAR(1 g) = 0.244 mW/g; SAR(10 g) = 0.098 mW/g
Maximum value of SAR (measured) = 0.296 mW/g

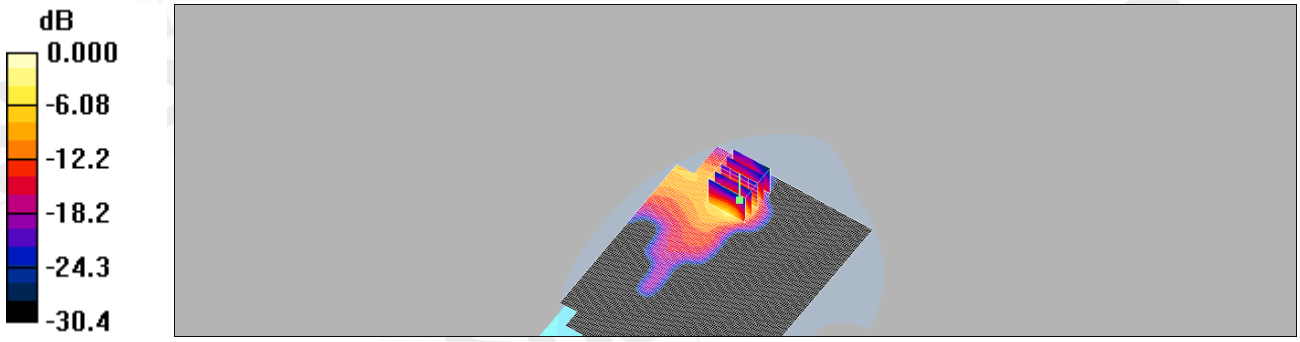

0 dB = 0.296mW/g

Unless otherwise stated the results shown in this test report refer only to the sample(s) tested and such sample(s) are retained for 90 days only.
除非另有說明，此報告結果僅對測試之樣品負責，同時此樣品僅保留90天。本報告未經本公司書面許可，不可部份複製。
This document is issued by the Company subject to its General Conditions of Service printed overleaf, available on request or accessible at www.sgs.com/terms_and_conditions.htm and, for electronic format documents, subject to Terms and Conditions for Electronic Documents at www.sgs.com/terms_e-document.htm. Attention is drawn to the limitation of liability, indemnification and jurisdiction issues defined therein. Any holder of this document is advised that information contained hereon reflects the Company's findings at the time of its intervention only and within the limits of Client's instructions, if any. The Company's sole responsibility is to its Client and this document does not exonerate parties to a transaction from exercising all their rights and obligations under the transaction documents. This document cannot be reproduced except in full, without prior written approval of the Company. Any unauthorized alteration, forgery or falsification of the content or appearance of this document is unlawful and offenders may be prosecuted to the fullest extent of the law.

Date: 2010/11/26

Secondary portrait mode_WLAN802.11 n(20M)_CH6

DUT: M02M;

Communication System: FCC_Wireless N(20M); Frequency: 2437 MHz;Duty Cycle: 1:1
Medium: Muscle 2450 Medium parameters used: f = 2437 MHz; σ = 2.01 mho/m; ε_r = 52; ρ = 1000 kg/m^3
Phantom section: Flat Section

DASY4 Configuration:

- Probe: ES3DV3 - SN3172; ConvF(4.11, 4.11, 4.11); Calibrated: 2010/5/21
- Sensor-Surface: 4mm (Mechanical Surface Detection)
- Electronics: DAE4 Sn547; Calibrated: 2010/8/18
- Phantom: SAM1; Type: SAM 4.0; Serial: TP:1419
- Measurement SW: DASY4, V4.7 Build 80; Postprocessing SW: SEMCAD, V1.8 Build 186

body/Area Scan (41x101x1): Measurement grid: dx=15mm, dy=15mm
Maximum value of SAR (interpolated) = 0.065 mW/g

body/Zoom Scan (5x5x7)/Cube 0: Measurement grid: dx=8mm, dy=8mm, dz=5mm
Reference Value = 4.75 V/m; Power Drift = 0.075 dB
Peak SAR (extrapolated) = 0.115 W/kg
SAR(1 g) = 0.058 mW/g; SAR(10 g) = 0.029 mW/g
Maximum value of SAR (measured) = 0.065 mW/g

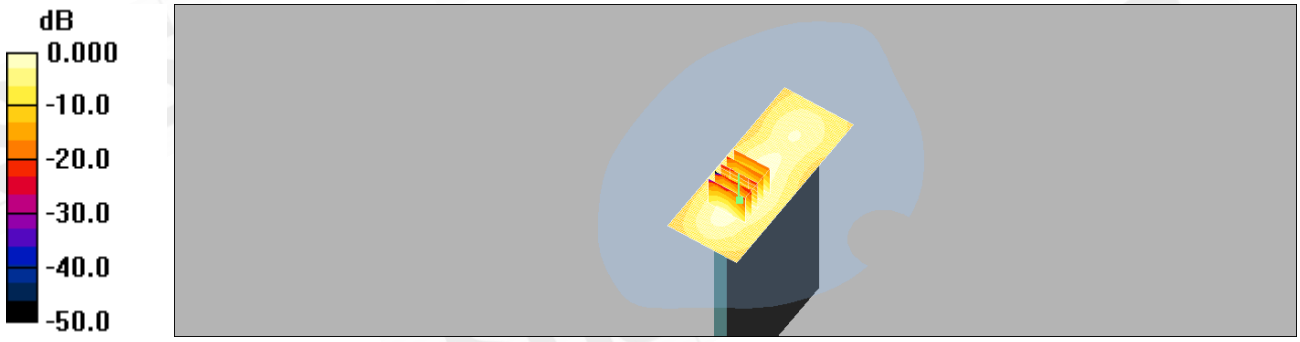

0 dB = 0.065mW/g

Unless otherwise stated the results shown in this test report refer only to the sample(s) tested and such sample(s) are retained for 90 days only.
除非另有說明，此報告結果僅對測試之樣品負責，同時此樣品僅保留90天。本報告未經本公司書面許可，不可部份複製。
This document is issued by the Company subject to its General Conditions of Service printed overleaf, available on request or accessible at www.sgs.com/terms_and_conditions.htm and, for electronic format documents, subject to Terms and Conditions for Electronic Documents at www.sgs.com/terms_e-document.htm. Attention is drawn to the limitation of liability, indemnification and jurisdiction issues defined therein. Any holder of this document is advised that information contained hereon reflects the Company's findings at the time of its intervention only and within the limits of Client's instructions, if any. The Company's sole responsibility is to its Client and this document does not exonerate parties to a transaction from exercising all their rights and obligations under the transaction documents. This document cannot be reproduced except in full, without prior written approval of the Company. Any unauthorized alteration, forgery or falsification of the content or appearance of this document is unlawful and offenders may be prosecuted to the fullest extent of the law.

Date: 2010/11/26

Secondary landscape mode_WLAN802.11 n(20M)_CH6

DUT: M02M;

Communication System: FCC_Wireless N(20M); Frequency: 2437 MHz;Duty Cycle: 1:1
Medium: Muscle 2450 Medium parameters used: f = 2437 MHz; σ = 2.01 mho/m; ε_r = 52; ρ = 1000 kg/m^3
Phantom section: Flat Section

DASY4 Configuration:

- Probe: ES3DV3 - SN3172; ConvF(4.11, 4.11, 4.11); Calibrated: 2010/5/21
- Sensor-Surface: 4mm (Mechanical Surface Detection)
- Electronics: DAE4 Sn547; Calibrated: 2010/8/18
- Phantom: SAM1; Type: SAM 4.0; Serial: TP:1419
- Measurement SW: DASY4, V4.7 Build 80; Postprocessing SW: SEMCAD, V1.8 Build 186

body/Area Scan (41x161x1): Measurement grid: dx=15mm, dy=15mm
Maximum value of SAR (interpolated) = 0.077 mW/g

body/Zoom Scan (5x5x7)/Cube 0: Measurement grid: dx=8mm, dy=8mm, dz=5mm
Reference Value = 1.76 V/m; Power Drift = 0.154 dB
Peak SAR (extrapolated) = 0.157 W/kg
SAR(1 g) = 0.071 mW/g; SAR(10 g) = 0.031 mW/g
Maximum value of SAR (measured) = 0.078 mW/g

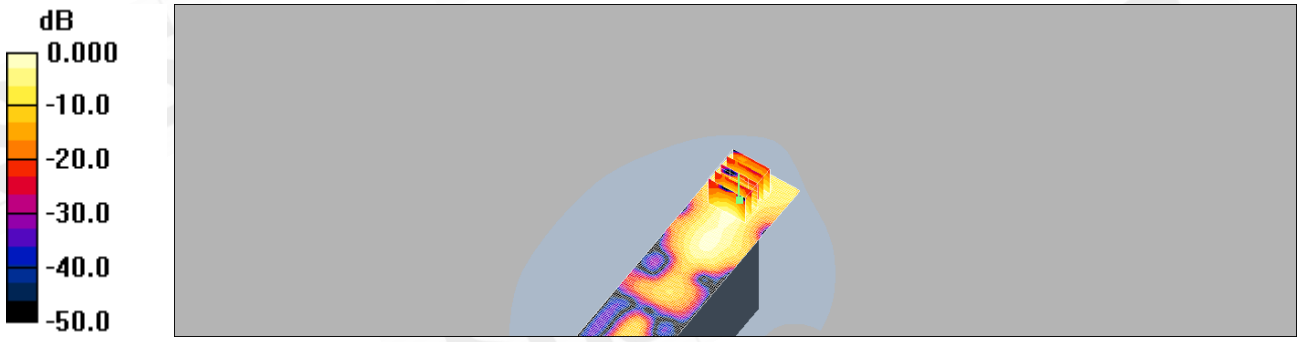

0 dB = 0.078mW/g

Unless otherwise stated the results shown in this test report refer only to the sample(s) tested and such sample(s) are retained for 90 days only.
除非另有說明，此報告結果僅對測試之樣品負責，同時此樣品僅保留90天。本報告未經本公司書面許可，不可部份複製。
This document is issued by the Company subject to its General Conditions of Service printed overleaf, available on request or accessible at www.sgs.com/terms_and_conditions.htm and, for electronic format documents, subject to Terms and Conditions for Electronic Documents at www.sgs.com/terms_e-document.htm. Attention is drawn to the limitation of liability, indemnification and jurisdiction issues defined therein. Any holder of this document is advised that information contained hereon reflects the Company's findings at the time of its intervention only and within the limits of Client's instructions, if any. The Company's sole responsibility is to its Client and this document does not exonerate parties to a transaction from exercising all their rights and obligations under the transaction documents. This document cannot be reproduced except in full, without prior written approval of the Company. Any unauthorized alteration, forgery or falsification of the content or appearance of this document is unlawful and offenders may be prosecuted to the fullest extent of the law.

Date: 2010/11/26

Primary Landscape mode_WLAN802.11 n(20M)_CH6

DUT: M02M;

Communication System: FCC_Wireless N(20M); Frequency: 2437 MHz;Duty Cycle: 1:1
Medium: Muscle 2450 Medium parameters used: f = 2437 MHz; σ = 2.01 mho/m; ε_r = 52; ρ = 1000 kg/m^3
Phantom section: Flat Section

DASY4 Configuration:

- Probe: ES3DV3 - SN3172; ConvF(4.11, 4.11, 4.11); Calibrated: 2010/5/21
- Sensor-Surface: 4mm (Mechanical Surface Detection)
- Electronics: DAE4 Sn547; Calibrated: 2010/8/18
- Phantom: SAM1; Type: SAM 4.0; Serial: TP:1419
- Measurement SW: DASY4, V4.7 Build 80; Postprocessing SW: SEMCAD, V1.8 Build 186

body/Area Scan (41x161x1): Measurement grid: dx=15mm, dy=15mm
Maximum value of SAR (interpolated) = 0.017 mW/g

body/Zoom Scan (5x5x7)/Cube 0: Measurement grid: dx=8mm, dy=8mm, dz=5mm
Reference Value = 1.16 V/m; Power Drift = 0.199 dB
Peak SAR (extrapolated) = 0.032 W/kg
SAR(1 g) = 0.016 mW/g; SAR(10 g) = 0.0088 mW/g
Maximum value of SAR (measured) = 0.018 mW/g

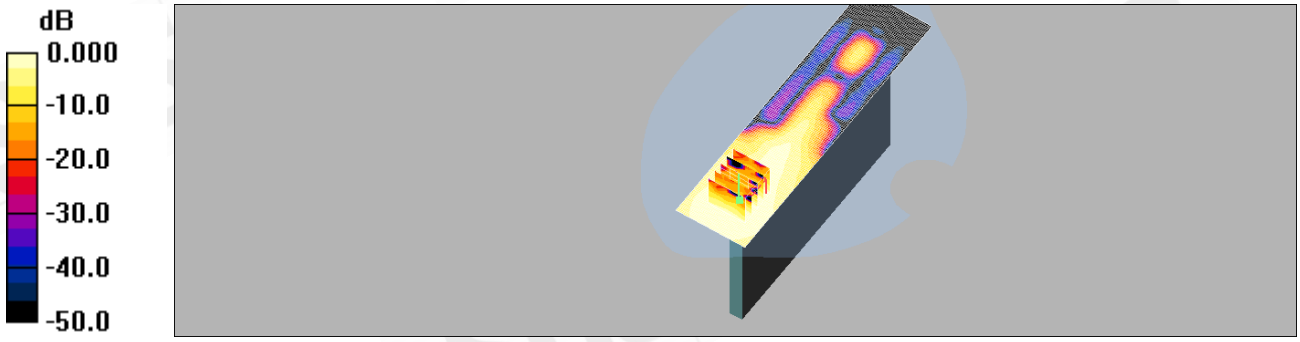

0 dB = 0.018mW/g

Unless otherwise stated the results shown in this test report refer only to the sample(s) tested and such sample(s) are retained for 90 days only.
除非另有說明，此報告結果僅對測試之樣品負責，同時此樣品僅保留90天。本報告未經本公司書面許可，不可部份複製。
This document is issued by the Company subject to its General Conditions of Service printed overleaf, available on request or accessible at www.sgs.com/terms_and_conditions.htm and, for electronic format documents, subject to Terms and Conditions for Electronic Documents at www.sgs.com/terms_e-document.htm. Attention is drawn to the limitation of liability, indemnification and jurisdiction issues defined therein. Any holder of this document is advised that information contained hereon reflects the Company's findings at the time of its intervention only and within the limits of Client's instructions, if any. The Company's sole responsibility is to its Client and this document does not exonerate parties to a transaction from exercising all their rights and obligations under the transaction documents. This document cannot be reproduced except in full, without prior written approval of the Company. Any unauthorized alteration, forgery or falsification of the content or appearance of this document is unlawful and offenders may be prosecuted to the fullest extent of the law.

5. SAR System Performance Verification

Date: 2010/12/2

DUT: Dipole 835 MHz;

Communication System: CW; Frequency: 835 MHz;Duty Cycle: 1:1
Medium: Muscle 900 MHz Medium parameters used: f = 835 MHz; σ = 0.974 mho/m; ε_r = 53.9; ρ = 1000 kg/m^3
Phantom section: Flat Section

DASY4 Configuration:

- Probe: ES3DV3 - SN3172; ConvF(5.84, 5.84, 5.84); Calibrated: 2010/5/21
- Sensor-Surface: 4mm (Mechanical Surface Detection)
- Electronics: DAE4 Sn547; Calibrated: 2010/8/18
- Phantom: SAM1; Type: SAM 4.0; Serial: TP:1419
- Measurement SW: DASY4, V4.7 Build 80; Postprocessing SW: SEMCAD, V1.8 Build 186

Pin=250mW/Area Scan (61x61x1): Measurement grid: dx=15mm, dy=15mm
Maximum value of SAR (interpolated) = 2.69 mW/g

Pin=250mW/Zoom Scan (7x7x7)/Cube 0: Measurement grid: dx=5mm, dy=5mm, dz=5mm
Reference Value = 53.4 V/m; Power Drift = 0.005 dB
Peak SAR (extrapolated) = 3.65 W/kg
SAR(1 g) = 2.5 mW/g; SAR(10 g) = 1.65 mW/g
Maximum value of SAR (measured) = 2.69 mW/g

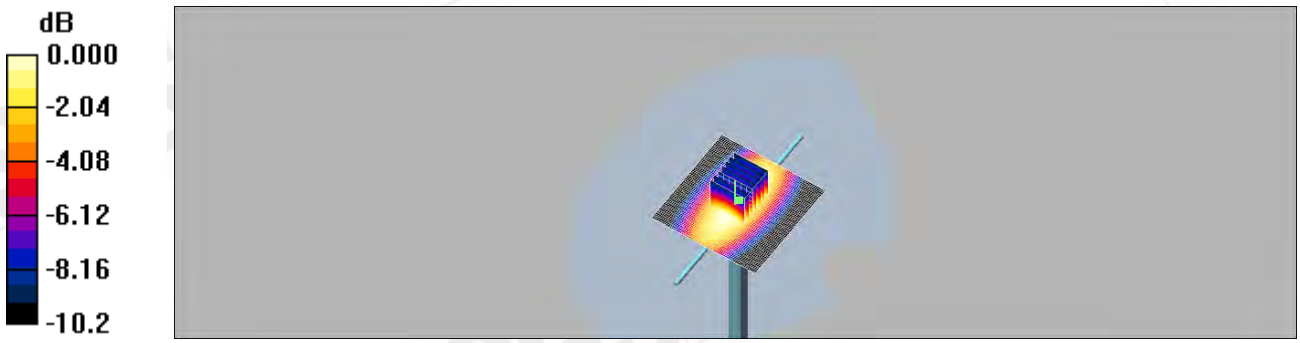

0 dB = 2.69mW/g

Unless otherwise stated the results shown in this test report refer only to the sample(s) tested and such sample(s) are retained for 90 days only.
除非另有說明，此報告結果僅對測試之樣品負責，同時此樣品僅保留90天。本報告未經本公司書面許可，不可部份複製。
This document is issued by the Company subject to its General Conditions of Service printed overleaf, available on request or accessible at www.sgs.com/terms_and_conditions.htm and, for electronic format documents, subject to Terms and Conditions for Electronic Documents at www.sgs.com/terms_e-document.htm. Attention is drawn to the limitation of liability, indemnification and jurisdiction issues defined therein. Any holder of this document is advised that information contained hereon reflects the Company's findings at the time of its intervention only and within the limits of Client's instructions, if any. The Company's sole responsibility is to its Client and this document does not exonerate parties to a transaction from exercising all their rights and obligations under the transaction documents. This document cannot be reproduced except in full, without prior written approval of the Company. Any unauthorized alteration, forgery or falsification of the content or appearance of this document is unlawful and offenders may be prosecuted to the fullest extent of the law.

Date: 2010/12/2

DUT: Dipole 1750 MHz;

Communication System: CW; Frequency: 1750 MHz;Duty Cycle: 1:1
Medium: M1800 & 1900 Medium parameters used: f = 1750 MHz; σ = 1.48 mho/m; ε_r = 53.2; ρ = 1000 kg/m^3
Phantom section: Flat Section

DASY4 Configuration:

- Probe: ES3DV3 - SN3172; ConvF(4.63, 4.63, 4.63); Calibrated: 2010/5/21
- Sensor-Surface: 4mm (Mechanical Surface Detection)
- Electronics: DAE4 Sn547; Calibrated: 2010/8/18
- Phantom: SAM1; Type: SAM 4.0; Serial: TP:1419
- Measurement SW: DASY4, V4.7 Build 80; Postprocessing SW: SEMCAD, V1.8 Build 186

Pin=250mW /Area Scan (61x61x1): Measurement grid: dx=15mm, dy=15mm
Maximum value of SAR (interpolated) = 11.7 mW/g

Pin=250mW /Zoom Scan (7x7x7)/Cube 0: Measurement grid: dx=5mm, dy=5mm, dz=5mm
Reference Value = 85.9 V/m; Power Drift = -0.056 dB
Peak SAR (extrapolated) = 17.4 W/kg
SAR(1 g) = 9.74 mW/g; SAR(10 g) = 5.21 mW/g
Maximum value of SAR (measured) = 11.0 mW/g

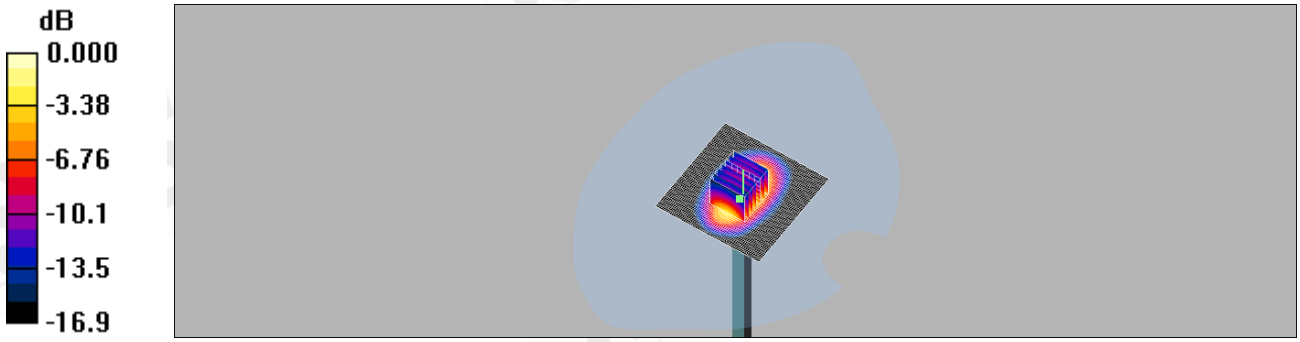

0 dB = 11.0mW/g

Unless otherwise stated the results shown in this test report refer only to the sample(s) tested and such sample(s) are retained for 90 days only.
除非另有說明，此報告結果僅對測試之樣品負責，同時此樣品僅保留90天。本報告未經本公司書面許可，不可部份複製。
This document is issued by the Company subject to its General Conditions of Service printed overleaf, available on request or accessible at www.sgs.com/terms_and_conditions.htm and, for electronic format documents, subject to Terms and Conditions for Electronic Documents at www.sgs.com/terms_e-document.htm. Attention is drawn to the limitation of liability, indemnification and jurisdiction issues defined therein. Any holder of this document is advised that information contained hereon reflects the Company's findings at the time of its intervention only and within the limits of Client's instructions, if any. The Company's sole responsibility is to its Client and this document does not exonerate parties to a transaction from exercising all their rights and obligations under the transaction documents. This document cannot be reproduced except in full, without prior written approval of the Company. Any unauthorized alteration, forgery or falsification of the content or appearance of this document is unlawful and offenders may be prosecuted to the fullest extent of the law.

Date: 2010/12/2

DUT: Dipole 1900 MHz;

Communication System: CW; Frequency: 1900 MHz;Duty Cycle: 1:1
Medium: M1800 & 1900 Medium parameters used: f = 1900 MHz; σ = 1.60 mho/m; ε_r = 52.6; ρ = 1000 kg/m^3
Phantom section: Flat Section

DASY4 Configuration:

- Probe: ES3DV3 - SN3172; ConvF(4.45, 4.45, 4.45); Calibrated: 2010/5/21
- Sensor-Surface: 4mm (Mechanical Surface Detection)
- Electronics: DAE4 Sn547; Calibrated: 2010/8/18
- Phantom: SAM1; Type: SAM 4.0; Serial: TP:1419
- Measurement SW: DASY4, V4.7 Build 80; Postprocessing SW: SEMCAD, V1.8 Build 186

Pin=250mW/Area Scan (51x61x1): Measurement grid: dx=15mm, dy=15mm
Maximum value of SAR (interpolated) = 14.0 mW/g

Pin=250mW/Zoom Scan (7x7x7)/Cube 0: Measurement grid: dx=5mm, dy=5mm, dz=5mm
Reference Value = 85.1 V/m; Power Drift = -0.139 dB
Peak SAR (extrapolated) = 17.9 W/kg
SAR(1 g) = 10.3 mW/g; SAR(10 g) = 5.49 mW/g
Maximum value of SAR (measured) = 11.7 mW/g

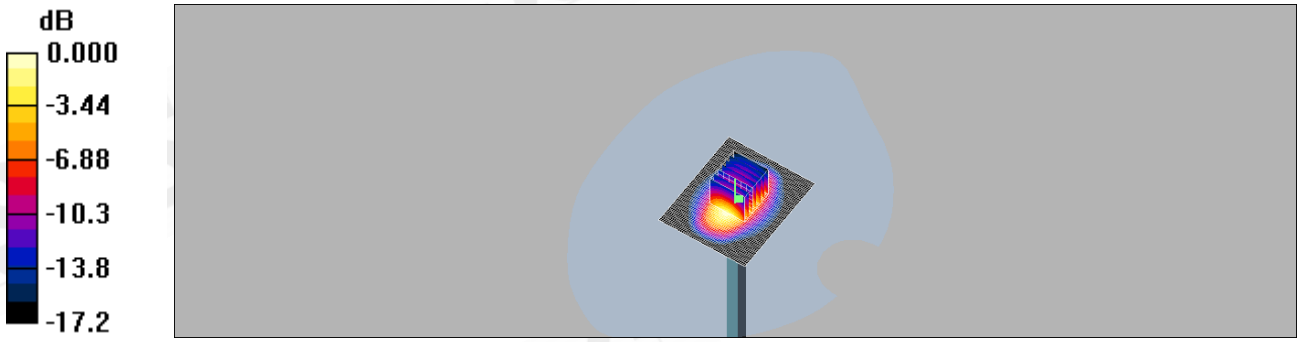

0 dB = 11.7mW/g

Unless otherwise stated the results shown in this test report refer only to the sample(s) tested and such sample(s) are retained for 90 days only.
除非另有說明，此報告結果僅對測試之樣品負責，同時此樣品僅保留90天。本報告未經本公司書面許可，不可部份複製。
This document is issued by the Company subject to its General Conditions of Service printed overleaf, available on request or accessible at www.sgs.com/terms_and_conditions.htm and, for electronic format documents, subject to Terms and Conditions for Electronic Documents at www.sgs.com/terms_e-document.htm. Attention is drawn to the limitation of liability, indemnification and jurisdiction issues defined therein. Any holder of this document is advised that information contained hereon reflects the Company's findings at the time of its intervention only and within the limits of Client's instructions, if any. The Company's sole responsibility is to its Client and this document does not exonerate parties to a transaction from exercising all their rights and obligations under the transaction documents. This document cannot be reproduced except in full, without prior written approval of the Company. Any unauthorized alteration, forgery or falsification of the content or appearance of this document is unlawful and offenders may be prosecuted to the fullest extent of the law.

DUT: Dipole 2450 MHz;

Communication System: CW; Frequency: 2450 MHz;Duty Cycle: 1:1
Medium: M 2450 Medium parameters used: f = 2450 MHz; σ = 2.03 mho/m; ε_r = 51.9; ρ = 1000 kg/m^3
Phantom section: Flat Section

DASY4 Configuration:

- Probe: ES3DV3 - SN3172; ConvF(4.11, 4.11, 4.11); Calibrated: 2010/5/21
- Sensor-Surface: 4mm (Mechanical Surface Detection)
- Electronics: DAE4 Sn547; Calibrated: 2010/8/18
- Phantom: SAM1; Type: SAM 4.0; Serial: TP:1419
- Measurement SW: DASY4, V4.7 Build 80; Postprocessing SW: SEMCAD, V1.8 Build 186

Pin=250mW/Area Scan (51x61x1): Measurement grid: dx=15mm, dy=15mm
Maximum value of SAR (interpolated) = 20.4 mW/g

Pin=250mW/Zoom Scan (7x7x7)/Cube 0: Measurement grid: dx=5mm, dy=5mm, dz=5mm
Reference Value = 91.5 V/m; Power Drift = -0.014 dB
Peak SAR (extrapolated) = 31.5 W/kg
SAR(1 g) = 13.7 mW/g; SAR(10 g) = 6.49 mW/g
Maximum value of SAR (measured) = 16.8 mW/g

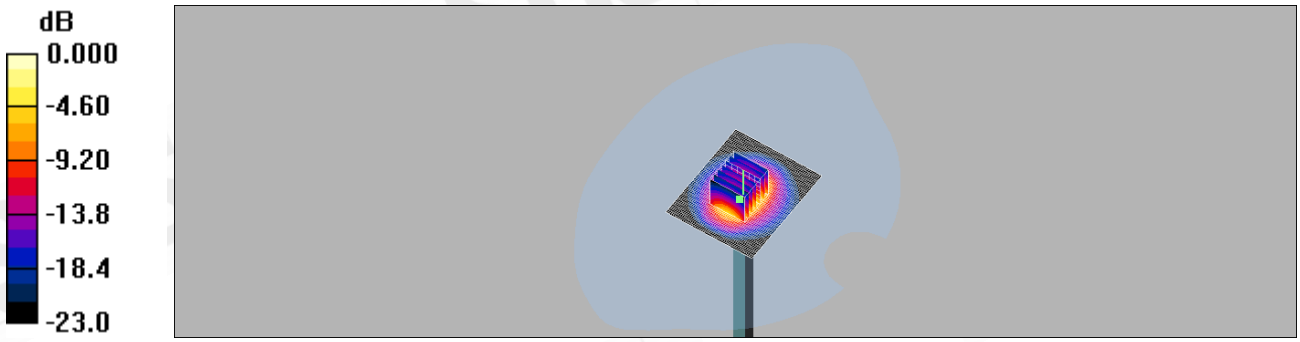

0 dB = 16.8mW/g

Unless otherwise stated the results shown in this test report refer only to the sample(s) tested and such sample(s) are retained for 90 days only.
除非另有說明，此報告結果僅對測試之樣品負責，同時此樣品僅保留90天。本報告未經本公司書面許可，不可部份複製。
This document is issued by the Company subject to its General Conditions of Service printed overleaf, available on request or accessible at www.sgs.com/terms_and_conditions.htm and, for electronic format documents, subject to Terms and Conditions for Electronic Documents at www.sgs.com/terms_e-document.htm. Attention is drawn to the limitation of liability, indemnification and jurisdiction issues defined therein. Any holder of this document is advised that information contained hereon reflects the Company's findings at the time of its intervention only and within the limits of Client's instructions, if any. The Company's sole responsibility is to its Client and this document does not exonerate parties to a transaction from exercising all their rights and obligations under the transaction documents. This document cannot be reproduced except in full, without prior written approval of the Company. Any unauthorized alteration, forgery or falsification of the content or appearance of this document is unlawful and offenders may be prosecuted to the fullest extent of the law.

6. DAE & Probe Calibration certificate

Calibration Laboratory of
Schmid & Partner
Engineering AG
Zeughausstrasse 43, 8004 Zurich, Switzerland

S Schweizerischer Kalibrierdienst
C Service suisse d'étalonnage
Servizio svizzero di taratura
S Swiss Calibration Service

Accredited by the Swiss Accreditation Service (SAS)
The Swiss Accreditation Service is one of the signatories to the EA Multilateral Agreement for the recognition of calibration certificates

Accreditation No.: SCS 108

Client **SGS-TW**

Certificate No: DAE4-547_Aug10

CALIBRATION CERTIFICATE

Object	DAE4 - SD 000 D04 BJ - SN: 547
Calibration procedure(s)	QA CAL-06.v22 Calibration procedure for the data acquisition electronics (DAE)
Calibration date:	August 18, 2010

This calibration certificate documents the traceability to national standards, which realize the physical units of measurements (SI).
The measurements and the uncertainties with confidence probability are given on the following pages and are part of the certificate.

All calibrations have been conducted in the closed laboratory facility: environment temperature (22 ± 3)°C and humidity < 70%.

Calibration Equipment used (M&TE critical for calibration)

Primary Standards	ID #	Cal Date (Certificate No.)	Scheduled Calibration
Keithley Multimeter Type 2001	SN: 0810278	1-Oct-09 (No: 9055)	Oct-10
Secondary Standards	**ID #**	**Check Date (in house)**	**Scheduled Check**
Calibrator Box V1.1	SE UMS 006 AB 1004	07-Jun-10 (in house check)	In house check: Jun-11

	Name	Function	Signature
Calibrated by:	Dominique Steffen	Technician	
Approved by:	Fin Bomholt	R&D Director	i.V.

Issued: August 18, 2010

This calibration certificate shall not be reproduced except in full without written approval of the laboratory.

Certificate No: DAE4-547_Aug10 Page 1 of 5

Unless otherwise stated the results shown in this test report refer only to the sample(s) tested and such sample(s) are retained for 90 days only.
除非另有說明，此報告結果僅對測試之樣品負責，同時此樣品僅保留90天。本報告未經本公司書面許可，不可部份複製。
This document is issued by the Company subject to its General Conditions of Service printed overleaf, available on request or accessible at www.sgs.com/terms_and_conditions.htm and, for electronic format documents, subject to Terms and Conditions for Electronic Documents at www.sgs.com/terms_e-document.htm. Attention is drawn to the limitation of liability, indemnification and jurisdiction issues defined therein. Any holder of this document is advised that information contained hereon reflects the Company's findings at the time of its intervention only and within the limits of Client's instructions, if any. The Company's sole responsibility is to its Client and this document does not exonerate parties to a transaction from exercising all their rights and obligations under the transaction documents. This document cannot be reproduced except in full, without prior written approval of the Company. Any unauthorized alteration, forgery or falsification of the content or appearance of this document is unlawful and offenders may be prosecuted to the fullest extent of the law.

Calibration Laboratory of
Schmid & Partner
Engineering AG
Zeughausstrasse 43, 8004 Zurich, Switzerland

S Schweizerischer Kalibrierdienst
C Service suisse d'étalonnage
Servizio svizzero di taratura
S Swiss Calibration Service

Accredited by the Swiss Accreditation Service (SAS)
The Swiss Accreditation Service is one of the signatories to the EA Multilateral Agreement for the recognition of calibration certificates

Accreditation No.: **SCS 108**

Client **SGS-TW (Auden)**

Certificate No: **ES3-3172_May10**

CALIBRATION CERTIFICATE

Object	ES3DV3 - SN:3172
Calibration procedure(s)	QA CAL-01.v6, QA CAL-14.v3, QA CAL-23.v3 and QA CAL-25.v2 Calibration procedure for dosimetric E-field probes
Calibration date:	May 21, 2010

This calibration certificate documents the traceability to national standards, which realize the physical units of measurements (SI).
The measurements and the uncertainties with confidence probability are given on the following pages and are part of the certificate.

All calibrations have been conducted in the closed laboratory facility: environment temperature (22 ± 3)°C and humidity < 70%.

Calibration Equipment used (M&TE critical for calibration)

Primary Standards	ID #	Cal Date (Certificate No.)	Scheduled Calibration
Power meter E4419B	GB41293874	1-Apr-10 (No. 217-01136)	Apr-11
Power sensor E4412A	MY41495277	1-Apr-10 (No. 217-01136)	Apr-11
Power sensor E4412A	MY41498087	1-Apr-10 (No. 217-01136)	Apr-11
Reference 3 dB Attenuator	SN: S5054 (3c)	30-Mar-10 (No. 217-01159)	Mar-11
Reference 20 dB Attenuator	SN: S5086 (20b)	30-Mar-10 (No. 217-01161)	Mar-11
Reference 30 dB Attenuator	SN: S5129 (30b)	30-Mar-10 (No. 217-01160)	Mar-11
Reference Probe ES3DV2	SN: 3013	30-Dec-09 (No. ES3-3013_Dec09)	Dec-10
DAE4	SN: 660	20-Apr-10 (No. DAE4-660_Apr10)	Apr-11

Secondary Standards	ID #	Check Date (in house)	Scheduled Check
RF generator HP 8648C	US3642U01700	4-Aug-99 (in house check Oct-09)	In house check: Oct-11
Network Analyzer HP 8753E	US37390585	18-Oct-01 (in house check Oct-09)	In house check: Oct10

	Name	Function	Signature
Calibrated by:	Katja Pokovic	Technical Manager	
Approved by:	Niels Kuster	Quality Manager	

Issued: May 22, 2010

This calibration certificate shall not be reproduced except in full without written approval of the laboratory.

Unless otherwise stated the results shown in this test report refer only to the sample(s) tested and such sample(s) are retained for 90 days only.
除非另有說明，此報告結果僅對測試之樣品負責，同時此樣品僅保留90天。本報告未經本公司書面許可，不可部份複製。
This document is issued by the Company subject to its General Conditions of Service printed overleaf, available on request or accessible at www.sgs.com/terms_and_conditions.htm and, for electronic format documents, subject to Terms and Conditions for Electronic Documents at www.sgs.com/terms_e-document.htm. Attention is drawn to the limitation of liability, indemnification and jurisdiction issues defined therein. Any holder of this document is advised that information contained hereon reflects the Company's findings at the time of its intervention only and within the limits of Client's instructions, if any. The Company's sole responsibility is to its Client and this document does not exonerate parties to a transaction from exercising all their rights and obligations under the transaction documents. This document cannot be reproduced except in full, without prior written approval of the Company. Any unauthorized alteration, forgery or falsification of the content or appearance of this document is unlawful and offenders may be prosecuted to the fullest extent of the law.

Calibration Laboratory of
Schmid & Partner
Engineering AG
Zeughausstrasse 43, 8004 Zurich, Switzerland

S Schweizerischer Kalibrierdienst
C Service suisse d'étalonnage
Servizio svizzero di taratura
S Swiss Calibration Service

Accredited by the Swiss Accreditation Service (SAS)
The Swiss Accreditation Service is one of the signatories to the EA Multilateral Agreement for the recognition of calibration certificates

Accreditation No.: SCS 108

Glossary:

TSL	tissue simulating liquid
NORMx,y,z	sensitivity in free space
ConvF	sensitivity in TSL / NORMx,y,z
DCP	diode compression point
CF	crest factor (1/duty_cycle) of the RF signal
A, B, C	modulation dependent linearization parameters
Polarization φ	φ rotation around probe axis
Polarization ϑ	ϑ rotation around an axis that is in the plane normal to probe axis (at measurement center), i.e., ϑ = 0 is normal to probe axis

Calibration is Performed According to the Following Standards:

a) IEEE Std 1528-2003, "IEEE Recommended Practice for Determining the Peak Spatial-Averaged Specific Absorption Rate (SAR) in the Human Head from Wireless Communications Devices: Measurement Techniques", December 2003
b) IEC 62209-1, "Procedure to measure the Specific Absorption Rate (SAR) for hand-held devices used in close proximity to the ear (frequency range of 300 MHz to 3 GHz)", February 2005

Methods Applied and Interpretation of Parameters:

- *NORMx,y,z:* Assessed for E-field polarization ϑ = 0 (f ≤ 900 MHz in TEM-cell; f > 1800 MHz: R22 waveguide). NORMx,y,z are only intermediate values, i.e., the uncertainties of NORMx,y,z does not effect the E^2-field uncertainty inside TSL (see below *ConvF*).
- *NORM(f)x,y,z = NORMx,y,z * frequency_response* (see Frequency Response Chart). This linearization is implemented in DASY4 software versions later than 4.2. The uncertainty of the frequency response is included in the stated uncertainty of *ConvF*.
- *DCPx,y,z:* DCP are numerical linearization parameters assessed based on the data of power sweep with CW signal (no uncertainty required). DCP does not depend on frequency nor media.
- *Ax,y,z; Bx,y,z; Cx,y,z, VRx,y,z: A, B, C* are numerical linearization parameters assessed based on the data of power sweep for specific modulation signal. The parameters do not depend on frequency nor media. *VR* is the maximum calibration range expressed in RMS voltage across the diode.
- *ConvF and Boundary Effect Parameters:* Assessed in flat phantom using E-field (or Temperature Transfer Standard for f ≤ 800 MHz) and inside waveguide using analytical field distributions based on power measurements for f > 800 MHz. The same setups are used for assessment of the parameters applied for boundary compensation (alpha, depth) of which typical uncertainty values are given. These parameters are used in DASY4 software to improve probe accuracy close to the boundary. The sensitivity in TSL corresponds to *NORMx,y,z * ConvF* whereby the uncertainty corresponds to that given for *ConvF*. A frequency dependent *ConvF* is used in DASY version 4.4 and higher which allows extending the validity from ± 50 MHz to ± 100 MHz.
- *Spherical isotropy (3D deviation from isotropy)*: in a field of low gradients realized using a flat phantom exposed by a patch antenna.
- *Sensor Offset*: The sensor offset corresponds to the offset of virtual measurement center from the probe tip (on probe axis). No tolerance required.

Unless otherwise stated the results shown in this test report refer only to the sample(s) tested and such sample(s) are retained for 90 days only.
除非另有說明，此報告結果僅對測試之樣品負責，同時此樣品僅保留90天。本報告未經本公司書面許可，不可部份複製。
This document is issued by the Company subject to its General Conditions of Service printed overleaf, available on request or accessible at www.sgs.com/terms_and_conditions.htm and, for electronic format documents, subject to Terms and Conditions for Electronic Documents at www.sgs.com/terms_e-document.htm. Attention is drawn to the limitation of liability, indemnification and jurisdiction issues defined therein. Any holder of this document is advised that information contained hereon reflects the Company's findings at the time of its intervention only and within the limits of Client's instructions, if any. The Company's sole responsibility is to its Client and this document does not exonerate parties to a transaction from exercising all their rights and obligations under the transaction documents. This document cannot be reproduced except in full, without prior written approval of the Company. Any unauthorized alteration, forgery or falsification of the content or appearance of this document is unlawful and offenders may be prosecuted to the fullest extent of the law.

Probe ES3DV3

SN:3172

Manufactured:	January 23, 2008
Last calibrated:	May 27, 2009
Recalibrated:	May 21, 2010

Calibrated for DASY/EASY Systems

(Note: non-compatible with DASY2 system!)

Unless otherwise stated the results shown in this test report refer only to the sample(s) tested and such sample(s) are retained for 90 days only.
除非另有說明，此報告結果僅對測試之樣品負責，同時此樣品僅保留90天。本報告未經本公司書面許可，不可部份複製。
This document is issued by the Company subject to its General Conditions of Service printed overleaf, available on request or accessible at www.sgs.com/terms_and_conditions.htm and, for electronic format documents, subject to Terms and Conditions for Electronic Documents at www.sgs.com/terms_e-document.htm. Attention is drawn to the limitation of liability, indemnification and jurisdiction issues defined therein. Any holder of this document is advised that information contained hereon reflects the Company's findings at the time of its intervention only and within the limits of Client's instructions, if any. The Company's sole responsibility is to its Client and this document does not exonerate parties to a transaction from exercising all their rights and obligations under the transaction documents. This document cannot be reproduced except in full, without prior written approval of the Company. Any unauthorized alteration, forgery or falsification of the content or appearance of this document is unlawful and offenders may be prosecuted to the fullest extent of the law.

ES3DV3 SN:3172 May 21, 2010

DASY/EASY - Parameters of Probe: ES3DV3 SN:3172

Basic Calibration Parameters

	Sensor X	Sensor Y	Sensor Z	Unc (k=2)
Norm ($\mu V/(V/m)^2$)[A]	1.37	1.19	0.97	± 10.1%
DCP (mV)[B]	93.9	92.5	93.2	

Modulation Calibration Parameters

UID	Communication System Name	PAR		A dB	B dBuV	C	VR mV	Unc[E] (k=2)
10000	CW	0.00	X	0.00	0.00	1.00	300.0	± 1.5%
			Y	0.00	0.00	1.00	300.0	
			Z	0.00	0.00	1.00	300.0	

The reported uncertainty of measurement is stated as the standard uncertainty of measurement multiplied by the coverage factor k=2, which for a normal distribution corresponds to a coverage probability of approximately 95%.

[A] The uncertainties of NormX,Y,Z do not affect the E^2-field uncertainty inside TSL (see Pages 5 and 6).
[B] Numerical linearization parameter: uncertainty not required.
[E] Uncertainty is determined using the maximum deviation from linear response applying recatangular distribution and is expressed for the square of the field value.

Unless otherwise stated the results shown in this test report refer only to the sample(s) tested and such sample(s) are retained for 90 days only.
除非另有說明，此報告結果僅對測試之樣品負責，同時此樣品僅保留90天。本報告未經本公司書面許可，不可部份複製。
This document is issued by the Company subject to its General Conditions of Service printed overleaf, available on request or accessible at www.sgs.com/terms_and_conditions.htm and, for electronic format documents, subject to Terms and Conditions for Electronic Documents at www.sgs.com/terms_e-document.htm. Attention is drawn to the limitation of liability, indemnification and jurisdiction issues defined therein. Any holder of this document is advised that information contained hereon reflects the Company's findings at the time of its intervention only and within the limits of Client's instructions, if any. The Company's sole responsibility is to its Client and this document does not exonerate parties to a transaction from exercising all their rights and obligations under the transaction documents. This document cannot be reproduced except in full, without prior written approval of the Company. Any unauthorized alteration, forgery or falsification of the content or appearance of this document is unlawful and offenders may be prosecuted to the fullest extent of the law.

SGS Taiwan Ltd. 台灣檢驗科技股份有限公司
No.134, Wu Kung Road, Wuku Industrial Zone, Taipei County, Taiwan / 台北縣五股工業區五工路 134 號
t (886-2) 2299-3279 f (886-2) 2298-0488 www.tw.sgs.com
Member of SGS Group

DASY/EASY - Parameters of Probe: ES3DV3 SN:3172

Calibration Parameter Determined in Head Tissue Simulating Media

f [MHz]	Validity [MHz][C]	Permittivity	Conductivity	ConvF X	ConvF Y	ConvF Z	Alpha	Depth	Unc (k=2)
835	± 50 / ± 100	41.5 ± 5%	0.90 ± 5%	5.85	5.85	5.85	0.76	1.14	± 11.0%
900	± 50 / ± 100	41.5 ± 5%	0.97 ± 5%	5.75	5.75	5.75	0.87	1.08	± 11.0%
1750	± 50 / ± 100	40.1 ± 5%	1.37 ± 5%	5.04	5.04	5.04	0.31	1.82	± 11.0%
1900	± 50 / ± 100	40.0 ± 5%	1.40 ± 5%	4.89	4.89	4.89	0.50	1.46	± 11.0%
2000	± 50 / ± 100	40.0 ± 5%	1.40 ± 5%	4.73	4.73	4.73	0.49	1.44	± 11.0%
2450	± 50 / ± 100	39.2 ± 5%	1.80 ± 5%	4.32	4.32	4.32	0.42	1.70	± 11.0%

[C] The validity of ± 100 MHz only applies for DASY v4.4 and higher (see Page 2). The uncertainty is the RSS of the ConvF uncertainty at calibration frequency and the uncertainty for the indicated frequency band.

Unless otherwise stated the results shown in this test report refer only to the sample(s) tested and such sample(s) are retained for 90 days only.
除非另有說明，此報告結果僅對測試之樣品負責，同時此樣品僅保留90天。本報告未經本公司書面許可，不可部份複製。
This document is issued by the Company subject to its General Conditions of Service printed overleaf, available on request or accessible at www.sgs.com/terms_and_conditions.htm and, for electronic format documents, subject to Terms and Conditions for Electronic Documents at www.sgs.com/terms_e-document.htm. Attention is drawn to the limitation of liability, indemnification and jurisdiction issues defined therein. Any holder of this document is advised that information contained hereon reflects the Company's findings at the time of its intervention only and within the limits of Client's instructions, if any. The Company's sole responsibility is to its Client and this document does not exonerate parties to a transaction from exercising all their rights and obligations under the transaction documents. This document cannot be reproduced except in full, without prior written approval of the Company. Any unauthorized alteration, forgery or falsification of the content or appearance of this document is unlawful and offenders may be prosecuted to the fullest extent of the law.

SGS Taiwan Ltd. 台灣檢驗科技股份有限公司
No.134, Wu Kung Road, Wuku Industrial Zone, Taipei County, Taiwan / 台北縣五股工業區五工路 134 號
t (886-2) 2299-3279 f (886-2) 2298-0488 www.tw.sgs.com
Member of SGS Group

DASY/EASY - Parameters of Probe: ES3DV3 SN:3172

Calibration Parameter Determined in Body Tissue Simulating Media

f [MHz]	Validity [MHz][C]	Permittivity	Conductivity	ConvF X	ConvF Y	ConvF Z	Alpha	Depth	Unc (k=2)
835	± 50 / ± 100	55.2 ± 5%	0.97 ± 5%	5.84	5.84	5.84	0.81	1.19	± 11.0%
900	± 50 / ± 100	55.0 ± 5%	1.05 ± 5%	5.75	5.75	5.75	0.73	1.24	± 11.0%
1750	± 50 / ± 100	53.4 ± 5%	1.49 ± 5%	4.63	4.63	4.63	0.39	1.75	± 11.0%
1900	± 50 / ± 100	53.3 ± 5%	1.52 ± 5%	4.45	4.45	4.45	0.32	2.36	± 11.0%
2000	± 50 / ± 100	53.3 ± 5%	1.52 ± 5%	4.47	4.47	4.47	0.32	2.44	± 11.0%
2450	± 50 / ± 100	52.7 ± 5%	1.95 ± 5%	4.11	4.11	4.11	0.82	1.17	± 11.0%
2600	± 50 / ± 100	52.5 ± 5%	2.16 ± 5%	3.99	3.99	3.99	0.95	1.09	± 11.0%
3500	± 50 / ± 100	51.3 ± 5%	3.31 ± 5%	3.28	3.28	3.28	1.00	1.28	± 13.1%

[C] The validity of ± 100 MHz only applies for DASY v4.4 and higher (see Page 2). The uncertainty is the RSS of the ConvF uncertainty at calibration frequency and the uncertainty for the indicated frequency band.

Unless otherwise stated the results shown in this test report refer only to the sample(s) tested and such sample(s) are retained for 90 days only.
除非另有說明，此報告結果僅對測試之樣品負責，同時此樣品僅保留90天。本報告未經本公司書面許可，不可部份複製。
This document is issued by the Company subject to its General Conditions of Service printed overleaf, available on request or accessible at www.sgs.com/terms_and_conditions.htm and, for electronic format documents, subject to Terms and Conditions for Electronic Documents at www.sgs.com/terms_e-document.htm. Attention is drawn to the limitation of liability, indemnification and jurisdiction issues defined therein. Any holder of this document is advised that information contained hereon reflects the Company's findings at the time of its intervention only and within the limits of Client's instructions, if any. The Company's sole responsibility is to its Client and this document does not exonerate parties to a transaction from exercising all their rights and obligations under the transaction documents. This document cannot be reproduced except in full, without prior written approval of the Company. Any unauthorized alteration, forgery or falsification of the content or appearance of this document is unlawful and offenders may be prosecuted to the fullest extent of the law.

SGS Taiwan Ltd. 台灣檢驗科技股份有限公司
No.134, Wu Kung Road, Wuku Industrial Zone, Taipei County, Taiwan / 台北縣五股工業區五工路 134 號
t (886-2) 2299-3279 f (886-2) 2298-0488 www.tw.sgs.com
Member of SGS Group

ES3DV3 SN:3172 May 21, 2010

Frequency Response of E-Field

(TEM-Cell:ifi110 EXX, Waveguide: R22)

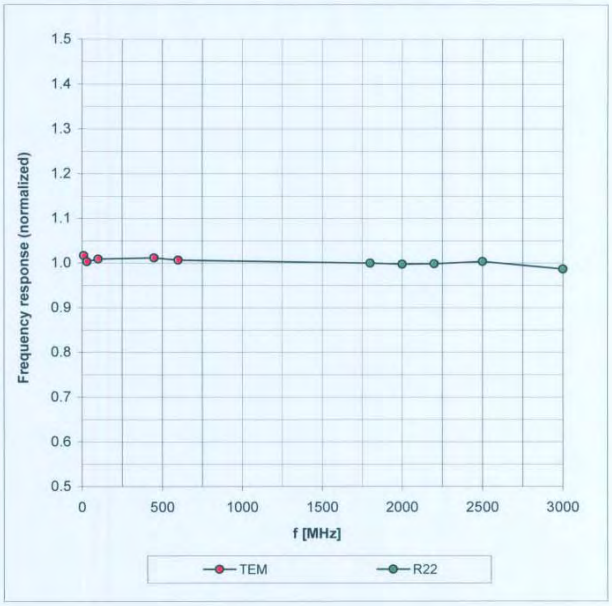

Uncertainty of Frequency Response of E-field: ± 6.3% (k=2)

Unless otherwise stated the results shown in this test report refer only to the sample(s) tested and such sample(s) are retained for 90 days only.
除非另有說明，此報告結果僅對測試之樣品負責，同時此樣品僅保留90天。本報告未經本公司書面許可，不可部份複製。
This document is issued by the Company subject to its General Conditions of Service printed overleaf, available on request or accessible at www.sgs.com/terms_and_conditions.htm and, for electronic format documents, subject to Terms and Conditions for Electronic Documents at www.sgs.com/terms_e-document.htm. Attention is drawn to the limitation of liability, indemnification and jurisdiction issues defined therein. Any holder of this document is advised that information contained hereon reflects the Company's findings at the time of its intervention only and within the limits of Client's instructions, if any. The Company's sole responsibility is to its Client and this document does not exonerate parties to a transaction from exercising all their rights and obligations under the transaction documents. This document cannot be reproduced except in full, without prior written approval of the Company. Any unauthorized alteration, forgery or falsification of the content or appearance of this document is unlawful and offenders may be prosecuted to the fullest extent of the law.

SGS Taiwan Ltd. 台灣檢驗科技股份有限公司
No.134, Wu Kung Road, Wuku Industrial Zone, Taipei County, Taiwan / 台北縣五股工業區五工路 134 號
t (886-2) 2299-3279 f (886-2) 2298-0488 www.tw.sgs.com
Member of SGS Group

ES3DV3 SN:3172 May 21, 2010

Receiving Pattern (ϕ), ϑ = 0°

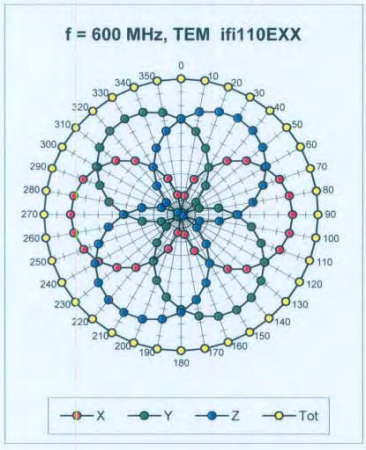

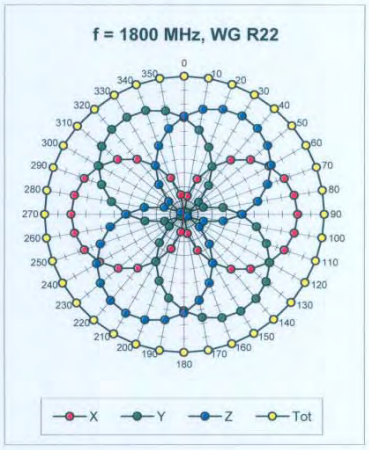

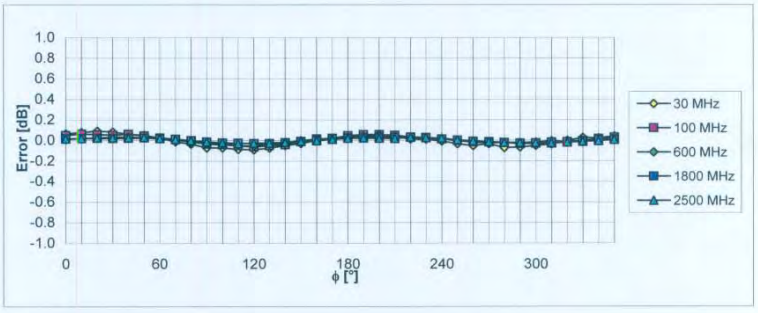

Uncertainty of Axial Isotropy Assessment: ± 0.5% (k=2)

Certificate No: ES3-3172_May10 Page 8 of 11

Unless otherwise stated the results shown in this test report refer only to the sample(s) tested and such sample(s) are retained for 90 days only.
除非另有說明，此報告結果僅對測試之樣品負責，同時此樣品僅保留90天。本報告未經本公司書面許可，不可部份複製。
This document is issued by the Company subject to its General Conditions of Service printed overleaf, available on request or accessible at www.sgs.com/terms_and_conditions.htm and, for electronic format documents, subject to Terms and Conditions for Electronic Documents at www.sgs.com/terms_e-document.htm. Attention is drawn to the limitation of liability, indemnification and jurisdiction issues defined therein. Any holder of this document is advised that information contained hereon reflects the Company's findings at the time of its intervention only and within the limits of Client's instructions, if any. The Company's sole responsibility is to its Client and this document does not exonerate parties to a transaction from exercising all their rights and obligations under the transaction documents. This document cannot be reproduced except in full, without prior written approval of the Company. Any unauthorized alteration, forgery or falsification of the content or appearance of this document is unlawful and offenders may be prosecuted to the fullest extent of the law.

ES3DV3 SN:3172 May 21, 2010

Dynamic Range f(SAR_{head})

(Waveguide R22, f = 1800 MHz)

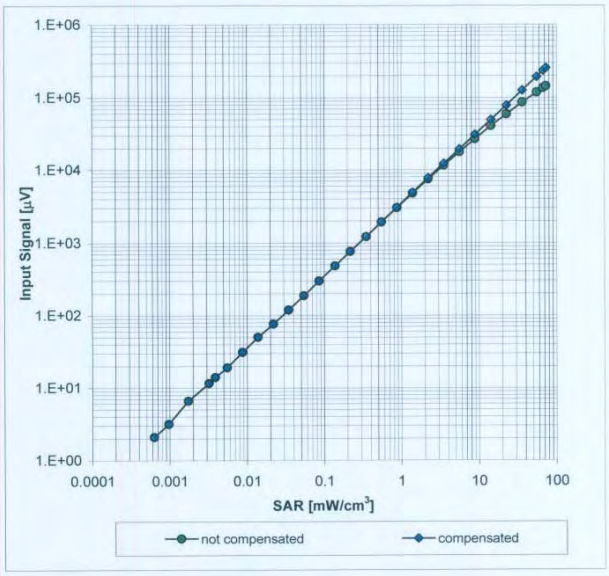

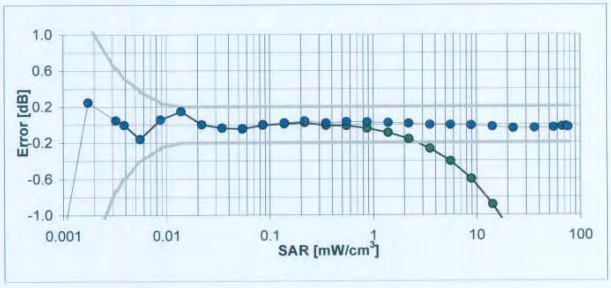

Uncertainty of Linearity Assessment: ± 0.6% (k=2)

Certificate No: ES3-3172_May10 Page 9 of 11

Unless otherwise stated the results shown in this test report refer only to the sample(s) tested and such sample(s) are retained for 90 days only.
除非另有說明，此報告結果僅對測試之樣品負責，同時此樣品僅保留90天。本報告未經本公司書面許可，不可部份複製。
This document is issued by the Company subject to its General Conditions of Service printed overleaf, available on request or accessible at www.sgs.com/terms_and_conditions.htm and, for electronic format documents, subject to Terms and Conditions for Electronic Documents at www.sgs.com/terms_e-document.htm. Attention is drawn to the limitation of liability, indemnification and jurisdiction issues defined therein. Any holder of this document is advised that information contained hereon reflects the Company's findings at the time of its intervention only and within the limits of Client's instructions, if any. The Company's sole responsibility is to its Client and this document does not exonerate parties to a transaction from exercising all their rights and obligations under the transaction documents. This document cannot be reproduced except in full, without prior written approval of the Company. Any unauthorized alteration, forgery or falsification of the content or appearance of this document is unlawful and offenders may be prosecuted to the fullest extent of the law.

ES3DV3 SN:3172 May 21, 2010

Conversion Factor Assessment

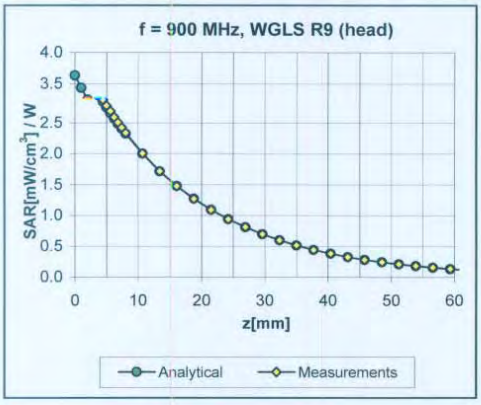

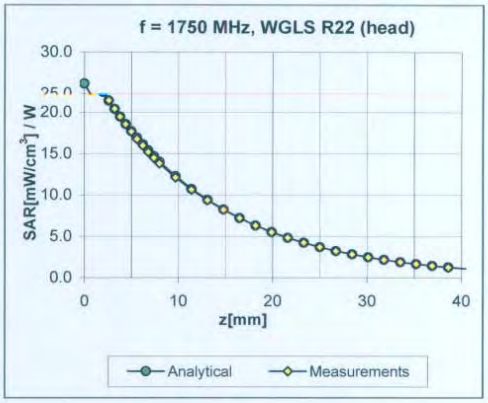

Error (ϕ, ϑ), f = 900 MHz

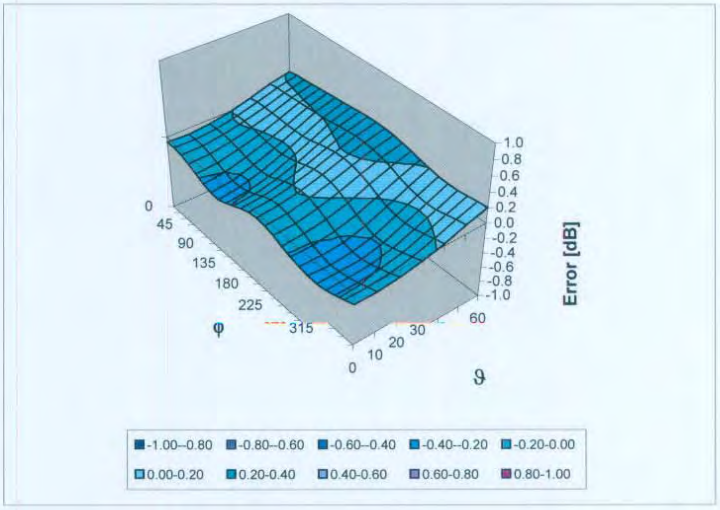

Uncertainty of Spherical Isotropy Assessment: ± 2.6% (k=2)

Certificate No: ES3-3172_May10 Page 10 of 11

Unless otherwise stated the results shown in this test report refer only to the sample(s) tested and such sample(s) are retained for 90 days only.
除非另有說明，此報告結果僅對測試之樣品負責，同時此樣品僅保留90天。本報告未經本公司書面許可，不可部份複製。
This document is issued by the Company subject to its General Conditions of Service printed overleaf, available on request or accessible at www.sgs.com/terms_and_conditions.htm and, for electronic format documents, subject to Terms and Conditions for Electronic Documents at www.sgs.com/terms_e-document.htm. Attention is drawn to the limitation of liability, indemnification and jurisdiction issues defined therein. Any holder of this document is advised that information contained hereon reflects the Company's findings at the time of its intervention only and within the limits of Client's instructions, if any. The Company's sole responsibility is to its Client and this document does not exonerate parties to a transaction from exercising all their rights and obligations under the transaction documents. This document cannot be reproduced except in full, without prior written approval of the Company. Any unauthorized alteration, forgery or falsification of the content or appearance of this document is unlawful and offenders may be prosecuted to the fullest extent of the law.

Other Probe Parameters

Sensor Arrangement	Triangular
Connector Angle (°)	Not applicable
Mechanical Surface Detection Mode	enabled
Optical Surface Detection Mode	disabled
Probe Overall Length	337 mm
Probe Body Diameter	10 mm
Tip Length	10 mm
Tip Diameter	4.0 mm
Probe Tip to Sensor X Calibration Point	2 mm
Probe Tip to Sensor Y Calibration Point	2 mm
Probe Tip to Sensor Z Calibration Point	2 mm
Recommended Measurement Distance from Surface	3 mm

Unless otherwise stated the results shown in this test report refer only to the sample(s) tested and such sample(s) are retained for 90 days only.
除非另有說明，此報告結果僅對測試之樣品負責，同時此樣品僅保留90天。本報告未經本公司書面許可，不可部份複製。
This document is issued by the Company subject to its General Conditions of Service printed overleaf, available on request or accessible at www.sgs.com/terms_and_conditions.htm and, for electronic format documents, subject to Terms and Conditions for Electronic Documents at www.sgs.com/terms_e-document.htm. Attention is drawn to the limitation of liability, indemnification and jurisdiction issues defined therein. Any holder of this document is advised that information contained hereon reflects the Company's findings at the time of its intervention only and within the limits of Client's instructions, if any. The Company's sole responsibility is to its Client and this document does not exonerate parties to a transaction from exercising all their rights and obligations under the transaction documents. This document cannot be reproduced except in full, without prior written approval of the Company. Any unauthorized alteration, forgery or falsification of the content or appearance of this document is unlawful and offenders may be prosecuted to the fullest extent of the law.

SGS Taiwan Ltd. 台灣檢驗科技股份有限公司
No.134, Wu Kung Road, Wuku Industrial Zone, Taipei County, Taiwan / 台北縣五股工業區五工路 134 號
t (886-2) 2299-3279 f (886-2) 2298-0488 www.tw.sgs.com
Member of SGS Group

7. Uncertainty Analysis

DASY4 Uncertainty Budget According to IEEE P1528 [1]								
Error Description	Uncertainty value	Prob. Dist.	Div.	(c_i) 1g	(c_i) 10g	Std. Unc. (1g)	Std. Unc. (10g)	(v_i) v_{eff}
Measurement System								
Probe Calibration	±4.8%	N	1	1	1	±4.8%	±4.8%	∞
Axial Isotropy	±4.7%	R	$\sqrt{3}$	0.7	0.7	±1.9%	±1.9%	∞
Hemispherical Isotropy	±9.6%	R	$\sqrt{3}$	0.7	0.7	±3.9%	±3.9%	∞
Boundary Effects	±1.0%	R	$\sqrt{3}$	1	1	±0.6%	±0.6%	∞
Linearity	±4.7%	R	$\sqrt{3}$	1	1	±2.7%	±2.7%	∞
System Detection Limits	±1.0%	R	$\sqrt{3}$	1	1	±0.6%	±0.6%	∞
Readout Electronics	±1.0%	N	1	1	1	±1.0%	±1.0%	∞
Response Time	±0.8%	R	$\sqrt{3}$	1	1	±0.5%	±0.5%	∞
Integration Time	±2.6%	R	$\sqrt{3}$	1	1	±1.5%	±1.5%	∞
RF Ambient Conditions	±3.0%	R	$\sqrt{3}$	1	1	±1.7%	±1.7%	∞
Probe Positioner	±0.4%	R	$\sqrt{3}$	1	1	±0.2%	±0.2%	∞
Probe Positioning	±2.9%	R	$\sqrt{3}$	1	1	±1.7%	±1.7%	∞
Max. SAR Eval.	±1.0%	R	$\sqrt{3}$	1	1	±0.6%	±0.6%	∞
Test Sample Related								
Device Positioning	±2.9%	N	1	1	1	±2.9%	±2.9%	875
Device Holder	±3.6%	N	1	1	1	±3.6%	±3.6%	5
Power Drift	±5.0%	R	$\sqrt{3}$	1	1	±2.9%	±2.9%	∞
Phantom and Setup								
Phantom Uncertainty	±4.0%	R	$\sqrt{3}$	1	1	±2.3%	±2.3%	∞
Liquid Conductivity (target)	±5.0%	R	$\sqrt{3}$	0.64	0.43	±1.8%	±1.2%	∞
Liquid Conductivity (meas.)	±2.5%	N	1	0.64	0.43	±1.6%	±1.1%	∞
Liquid Permittivity (target)	±5.0%	R	$\sqrt{3}$	0.6	0.49	±1.7%	±1.4%	∞
Liquid Permittivity (meas.)	±2.5%	N	1	0.6	0.49	±1.5%	±1.2%	∞
Combined Std. Uncertainty						±10.3%	±10.0%	331
Expanded STD Uncertainty						**±20.6%**	**±20.1%**	

Unless otherwise stated the results shown in this test report refer only to the sample(s) tested and such sample(s) are retained for 90 days only.
除非另有說明，此報告結果僅對測試之樣品負責，同時此樣品僅保留90天。本報告未經本公司書面許可，不可部份複製。
This document is issued by the Company subject to its General Conditions of Service printed overleaf, available on request or accessible at www.sgs.com/terms_and_conditions.htm and, for electronic format documents, subject to Terms and Conditions for Electronic Documents at www.sgs.com/terms_e-document.htm. Attention is drawn to the limitation of liability, indemnification and jurisdiction issues defined therein. Any holder of this document is advised that information contained hereon reflects the Company's findings at the time of its intervention only and within the limits of Client's instructions, if any. The Company's sole responsibility is to its Client and this document does not exonerate parties to a transaction from exercising all their rights and obligations under the transaction documents. This document cannot be reproduced except in full, without prior written approval of the Company. Any unauthorized alteration, forgery or falsification of the content or appearance of this document is unlawful and offenders may be prosecuted to the fullest extent of the law.

8. Phantom Description

Schmid & Partner Engineering AG

s p e a g

Zeughausstrasse 43, 8004 Zurich, Switzerland
Phone +41 1 245 9700, Fax +41 1 245 9779
info@speag.com, http://www.speag.com

Certificate of Conformity / First Article Inspection

Item	SAM Twin Phantom V4.0
Type No	QD 000 P40 C
Series No	TP-1150 and higher
Manufacturer	SPEAG Zeughausstrasse 43 CH-8004 Zürich Switzerland

Tests
The series production process used allows the limitation to test of first articles.
Complete tests were made on the pre-series Type No. QD 000 P40 AA, Serial No. TP-1001 and on the series first article Type No. QD 000 P40 BA, Serial No. TP-1006. Certain parameters have been retested using further series items (called samples) or are tested at each item.

Test	Requirement	Details	Units tested
Dimensions	Compliant with the geometry according to the CAD model.	IT'IS CAD File (*)	First article, Samples
Material thickness of shell	Compliant with the requirements according to the standards	2mm +/- 0.2mm in flat and specific areas of head section	First article, Samples, TP-1314 ff.
Material thickness at ERP	Compliant with the requirements according to the standards	6mm +/- 0.2mm at ERP	First article, All items
Material parameters	Dielectric parameters for required frequencies	300 MHz – 6 GHz: Relative permittivity < 5, Loss tangent < 0.05	Material samples
Material resistivity	The material has been tested to be compatible with the liquids defined in the standards if handled and cleaned according to the instructions. Observe technical Note for material compatibility.	DEGMBE based simulating liquids	Pre-series, First article, Material samples
Sagging	Compliant with the requirements according to the standards. Sagging of the flat section when filled with tissue simulating liquid.	< 1% typical < 0.8% if filled with 155mm of HSL900 and without DUT below	Prototypes, Sample testing

Standards
[1] CENELEC EN 50361
[2] IEEE Std 1528-2003
[3] IEC 62209 Part I
[4] FCC OET Bulletin 65, Supplement C, Edition 01-01
(*) The IT'IS CAD file is derived from [2] and is also within the tolerance requirements of the shapes of the other documents.

Conformity
Based on the sample tests above, we certify that this item is in compliance with the uncertainty requirements of SAR measurements specified in standards [1] to [4].

Date 07.07.2005

Signature / Stamp

s p e a g
Schmid & Partner Engineering AG
Zeughausstrasse 43, 8004 Zurich, Switzerland
Phone +41 1 245 9700, Fax +41 1 245 9779
info@speag.com, http://www.speag.com

Unless otherwise stated the results shown in this test report refer only to the sample(s) tested and such sample(s) are retained for 90 days only.
除非另有說明，此報告結果僅對測試之樣品負責，同時此樣品僅保留90天。本報告未經本公司書面許可，不可部份複製。
This document is issued by the Company subject to its General Conditions of Service printed overleaf, available on request or accessible at www.sgs.com/terms_and_conditions.htm and, for electronic format documents, subject to Terms and Conditions for Electronic Documents at www.sgs.com/terms_e-document.htm. Attention is drawn to the limitation of liability, indemnification and jurisdiction issues defined therein. Any holder of this document is advised that information contained hereon reflects the Company's findings at the time of its intervention only and within the limits of Client's instructions, if any. The Company's sole responsibility is to its Client and this document does not exonerate parties to a transaction from exercising all their rights and obligations under the transaction documents. This document cannot be reproduced except in full, without prior written approval of the Company. Any unauthorized alteration, forgery or falsification of the content or appearance of this document is unlawful and offenders may be prosecuted to the fullest extent of the law.

9. System Validation from Original equipment supplier

Calibration Laboratory of
Schmid & Partner
Engineering AG
Zeughausstrasse 43, 8004 Zurich, Switzerland

S Schweizerischer Kalibrierdienst
C Service suisse d'étalonnage
S Servizio svizzero di taratura
Swiss Calibration Service

Accredited by the Swiss Accreditation Service (SAS)
The Swiss Accreditation Service is one of the signatories to the EA Multilateral Agreement for the recognition of calibration certificates

Accreditation No.: **SCS 108**

Client **SGS-TW (Auden)**

Certificate No: **D835V2-4d063_May10**

CALIBRATION CERTIFICATE

Object	D835V2 - SN: 4d063
Calibration procedure(s)	QA CAL-05.v7 Calibration procedure for dipole validation kits
Calibration date:	May 21, 2010

This calibration certificate documents the traceability to national standards, which realize the physical units of measurements (SI).
The measurements and the uncertainties with confidence probability are given on the following pages and are part of the certificate.

All calibrations have been conducted in the closed laboratory facility: environment temperature (22 ± 3)°C and humidity < 70%.

Calibration Equipment used (M&TE critical for calibration)

Primary Standards	ID #	Cal Date (Certificate No.)	Scheduled Calibration
Power meter EPM-442A	GB37480704	06-Oct-09 (No. 217-01086)	Oct-10
Power sensor HP 8481A	US37292783	06-Oct-09 (No. 217-01086)	Oct-10
Reference 20 dB Attenuator	SN: 5086 (20g)	30-Mar-10 (No. 217-01158)	Mar-11
Type-N mismatch combination	SN: 5047.2 / 06327	30-Mar-10 (No. 217-01162)	Mar-11
Reference Probe ES3DV3	SN: 3205	30-Apr-10 (No. ES3-3205_Apr10)	Apr-11
DAE4	SN: 601	02-Mar-10 (No. DAE4-601_Mar10)	Mar-11

Secondary Standards	ID #	Check Date (in house)	Scheduled Check
Power sensor HP 8481A	MY41092317	18-Oct-02 (in house check Oct-09)	In house check: Oct-11
RF generator R&S SMT-06	100005	4-Aug-99 (in house check Oct-09)	In house check: Oct-11
Network Analyzer HP 8753E	US37390585 S4206	18-Oct-01 (in house check Oct-09)	In house check: Oct-10

	Name	Function	Signature
Calibrated by:	Jeton Kastrati	Laboratory Technician	
Approved by:	Katja Pokovic	Technical Manager	

Issued: May 26, 2010

This calibration certificate shall not be reproduced except in full without written approval of the laboratory.

Certificate No: D835V2-4d063_May10 Page 1 of 9

Unless otherwise stated the results shown in this test report refer only to the sample(s) tested and such sample(s) are retained for 90 days only.
除非另有說明，此報告結果僅對測試之樣品負責，同時此樣品僅保留90天。本報告未經本公司書面許可，不可部份複製。
This document is issued by the Company subject to its General Conditions of Service printed overleaf, available on request or accessible at www.sgs.com/terms_and_conditions.htm and, for electronic format documents, subject to Terms and Conditions for Electronic Documents at www.sgs.com/terms_e-document.htm. Attention is drawn to the limitation of liability, indemnification and jurisdiction issues defined therein. Any holder of this document is advised that information contained hereon reflects the Company's findings at the time of its intervention only and within the limits of Client's instructions, if any. The Company's sole responsibility is to its Client and this document does not exonerate parties to a transaction from exercising all their rights and obligations under the transaction documents. This document cannot be reproduced except in full, without prior written approval of the Company. Any unauthorized alteration, forgery or falsification of the content or appearance of this document is unlawful and offenders may be prosecuted to the fullest extent of the law.

DASY5 Validation Report for Body

Date/Time: 20.05.2010 10:45:06

Test Laboratory: SPEAG, Zurich, Switzerland

DUT: Dipole 835 MHz; Type: D835V2; Serial: D835V2 - SN:4d063

Communication System: CW; Frequency: 835 MHz; Duty Cycle: 1:1
Medium: MSL900
Medium parameters used: f = 835 MHz; σ = 0.98 mho/m; ε_r = 54.2; ρ = 1000 kg/m^3
Phantom section: Flat Section
Measurement Standard: DASY5 (IEEE/IEC/ANSI C63.19-2007)

DASY5 Configuration:

- Probe: ES3DV3 - SN3205; ConvF(5.86, 5.86, 5.86); Calibrated: 30.04.2010
- Sensor-Surface: 3mm (Mechanical Surface Detection)
- Electronics: DAE4 Sn601; Calibrated: 02.03.2010
- Phantom: Flat Phantom 4.9L; Type: QD000P49AA; Serial: 1001
- Measurement SW: DASY5, V5.2 Build 162; SEMCAD X Version 14.0 Build 61

Pin250 mW/d=15mm, dist=3.0mm (ES-Probe)/Zoom Scan (7x7x7)/Cube 0: Measurement grid: dx=5mm, dy=5mm, dz=5mm
Reference Value = 56.5 V/m; Power Drift = 0.013 dB
Peak SAR (extrapolated) = 3.71 W/kg
SAR(1 g) = 2.53 mW/g; SAR(10 g) = 1.66 mW/g
Maximum value of SAR (measured) = 2.94 mW/g

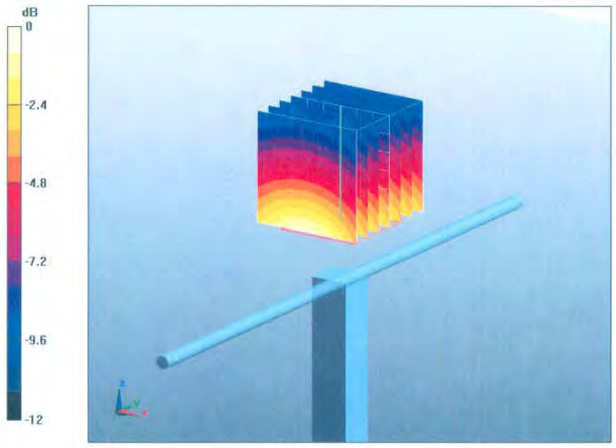

0 dB = 2.94mW/g

Unless otherwise stated the results shown in this test report refer only to the sample(s) tested and such sample(s) are retained for 90 days only.
除非另有說明，此報告結果僅對測試之樣品負責，同時此樣品僅保留90天。本報告未經本公司書面許可，不可部份複製。
This document is issued by the Company subject to its General Conditions of Service printed overleaf, available on request or accessible at www.sgs.com/terms_and_conditions.htm and, for electronic format documents, subject to Terms and Conditions for Electronic Documents at www.sgs.com/terms_e-document.htm. Attention is drawn to the limitation of liability, indemnification and jurisdiction issues defined therein. Any holder of this document is advised that information contained hereon reflects the Company's findings at the time of its intervention only and within the limits of Client's instructions, if any. The Company's sole responsibility is to its Client and this document does not exonerate parties to a transaction from exercising all their rights and obligations under the transaction documents. This document cannot be reproduced except in full, without prior written approval of the Company. Any unauthorized alteration, forgery or falsification of the content or appearance of this document is unlawful and offenders may be prosecuted to the fullest extent of the law.

SGS Taiwan Ltd. 台灣檢驗科技股份有限公司
No.134, Wu Kung Road, Wuku Industrial Zone, Taipei County, Taiwan / 台北縣五股工業區五工路 134 號
t (886-2) 2299-3279 f (886-2) 2298-0488 www.tw.sgs.com
Member of SGS Group

Calibration Laboratory of
Schmid & Partner
Engineering AG
Zeughausstrasse 43, 8004 Zurich, Switzerland

S Schweizerischer Kalibrierdienst
C Service suisse d'étalonnage
S Servizio svizzero di taratura
Swiss Calibration Service

Accredited by the Swiss Accreditation Service (SAS)
The Swiss Accreditation Service is one of the signatories to the EA Multilateral Agreement for the recognition of calibration certificates

Accreditation No.: **SCS 108**

Client **SGS-TW (Auden)**

Certificate No: **D1750V2-1008_May10**

CALIBRATION CERTIFICATE

Object	D1750V2 - SN: 1008
Calibration procedure(s)	QA CAL-05.v6 Calibration procedure for dipole validation kits
Calibration date:	May 26, 2010

This calibration certificate documents the traceability to national standards, which realize the physical units of measurements (SI).
The measurements and the uncertainties with confidence probability are given on the following pages and are part of the certificate.

All calibrations have been conducted in the closed laboratory facility: environment temperature (22 ± 3)°C and humidity < 70%.

Calibration Equipment used (M&TE critical for calibration)

Primary Standards	ID #	Cal Date (Certificate No.)	Scheduled Calibration
Power meter EPM-442A	GB37480704	06-Oct-09 (No. 217-01086)	Oct-10
Power sensor HP 8481A	US37292783	06-Oct-09 (No. 217-01086)	Oct-10
Reference 20 dB Attenuator	SN: 5086 (20g)	30-Mar-10 (No. 217-01158)	Mar-11
Type-N mismatch combination	SN: 5047.2 / 06327	30-Mar-10 (No. 217-01162)	Mar-11
Reference Probe ES3DV3	SN: 3205	30-Apr-10 (No. ES3-3205_Apr10)	Apr-11
DAE4	SN: 601	02-Mar-10 (No. DAE4-601_Mar10)	Mar-11

Secondary Standards	ID #	Check Date (in house)	Scheduled Check
Power sensor HP 8481A	MY41092317	18-Oct-02 (in house check Oct-09)	In house check: Oct-11
RF generator R&S SMT-06	100005	4-Aug-99 (in house check Oct-09)	In house check: Oct-11
Network Analyzer HP 8753E	US37390585 S4206	18-Oct-01 (in house check Oct-09)	In house check: Oct-10

	Name	Function	Signature
Calibrated by:	Dimce Iliev	Laboratory Technician	D. Iliev
Approved by:	Katja Pokovic	Technical Manager	

Issued: May 27, 2010

This calibration certificate shall not be reproduced except in full without written approval of the laboratory.

Unless otherwise stated the results shown in this test report refer only to the sample(s) tested and such sample(s) are retained for 90 days only.
除非另有說明，此報告結果僅對測試之樣品負責，同時此樣品僅保留90天。本報告未經本公司書面許可，不可部份複製。
This document is issued by the Company subject to its General Conditions of Service printed overleaf, available on request or accessible at www.sgs.com/terms_and_conditions.htm and, for electronic format documents, subject to Terms and Conditions for Electronic Documents at www.sgs.com/terms_e-document.htm. Attention is drawn to the limitation of liability, indemnification and jurisdiction issues defined therein. Any holder of this document is advised that information contained hereon reflects the Company's findings at the time of its intervention only and within the limits of Client's instructions, if any. The Company's sole responsibility is to its Client and this document does not exonerate parties to a transaction from exercising all their rights and obligations under the transaction documents. This document cannot be reproduced except in full, without prior written approval of the Company. Any unauthorized alteration, forgery or falsification of the content or appearance of this document is unlawful and offenders may be prosecuted to the fullest extent of the law.

DASY5 Validation Report for Body TSL

Date/Time: 26.05.2010 10:38:16

Test Laboratory: SPEAG, Zurich, Switzerland

Communication System: CW; Frequency: 1750 MHz; Duty Cycle: 1:1
Medium: MSL U11 BB
Medium parameters used: f = 1750 MHz; σ = 1.43 mho/m; ε_r = 54; ρ = 1000 kg/m^3
Phantom section: Flat Section
Measurement Standard: DASY5 (IEEE/IEC/ANSI C63.19-2007)

DASY5 Configuration:

- Probe: ES3DV3 - SN3205; ConvF(4.8, 4.8, 4.8); Calibrated: 30.04.2010
- Sensor-Surface: 3mm (Mechanical Surface Detection)
- Electronics: DAE4 Sn601; Calibrated: 02.03.2010
- Phantom: Flat Phantom 5.0 (back); Type: QD000P50AA; Serial: 1002
- Measurement SW: DASY5, V5.2 Build 162; SEMCAD X Version 14.0 Build 61

Pin250 mW /d=10mm, dist=3.0mm (ES-Probe)/Zoom Scan (7x7x7) /Cube 0: Measurement grid: dx=5mm, dy=5mm, dz=5mm
Reference Value = 95.1 V/m; Power Drift = -0.012 dB
Peak SAR (extrapolated) = 15.9 W/kg
SAR(1 g) = 9.46 mW/g; SAR(10 g) = 5.18 mW/g
Maximum value of SAR (measured) = 11.9 mW/g

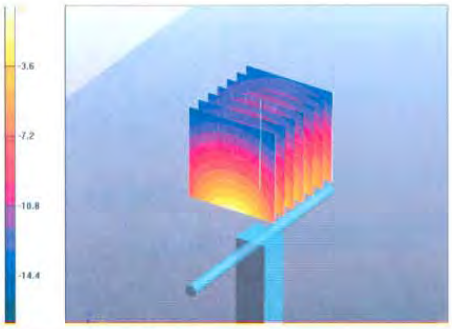

Unless otherwise stated the results shown in this test report refer only to the sample(s) tested and such sample(s) are retained for 90 days only.
除非另有說明，此報告結果僅對測試之樣品負責，同時此樣品僅保留90天。本報告未經本公司書面許可，不可部份複製。
This document is issued by the Company subject to its General Conditions of Service printed overleaf, available on request or accessible at www.sgs.com/terms_and_conditions.htm and, for electronic format documents, subject to Terms and Conditions for Electronic Documents at www.sgs.com/terms_e-document.htm. Attention is drawn to the limitation of liability, indemnification and jurisdiction issues defined therein. Any holder of this document is advised that information contained hereon reflects the Company's findings at the time of its intervention only and within the limits of Client's instructions, if any. The Company's sole responsibility is to its Client and this document does not exonerate parties to a transaction from exercising all their rights and obligations under the transaction documents. This document cannot be reproduced except in full, without prior written approval of the Company. Any unauthorized alteration, forgery or falsification of the content or appearance of this document is unlawful and offenders may be prosecuted to the fullest extent of the law.

SGS Taiwan Ltd. 台灣檢驗科技股份有限公司
No.134, Wu Kung Road, Wuku Industrial Zone, Taipei County, Taiwan / 台北縣五股工業區五工路 134 號
t (886-2) 2299-3279 f (886-2) 2298-0488 www.tw.sgs.com
Member of SGS Group

Calibration Laboratory of
Schmid & Partner
Engineering AG
Zeughausstrasse 43, 8004 Zurich, Switzerland

S Schweizerischer Kalibrierdienst
C Service suisse d'étalonnage
Servizio svizzero di taratura
S Swiss Calibration Service

Accredited by the Swiss Accreditation Service (SAS)
The Swiss Accreditation Service is one of the signatories to the EA Multilateral Agreement for the recognition of calibration certificates

Accreditation No.: SCS 108

Client **SGS-TW (Auden)**

Certificate No: D1900V2-5d027_Apr10

CALIBRATION CERTIFICATE

Object	D1900V2 - SN: 5d027
Calibration procedure(s)	QA CAL-05.v7 Calibration procedure for dipole validation kits
Calibration date:	April 28, 2010

This calibration certificate documents the traceability to national standards, which realize the physical units of measurements (SI).
The measurements and the uncertainties with confidence probability are given on the following pages and are part of the certificate.

All calibrations have been conducted in the closed laboratory facility: environment temperature (22 ± 3)°C and humidity < 70%.

Calibration Equipment used (M&TE critical for calibration)

Primary Standards	ID #	Cal Date (Certificate No.)	Scheduled Calibration
Power meter EPM-442A	GB37480704	06-Oct-09 (No. 217-01086)	Oct-10
Power sensor HP 8481A	US37292783	06-Oct-09 (No. 217-01086)	Oct-10
Reference 20 dB Attenuator	SN: 5086 (20g)	30-Mar-10 (No. 217-01158)	Mar-11
Type-N mismatch combination	SN: 5047.2 / 06327	30-Mar-10 (No. 217-01162)	Mar-11
Reference Probe ES3DV3	SN: 3205	26-Jun-09 (No. ES3-3205_Jun09)	Jun-10
DAE4	SN: 601	02-Mar-10 (No. DAE4-601_Mar10)	Mar-11

Secondary Standards	ID #	Check Date (in house)	Scheduled Check
Power sensor HP 8481A	MY41092317	18-Oct-02 (in house check Oct-09)	In house check: Oct-11
RF generator R&S SMT-06	100005	4-Aug-99 (in house check Oct-09)	In house check: Oct-11
Network Analyzer HP 8753E	US37390585 S4206	18-Oct-01 (in house check Oct-09)	In house check: Oct-10

	Name	Function	Signature
Calibrated by:	Dimce Iliev	Laboratory Technician	D. Iliev
Approved by:	Katja Pokovic	Technical Manager	

Issued: April 29, 2010

This calibration certificate shall not be reproduced except in full without written approval of the laboratory.

Unless otherwise stated the results shown in this test report refer only to the sample(s) tested and such sample(s) are retained for 90 days only.
除非另有說明，此報告結果僅對測試之樣品負責，同時此樣品僅保留90天。本報告未經本公司書面許可，不可部份複製。
This document is issued by the Company subject to its General Conditions of Service printed overleaf, available on request or accessible at www.sgs.com/terms_and_conditions.htm and, for electronic format documents, subject to Terms and Conditions for Electronic Documents at www.sgs.com/terms_e-document.htm. Attention is drawn to the limitation of liability, indemnification and jurisdiction issues defined therein. Any holder of this document is advised that information contained hereon reflects the Company's findings at the time of its intervention only and within the limits of Client's instructions, if any. The Company's sole responsibility is to its Client and this document does not exonerate parties to a transaction from exercising all their rights and obligations under the transaction documents. This document cannot be reproduced except in full, without prior written approval of the Company. Any unauthorized alteration, forgery or falsification of the content or appearance of this document is unlawful and offenders may be prosecuted to the fullest extent of the law.

DASY5 Validation Report for Body

Date/Time: 28.04.2010 15:11:22

Test Laboratory: SPEAG, Zurich, Switzerland

DUT: Dipole 1900 MHz; Type: D1900V2; Serial: D1900V2 - SN:5d027

Communication System: CW; Frequency: 1900 MHz; Duty Cycle: 1:1
Medium: MSL U11 BB
Medium parameters used: f = 1900 MHz; σ = 1.53 mho/m; ε_r = 54.9; ρ = 1000 kg/m^3
Phantom section: Flat Section
Measurement Standard: DASY5 (IEEE/IEC/ANSI C63.19-2007)

DASY5 Configuration:

- Probe: ES3DV3 - SN3205; ConvF(4.59, 4.59, 4.59); Calibrated: 26.06.2009
- Sensor-Surface: 3mm (Mechanical Surface Detection)
- Electronics: DAE4 Sn601; Calibrated: 02.03.2010
- Phantom: Flat Phantom 5.0 (back); Type: QD000P50AA; Serial: 1002
- Measurement SW: DASY5, V5.2 Build 162; SEMCAD X Version 14.0 Build 57

Pin250 mW /d=10mm, dist=3.0mm (ES-Probe)/Zoom Scan (7x7x7) /Cube 0: Measurement grid: dx=5mm, dy=5mm, dz=5mm
Reference Value = 96.2 V/m; Power Drift = -0.014 dB
Peak SAR (extrapolated) = 17.1 W/kg
SAR(1 g) = 10.1 mW/g; SAR(10 g) = 5.36 mW/g
Maximum value of SAR (measured) = 12.7 mW/g

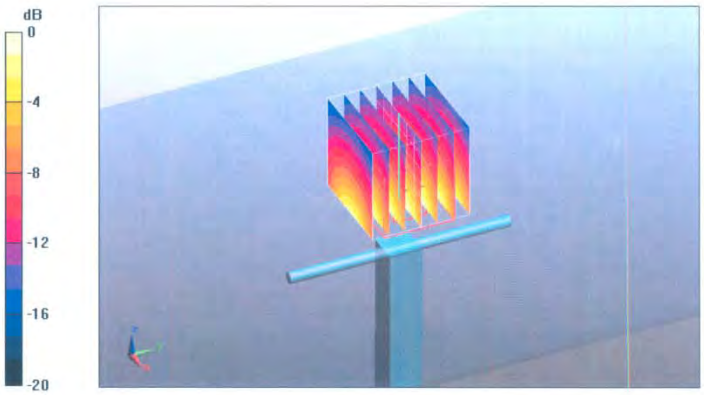

0 dB = 12.7mW/g

Unless otherwise stated the results shown in this test report refer only to the sample(s) tested and such sample(s) are retained for 90 days only.
除非另有說明，此報告結果僅對測試之樣品負責，同時此樣品僅保留90天。本報告未經本公司書面許可，不可部份複製。
This document is issued by the Company subject to its General Conditions of Service printed overleaf, available on request or accessible at www.sgs.com/terms_and_conditions.htm and, for electronic format documents, subject to Terms and Conditions for Electronic Documents at www.sgs.com/terms_e-document.htm. Attention is drawn to the limitation of liability, indemnification and jurisdiction issues defined therein. Any holder of this document is advised that information contained hereon reflects the Company's findings at the time of its intervention only and within the limits of Client's instructions, if any. The Company's sole responsibility is to its Client and this document does not exonerate parties to a transaction from exercising all their rights and obligations under the transaction documents. This document cannot be reproduced except in full, without prior written approval of the Company. Any unauthorized alteration, forgery or falsification of the content or appearance of this document is unlawful and offenders may be prosecuted to the fullest extent of the law.

SGS Taiwan Ltd. 台灣檢驗科技股份有限公司
No.134, Wu Kung Road, Wuku Industrial Zone, Taipei County, Taiwan / 台北縣五股工業區五工路 134 號
t (886-2) 2299-3279 f (886-2) 2298-0488 www.tw.sgs.com
Member of SGS Group

Calibration Laboratory of
Schmid & Partner
Engineering AG
Zeughausstrasse 43, 8004 Zurich, Switzerland

S Schweizerischer Kalibrierdienst
C Service suisse d'étalonnage
S Servizio svizzero di taratura
Swiss Calibration Service

Accredited by the Swiss Accreditation Service (SAS)
The Swiss Accreditation Service is one of the signatories to the EA Multilateral Agreement for the recognition of calibration certificates

Accreditation No.: **SCS 108**

Client **SGS-TW (Auden)**

Certificate No: **D2450V2-727_Apr10**

CALIBRATION CERTIFICATE

Object	D2450V2 - SN: 727
Calibration procedure(s)	QA CAL-05.v7 Calibration procedure for dipole validation kits
Calibration date:	April 29, 2010

This calibration certificate documents the traceability to national standards, which realize the physical units of measurements (SI).
The measurements and the uncertainties with confidence probability are given on the following pages and are part of the certificate.

All calibrations have been conducted in the closed laboratory facility: environment temperature (22 ± 3)°C and humidity < 70%.

Calibration Equipment used (M&TE critical for calibration)

Primary Standards	ID #	Cal Date (Certificate No.)	Scheduled Calibration
Power meter EPM-442A	GB37480704	06-Oct-09 (No. 217-01086)	Oct-10
Power sensor HP 8481A	US37292783	06-Oct-09 (No. 217-01086)	Oct-10
Reference 20 dB Attenuator	SN: 5086 (20g)	30-Mar-10 (No. 217-01158)	Mar-11
Type-N mismatch combination	SN: 5047.2 / 06327	30-Mar-10 (No. 217-01162)	Mar-11
Reference Probe ES3DV3	SN: 3205	26-Jun-09 (No. ES3-3205_Jun09)	Jun-10
DAE4	SN: 601	02-Mar-10 (No. DAE4-601_Mar10)	Mar-11

Secondary Standards	ID #	Check Date (in house)	Scheduled Check
Power sensor HP 8481A	MY41092317	18-Oct-02 (in house check Oct-09)	In house check: Oct-11
RF generator R&S SMT-06	100005	4-Aug-99 (in house check Oct-09)	In house check: Oct-11
Network Analyzer HP 8753E	US37390585 S4206	18-Oct-01 (in house check Oct-09)	In house check: Oct-10

	Name	Function	Signature
Calibrated by:	Jeton Kastrati	Laboratory Technician	
Approved by:	Katja Pokovic	Technical Manager	

Issued: April 29, 2010

This calibration certificate shall not be reproduced except in full without written approval of the laboratory.

Unless otherwise stated the results shown in this test report refer only to the sample(s) tested and such sample(s) are retained for 90 days only.
除非另有說明，此報告結果僅對測試之樣品負責，同時此樣品僅保留90天。本報告未經本公司書面許可，不可部份複製。
This document is issued by the Company subject to its General Conditions of Service printed overleaf, available on request or accessible at www.sgs.com/terms_and_conditions.htm and, for electronic format documents, subject to Terms and Conditions for Electronic Documents at www.sgs.com/terms_e-document.htm. Attention is drawn to the limitation of liability, indemnification and jurisdiction issues defined therein. Any holder of this document is advised that information contained hereon reflects the Company's findings at the time of its intervention only and within the limits of Client's instructions, if any. The Company's sole responsibility is to its Client and this document does not exonerate parties to a transaction from exercising all their rights and obligations under the transaction documents. This document cannot be reproduced except in full, without prior written approval of the Company. Any unauthorized alteration, forgery or falsification of the content or appearance of this document is unlawful and offenders may be prosecuted to the fullest extent of the law.

SGS Taiwan Ltd. 台灣檢驗科技股份有限公司
No.134, Wu Kung Road, Wuku Industrial Zone, Taipei County, Taiwan / 台北縣五股工業區五工路 134 號
t (886-2) 2299-3279 f (886-2) 2298-0488 www.tw.sgs.com
Member of SGS Group

DASY5 Validation Report for Body

Date/Time: 29.04.2010 14:57:43

Test Laboratory: SPEAG, Zurich, Switzerland

DUT: Dipole 2450 MHz; Type: D2450V2; Serial: D2450V2 - SN:727

Communication System: CW; Frequency: 2450 MHz; Duty Cycle: 1:1
Medium: MSL U11 BB
Medium parameters used: f = 2450 MHz; σ = 2 mho/m; ε_r = 54.1; ρ = 1000 kg/m^3
Phantom section: Flat Section
Measurement Standard: DASY5 (IEEE/IEC/ANSI C63.19-2007)

DASY5 Configuration:

- Probe: ES3DV3 - SN3205; ConvF(4.31, 4.31, 4.31); Calibrated: 26.06.2009
- Sensor-Surface: 3mm (Mechanical Surface Detection)
- Electronics: DAE4 Sn601; Calibrated: 02.03.2010
- Phantom: Flat Phantom 5.0 (back); Type: QD000P50AA; Serial: 1002
- Measurement SW: DASY5, V5.2 Build 162; SEMCAD X Version 14.0 Build 57

Pin250 mW /d=10mm, dist=3.0mm (ES-Probe)/Zoom Scan (7x7x7)/Cube 0: Measurement grid: dx=5mm, dy=5mm, dz=5mm
Reference Value = 96.1 V/m; Power Drift = 0.00929 dB
Peak SAR (extrapolated) = 27.7 W/kg
SAR(1 g) = 13.4 mW/g; SAR(10 g) = 6.23 mW/g
Maximum value of SAR (measured) = 17.6 mW/g

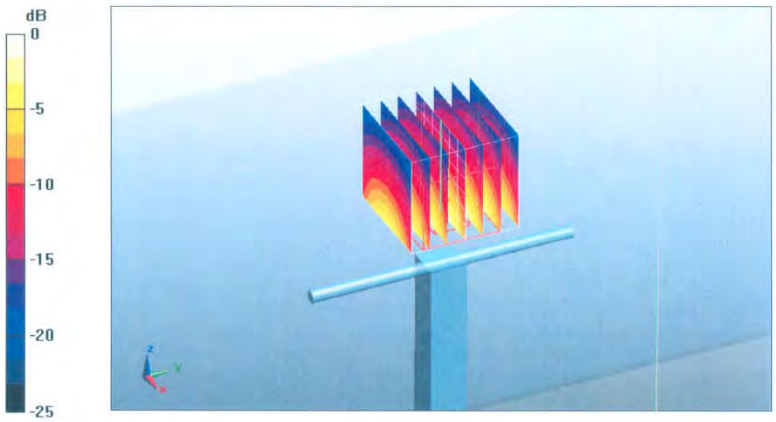

0 dB = 17.6mW/g

Certificate No: D2450V2-727_Apr10 Page 8 of 9

End of 1st part of report

Unless otherwise stated the results shown in this test report refer only to the sample(s) tested and such sample(s) are retained for 90 days only.
除非另有說明，此報告結果僅對測試之樣品負責，同時此樣品僅保留90天。本報告未經本公司書面許可，不可部份複製。
This document is issued by the Company subject to its General Conditions of Service printed overleaf, available on request or accessible at www.sgs.com/terms_and_conditions.htm and, for electronic format documents, subject to Terms and Conditions for Electronic Documents at www.sgs.com/terms_e-document.htm. Attention is drawn to the limitation of liability, indemnification and jurisdiction issues defined therein. Any holder of this document is advised that information contained hereon reflects the Company's findings at the time of its intervention only and within the limits of Client's instructions, if any. The Company's sole responsibility is to its Client and this document does not exonerate parties to a transaction from exercising all their rights and obligations under the transaction documents. This document cannot be reproduced except in full, without prior written approval of the Company. Any unauthorized alteration, forgery or falsification of the content or appearance of this document is unlawful and offenders may be prosecuted to the fullest extent of the law.