Appendix A. Plots of System Verification

The plots for system verification are shown as follows.

Test Laboratory: Bureau Veritas ADT SAR/HAC Testing Lab Date: 2023/01/15

S01_System Check_H1900_230115

DUT: Dipole 1900 MHz; Type: D1900V2; SN: 5d036

Communication System: UID 0, CW (0); Frequency: 1900 MHz;Duty Cycle: 1:1
Medium: H06T27N4_0115 Medium parameters used: f = 1900 MHz; σ = 1.465 S/m; ε_r = 42.086; ρ = 1000 kg/m^3
Ambient Temperature：22.2 ℃ ； Liquid Temperature：21.6 ℃

DASY5 Configuration:
- Probe: EX3DV4 - SN7736; ConvF(8.26, 8.26, 8.26) @ 1900 MHz; Calibrated: 2022/11/15
- Sensor-Surface: 1.4mm (Mechanical Surface Detection)
- Electronics: DAE4 Sn1698; Calibrated: 2022/11/17
- Phantom: ELI_Phantom_1204; Type: QD OVA 002 Ax; Serial: 1204
- Measurement SW: DASY52, Version 52.10 (4); SEMCAD X Version 14.6.14 (7501)

Pin=50mW/Area Scan (61x61x1): Interpolated grid: dx=1.500 mm, dy=1.500 mm
Maximum value of SAR (interpolated) = 2.71 W/kg

Pin=50mW/Zoom Scan (5x5x7)/Cube 0: Measurement grid: dx=8mm, dy=8mm, dz=5mm
Reference Value = 43.15 V/m; Power Drift = 0.01 dB
Peak SAR (extrapolated) = 3.28 W/kg
SAR(1 g) = 1.92 W/kg; SAR(10 g) = 0.915 W/kg (SAR corrected for target medium)
Maximum value of SAR (measured) = 2.76 W/kg

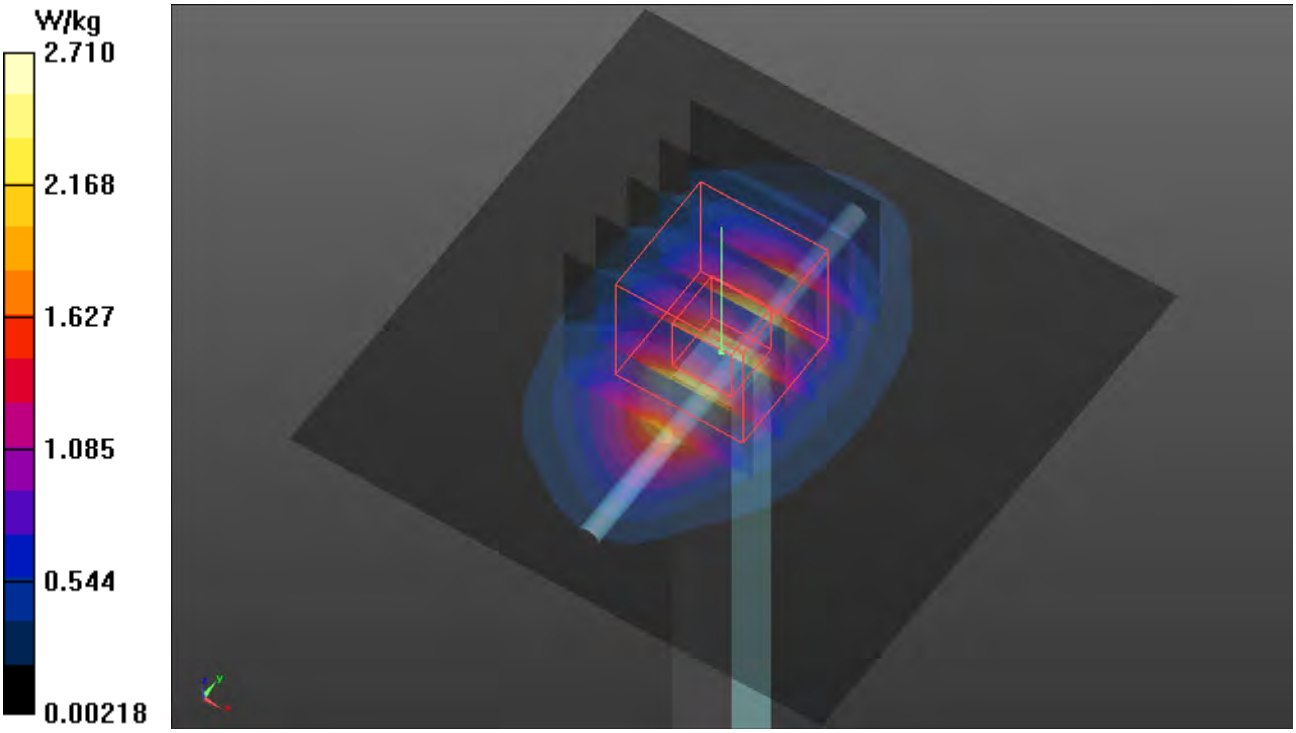

Test Laboratory: Bureau Veritas ADT SAR/HAC Testing Lab Date: 2023/01/15

S02_System Check_H2600_230115

DUT: Dipole 2600 MHz; Type: D2600V2; SN: 1020

Communication System: UID 0, CW; Frequency: 2600 MHz;Duty Cycle: 1:1
Medium: H06T27N4_0115 Medium parameters used: f = 2600 MHz; σ = 1.975 S/m; ε_r = 41.133; ρ = 1000 kg/m^3
Ambient Temperature：22.2 ℃ ； Liquid Temperature：21.6 ℃

DASY5 Configuration:
- Probe: EX3DV4 - SN7736; ConvF(7.76, 7.76, 7.76) @ 2600 MHz; Calibrated: 2022/11/15
- Sensor-Surface: 1.4mm (Mechanical Surface Detection)
- Electronics: DAE4 Sn1698; Calibrated: 2022/11/17
- Phantom: ELI_Phantom_1204; Type: QD OVA 002 Ax; Serial: 1204
- Measurement SW: DASY52, Version 52.10 (4); SEMCAD X Version 14.6.14 (7501)

Pin=50mW/Area Scan (81x81x1): Interpolated grid: dx=1.200 mm, dy=1.200 mm
Maximum value of SAR (interpolated) = 3.94 W/kg

Pin=50mW/Zoom Scan (7x7x7)/Cube 0: Measurement grid: dx=5mm, dy=5mm, dz=5mm
Reference Value = 45.90 V/m; Power Drift = 0.02 dB
Peak SAR (extrapolated) = 4.93 W/kg
SAR(1 g) = 2.62 W/kg; SAR(10 g) = 1.18 W/kg (SAR corrected for target medium)
Maximum value of SAR (measured) = 3.99 W/kg

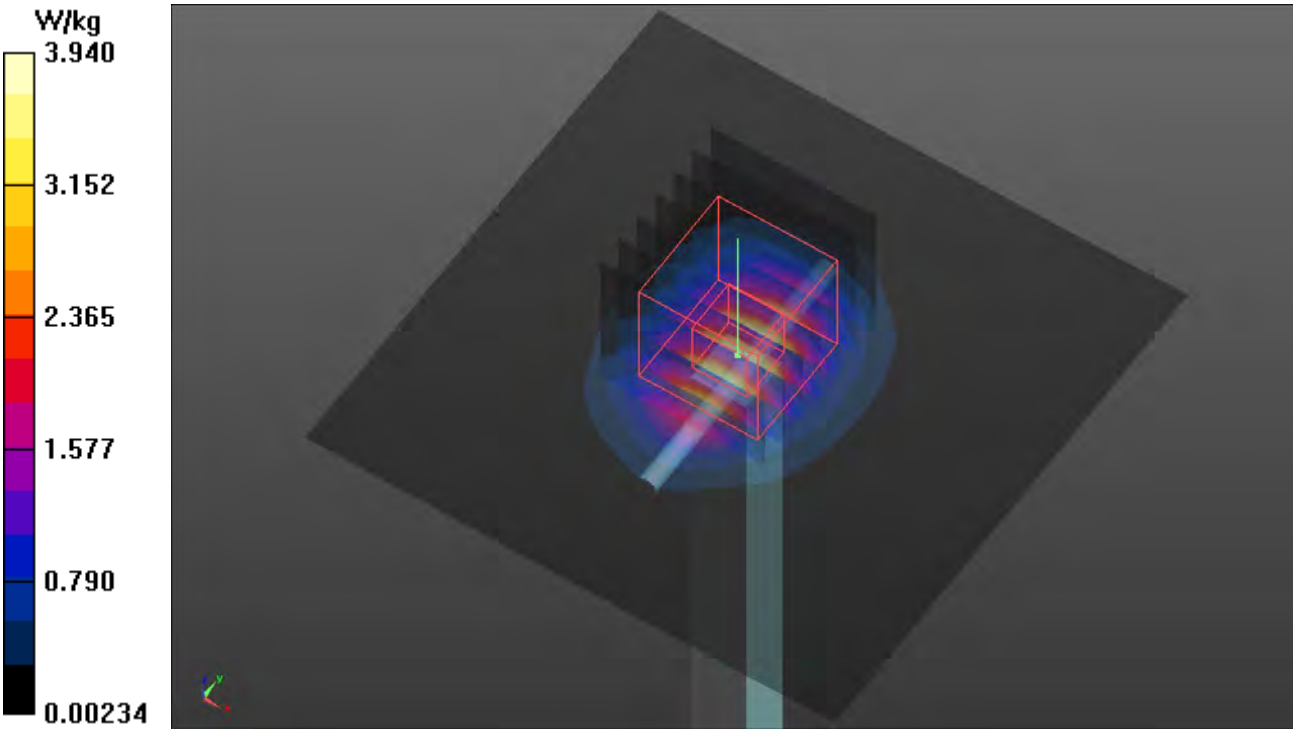

Test Laboratory: Bureau Veritas ADT SAR/HAC Testing Lab Date: 20223/01/15

S03_System Check_H1750_230115

DUT: Dipole 1750 MHz; Type: D1750V2; SN: 1055

Communication System: UID 0, CW; Frequency: 1750 MHz;Duty Cycle: 1:1
Medium: H06T27N4_0115 Medium parameters used: f = 1750 MHz; σ = 1.38 S/m; ε_r = 42.303; ρ = 1000 kg/m^3
Ambient Temperature：22.2 ℃ ； Liquid Temperature：21.6 ℃

DASY5 Configuration:
- Probe: EX3DV4 - SN7736; ConvF(8.64, 8.64, 8.64) @ 1750 MHz; Calibrated: 2022/11/15
- Sensor-Surface: 1.4mm (Mechanical Surface Detection)
- Electronics: DAE4 Sn1698; Calibrated: 2022/11/17
- Phantom: ELI_Phantom_1204; Type: QD OVA 002 Ax; Serial: 1204
- Measurement SW: DASY52, Version 52.10 (4); SEMCAD X Version 14.6.14 (7501)

Pin=50mW/Area Scan (61x61x1): Interpolated grid: dx=1.500 mm, dy=1.500 mm
Maximum value of SAR (interpolated) = 2.45 W/kg

Pin=50mW/Zoom Scan (5x5x7)/Cube 0: Measurement grid: dx=8mm, dy=8mm, dz=5mm
Reference Value = 42.81 V/m; Power Drift = -0.01 dB
Peak SAR (extrapolated) = 2.92 W/kg
SAR(1 g) = 1.76 W/kg; SAR(10 g) = 0.915 W/kg (SAR corrected for target medium)
Maximum value of SAR (measured) = 2.47 W/kg

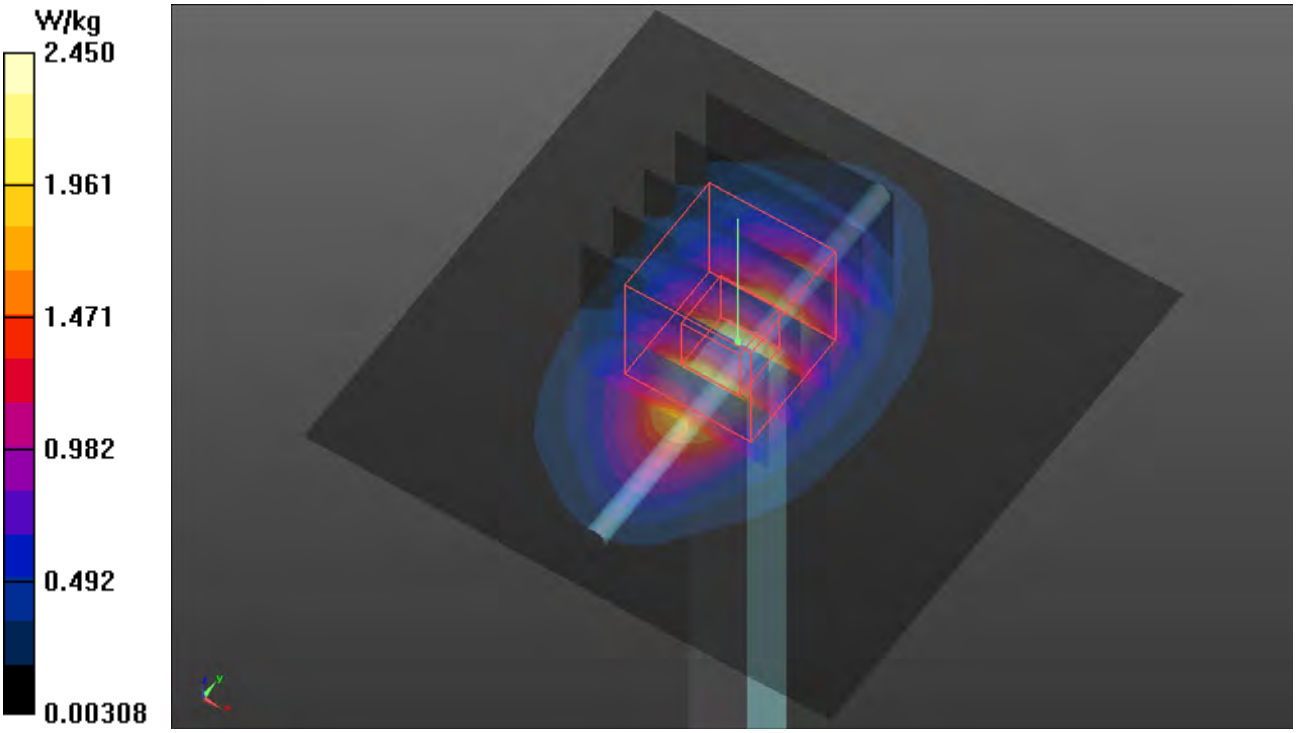

Test Laboratory: Bureau Veritas ADT SAR/HAC Testing Lab Date: 2023/01/15

S04a_System Check_H3500_230115

DUT: Dipole 3500 MHz; Type:D3500V2; SN: 1007

Communication System: UID 0, CW; Frequency: 3500 MHz;Duty Cycle: 1:1
Medium: H33T50N4_0115 Medium parameters used: f = 3500 MHz; σ = 2.737 S/m; ε_r = 38.629; ρ = 1000 kg/m^3
Ambient Temperature：22.2 ℃ ； Liquid Temperature：21.6 ℃

DASY5 Configuration:
- Probe: EX3DV4 - SN7736; ConvF(7.02, 7.02, 7.02) @ 3500 MHz; Calibrated: 2022/11/15
- Sensor-Surface: 1.4mm (Mechanical Surface Detection)
- Electronics: DAE4 Sn1698; Calibrated: 2022/11/17
- Phantom: ELI_Phantom_1204; Type: QD OVA 002 Ax; Serial: 1204
- Measurement SW: DASY52, Version 52.10 (4); SEMCAD X Version 14.6.14 (7501)

Pin=50mW/Area Scan (81x81x1): Interpolated grid: dx=1.200 mm, dy=1.200 mm
Maximum value of SAR (interpolated) = 5.14 W/kg

Pin=50mW/Zoom Scan (7x7x6)/Cube 0: Measurement grid: dx=5mm, dy=5mm, dz=2.5mm
Reference Value = 44.26 V/m; Power Drift = 0.03 dB
Peak SAR (extrapolated) = 6.98 W/kg
SAR(1 g) = 3.31 W/kg; SAR(10 g) = 1.32 W/kg (SAR corrected for target medium)
Maximum value of SAR (measured) = 5.26 W/kg

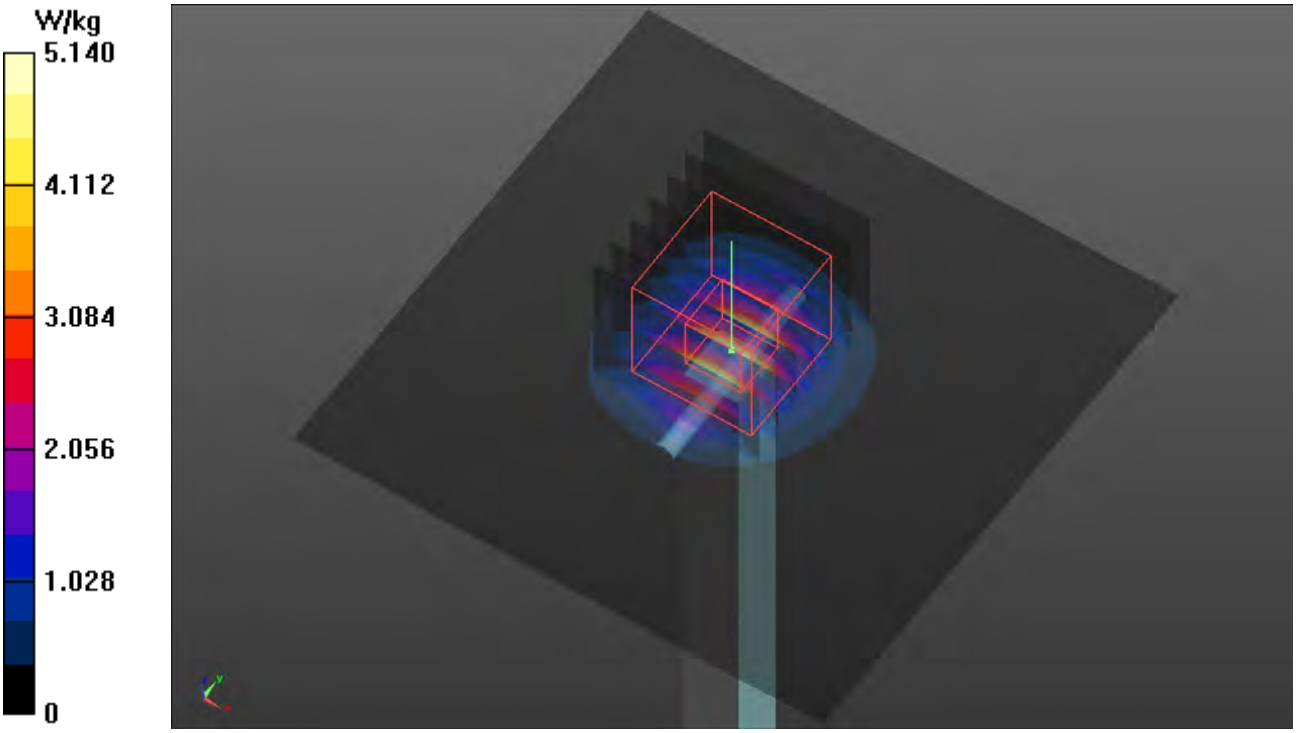

Test Laboratory: Bureau Veritas ADT SAR/HAC Testing Lab Date: 2023/01/15

S04b_System Check_H3700_230115

DUT: Dipole 3700 MHz; Type: D3700V2; SN: 1017

Communication System: UID 0, CW; Frequency: 3700 MHz;Duty Cycle: 1:1
Medium: H33T50N4_0115 Medium parameters used: f = 3700 MHz; σ = 2.914 S/m; ε_r = 38.33; ρ = 1000 kg/m^3
Ambient Temperature：22.2 ℃ ； Liquid Temperature：21.6 ℃

DASY5 Configuration:
- Probe: EX3DV4 - SN7736; ConvF(6.93, 6.93, 6.93) @ 3700 MHz; Calibrated: 2022/11/15
- Sensor-Surface: 1.4mm (Mechanical Surface Detection)
- Electronics: DAE4 Sn1698; Calibrated: 2022/11/17
- Phantom: ELI_Phantom_1204; Type: QD OVA 002 Ax; Serial: 1204
- Measurement SW: DASY52, Version 52.10 (4); SEMCAD X Version 14.6.14 (7501)

Pin=50mW/Area Scan (81x81x1): Interpolated grid: dx=1.200 mm, dy=1.200 mm
Maximum value of SAR (interpolated) = 5.41 W/kg

Pin=50mW/Zoom Scan (7x7x6)/Cube 0: Measurement grid: dx=5mm, dy=5mm, dz=2.5mm
Reference Value = 44.76 V/m; Power Drift = 0.03 dB
Peak SAR (extrapolated) = 7.51 W/kg
SAR(1 g) = 3.37 W/kg; SAR(10 g) = 1.31 W/kg (SAR corrected for target medium)
Maximum value of SAR (measured) = 5.51 W/kg

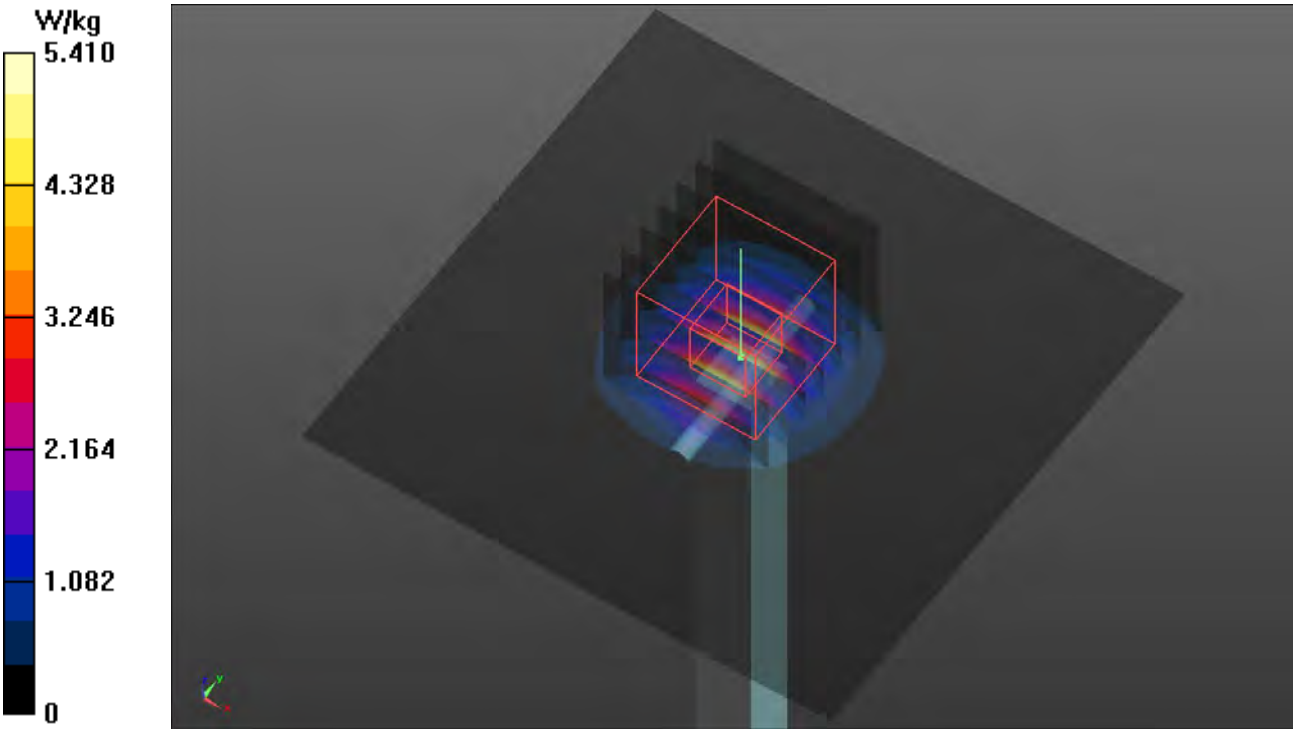

Test Laboratory: Bureau Veritas ADT SAR/HAC Testing Lab Date: 2023/01/15

S05 System Check_H1900_230115

DUT: Dipole 1900 MHz; Type: D1900V2; SN: 5d036

Communication System: UID 0, CW; Frequency: 1900 MHz;Duty Cycle: 1:1
Medium: H06T27N1_0115 Medium parameters used: f = 1900 MHz; σ = 1.475 S/m; ε_r = 39.641; ρ = 1000 kg/m^3
Ambient Temperature：22.6 ℃ ； Liquid Temperature：21.5 ℃

DASY5 Configuration:
- Probe: EX3DV4 - SN3650; ConvF(8.18, 8.18, 8.18) @ 1900 MHz; Calibrated: 2022/03/24
- Sensor-Surface: 1.4mm (Mechanical Surface Detection)
- Electronics: DAE4 Sn861; Calibrated: 2022/03/23
- Phantom: ELI Phantom_1206; Type: QDOVA001BB;
- Measurement SW: DASY52, Version 52.10 (4); SEMCAD X Version 14.6.14 (7501)

Pin=50mW/Area Scan (61x61x1): Interpolated grid: dx=1.500 mm, dy=1.500 mm
Maximum value of SAR (interpolated) = 3.07 W/kg

Pin=50mW/Zoom Scan (5x5x7)/Cube 0: Measurement grid: dx=8mm, dy=8mm, dz=5mm
Reference Value = 45.74 V/m; Power Drift = 0.01 dB
Peak SAR (extrapolated) = 3.72 W/kg
SAR(1 g) = 1.93 W/kg; SAR(10 g) = 1.01 W/kg (SAR corrected for target medium)
Maximum value of SAR (measured) = 3.13 W/kg

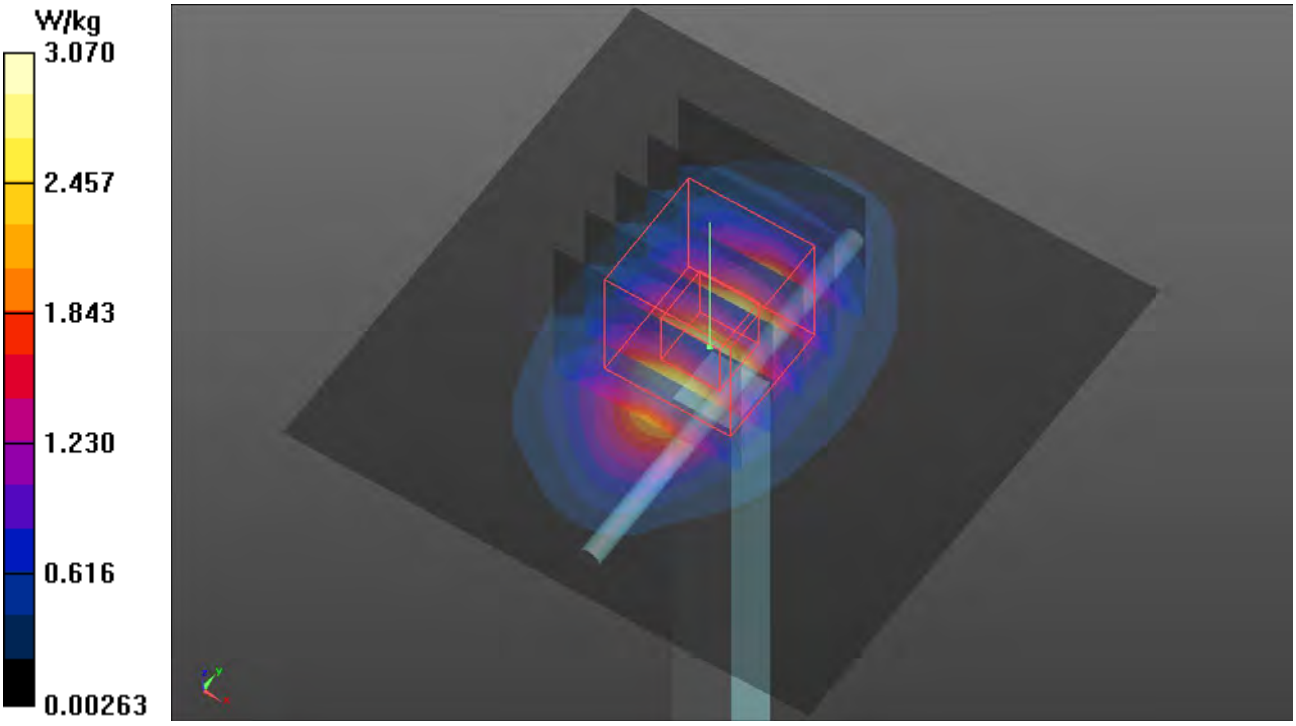

Test Laboratory: Bureau Veritas ADT SAR/HAC Testing Lab Date: 2023/01/15

S06 System Check_H2600_230115

DUT: Dipole 2600 MHz; Type: D2600V2; SN: 1020

Communication System: UID 0, CW; Frequency: 2600 MHz;Duty Cycle: 1:1
Medium: H06T27N1_0115 Medium parameters used: f = 2600 MHz; σ = 1.964 S/m; ε_r = 38.683; ρ = 1000 kg/m^3
Ambient Temperature：22.6 ℃ ； Liquid Temperature：21.5 ℃

DASY5 Configuration:
- Probe: EX3DV4 - SN3650; ConvF(7.59, 7.59, 7.59) @ 2600 MHz; Calibrated: 2022/03/24
- Sensor-Surface: 1.4mm (Mechanical Surface Detection)
- Electronics: DAE4 Sn861; Calibrated: 2022/03/23
- Phantom: ELI Phantom_1206; Type: QDOVA001BB
- Measurement SW: DASY52, Version 52.10 (4); SEMCAD X Version 14.6.14 (7501)

Pin=50mW/Area Scan (81x81x1): Interpolated grid: dx=1.200 mm, dy=1.200 mm
Maximum value of SAR (interpolated) = 4.52 W/kg

Pin=50mW/Zoom Scan (7x7x7)/Cube 0: Measurement grid: dx=5mm, dy=5mm, dz=5mm
Reference Value = 48.97 V/m; Power Drift = 0.02 dB
Peak SAR (extrapolated) = 5.69 W/kg
SAR(1 g) = 2.67 W/kg; SAR(10 g) = 1.2 W/kg (SAR corrected for target medium)
Maximum value of SAR (measured) = 4.57 W/kg

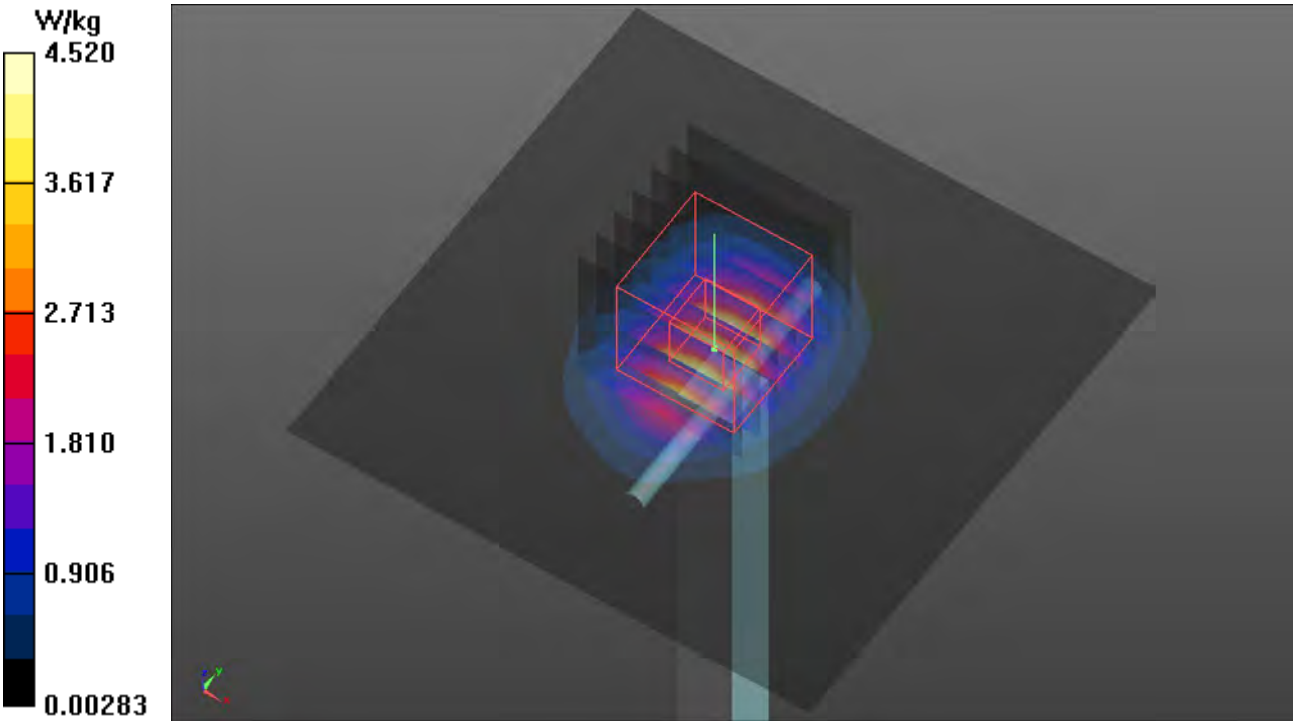

Test Laboratory: Bureau Veritas ADT SAR/HAC Testing Lab Date: 2023/01/15

S07 System Check_H2600_230115

DUT: Dipole 2600 MHz; Type: D2600V2; SN: 1020

Communication System: UID 0, CW; Frequency: 2600 MHz;Duty Cycle: 1:1
Medium: H06T27N1_0115 Medium parameters used: f = 2600 MHz; σ = 1.964 S/m; ε_r = 38.683; ρ = 1000 kg/m^3
Ambient Temperature：22.6 ℃ ； Liquid Temperature：21.5 ℃

DASY5 Configuration:
- Probe: EX3DV4 - SN3650; ConvF(7.59, 7.59, 7.59) @ 2600 MHz; Calibrated: 2022/03/24
- Sensor-Surface: 1.4mm (Mechanical Surface Detection)
- Electronics: DAE4 Sn861; Calibrated: 2022/03/23
- Phantom: ELI Phantom_1206; Type: QDOVA001BB
- Measurement SW: DASY52, Version 52.10 (4); SEMCAD X Version 14.6.14 (7501)

Pin=50mW/Area Scan (81x81x1): Interpolated grid: dx=1.200 mm, dy=1.200 mm
Maximum value of SAR (interpolated) = 4.52 W/kg

Pin=50mW/Zoom Scan (7x7x7)/Cube 0: Measurement grid: dx=5mm, dy=5mm, dz=5mm
Reference Value = 48.97 V/m; Power Drift = 0.02 dB
Peak SAR (extrapolated) = 5.69 W/kg
SAR(1 g) = 2.67 W/kg; SAR(10 g) = 1.2 W/kg (SAR corrected for target medium)
Maximum value of SAR (measured) = 4.57 W/kg

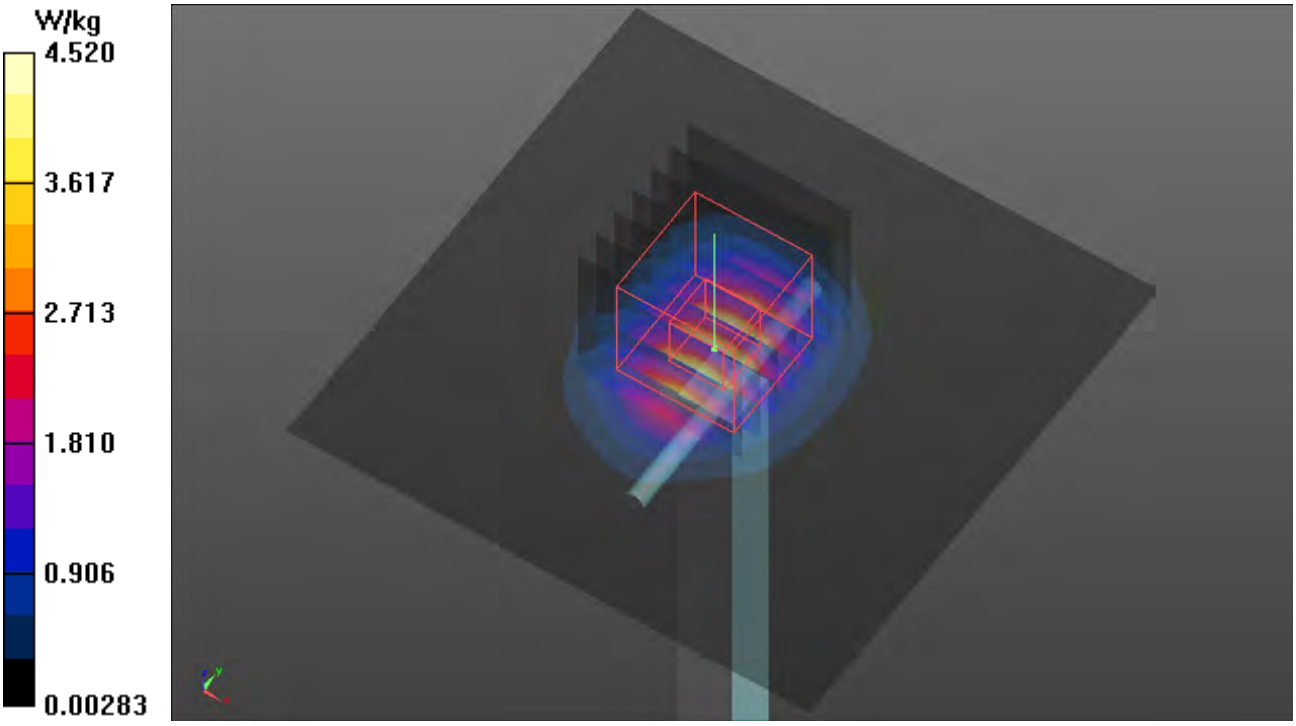

Test Laboratory: Bureau Veritas ADT SAR/HAC Testing Lab Date: 2023/01/15

S08 System Check_H1750_230115

DUT: Dipole 1750 MHz; Type: D1750V2; SN: 1055

Communication System: UID 0, CW; Frequency: 1750 MHz;Duty Cycle: 1:1
Medium: H06T27N1_0115 Medium parameters used: f = 1750 MHz; σ = 1.394 S/m; ε_r = 39.86; ρ = 1000 kg/m^3
Ambient Temperature：22.6 ℃ ； Liquid Temperature：21.5 ℃

DASY5 Configuration:
- Probe: EX3DV4 - SN3650; ConvF(8.5, 8.5, 8.5) @ 1750 MHz; Calibrated: 2022/03/24
- Sensor-Surface: 1.4mm (Mechanical Surface Detection)
- Electronics: DAE4 Sn861; Calibrated: 2022/03/23
- Phantom: ELI Phantom_1206; Type: QDOVA001BB
- Measurement SW: DASY52, Version 52.10 (4); SEMCAD X Version 14.6.14 (7501)

Pin=50mW/Area Scan (61x61x1): Interpolated grid: dx=1.500 mm, dy=1.500 mm
Maximum value of SAR (interpolated) = 2.79 W/kg

Pin=50mW/Zoom Scan (5x5x7)/Cube 0: Measurement grid: dx=8mm, dy=8mm, dz=5mm
Reference Value = 45.53 V/m; Power Drift = -0.01 dB
Peak SAR (extrapolated) = 3.33 W/kg
SAR(1 g) = 1.8 W/kg; SAR(10 g) = 0.951 W/kg (SAR corrected for target medium)
Maximum value of SAR (measured) = 2.81 W/kg

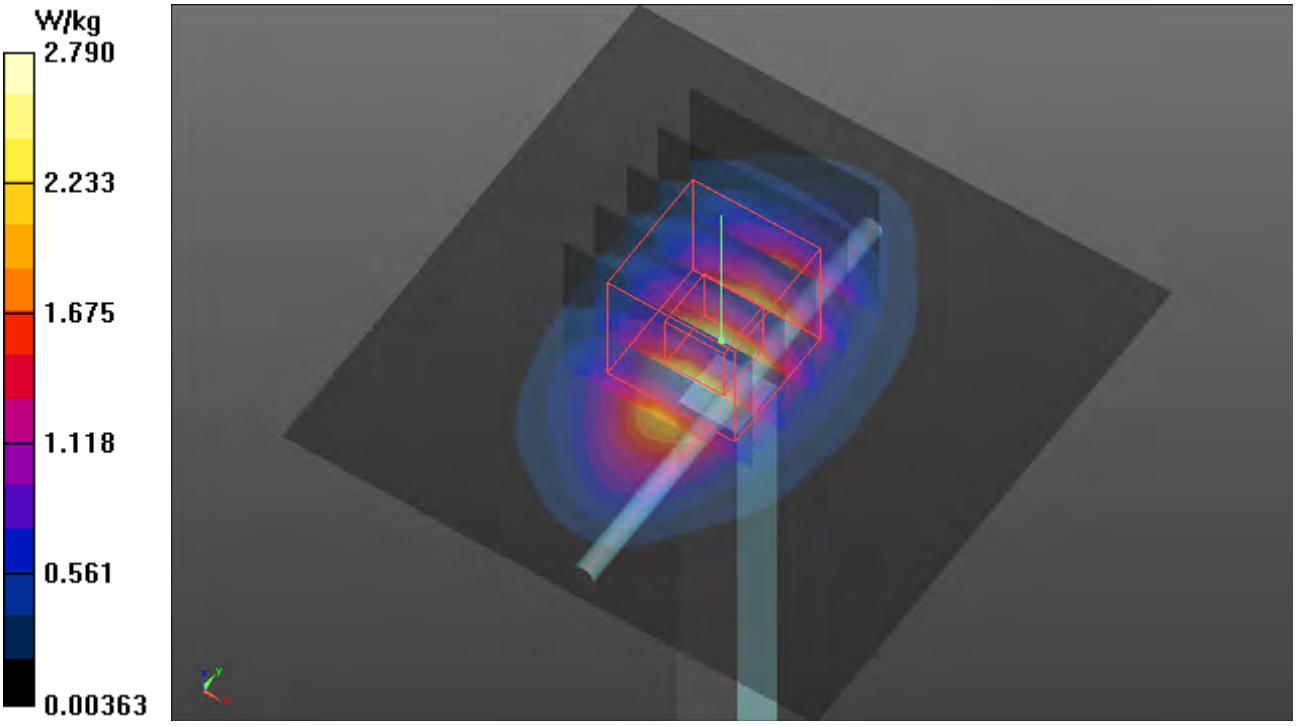

Test Laboratory: Bureau Veritas ADT SAR/HAC Testing Lab Date: 2023/01/09

S20 System Check_H2450_230109

DUT: Dipole 2450 MHz; Type: D2450V2; SN: 737

Communication System: UID 0, CW; Frequency: 2450 MHz;Duty Cycle: 1:1
Medium: H06T27N3_0109 Medium parameters used: f = 2450 MHz; σ = 1.787 S/m; ε_r = 40.803; ρ = 1000 kg/m^3
Ambient Temperature：22.5 ℃ ；Liquid Temperature：20.9 ℃

DASY5 Configuration:
- Probe: EX3DV4 - SN7537; ConvF(7.61, 7.61, 7.61) @ 2450 MHz; Calibrated: 2022/04/27
- Sensor-Surface: 1.4mm (Mechanical Surface Detection)
- Electronics: DAE4 Sn1585; Calibrated: 2022/04/21
- Phantom: ELI Phantom_1245; Type: QDOVA002AA;
- Measurement SW: DASY52, Version 52.10 (4); SEMCAD X Version 14.6.14 (7483)

Pin=50mW/Area Scan (81x81x1): Interpolated grid: dx=1.200 mm, dy=1.200 mm
Maximum value of SAR (interpolated) = 4.14 W/kg

Pin=50mW/Zoom Scan (7x7x7)/Cube 0: Measurement grid: dx=5mm, dy=5mm, dz=5mm
Reference Value = 50.36 V/m; Power Drift = -0.06 dB
Peak SAR (extrapolated) = 5.06 W/kg
SAR(1 g) = 2.53 W/kg; SAR(10 g) = 1.18 W/kg (SAR corrected for target medium)
Maximum value of SAR (measured) = 4.14 W/kg

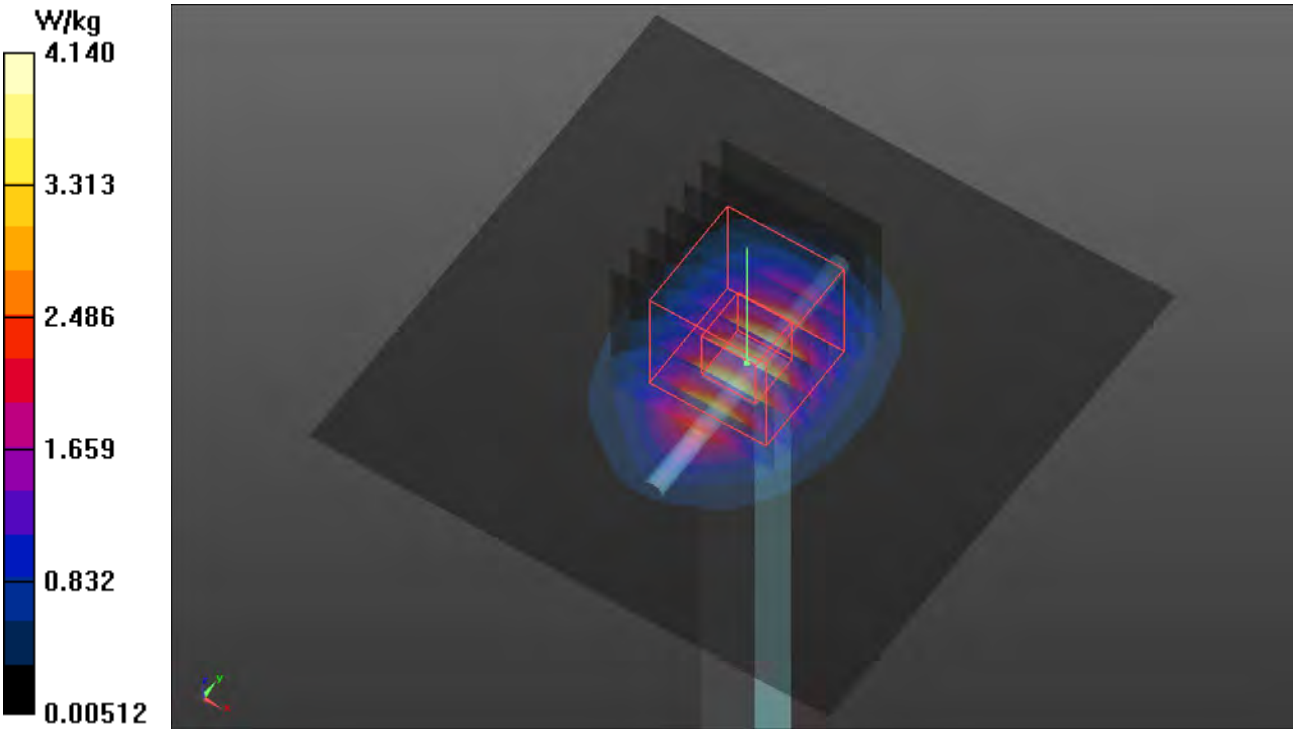

Test Laboratory: Bureau Veritas ADT SAR/HAC Testing Lab Date: 2023/01/10

S21 System Check_H5250_230110

DUT: Dipole 5 GHz; Type: D5GHzV2; SN: 1019

Communication System: UID 0, CW; Frequency: 5250 MHz;Duty Cycle: 1:1
Medium: H51T72N3_0110 Medium parameters used: f = 5250 MHz; σ = 4.552 S/m; ε_r = 37.519; ρ = 1000 kg/m^3
Ambient Temperature：22.4 ℃ ；Liquid Temperature：20.8 ℃

DASY5 Configuration:
- Probe: EX3DV4 - SN7537; ConvF(5.54, 5.54, 5.54) @ 5250 MHz; Calibrated: 2022/04/27
- Sensor-Surface: 1.4mm (Mechanical Surface Detection)
- Electronics: DAE4 Sn1585; Calibrated: 2022/04/21
- Phantom: ELI Phantom_1245; Type: QDOVA002AA;
- Measurement SW: DASY52, Version 52.10 (4); SEMCAD X Version 14.6.14 (7483)

Pin=50mW/Area Scan (91x91x1): Interpolated grid: dx=1.000 mm, dy=1.000 mm
Maximum value of SAR (interpolated) = 8.83 W/kg

Pin=50mW/Zoom Scan (7x7x7)/Cube 0: Measurement grid: dx=4mm, dy=4mm, dz=1.4mm
Reference Value = 49.69 V/m; Power Drift = 0.11 dB
Peak SAR (extrapolated) = 15.0 W/kg
SAR(1 g) = 3.86 W/kg; SAR(10 g) = 1.12 W/kg (SAR corrected for target medium)
Maximum value of SAR (measured) = 9.53 W/kg

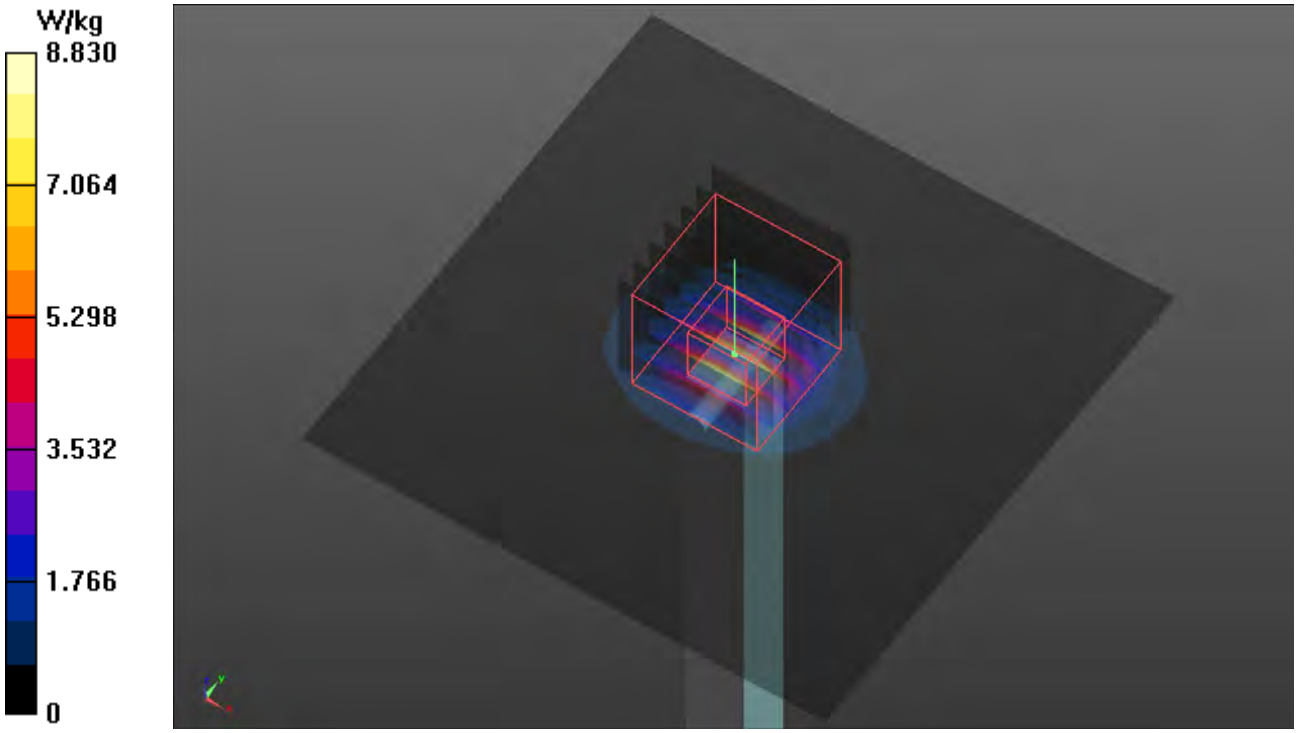

Test Laboratory: Bureau Veritas ADT SAR/HAC Testing Lab Date: 2023/01/10

S22 System Check_H5600_230110

DUT: Dipole 5 GHz; Type: D5GHzV2; SN: 1019

Communication System: UID 0, CW; Frequency: 5600 MHz;Duty Cycle: 1:1
Medium: H51T72N3_0110 Medium parameters used: f = 5600 MHz; σ = 4.942 S/m; ε_r = 36.935; ρ = 1000 kg/m^3
Ambient Temperature：22.4 ℃ ；Liquid Temperature：20.8 ℃

DASY5 Configuration:
- Probe: EX3DV4 - SN7537; ConvF(4.8, 4.8, 4.8) @ 5600 MHz; Calibrated: 2022/04/27
- Sensor-Surface: 1.4mm (Mechanical Surface Detection)
- Electronics: DAE4 Sn1585; Calibrated: 2022/04/21
- Phantom: ELI Phantom_1245; Type: QDOVA002AA;
- Measurement SW: DASY52, Version 52.10 (4); SEMCAD X Version 14.6.14 (7483)

Pin=50mW/Area Scan (91x91x1): Interpolated grid: dx=1.000 mm, dy=1.000 mm
Maximum value of SAR (interpolated) = 10.7 W/kg

Pin=50mW/Zoom Scan (7x7x7)/Cube 0: Measurement grid: dx=4mm, dy=4mm, dz=1.4mm
Reference Value = 50.99 V/m; Power Drift = -0.13 dB
Peak SAR (extrapolated) = 18.2 W/kg
SAR(1 g) = 4.37 W/kg; SAR(10 g) = 1.26 W/kg (SAR corrected for target medium)
Maximum value of SAR (measured) = 11.2 W/kg

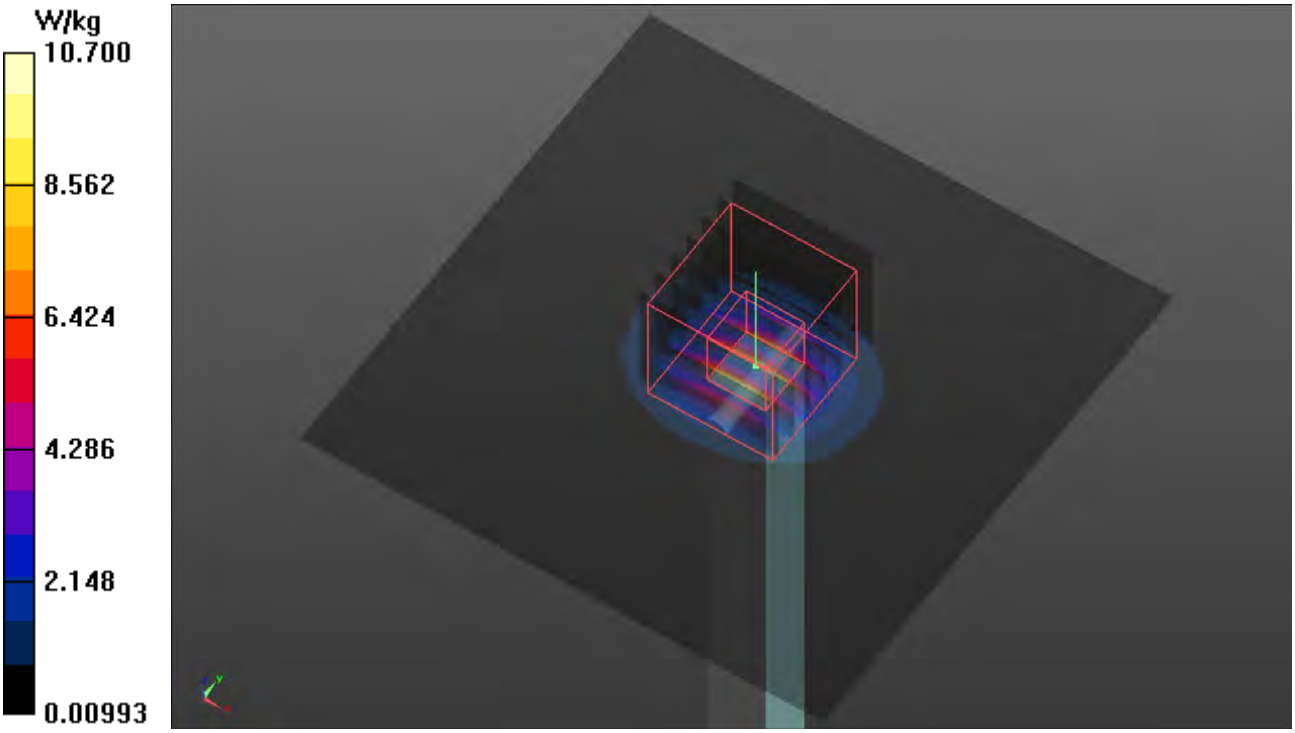

Test Laboratory: Bureau Veritas ADT SAR/HAC Testing Lab Date: 2023/01/10

S23 System Check_H5750_230110

DUT: Dipole 5 GHz; Type: D5GHzV2; SN: 1019

Communication System: UID 0, CW; Frequency: 5750 MHz;Duty Cycle: 1:1
Medium: H51T72N3_0110 Medium parameters used: f = 5750 MHz; σ = 5.116 S/m; ε_r = 36.684; ρ = 1000 kg/m^3
Ambient Temperature：22.4 ℃ ；Liquid Temperature：20.8 ℃

DASY5 Configuration:
- Probe: EX3DV4 - SN7537; ConvF(4.97, 4.97, 4.97) @ 5750 MHz; Calibrated: 2022/04/27
- Sensor-Surface: 1.4mm (Mechanical Surface Detection)
- Electronics: DAE4 Sn1585; Calibrated: 2022/04/21
- Phantom: ELI Phantom_1245; Type: QDOVA002AA;
- Measurement SW: DASY52, Version 52.10 (4); SEMCAD X Version 14.6.14 (7483)

Pin=50mW/Area Scan (91x91x1): Interpolated grid: dx=1.000 mm, dy=1.000 mm
Maximum value of SAR (interpolated) = 9.48 W/kg

Pin=50mW/Zoom Scan (7x7x7)/Cube 0: Measurement grid: dx=4mm, dy=4mm, dz=1.4mm
Reference Value = 48.76 V/m; Power Drift = -0.01 dB
Peak SAR (extrapolated) = 17.5 W/kg
SAR(1 g) = 3.89 W/kg; SAR(10 g) = 1.12 W/kg (SAR corrected for target medium)
Maximum value of SAR (measured) = 10.1 W/kg

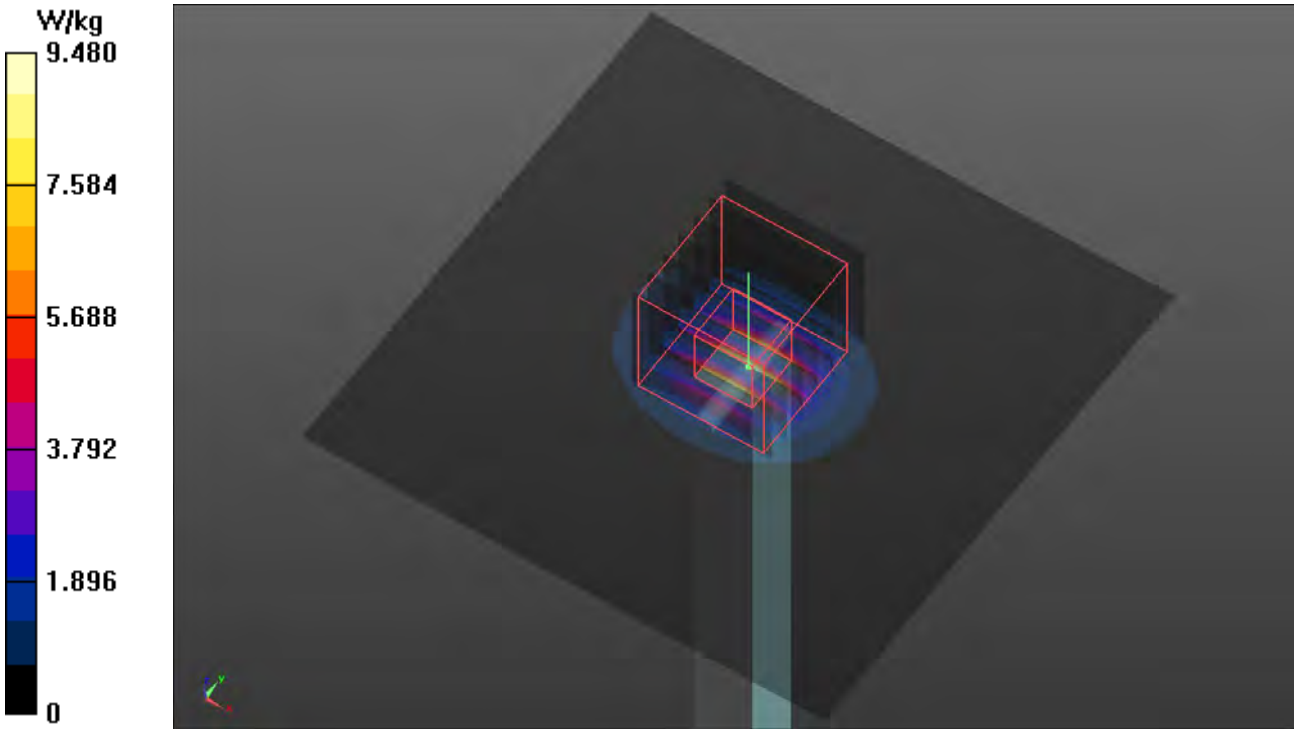

Test Laboratory: Bureau Veritas ADT SAR/HAC Testing Lab Date: 2023/01/10

S24a System Check_H5750_230110

DUT: Dipole 5 GHz; Type: D5GHzV2; SN: 1019

Communication System: UID 0, CW; Frequency: 5750 MHz;Duty Cycle: 1:1
Medium: H51T72N3_0110 Medium parameters used: f = 5750 MHz; σ = 5.116 S/m; ε_r = 36.684; ρ = 1000 kg/m^3
Ambient Temperature：22.4 ℃ ；Liquid Temperature：20.8 ℃

DASY5 Configuration:
- Probe: EX3DV4 - SN7537; ConvF(4.97, 4.97, 4.97) @ 5750 MHz; Calibrated: 2022/04/27
- Sensor-Surface: 1.4mm (Mechanical Surface Detection)
- Electronics: DAE4 Sn1585; Calibrated: 2022/04/21
- Phantom: ELI Phantom_1245; Type: QDOVA002AA;
- Measurement SW: DASY52, Version 52.10 (4); SEMCAD X Version 14.6.14 (7483)

Pin=50mW/Area Scan (91x91x1): Interpolated grid: dx=1.000 mm, dy=1.000 mm
Maximum value of SAR (interpolated) = 9.48 W/kg

Pin=50mW/Zoom Scan (7x7x7)/Cube 0: Measurement grid: dx=4mm, dy=4mm, dz=1.4mm
Reference Value = 48.76 V/m; Power Drift = -0.01 dB
Peak SAR (extrapolated) = 17.5 W/kg
SAR(1 g) = 3.89 W/kg; SAR(10 g) = 1.12 W/kg (SAR corrected for target medium)
Maximum value of SAR (measured) = 10.1 W/kg

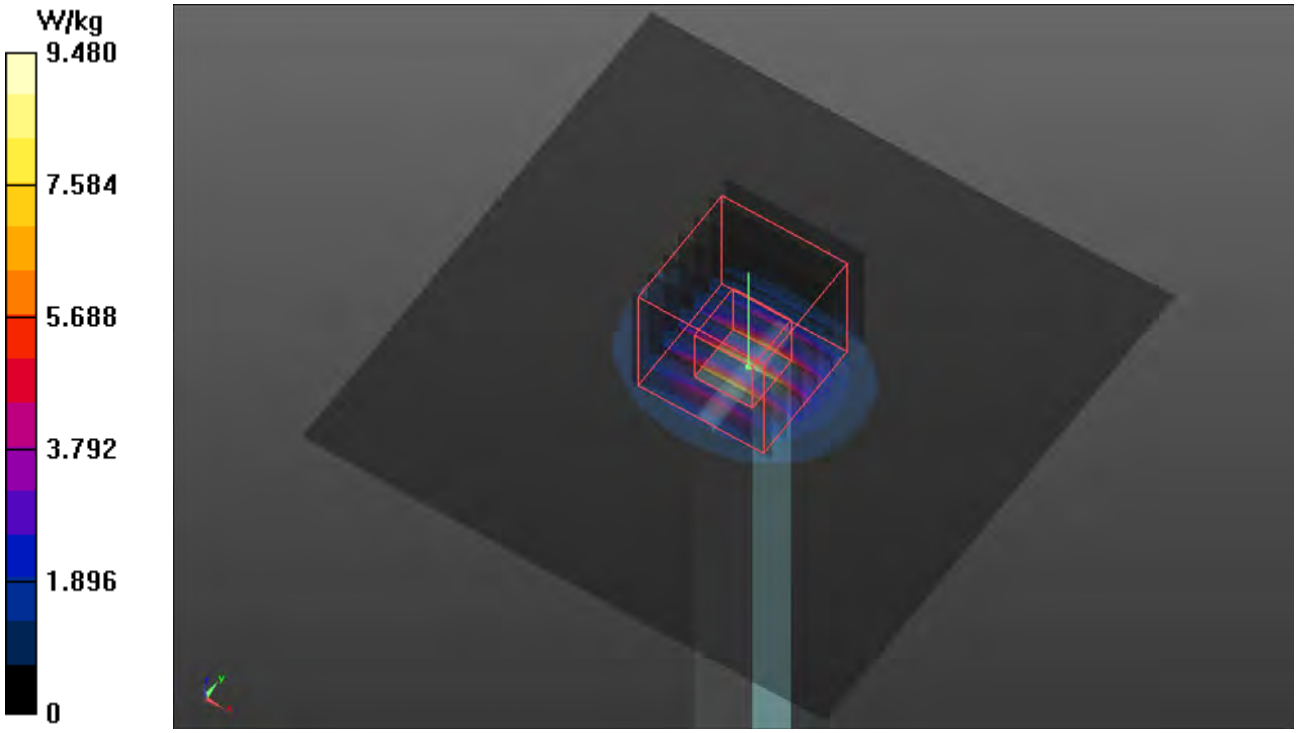

Measurement Report
S24b System Check_H6.5GHz_230110
Device under Test Properties

Model, Manufacturer	Dimensions [mm]	IMEI	DUT Type
Dipole,	50.0 x 10.0 x 8.0		-

Exposure Conditions

Phantom Section, TSL	Position, Test Distance [mm]	Band	Group, UID	Frequency [MHz], Channel Number	Conversion Factor	TSL Conductivity [S/m]	TSL Permittivity
Flat, HSL	,		, 0--	6500.0, 0	5.45	6.01	35.5

Hardware Setup

Phantom	TSL, Measured Date	Probe, Calibration Date	DAE, Calibration Date
ELI V5.0 (20deg probe tilt) - 1245	H51T72N3 , 2023-Jan-10	EX3DV4 - SN7537, 2022-04-27	DAE4 Sn1585, 2022-04-21

Scan Setup

	Area Scan	Zoom Scan
Grid Extents [mm]	45.0 x 90.0	22.0 x 22.0 x 22.0
Grid Steps [mm]	7.5 x 7.5	3.4 x 3.4 x 1.4
Sensor Surface [mm]	3.0	1.4

Measurement Results

	Area Scan	Zoom Scan
Date	2023-01-10	2023-01-10
psSAR1g [W/kg]	25.0	29.1
psSAR10g [W/kg]	5.04	5.39
psAPD (1.0cm2, sq) [W/m2]		291
psAPD (4.0cm2, sq) [W/m2]		133
Power Drift [dB]	-0.08	-0.01
M2/M1 [%]		51.9
Dist 3dB Peak [mm]		4.6

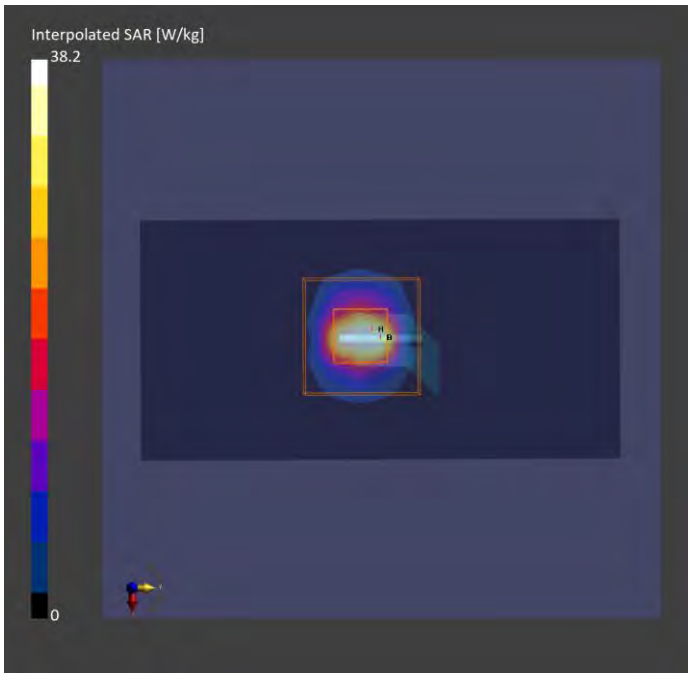

Test Laboratory: Bureau Veritas ADT SAR/HAC Testing Lab Date: 2023/01/09

S25 System Check_H2450_230109

DUT: Dipole 2450 MHz; Type: D2450V2; SN: 737

Communication System: UID 0, CW; Frequency: 2450 MHz;Duty Cycle: 1:1
Medium: H06T27N3_0109 Medium parameters used: f = 2450 MHz; σ = 1.787 S/m; ε_r = 40.803; ρ = 1000 kg/m^3
Ambient Temperature：22.5 ℃ ；Liquid Temperature：20.9 ℃

DASY5 Configuration:
- Probe: EX3DV4 - SN7537; ConvF(7.61, 7.61, 7.61) @ 2450 MHz; Calibrated: 2022/04/27
- Sensor-Surface: 1.4mm (Mechanical Surface Detection)
- Electronics: DAE4 Sn1585; Calibrated: 2022/04/21
- Phantom: ELI Phantom_1245; Type: QDOVA002AA;
- Measurement SW: DASY52, Version 52.10 (4); SEMCAD X Version 14.6.14 (7483)

Pin=50mW/Area Scan (81x81x1): Interpolated grid: dx=1.200 mm, dy=1.200 mm
Maximum value of SAR (interpolated) = 4.14 W/kg

Pin=50mW/Zoom Scan (7x7x7)/Cube 0: Measurement grid: dx=5mm, dy=5mm, dz=5mm
Reference Value = 50.36 V/m; Power Drift = -0.06 dB
Peak SAR (extrapolated) = 5.06 W/kg
SAR(1 g) = 2.53 W/kg; SAR(10 g) = 1.18 W/kg (SAR corrected for target medium)
Maximum value of SAR (measured) = 4.14 W/kg

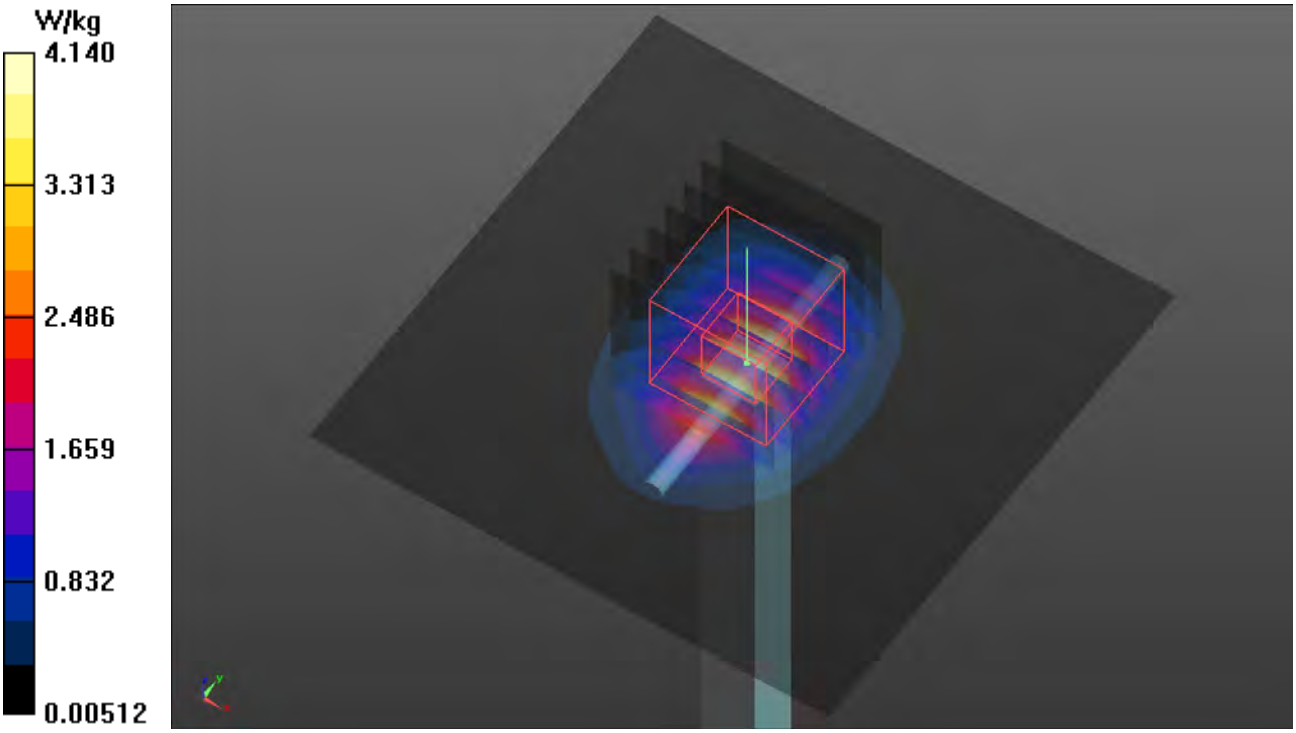

Measurement Report
S26 System Check_H6.5GHz_230110
Device under Test Properties

Model, Manufacturer	Dimensions [mm]	IMEI	DUT Type
Dipole,	50.0 x 10.0 x 8.0		-

Exposure Conditions

Phantom Section, TSL	Position, Test Distance [mm]	Band	Group, UID	Frequency [MHz], Channel Number	Conversion Factor	TSL Conductivity [S/m]	TSL Permittivity
Flat, HSL	,		, 0--	6500.0, 0	5.45	6.01	35.5

Hardware Setup

Phantom	TSL, Measured Date	Probe, Calibration Date	DAE, Calibration Date
ELI V5.0 (20deg probe tilt) - 1245	H51T72N3 , 2023-Jan-10	EX3DV4 - SN7537, 2022-04-27	DAE4 Sn1585, 2022-04-21

Scan Setup

	Area Scan	Zoom Scan
Grid Extents [mm]	45.0 x 90.0	22.0 x 22.0 x 22.0
Grid Steps [mm]	7.5 x 7.5	3.4 x 3.4 x 1.4
Sensor Surface [mm]	3.0	1.4

Measurement Results

	Area Scan	Zoom Scan
Date	2023-01-10	2023-01-10
psSAR1g [W/kg]	25.0	29.1
psSAR10g [W/kg]	5.04	5.39
psAPD (1.0cm2, sq) [W/m2]		291
psAPD (4.0cm2, sq) [W/m2]		133
Power Drift [dB]	-0.08	-0.01
M2/M1 [%]		51.9
Dist 3dB Peak [mm]		4.6

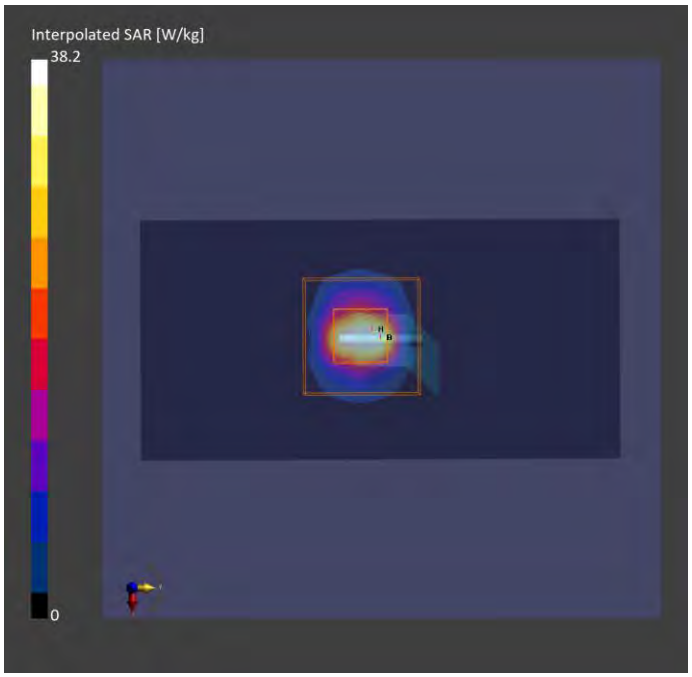

Measurement Report
S26 PD_System Check_10 GHz_2023.01.12
Device under Test Properties

Model, Manufacturer	Dimensions [mm]	IMEI	DUT Type
SPEAG, 5G Verification Source 10 GHz	100.0 x 100.0 x 170.0	SN: 1025	

Exposure Conditions

Phantom Section	Position, Test Distance [mm]	Band	Group, UID	Frequency [MHz], Channel Number	Conversion Factor
5G Air	FRONT, 10	Validation band	CW, 0--	10000.0, 10000	1.0

Hardware Setup

Phantom	Medium	Probe, Calibration Date	DAE, Calibration Date
mmWave- 1029	---Air	EUmmWV4 - SN9438_F1-55GHz, 2022-07-18	DAE4 Sn1341, 2022-07-19

Scan Setup

	5G Scan
Grid Extents [mm]	60.0 x 60.0
Grid Steps [lambda]	0.125 x 0.125
Sensor Surface [mm]	5.55

Measurement Results

	5G Scan
Date	2023-01-12
Avg. Area [cm^2]	4.00
psPDn+ [W/m^2]	51.6
psPDtot+ [W/m^2]	52.1
psPDmod+ [W/m^2]	52.4
E_{max} [V/m]	147
Power Drift [dB]	-0.11

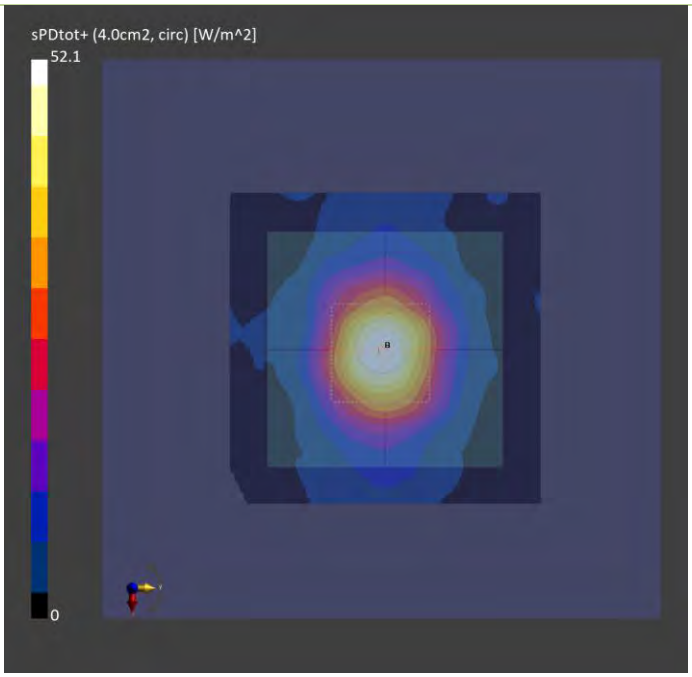

Appendix B. Plots of Measurement

The SAR plots for highest measured SAR in each exposure configuration, wireless mode and frequency band combination are shown as follows.

Test Laboratory: Bureau Veritas ADT SAR/HAC Testing Lab Date: 2023/01/15

P01 LTE 2_QPSK20M_Bottom of Laptop_0mm_Ch18900_50RB_OS0_Sample WNC_Ant 2

DUT: BERD-WTW-P22110656

Communication System: UID 10297 - AAE, LTE-FDD (SC-FDMA, 50% RB, 20 MHz, QPSK); Frequency: 1880 MHz;Duty Cycle: 1:3.81
Medium: H06T27N4_0115 Medium parameters used: f = 1880 MHz; σ = 1.454 S/m; ε_r = 42.115; ρ = 1000 kg/m^3
Ambient Temperature：22.2 ℃ ； Liquid Temperature：21.6 ℃

DASY5 Configuration:
- Probe: EX3DV4 - SN7736; ConvF(8.26, 8.26, 8.26) @ 1880 MHz; Calibrated: 2022/11/15
- Sensor-Surface: 1.4mm (Mechanical Surface Detection)
- Electronics: DAE4 Sn1698; Calibrated: 2022/11/17
- Phantom: ELI_Phantom_1204; Type: QD OVA 002 Ax; Serial: 1204
- Measurement SW: DASY52, Version 52.10 (4); SEMCAD X Version 14.6.14 (7501)

Area Scan (71x281x1): Interpolated grid: dx=1.500 mm, dy=1.500 mm
Maximum value of SAR (interpolated) = 0.119 W/kg

Zoom Scan (5x5x7)/Cube 0: Measurement grid: dx=8mm, dy=8mm, dz=5mm
Reference Value = 6.837 V/m; Power Drift = -0.17 dB
Peak SAR (extrapolated) = 0.0890 W/kg
SAR(1 g) = 0.025 W/kg; SAR(10 g) = 0.017 W/kg (SAR corrected for target medium)
Smallest distance from peaks to all points 3 dB below: Larger than measurement grid (> 16 mm)
Ratio of SAR at M2 to SAR at M1 = 64.4%
Maximum value of SAR (measured) = 0.0764 W/kg

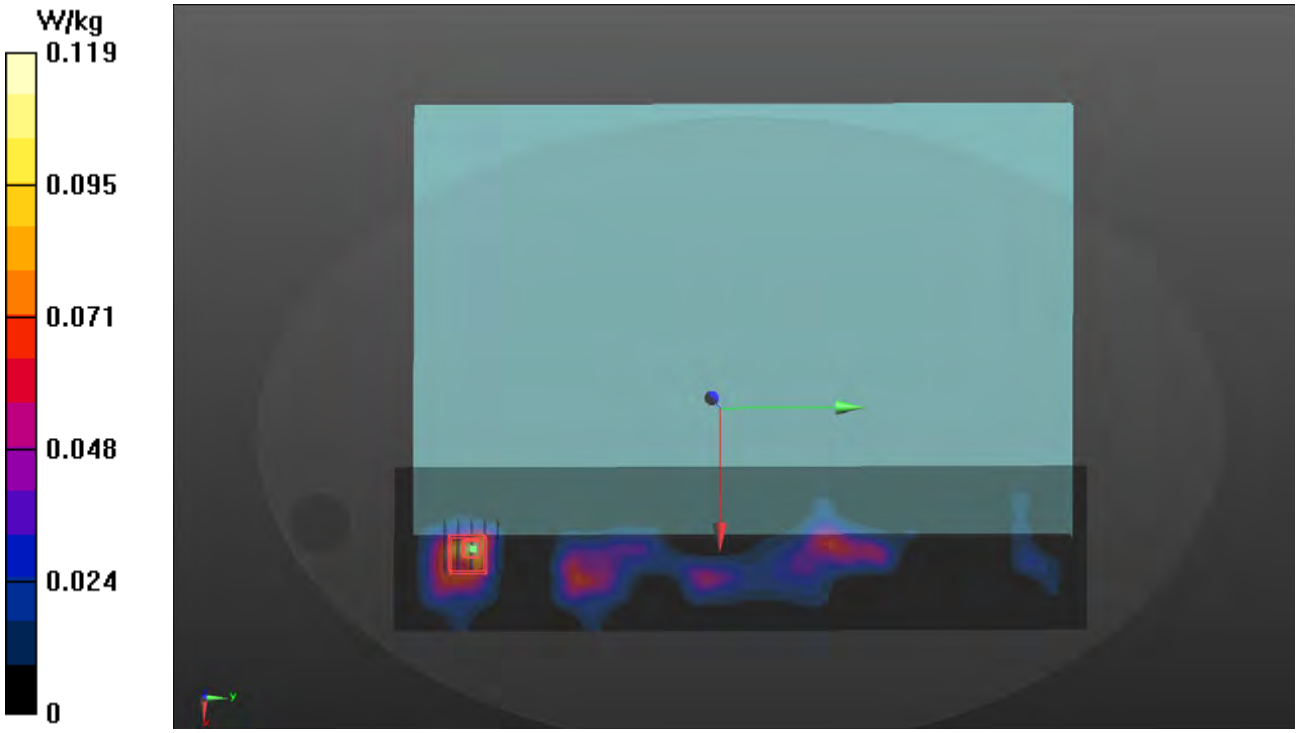

Test Laboratory: Bureau Veritas ADT SAR/HAC Testing Lab Date: 2023/01/15

P02 LTE 7_QPSK20M_Bottom of Laptop_0mm_Ch21100_50RB_OS0_Sample WNC_Ant 2

DUT: BERD-WTW-P22110656

Communication System: UID 10297 - AAE, LTE-FDD (SC-FDMA, 50% RB, 20 MHz, QPSK); Frequency: 2535 MHz;Duty Cycle: 1:3.81
Medium: H06T27N4_0115 Medium parameters used: f = 2535 MHz; σ = 1.922 S/m; ε_r = 41.24; ρ = 1000 kg/m^3
Ambient Temperature：22.2 ℃ ； Liquid Temperature：21.6 ℃

DASY5 Configuration:
- Probe: EX3DV4 - SN7736; ConvF(7.76, 7.76, 7.76) @ 2535 MHz; Calibrated: 2022/11/15
- Sensor-Surface: 1.4mm (Mechanical Surface Detection)
- Electronics: DAE4 Sn1698; Calibrated: 2022/11/17
- Phantom: ELI_Phantom_1204; Type: QD OVA 002 Ax; Serial: 1204
- Measurement SW: DASY52, Version 52.10 (4); SEMCAD X Version 14.6.14 (7501)

Area Scan (91x351x1): Interpolated grid: dx=1.200 mm, dy=1.200 mm
Maximum value of SAR (interpolated) = 0.0964 W/kg

Zoom Scan (7x7x7)/Cube 0: Measurement grid: dx=5mm, dy=5mm, dz=5mm
Reference Value = 6.298 V/m; Power Drift = -0.09 dB
Peak SAR (extrapolated) = 0.0820 W/kg
SAR(1 g) = 0.043 W/kg; SAR(10 g) = 0.024 W/kg (SAR corrected for target medium)
Smallest distance from peaks to all points 3 dB below: Larger than measurement grid (> 15 mm)
Ratio of SAR at M2 to SAR at M1 = 54.8%
Maximum value of SAR (measured) = 0.0666 W/kg

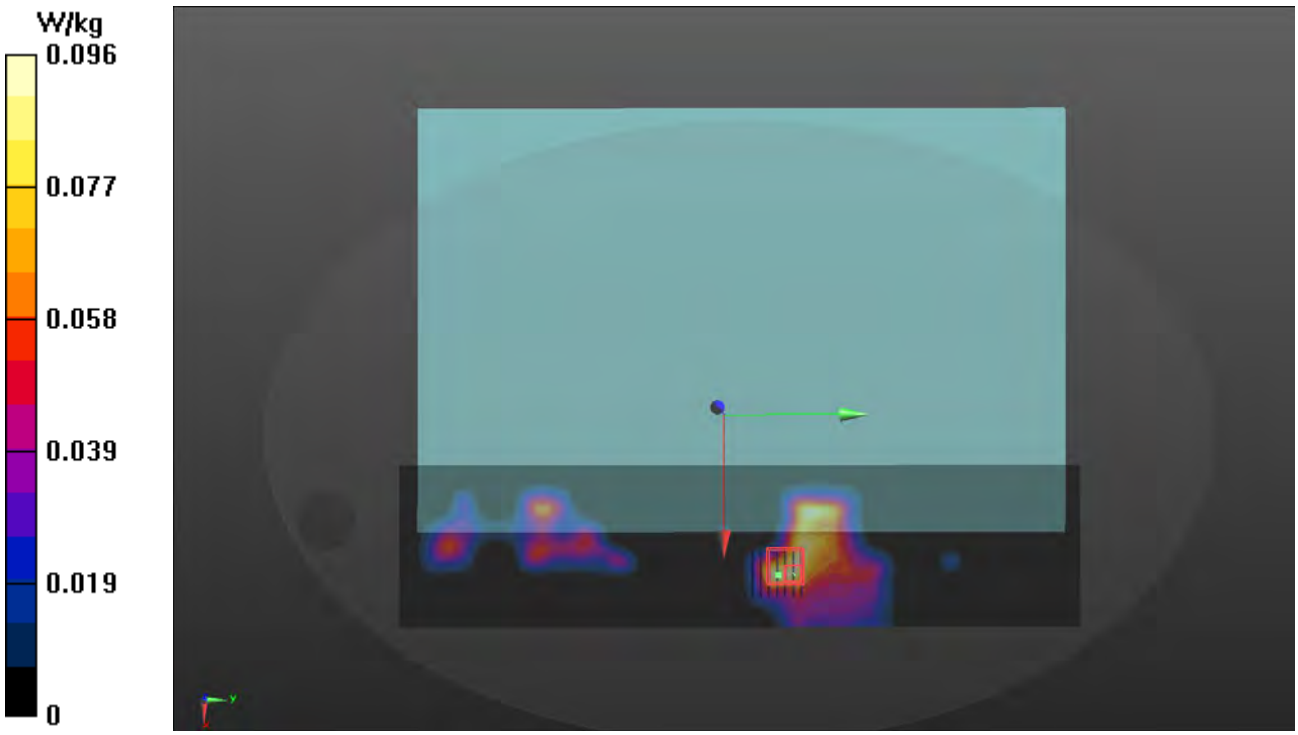

Test Laboratory: Bureau Veritas ADT SAR/HAC Testing Lab Date: 2023/01/15

P03 LTE 66_QPSK20M_Bottom of Laptop_0mm_Ch132572_1RB_OS0_Sample WNC_Ant 2

DUT: BERD-WTW-P22110656

Communication System: UID 10169 - CAF, LTE-FDD (SC-FDMA, 1 RB, 20 MHz, QPSK); Frequency: 1770 MHz;Duty Cycle: 1:3.74
Medium: H06T27N4_0115 Medium parameters used: f = 1770 MHz; σ = 1.392 S/m; ε_r = 42.267; ρ = 1000 kg/m^3
Ambient Temperature：22.2 ℃ ； Liquid Temperature：21.6 ℃

DASY5 Configuration:
- Probe: EX3DV4 - SN7736; ConvF(8.64, 8.64, 8.64) @ 1770 MHz; Calibrated: 2022/11/15
- Sensor-Surface: 1.4mm (Mechanical Surface Detection)
- Electronics: DAE4 Sn1698; Calibrated: 2022/11/17
- Phantom: ELI_Phantom_1204; Type: QD OVA 002 Ax; Serial: 1204
- Measurement SW: DASY52, Version 52.10 (4); SEMCAD X Version 14.6.14 (7501)

Area Scan (71x281x1): Interpolated grid: dx=1.500 mm, dy=1.500 mm
Maximum value of SAR (interpolated) = 0.157 W/kg

Zoom Scan (5x5x7)/Cube 0: Measurement grid: dx=8mm, dy=8mm, dz=5mm
Reference Value = 7.805 V/m; Power Drift = -0.02 dB
Peak SAR (extrapolated) = 0.119 W/kg
SAR(1 g) = 0.056 W/kg; SAR(10 g) = 0.031 W/kg (SAR corrected for target medium)
Smallest distance from peaks to all points 3 dB below = 11.2 mm
Ratio of SAR at M2 to SAR at M1 = 64.9%
Maximum value of SAR (measured) = 0.102 W/kg

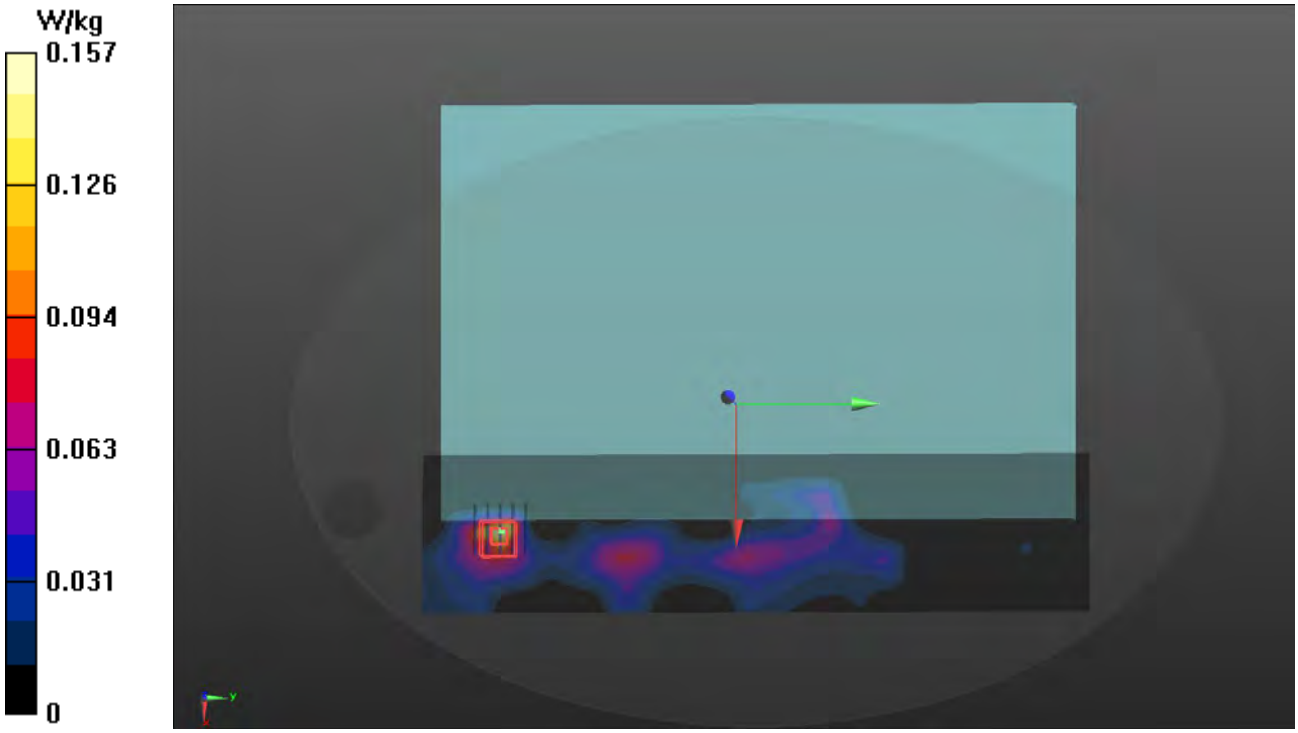

Test Laboratory: Bureau Veritas ADT SAR/HAC Testing Lab Date: 2023/01/15

P04 LTE 48_QPSK20M_Bottom of Laptop_0mm_Ch55340_1RB_OS0_Sample WNC_Ant 2

DUT: BERD-WTW-P22110656

Communication System: UID 10172 - CAH, LTE-TDD (SC-FDMA, 1 RB, 20 MHz, QPSK); Frequency: 3560 MHz;Duty Cycle: 1:8.33
Medium: H33T50N4_0115 Medium parameters used: f = 3560 MHz; σ = 2.79 S/m; ε_r = 38.536; ρ = 1000 kg/m^3
Ambient Temperature：22.2 ℃ ； Liquid Temperature：21.6 ℃

DASY5 Configuration:
- Probe: EX3DV4 - SN7736; ConvF(7.02, 7.02, 7.02) @ 3560 MHz; Calibrated: 2022/11/15
- Sensor-Surface: 1.4mm (Mechanical Surface Detection)
- Electronics: DAE4 Sn1698; Calibrated: 2022/11/17
- Phantom: ELI_Phantom_1204; Type: QD OVA 002 Ax; Serial: 1204
- Measurement SW: DASY52, Version 52.10 (4); SEMCAD X Version 14.6.14 (7501)

Area Scan (91x351x1): Interpolated grid: dx=1.200 mm, dy=1.200 mm
Maximum value of SAR (interpolated) = 0.101 W/kg

Zoom Scan (7x7x7)/Cube 0: Measurement grid: dx=5mm, dy=5mm, dz=2.5mm
Reference Value = 4.442 V/m; Power Drift = 0.05 dB
Peak SAR (extrapolated) = 0.0860 W/kg
SAR(1 g) = 0.020 W/kg; SAR(10 g) = 0.00879 W/kg (SAR corrected for target medium)
Smallest distance from peaks to all points 3 dB below: Larger than measurement grid (> 15 mm)
Ratio of SAR at M2 to SAR at M1 = 58.3%
Maximum value of SAR (measured) = 0.0593 W/kg

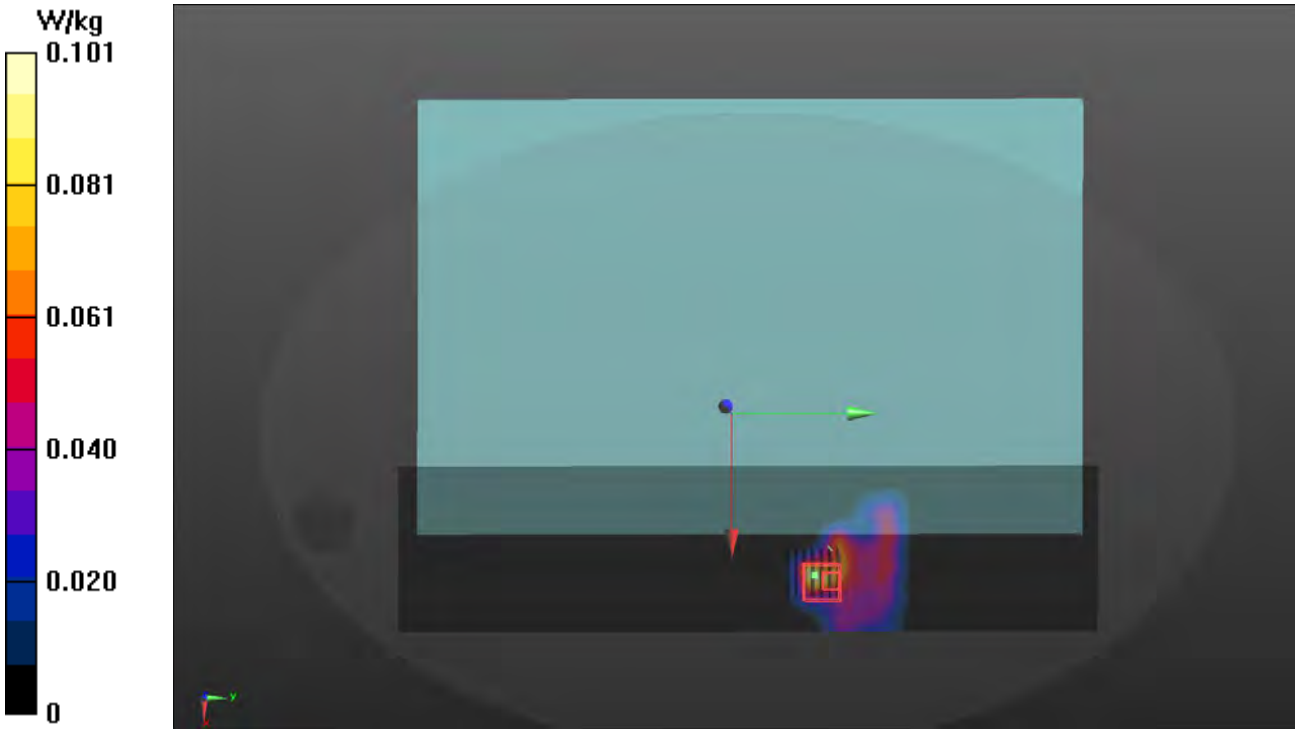

Test Laboratory: Bureau Veritas ADT SAR/HAC Testing Lab Date: 2023/01/15

P05 5GNR-n2_BPSK20M_Bottom of Laptop_0mm_Ch376000_1RB_OS1_Ant 2

DUT: BERD-WTW-P22110656

Communication System: UID 10931 - AAB, 5G NR (DFT-s-OFDM, 1 RB, 20 MHz, QPSK, 15 kHz); Frequency: 1880 MHz;Duty Cycle: 1:3.56
Medium: H06T27N1_0115 Medium parameters used: f = 1880 MHz; σ = 1.464 S/m; ε_r = 39.67; ρ = 1000 kg/m^3
Ambient Temperature：22.6 ℃ ； Liquid Temperature：21.5 ℃

DASY5 Configuration:
- Probe: EX3DV4 - SN3650; ConvF(8.18, 8.18, 8.18) @ 1880 MHz; Calibrated: 2022/03/24
- Sensor-Surface: 1.4mm (Mechanical Surface Detection)
- Electronics: DAE4 Sn861; Calibrated: 2022/03/23
- Phantom: ELI Phantom_1206; Type: QDOVA001BB;
- Measurement SW: DASY52, Version 52.10 (4); SEMCAD X Version 14.6.14 (7501)

Area Scan (71x281x1): Interpolated grid: dx=1.500 mm, dy=1.500 mm
Maximum value of SAR (interpolated) = 0.108 W/kg

Zoom Scan (5x5x7)/Cube 0: Measurement grid: dx=8mm, dy=8mm, dz=5mm
Reference Value = 8.877 V/m; Power Drift = -0.02 dB
Peak SAR (extrapolated) = 0.130 W/kg
SAR(1 g) = 0.021 W/kg; SAR(10 g) = 0.012 W/kg (SAR corrected for target medium)
Smallest distance from peaks to all points 3 dB below = 17 mm
Ratio of SAR at M2 to SAR at M1 = 61.6%
Maximum value of SAR (measured) = 0.109 W/kg

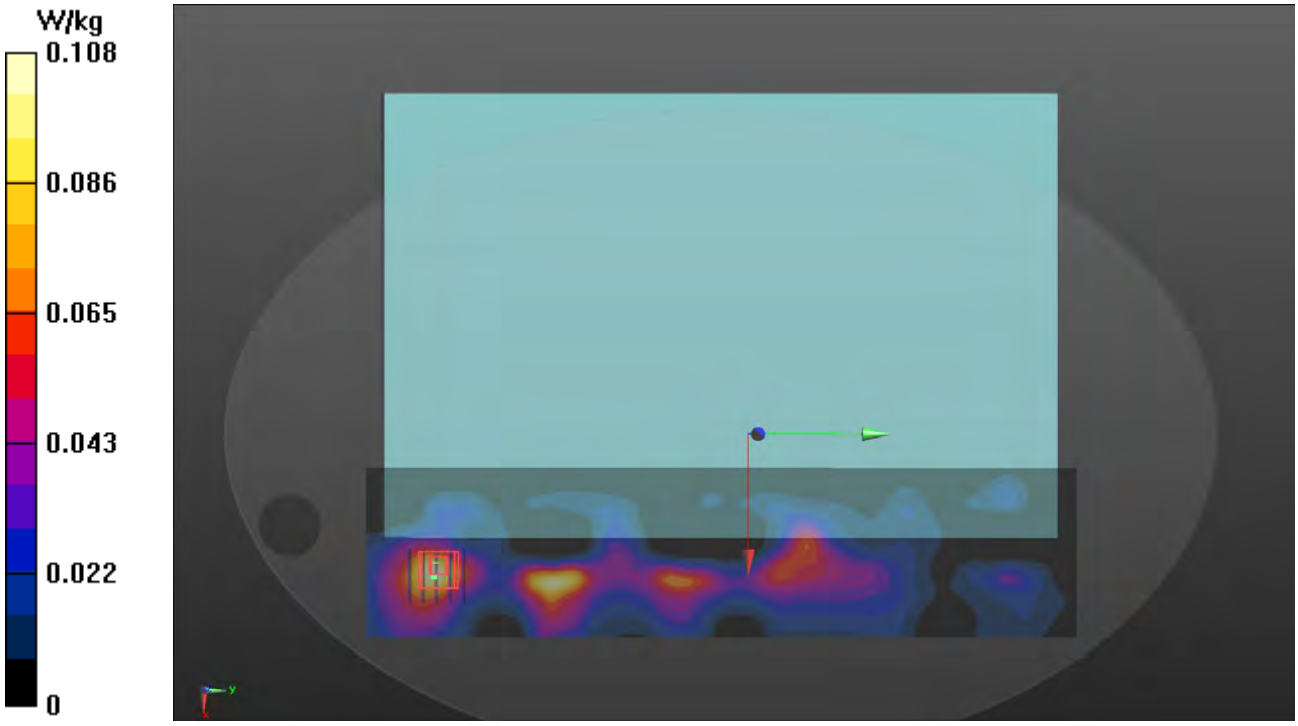

Test Laboratory: Bureau Veritas ADT SAR/HAC Testing Lab Date: 2023/01/15

P06 5GNR-n7_BPSK20M_Bottom of Laptop_0mm_Ch507000_1RB_OS1_Ant 2

DUT: BERD-WTW-P22110656

Communication System: UID 10931 - AAB, 5G NR (DFT-s-OFDM, 1 RB, 20 MHz, QPSK, 15 kHz); Frequency: 2535 MHz;Duty Cycle: 1:3.56
Medium: H06T27N1_0115 Medium parameters used: f = 2535 MHz; σ = 1.915 S/m; ε_r = 38.793; ρ = 1000 kg/m^3
Ambient Temperature：22.6 ℃ ； Liquid Temperature：21.5 ℃

DASY5 Configuration:
- Probe: EX3DV4 - SN3650; ConvF(7.59, 7.59, 7.59) @ 2535 MHz; Calibrated: 2022/03/24
- Sensor-Surface: 1.4mm (Mechanical Surface Detection)
- Electronics: DAE4 Sn861; Calibrated: 2022/03/23
- Phantom: ELI Phantom_1206; Type: QDOVA001BB;
- Measurement SW: DASY52, Version 52.10 (4); SEMCAD X Version 14.6.14 (7501)

Area Scan (91x351x1): Interpolated grid: dx=1.200 mm, dy=1.200 mm
Maximum value of SAR (interpolated) = 0.113 W/kg

Zoom Scan (7x7x7)/Cube 0: Measurement grid: dx=5mm, dy=5mm, dz=5mm
Reference Value = 7.492 V/m; Power Drift = -0.05 dB
Peak SAR (extrapolated) = 0.129 W/kg
SAR(1 g) = 0.032 W/kg; SAR(10 g) = 0.015 W/kg (SAR corrected for target medium)
Smallest distance from peaks to all points 3 dB below = 14.2 mm
Ratio of SAR at M2 to SAR at M1 = 51.7%
Maximum value of SAR (measured) = 0.104 W/kg

Test Laboratory: Bureau Veritas ADT SAR/HAC Testing Lab Date: 2023/01/15

P07 5GNR-n41_BPSK100M_Bottom of Laptop_0mm_Ch518598_1RB_OS1_Ant 2

DUT: BERD-WTW-P22110656

Communication System: UID 10973 - AAA, 5G NR (DFT-s-OFDM, 1 RB, 100 MHz, QPSK, 30 kHz); Frequency: 2592.99 MHz;Duty Cycle: 1:8.05
Medium: H06T27N1_0115 Medium parameters used: f = 2593 MHz; σ = 1.959 S/m; ε_r = 38.694; ρ = 1000 kg/m^3
Ambient Temperature：22.6 ℃ ； Liquid Temperature：21.5 ℃

DASY5 Configuration:
- Probe: EX3DV4 - SN3650; ConvF(7.59, 7.59, 7.59) @ 2592.99 MHz; Calibrated: 2022/03/24
- Sensor-Surface: 1.4mm (Mechanical Surface Detection)
- Electronics: DAE4 Sn861; Calibrated: 2022/03/23
- Phantom: ELI Phantom_1206; Type: QDOVA001BB;
- Measurement SW: DASY52, Version 52.10 (4); SEMCAD X Version 14.6.14 (7501)

Area Scan (91x351x1): Interpolated grid: dx=1.200 mm, dy=1.200 mm
Maximum value of SAR (interpolated) = 0.129 W/kg

Zoom Scan (7x7x7)/Cube 0: Measurement grid: dx=5mm, dy=5mm, dz=5mm
Reference Value = 7.715 V/m; Power Drift = 0.08 dB
Peak SAR (extrapolated) = 0.144 W/kg
SAR(1 g) = 0.035 W/kg; SAR(10 g) = 0.012 W/kg (SAR corrected for target medium)
Smallest distance from peaks to all points 3 dB below = 15 mm
Ratio of SAR at M2 to SAR at M1 = 51.8%
Maximum value of SAR (measured) = 0.116 W/kg

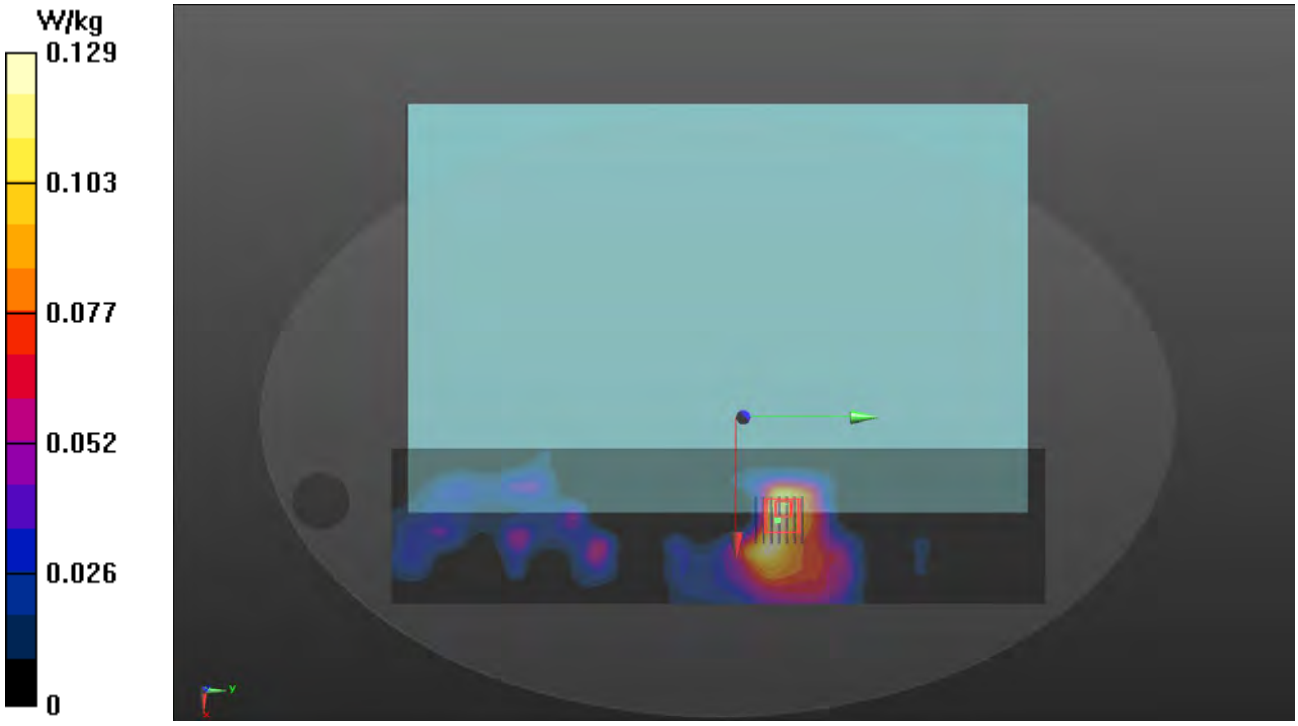

Test Laboratory: Bureau Veritas ADT SAR/HAC Testing Lab Date: 2023/01/15

P08 5GNR-n66_BPSK20M_Bottom of Laptop_0mm_Ch354000_1RB_OS1_Ant 2

DUT: BERD-WTW-P22110656

Communication System: UID 10931 - AAB, 5G NR (DFT-s-OFDM, 1 RB, 20 MHz, QPSK, 15 kHz); Frequency: 1770 MHz;Duty Cycle: 1:3.56
Medium: H06T27N1_0115 Medium parameters used: f = 1770 MHz; σ = 1.405 S/m; ε_r = 39.822; ρ = 1000 kg/m^3
Ambient Temperature：22.6 ℃ ； Liquid Temperature：21.5 ℃

DASY5 Configuration:
- Probe: EX3DV4 - SN3650; ConvF(8.5, 8.5, 8.5) @ 1770 MHz; Calibrated: 2022/03/24
- Sensor-Surface: 1.4mm (Mechanical Surface Detection)
- Electronics: DAE4 Sn861; Calibrated: 2022/03/23
- Phantom: ELI Phantom_1206; Type: QDOVA001BB;
- Measurement SW: DASY52, Version 52.10 (4); SEMCAD X Version 14.6.14 (7501)

Area Scan (71x281x1): Interpolated grid: dx=1.500 mm, dy=1.500 mm
Maximum value of SAR (interpolated) = 0.112 W/kg

Zoom Scan (5x5x7)/Cube 0: Measurement grid: dx=8mm, dy=8mm, dz=5mm
Reference Value = 8.941 V/m; Power Drift = -0.07 dB
Peak SAR (extrapolated) = 0.123 W/kg
SAR(1 g) = 0.039 W/kg; SAR(10 g) = 0.011 W/kg (SAR corrected for target medium)
Smallest distance from peaks to all points 3 dB below = 17.3 mm
Ratio of SAR at M2 to SAR at M1 = 62.8%
Maximum value of SAR (measured) = 0.105 W/kg

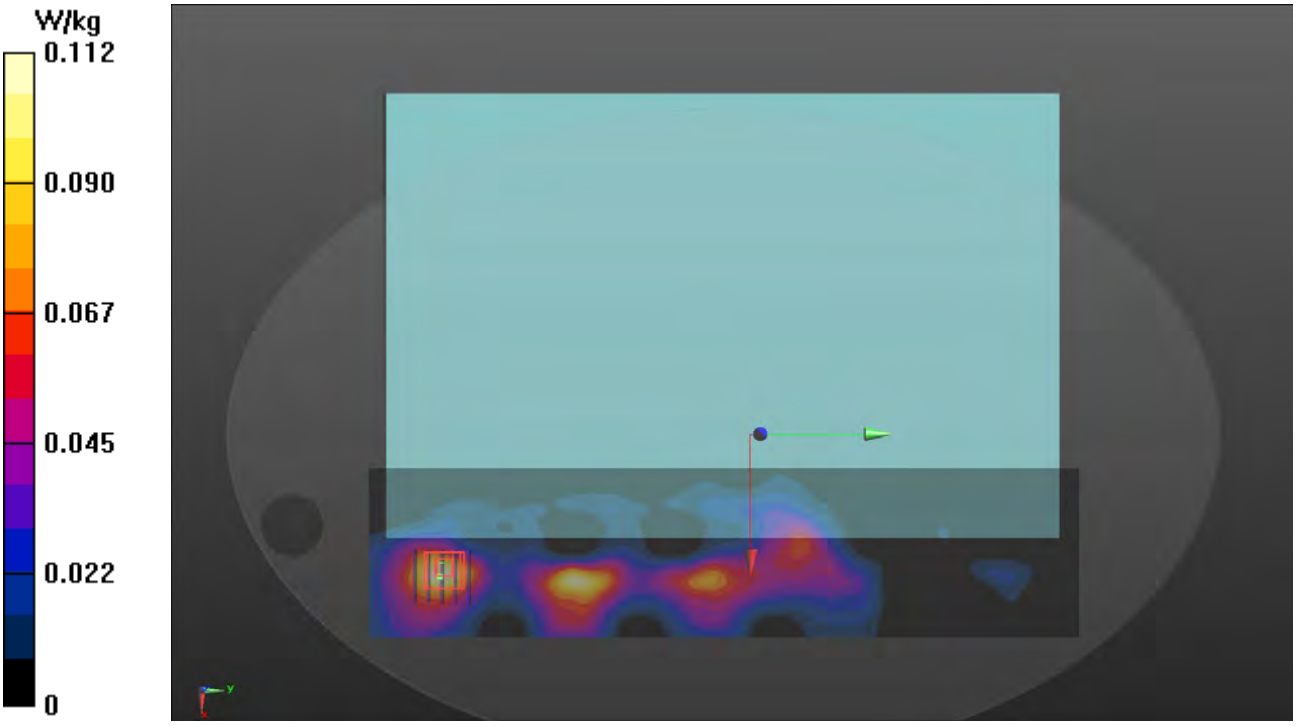

Test Laboratory: Bureau Veritas ADT SAR/HAC Testing Lab Date: 2023/01/09

P20 WLAN2.4G_802.11b_Bottom of Laptop_0mm_Ch1_Sample1_Ant 2

DUT: BERD-WTW-P22110656

Communication System: UID 10012 - CAB, IEEE 802.11b WiFi 2.4 GHz (DSSS, 1 Mbps); Frequency: 2412 MHz;Duty Cycle: 1:1.01
Medium: H06T27N3_0109 Medium parameters used: f = 2412 MHz; σ = 1.759 S/m; ε_r = 40.89; ρ = 1000 kg/m^3
Ambient Temperature：22.5 ℃ ；Liquid Temperature：20.9 ℃

DASY5 Configuration:
- Probe: EX3DV4 - SN7537; ConvF(7.61, 7.61, 7.61) @ 2412 MHz; Calibrated: 2022/04/27
- Sensor-Surface: 1.4mm (Mechanical Surface Detection)
- Electronics: DAE4 Sn1585; Calibrated: 2022/04/21
- Phantom: ELI Phantom_1245; Type: QDOVA002AA;
- Measurement SW: DASY52, Version 52.10 (4); SEMCAD X Version 14.6.14 (7483)

Area Scan (71x401x1): Interpolated grid: dx=1.200 mm, dy=1.200 mm
Maximum value of SAR (interpolated) = 0.262 W/kg

Zoom Scan (7x7x7)/Cube 0: Measurement grid: dx=5mm, dy=5mm, dz=5mm
Reference Value = 11.72 V/m; Power Drift = 0.02 dB
Peak SAR (extrapolated) = 0.339 W/kg
SAR(1 g) = 0.178 W/kg; SAR(10 g) = 0.090 W/kg (SAR corrected for target medium)
Smallest distance from peaks to all points 3 dB below = 10.6 mm
Ratio of SAR at M2 to SAR at M1 = 51.1%
Maximum value of SAR (measured) = 0.275 W/kg

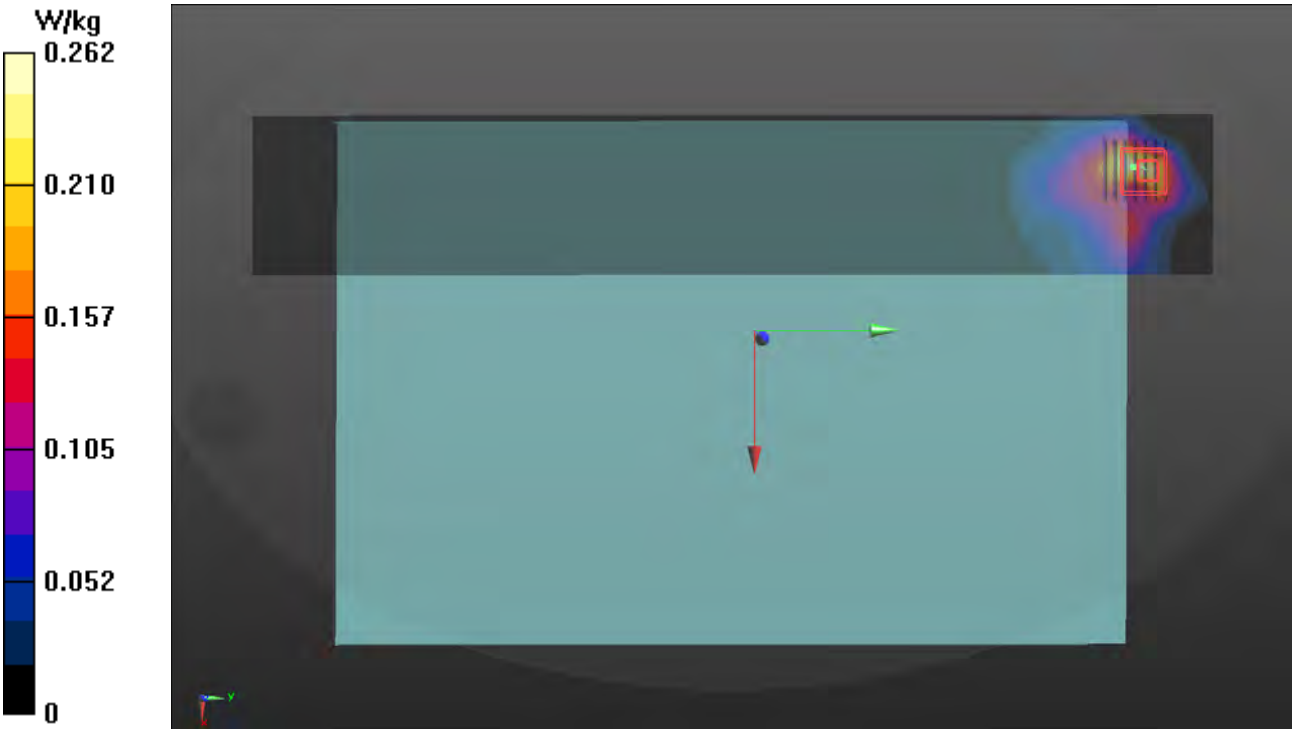

Test Laboratory: Bureau Veritas ADT SAR/HAC Testing Lab Date: 2023/01/10

P21 WLAN5.3G_802.11a_Bottom of Laptop_0mm_Ch52_Sample1_Ant 1

DUT: BERD-WTW-P22110656

Communication System: UID 10062 - CAD, IEEE 802.11a/h WiFi 5 GHz (OFDM, 6 Mbps); Frequency: 5260 MHz;Duty Cycle: 1:1.03
Medium: H51T72N3_0110 Medium parameters used: f = 5260 MHz; σ = 4.564 S/m; ε_r = 37.499; ρ = 1000 kg/m^3
Ambient Temperature：22.4 ℃ ；Liquid Temperature：20.8 ℃

DASY5 Configuration:
- Probe: EX3DV4 - SN7537; ConvF(5.54, 5.54, 5.54) @ 5260 MHz; Calibrated: 2022/04/27
- Sensor-Surface: 1.4mm (Mechanical Surface Detection)
- Electronics: DAE4 Sn1585; Calibrated: 2022/04/21
- Phantom: ELI Phantom_1245; Type: QDOVA002AA;
- Measurement SW: DASY52, Version 52.10 (4); SEMCAD X Version 14.6.14 (7483)

Area Scan (81x481x1): Interpolated grid: dx=1.000 mm, dy=1.000 mm
Maximum value of SAR (interpolated) = 0.154 W/kg

Zoom Scan (7x7x7)/Cube 0: Measurement grid: dx=4mm, dy=4mm, dz=1.4mm
Reference Value = 5.034 V/m; Power Drift = 0.04 dB
Peak SAR (extrapolated) = 0.173 W/kg
SAR(1 g) = 0.057 W/kg; SAR(10 g) = 0.028 W/kg (SAR corrected for target medium)
Smallest distance from peaks to all points 3 dB below = 14.7 mm
Ratio of SAR at M2 to SAR at M1 = 68.5%
Maximum value of SAR (measured) = 0.113 W/kg

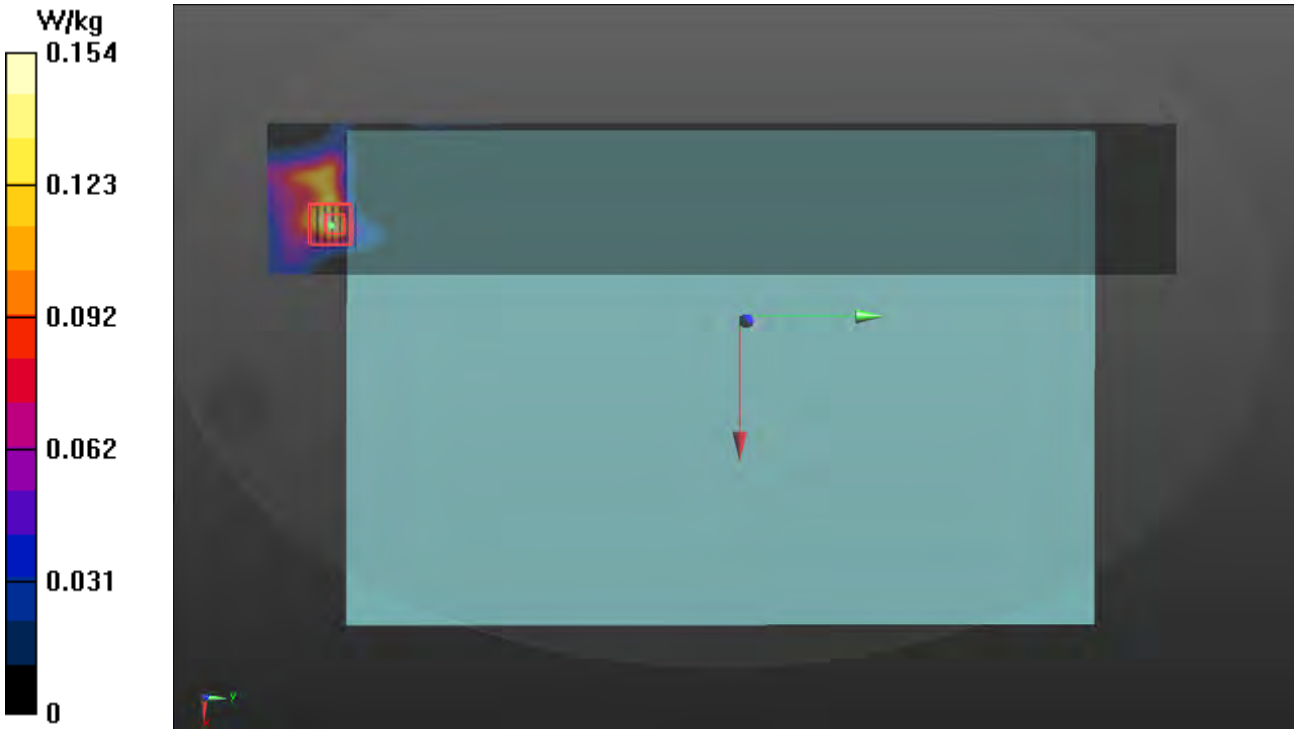

Test Laboratory: Bureau Veritas ADT SAR/HAC Testing Lab Date: 2023/01/10

P22 WLAN5.6G_802.11ac VHT80_Bottom of Laptop_0mm_Ch138_Sample1_Ant 1

DUT: BERD-WTW-P22110656

Communication System: UID 10544 - AAC, IEEE 802.11ac WiFi (80MHz, MCS0); Frequency: 5690 MHz;Duty Cycle: 1:1.03
Medium: H51T72N3_0110 Medium parameters used: f = 5690 MHz; σ = 5.047 S/m; ε_r = 36.782; ρ = 1000 kg/m^3
Ambient Temperature：22.4 ℃ ; Liquid Temperature：20.8 ℃

DASY5 Configuration:
- Probe: EX3DV4 - SN7537; ConvF(4.97, 4.97, 4.97) @ 5690 MHz; Calibrated: 2022/04/27
- Sensor-Surface: 1.4mm (Mechanical Surface Detection)
- Electronics: DAE4 Sn1585; Calibrated: 2022/04/21
- Phantom: ELI Phantom_1245; Type: QDOVA002AA;
- Measurement SW: DASY52, Version 52.10 (4); SEMCAD X Version 14.6.14 (7483)

Area Scan (81x481x1): Interpolated grid: dx=1.000 mm, dy=1.000 mm
Maximum value of SAR (interpolated) = 0.137 W/kg

Zoom Scan (7x7x7)/Cube 0: Measurement grid: dx=4mm, dy=4mm, dz=1.4mm
Reference Value = 4.173 V/m; Power Drift = 0.09 dB
Peak SAR (extrapolated) = 0.142 W/kg
SAR(1 g) = 0.039 W/kg; SAR(10 g) = 0.022 W/kg (SAR corrected for target medium)
Smallest distance from peaks to all points 3 dB below: Larger than measurement grid
Ratio of SAR at M2 to SAR at M1 = 63.4%
Maximum value of SAR (measured) = 0.0774 W/kg

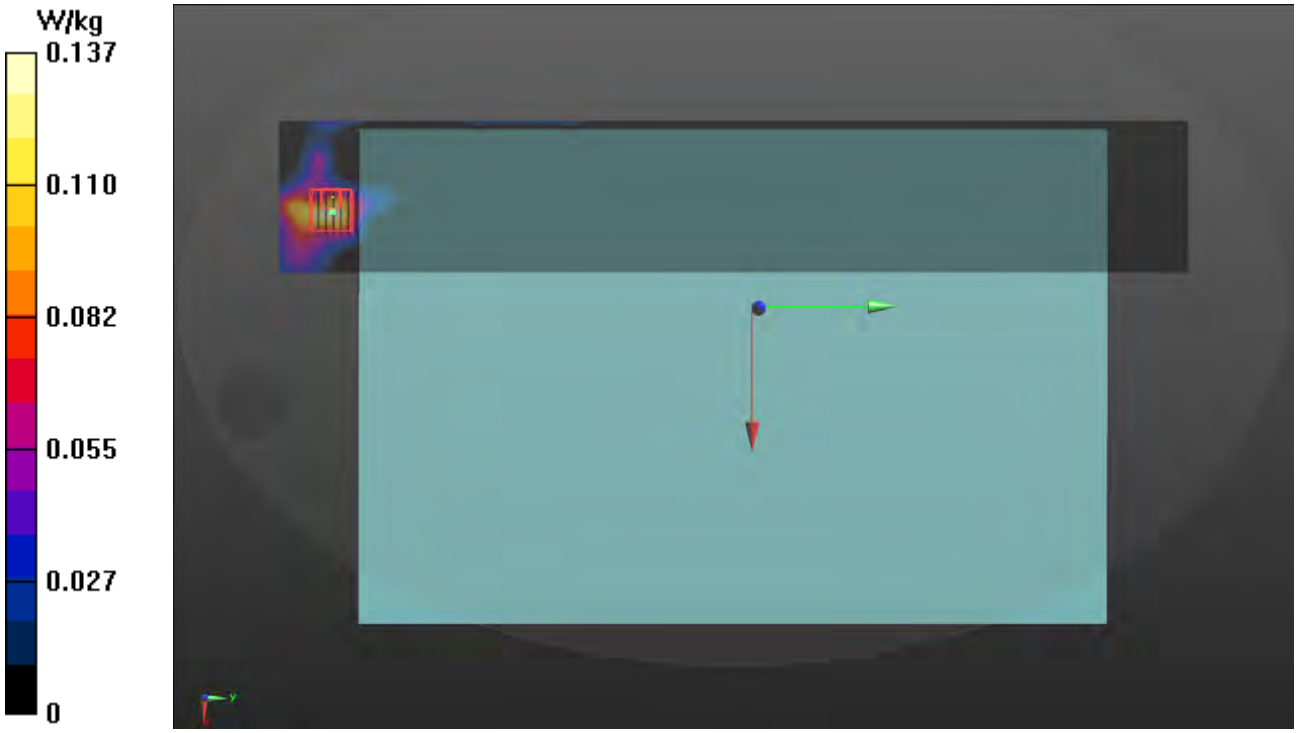

Test Laboratory: Bureau Veritas ADT SAR/HAC Testing Lab Date: 2023/01/10

P23 WLAN5.8G_802.11ac VHT80_Bottom of Laptop_0mm_Ch155_Sample1_Ant 1

DUT: BERD-WTW-P22110656

Communication System: UID 10544 - AAC, IEEE 802.11ac WiFi (80MHz, MCS0); Frequency: 5775 MHz;Duty Cycle: 1:1.03
Medium: H51T72N3_0110 Medium parameters used: f = 5775 MHz; σ = 5.145 S/m; ε_r = 36.64; ρ = 1000 kg/m^3
Ambient Temperature：22.4 ℃ ；Liquid Temperature：20.8 ℃

DASY5 Configuration:
- Probe: EX3DV4 - SN7537; ConvF(4.97, 4.97, 4.97) @ 5775 MHz; Calibrated: 2022/04/27
- Sensor-Surface: 1.4mm (Mechanical Surface Detection)
- Electronics: DAE4 Sn1585; Calibrated: 2022/04/21
- Phantom: ELI Phantom_1245; Type: QDOVA002AA;
- Measurement SW: DASY52, Version 52.10 (4); SEMCAD X Version 14.6.14 (7483)

Area Scan (81x481x1): Interpolated grid: dx=1.000 mm, dy=1.000 mm
Maximum value of SAR (interpolated) = 0.124 W/kg

Zoom Scan (7x7x7)/Cube 0: Measurement grid: dx=4mm, dy=4mm, dz=1.4mm
Reference Value = 3.758 V/m; Power Drift = -0.02 dB
Peak SAR (extrapolated) = 0.113 W/kg
SAR(1 g) = 0.030 W/kg; SAR(10 g) = 0.018 W/kg (SAR corrected for target medium)
Smallest distance from peaks to all points 3 dB below: Larger than measurement grid
Ratio of SAR at M2 to SAR at M1 = 61.6%
Maximum value of SAR (measured) = 0.0607 W/kg

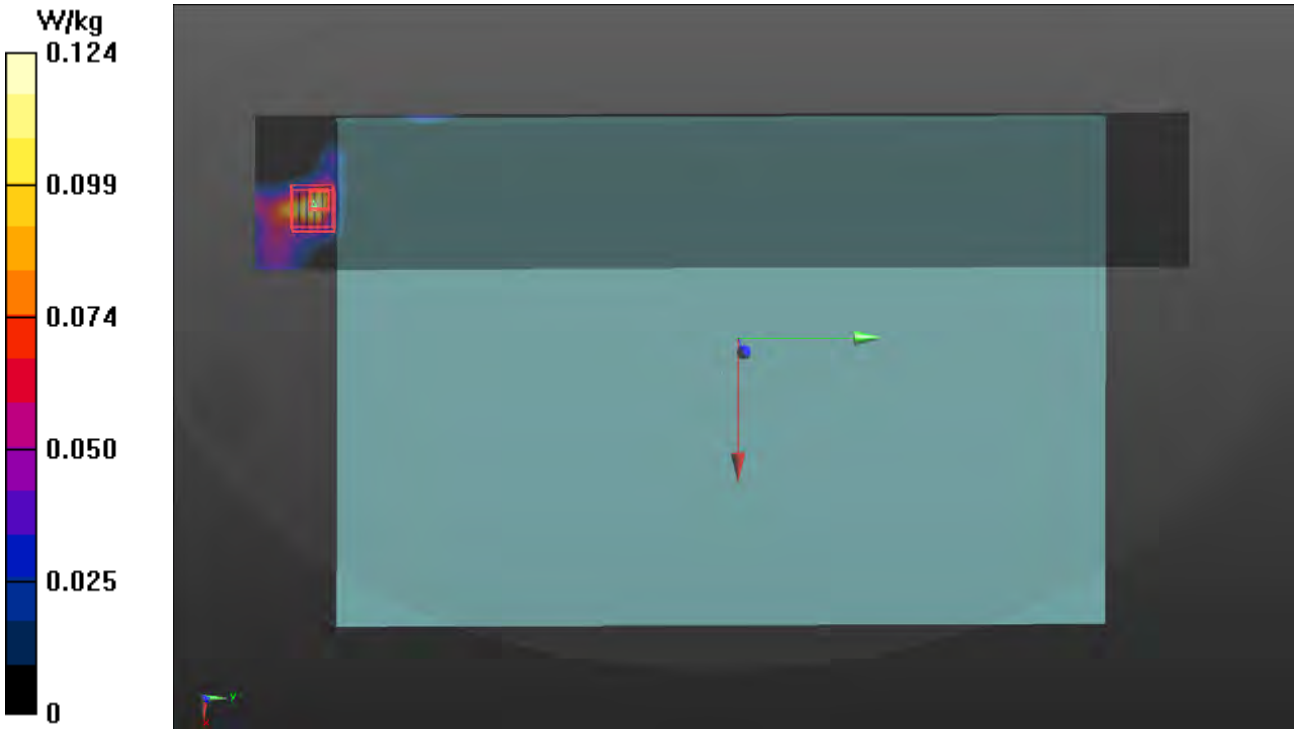

Measurement Report
P24 WLAN5.9G_802.11ac VHT160_Bottom of Laptop_0mm_Ch163_Sample 1_Ant 1
Device under Test Properties

Model, Manufacturer	Dimensions [mm]	IMEI	DUT Type
BERD-WTW-P22110656,	395.0 x 260.0 x 25.0		Laptop

Exposure Conditions

Phantom Section, TSL	Position, Test Distance [mm]	Band	Group, UID	Frequency [MHz], Channel Number	Conversion Factor	TSL Conductivity [S/m]	TSL Permittivity
Flat, HSL	Bottom of Laptop, 0.00	U-NII-4	WLAN, 10554-AAD	5815.0, 163	4.97	5.19	36.6

Hardware Setup

Phantom	TSL, Measured Date	Probe, Calibration Date	DAE, Calibration Date
ELI V5.0 (20deg probe tilt) - 1245	H51T72N3 , 2023-Jan-10	EX3DV4 - SN7537, 2022-04-27	DAE4 Sn1585, 2022-04-21

Scan Setup

	Area Scan	Zoom Scan
Grid Extents [mm]	80.0 x 440.0	24.0 x 24.0 x 22.0
Grid Steps [mm]	10.0 x 10.0	4.0 x 4.0 x 1.4
Sensor Surface [mm]	3.0	1.4

Measurement Results

	Area Scan	Zoom Scan
Date	2023-01-10	2023-01-10
psSAR1g [W/kg]	0.011	0.008
psSAR10g [W/kg]	0.005	0.005
Power Drift [dB]	0.01	-0.01
M2/M1 [%]		35.9
Dist 3dB Peak [mm]		4.4

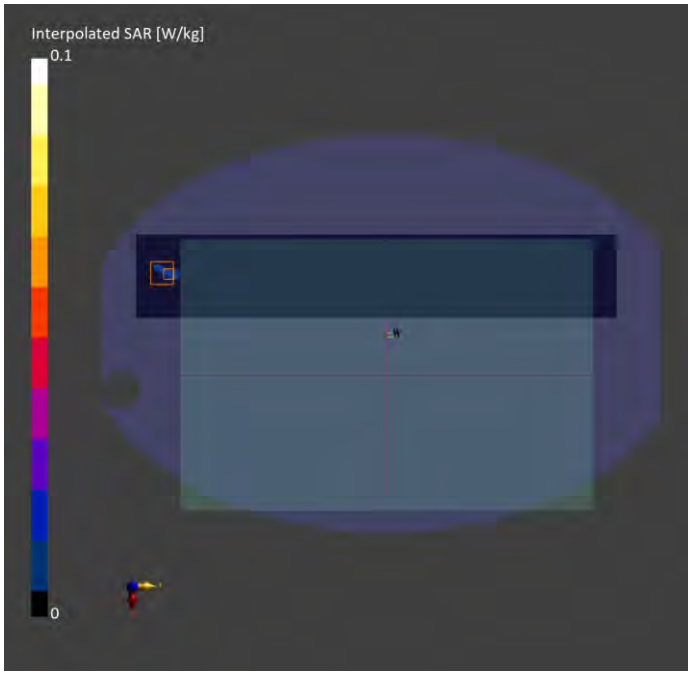

Test Laboratory: Bureau Veritas ADT SAR/HAC Testing Lab Date: 2023/01/09

P25 BT_BR_EDR_Bottom of Laptop_0mm_Ch39_Sample1_Ant 2

DUT: BERD-WTW-P22110656

Communication System: UID 10032 - CAA, IEEE 802.15.1 Bluetooth (GFSK, DH5); Frequency: 2441 MHz;Duty Cycle: 1:1.30
Medium: H06T27N3_0109 Medium parameters used: f = 2441 MHz; σ = 1.78 S/m; ε_r = 40.822; ρ = 1000 kg/m^3
Ambient Temperature：22.5 ℃ ; Liquid Temperature：20.9 ℃

DASY5 Configuration:
- Probe: EX3DV4 - SN7537; ConvF(7.61, 7.61, 7.61) @ 2441 MHz; Calibrated: 2022/04/27
- Sensor-Surface: 1.4mm (Mechanical Surface Detection)
- Electronics: DAE4 Sn1585; Calibrated: 2022/04/21
- Phantom: ELI Phantom_1245; Type: QDOVA002AA;
- Measurement SW: DASY52, Version 52.10 (4); SEMCAD X Version 14.6.14 (7483)

Area Scan (71x401x1): Interpolated grid: dx=1.200 mm, dy=1.200 mm
Maximum value of SAR (interpolated) = 0.0320 W/kg

Zoom Scan (7x7x7)/Cube 0: Measurement grid: dx=5mm, dy=5mm, dz=5mm
Reference Value = 4.068 V/m; Power Drift = 0.09 dB
Peak SAR (extrapolated) = 0.0420 W/kg
SAR(1 g) = 0.022 W/kg; SAR(10 g) = 0.012 W/kg (SAR corrected for target medium)
Smallest distance from peaks to all points 3 dB below: Larger than measurement grid
Ratio of SAR at M2 to SAR at M1 = 53.8%
Maximum value of SAR (measured) = 0.0345 W/kg

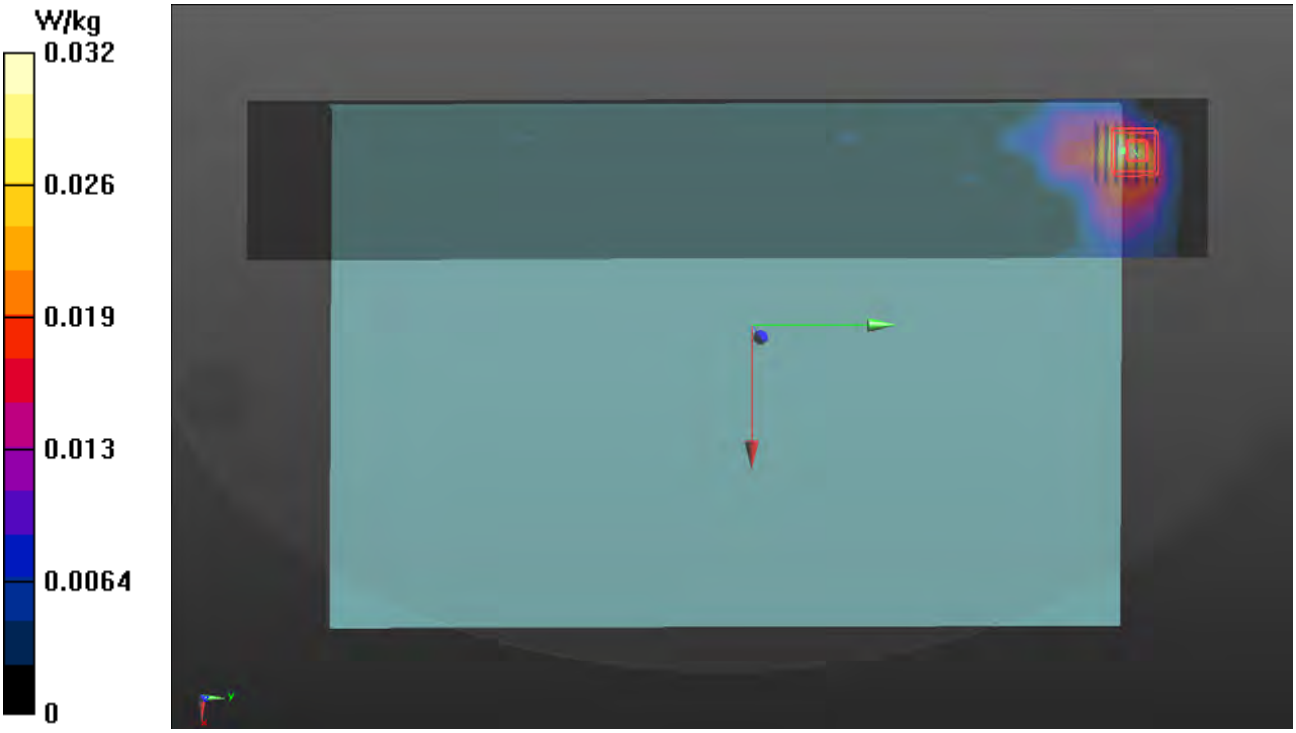

Measurement Report
P26 UNII-5_802.11ax HE160_Bottom of Laptop_0mm_Ch15_Sample 1_Ant 1
Device under Test Properties

Model, Manufacturer	Dimensions [mm]	IMEI	DUT Type
BERD-WTW-P22110656,	395.0 x 260.0 x 25.0		Laptop

Exposure Conditions

Phantom Section, TSL	Position, Test Distance [mm]	Band	Group, UID	Frequency [MHz], Channel Number	Conversion Factor	TSL Conductivity [S/m]	TSL Permittivity
Flat, HSL	Bottom of Laptop, 0.00	U-NII-5	WLAN, 10755-AAC	6025.0, 15	5.45	5.43	36.3

Hardware Setup

Phantom	TSL, Measured Date	Probe, Calibration Date	DAE, Calibration Date
ELI V5.0 (20deg probe tilt) - 1245	H51T72N3, 2023-Jan-10	EX3DV4 - SN7537, 2022-04-27	DAE4 Sn1585, 2022-04-21

Scan Setup

	Area Scan	Zoom Scan
Grid Extents [mm]	322.5 x 442.5	x x
Grid Steps [mm]	7.5 x 7.5	x x
Sensor Surface [mm]	3.0	

Measurement Results

	Area Scan	Zoom Scan
Date	2023-01-10	
psSAR1g [W/kg]	0	
psSAR10g [W/kg]	0	
psAPD (1.0cm2, sq) [W/m2]		
psAPD (4.0cm2, sq) [W/m2]		
Power Drift [dB]	0	
M2/M1 [%]		
Dist 3dB Peak [mm]		

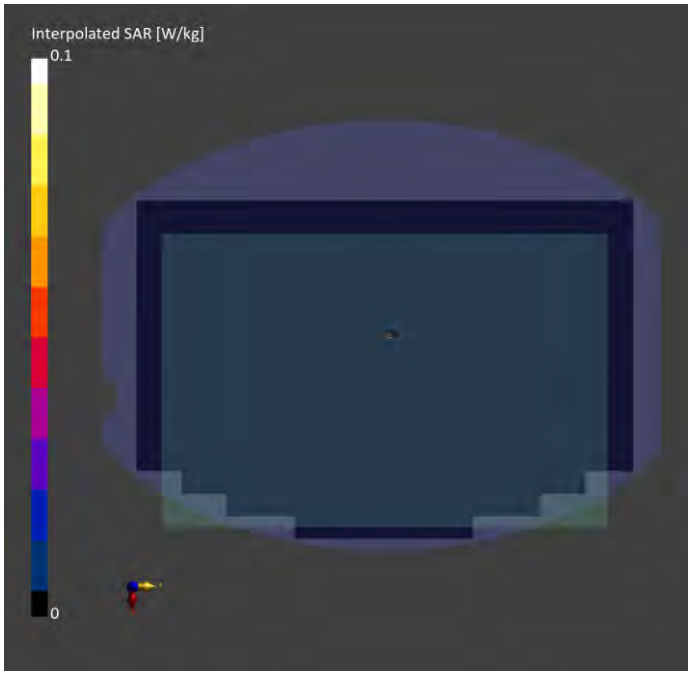

Measurement Report
P26 UNII-5_802.11ax HE160_Bottom of Laptop_0mm_Ch15_Sample 1_Ant 1
Device under Test Properties

Model, Manufacturer	Dimensions [mm]	IMEI	DUT Type
BERD-WTW-P22110656,	398.0 x 262.0 x 20.0		Laptop

Exposure Conditions

Phantom Section	Position, Test Distance [mm]	Band	Group, UID	Frequency [MHz], Channel Number	Conversion Factor
5G Air	Bottom of Laptop, 0.00	U-NII-5	WLAN, 10755-AAC	6025.0, 15	1.0

Hardware Setup

Phantom	Medium	Probe, Calibration Date	DAE, Calibration Date
mmWave- 1029	---Air	EUmmWV4 - SN9438_F1-55GHz, 2022-07-18	DAE4 Sn1341, 2022-07-19

Scan Setup

	5G Scan
Grid Extents [mm]	100.0 x 100.0
Grid Steps [lambda]	0.0502 x 0.0502
Sensor Surface [mm]	2.0

Measurement Results

	5G Scan
Date	2023-01-12
Avg. Area [cm^2]	4.00
psPDn+ [W/m^2]	0.136
psPDtot+ [W/m^2]	0.293
psPDmod+ [W/m^2]	0.690
E_{max} [V/m]	16.0
Power Drift [dB]	0.18

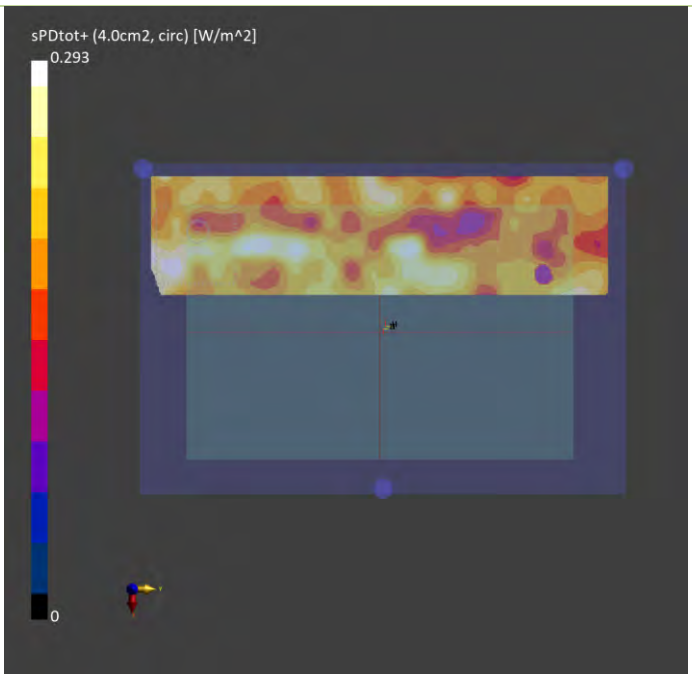

Appendix D. Maximum Target Conducted Power

The maximum conducted average power (Unit: dBm) including tune-up tolerance is shown as below.

Tune-up Power (Full)							
WLAN 2.4GHz							
Mode	Channel	Frequency	SISO Ant 1 Max Tune up	SISO Ant 2 Max Tune up	MIMO Ant 1 Tune up	MIMO Ant 2 Tune up	MIMO Ant 1+2 Max Tune up
802.11b	1	2412	21.0	21.0			
	6	2437	21.0	21.0			
	11	2462	21.0	21.0			
	12	2467	19.0	19.0			
	13	2472	16.0	16.0			
802.11g	1	2412	21.0	21.0			
	6	2437	21.0	21.0			
	11	2462	21.0	21.0			
	12	2467	19.0	19.0			
	13	2472	16.0	16.0			
802.11n HT20	1	2412	21.0	21.0	18.0	18.0	21.0
	6	2437	21.0	21.0	18.0	18.0	21.0
	11	2462	21.0	21.0	18.0	18.0	21.0
	12	2467	19.0	19.0	16.0	16.0	19.0
	13	2472	16.0	16.0	13.0	13.0	16.0
802.11n HT40	3	2422	21.0	21.0	18.0	18.0	21.0
	6	2437	21.0	21.0	18.0	18.0	21.0
	9	2452	21.0	21.0	18.0	18.0	21.0
	10	2457	19.0	19.0	16.0	16.0	19.0
	11	2462	16.0	16.0	13.0	13.0	16.0
802.11ax HE20	1	2412	21.0	21.0	18.0	18.0	21.0
	6	2437	21.0	21.0	18.0	18.0	21.0
	11	2462	21.0	21.0	18.0	18.0	21.0
	12	2467	19.0	19.0	16.0	16.0	19.0
	13	2472	16.0	16.0	13.0	13.0	16.0
802.11ax HE40	3	2422	21.0	21.0	18.0	18.0	21.0
	6	2437	21.0	21.0	18.0	18.0	21.0
	9	2452	21.0	21.0	18.0	18.0	21.0
	10	2457	19.0	19.0	16.0	16.0	19.0
	11	2462	16.0	16.0	13.0	13.0	16.0

Tune-up Power (Full)					
Bluetooth					
Mode	Channel	Frequency	Ant 1 Max Tune-up	Ant 2 Max Tune-up	
BR / EDR	0	2402		10.5	
	39	2441		10.5	
	78	2480		10.5	
LE	0	2402		9.0	
	19	2440		9.0	
	39	2480		9.0	

Tune-up Power (Full)							
WLAN 5.2GHz							
Mode	Channel	Frequency	SISO Ant 1 Max Tune up	SISO Ant 2 Max Tune up	MIMO Ant 1 Tune up	MIMO Ant 2 Tune up	MIMO Ant 1+2 Max Tune up
802.11a	36	5180	21.0	21.0			
	40	5200	21.0	21.0			
	44	5220	21.0	21.0			
	48	5240	21.0	21.0			
802.11n HT20	36	5180	21.0	21.0	18.0	18.0	21.0
	40	5200	21.0	21.0	18.0	18.0	21.0
	44	5220	21.0	21.0	18.0	18.0	21.0
	48	5240	21.0	21.0	18.0	18.0	21.0
802.11n HT40	38	5190	20.5	21.0	17.5	17.5	20.5
	46	5230	20.5	21.0	17.5	17.5	20.5
802.11ac VHT80	42	5210	18.75	19.0	15.8	15.8	18.75
802.11ax HE20	36	5180	21.0	21.0	18.0	18.0	21.0
	40	5200	21.0	21.0	18.0	18.0	21.0
	44	5220	21.0	21.0	18.0	18.0	21.0
	48	5240	21.0	21.0	18.0	18.0	21.0
802.11ax HE40	38	5190	20.5	21.0	17.5	17.5	20.5
	46	5230	20.5	21.0	17.5	17.5	20.5
802.11ax HE80	42	5210	18.75	19.0	15.8	15.8	18.75

Tune-up Power (Full)							
WLAN 5.3GHz							
Mode	Channel	Frequency	SISO Ant 1 Max Tune up	SISO Ant 2 Max Tune up	MIMO Ant 1 Tune up	MIMO Ant 2 Tune up	MIMO Ant 1+2 Max Tune up
802.11a	52	5260	21.0	21.0			
	56	5280	21.0	21.0			
	60	5300	21.0	21.0			
	64	5320	21.0	21.0			
802.11n HT20	52	5260	21.0	21.0	18.0	18.0	21.0
	56	5280	21.0	21.0	18.0	18.0	21.0
	60	5300	21.0	21.0	18.0	18.0	21.0
	64	5320	21.0	21.0	18.0	18.0	21.0
802.11n HT40	54	5270	20.5	21.0	17.5	17.5	20.5
	62	5310	20.5	21.0	17.5	17.5	20.5
802.11ac VHT80	58	5290	17.75	18.5	14.8	14.8	17.75
802.11ac VHT160	50	5250	15.25	16.0	12.3	12.3	15.25
802.11ax HE20	52	5260	21.0	21.0	18.0	18.0	21.0
	56	5280	21.0	21.0	18.0	18.0	21.0
	60	5300	21.0	21.0	18.0	18.0	21.0
	64	5320	21.0	21.0	18.0	18.0	21.0
802.11ax HE40	54	5270	20.5	21.0	17.5	17.5	20.5
	62	5310	20.5	21.0	17.5	17.5	20.5
802.11ax HE80	58	5290	17.75	18.5	14.8	14.8	17.75
802.11ax HE160	50	5250	15.25	16.0	12.3	12.3	15.25

Tune-up Power (Full)							
WLAN 5.6GHz							
Mode	Channel	Frequency	SISO Ant 1 Max Tune up	SISO Ant 2 Max Tune up	MIMO Ant 1 Tune up	MIMO Ant 2 Tune up	MIMO Ant 1+2 Max Tune up
802.11a	100	5500	21.0	21.0			
	116	5580	21.0	21.0			
	120	5600	21.0	21.0			
	124	5620	21.0	21.0			
	132	5660	21.0	21.0			
	140	5700	21.0	21.0			
	144	5720	21.0	21.0			
802.11n HT20	100	5500	21.0	21.0	18.0	18.0	21.0
	116	5580	21.0	21.0	18.0	18.0	21.0
	120	5600	21.0	21.0	18.0	18.0	21.0
	124	5620	21.0	21.0	18.0	18.0	21.0
	132	5660	21.0	21.0	18.0	18.0	21.0
	140	5700	21.0	21.0	18.0	18.0	21.0
	144	5720	21.0	21.0	18.0	18.0	21.0
802.11n HT40	102	5510	20.5	21.0	17.5	17.5	20.5
	110	5550	20.5	21.0	17.5	17.5	20.5
	118	5590	20.5	21.0	17.5	17.5	20.5
	126	5630	20.5	21.0	17.5	17.5	20.5
	134	5670	20.5	21.0	17.5	17.5	20.5
	142	5710	20.5	21.0	17.5	17.5	20.5
802.11ac VHT80	106	5530	21.0	21.0	18.0	18.0	21.0
	122	5610	21.0	21.0	18.0	18.0	21.0
	138	5690	21.0	21.0	18.0	18.0	21.0
802.11ac VHT160	114	5570	15.5	16.25	12.5	12.5	15.5
802.11ax HE20	100	5500	21.0	21.0	18.0	18.0	21.0
	116	5580	21.0	21.0	18.0	18.0	21.0
	120	5600	21.0	21.0	18.0	18.0	21.0
	124	5620	21.0	21.0	18.0	18.0	21.0
	132	5660	21.0	21.0	18.0	18.0	21.0
	140	5700	21.0	21.0	18.0	18.0	21.0
	144	5720	21.0	21.0	18.0	18.0	21.0
802.11ax HE40	102	5510	20.5	21.0	17.5	17.5	20.5
	110	5550	20.5	21.0	17.5	17.5	20.5
	118	5590	20.5	21.0	17.5	17.5	20.5
	126	5630	20.5	21.0	17.5	17.5	20.5
	134	5670	20.5	21.0	17.5	17.5	20.5
	142	5710	20.5	21.0	17.5	17.5	20.5
802.11ax HE80	106	5530	21.0	21.0	18.0	18.0	21.0
	122	5610	21.0	21.0	18.0	18.0	21.0
	138	5690	21.0	21.0	18.0	18.0	21.0
802.11ax HE160	114	5570	15.5	16.3	12.5	12.5	15.5

Tune-up Power (Full)							
WLAN 5.8GHz							
Mode	Channel	Frequency	SISO Ant 1 Max Tune up	SISO Ant 2 Max Tune up	MIMO Ant 1 Tune up	MIMO Ant 2 Tune up	MIMO Ant 1+2 Max Tune up
802.11a	149	5745	21.0	21.0			
	153	5765	21.0	21.0			
	157	5785	21.0	21.0			
	161	5805	21.0	21.0			
	165	5825	21.0	21.0			
802.11n HT20	149	5745	21.0	21.0	18.0	18.0	21.0
	153	5765	21.0	21.0	18.0	18.0	21.0
	157	5785	21.0	21.0	18.0	18.0	21.0
	161	5805	21.0	21.0	18.0	18.0	21.0
	165	5825	21.0	21.0	18.0	18.0	21.0
802.11n HT40	151	5755	21.0	21.0	18.0	18.0	21.0
	159	5795	21.0	21.0	18.0	18.0	21.0
802.11ac VHT80	155	5775	21.0	21.0	18.0	18.0	21.0
802.11ax HE20	149	5745	21.0	21.0	18.0	18.0	21.0
	153	5765	21.0	21.0	18.0	18.0	21.0
	157	5785	21.0	21.0	18.0	18.0	21.0
	161	5805	21.0	21.0	18.0	18.0	21.0
	165	5825	21.0	21.0	18.0	18.0	21.0
802.11ax HE40	151	5755	21.0	21.0	18.0	18.0	21.0
	159	5795	21.0	21.0	18.0	18.0	21.0
802.11ax HE80	155	5775	21.0	21.0	18.0	18.0	21.0

Tune-up Power (Full)							
WLAN 5.9GHz							
Mode	Channel	Frequency	SISO Max Tune up	SISO Max Tune up	MIMO Tune up	MIMO Tune up	MIMO Max Tune up
802.11a	169	5845	13.5	13.5			
	173	5865	13.5	13.5			
	177	5885	13.5	13.5			
802.11n HT20	169	5845	13.5	13.5	10.5	10.5	13.5
	173	5865	13.5	13.5	10.5	10.5	13.5
	177	5885	13.5	13.5	10.5	10.5	13.5
802.11n HT40	167	5835	13.5	13.5	10.5	10.5	13.5
	175	5875	13.5	13.5	10.5	10.5	13.5
802.11ac VHT80	171	5855	13.5	13.5	10.5	10.5	13.5
802.11ac VHT160	163	5815	13.5	13.5	10.5	10.5	13.5
802.11ax HE20	169	5845	13.5	13.5	10.5	10.5	13.5
	173	5865	13.5	13.5	10.5	10.5	13.5
	177	5885	13.5	13.5	10.5	10.5	13.5
802.11ax HE40	167	5835	13.5	13.5	10.5	10.5	13.5
	175	5875	13.5	13.5	10.5	10.5	13.5
802.11ax HE80	171	5855	13.5	13.5	10.5	10.5	13.5
802.11ax HE160	163	5815	13.5	13.5	10.5	10.5	13.5

Tune-up Power (Full)							
UNII-5							
Mode	Channel	Frequency	SISO Ant 1 Max Tune up	SISO Ant 2 Max Tune up	MIMO Ant 1 Tune up	MIMO Ant 2 Tune up	MIMO Ant 1+2 Max Tune up
802.11ax HE20	1	5955	7.0	7.0	4.0	4.0	7.0
	5	5975	7.0	7.0	4.0	4.0	7.0
	9	5995	7.0	7.0	4.0	4.0	7.0
	13	6015	7.0	7.0	4.0	4.0	7.0
	17	6035	7.0	7.0	4.0	4.0	7.0
	21	6055	7.0	7.0	4.0	4.0	7.0
	25	6075	7.0	7.0	4.0	4.0	7.0
	29	6095	7.0	7.0	4.0	4.0	7.0
	33	6115	7.0	7.0	4.0	4.0	7.0
	37	6135	7.0	7.0	4.0	4.0	7.0
	41	6155	7.0	7.0	4.0	4.0	7.0
	45	6175	7.0	7.0	4.0	4.0	7.0
	49	6195	7.0	7.0	4.0	4.0	7.0
	53	6215	7.0	7.0	4.0	4.0	7.0
	57	6235	7.0	7.0	4.0	4.0	7.0
	61	6255	7.0	7.0	4.0	4.0	7.0
	65	6275	7.0	7.0	4.0	4.0	7.0
	69	6295	7.0	7.0	4.0	4.0	7.0
	73	6315	7.0	7.0	4.0	4.0	7.0
	77	6335	7.0	7.0	4.0	4.0	7.0
	81	6355	7.0	7.0	4.0	4.0	7.0
	85	6375	7.0	7.0	4.0	4.0	7.0
	89	6395	7.0	7.0	4.0	4.0	7.0
	93	6415	7.0	7.0	4.0	4.0	7.0
802.11ax HE40	3	5965	10.0	10.0	7.0	7.0	10.0
	11	6005	10.0	10.0	7.0	7.0	10.0
	19	6045	10.0	10.0	7.0	7.0	10.0
	27	6085	10.0	10.0	7.0	7.0	10.0
	35	6125	10.0	10.0	7.0	7.0	10.0
	43	6165	10.0	10.0	7.0	7.0	10.0
	51	6205	10.0	10.0	7.0	7.0	10.0
	59	6245	10.0	10.0	7.0	7.0	10.0
	67	6285	10.0	10.0	7.0	7.0	10.0
	75	6325	10.0	10.0	7.0	7.0	10.0
	83	6365	10.0	10.0	7.0	7.0	10.0
	91	6405	10.0	10.0	7.0	7.0	10.0
802.11ax HE80	7	5985	13.0	13.0	10.0	10.0	13.0
	23	6065	13.0	13.0	10.0	10.0	13.0
	39	6145	13.0	13.0	10.0	10.0	13.0
	55	6225	13.0	13.0	10.0	10.0	13.0
	71	6305	13.0	13.0	10.0	10.0	13.0
	87	6385	13.0	13.0	10.0	10.0	13.0
802.11ax HE160	15	6025	13.5	13.5	10.5	10.5	13.5
	47	6185	13.5	13.5	10.5	10.5	13.5
	79	6345	13.5	13.5	10.5	10.5	13.5

Tune-up Power (Full)							
UNII-6							
Mode	Channel	Frequency	SISO Ant 1 Max Tune up	SISO Ant 2 Max Tune up	MIMO Ant 1 Tune up	MIMO Ant 2 Tune up	MIMO Ant 1+2 Max Tune up
802.11ax HE20	97	6435	7.0	7.0	4.0	4.0	7.0
	101	6455	7.0	7.0	4.0	4.0	7.0
	105	6475	7.0	7.0	4.0	4.0	7.0
	109	6495	7.0	7.0	4.0	4.0	7.0
	113	6515	7.0	7.0	4.0	4.0	7.0
	117	6535	7.0	7.0	4.0	4.0	7.0
802.11ax HE40	99	6445	10.0	10.0	7.0	7.0	10.0
	107	6485	10.0	10.0	7.0	7.0	10.0
	115	6525	10.0	10.0	7.0	7.0	10.0
802.11ax HE80	103	6465	13.0	13.0	10.0	10.0	13.0
	119	6545	13.0	13.0	10.0	10.0	13.0
802.11ax HE160	111	6505	13.5	13.5	10.5	10.5	13.5

Tune-up Power (Full)							
UNII-7							
Mode	Channel	Frequency	SISO Ant 1 Max Tune up	SISO Ant 2 Max Tune up	MIMO Ant 1 Tune up	MIMO Ant 2 Tune up	MIMO Ant 1+2 Max Tune up
802.11ax HE20	121	6555	7.0	7.0	4.0	4.0	7.0
	125	6575	7.0	7.0	4.0	4.0	7.0
	129	6595	7.0	7.0	4.0	4.0	7.0
	133	6615	7.0	7.0	4.0	4.0	7.0
	137	6635	7.0	7.0	4.0	4.0	7.0
	141	6655	7.0	7.0	4.0	4.0	7.0
	145	6675	7.0	7.0	4.0	4.0	7.0
	149	6695	7.0	7.0	4.0	4.0	7.0
	153	6715	7.0	7.0	4.0	4.0	7.0
	157	6735	7.0	7.0	4.0	4.0	7.0
	161	6755	7.0	7.0	4.0	4.0	7.0
	165	6775	7.0	7.0	4.0	4.0	7.0
	169	6795	7.0	7.0	4.0	4.0	7.0
	173	6815	7.0	7.0	4.0	4.0	7.0
	177	6835	7.0	7.0	4.0	4.0	7.0
	181	6855	7.0	7.0	4.0	4.0	7.0
	185	6875	7.0	7.0	4.0	4.0	7.0
802.11ax HE40	123	6565	10.0	10.0	7.0	7.0	10.0
	131	6605	10.0	10.0	7.0	7.0	10.0
	139	6645	10.0	10.0	7.0	7.0	10.0
	147	6685	10.0	10.0	7.0	7.0	10.0
	155	6725	10.0	10.0	7.0	7.0	10.0
	163	6765	10.0	10.0	7.0	7.0	10.0
	171	6805	10.0	10.0	7.0	7.0	10.0
	179	6845	10.0	10.0	7.0	7.0	10.0
	187	6885	10.0	10.0	7.0	7.0	10.0
802.11ax HE80	135	6625	13.0	13.0	10.0	10.0	13.0
	151	6705	13.0	13.0	10.0	10.0	13.0
	167	6785	13.0	13.0	10.0	10.0	13.0
	183	6865	13.0	13.0	10.0	10.0	13.0
802.11ax HE160	143	6665	13.5	13.5	10.5	10.5	13.5
	175	6825	13.5	13.5	10.5	10.5	13.5

Tune-up Power (Full)							
UNII-8							
Mode	Channel	Frequency	SISO Ant 1 Max Tune up	SISO Ant 2 Max Tune up	MIMO Ant 1 Tune up	MIMO Ant 2 Tune up	MIMO Ant 1+2 Max Tune up
802.11ax HE20	189	6895	7.0	7.0	4.0	4.0	7.0
	193	6915	7.0	7.0	4.0	4.0	7.0
	197	6935	7.0	7.0	4.0	4.0	7.0
	201	6955	7.0	7.0	4.0	4.0	7.0
	205	6975	7.0	7.0	4.0	4.0	7.0
	209	6995	7.0	7.0	4.0	4.0	7.0
	213	7015	7.0	7.0	4.0	4.0	7.0
	217	7035	7.0	7.0	4.0	4.0	7.0
	221	7055	7.0	7.0	4.0	4.0	7.0
	225	7075	7.0	7.0	4.0	4.0	7.0
	229	7095	7.0	7.0	4.0	4.0	7.0
	233	7115	7.0	7.0	4.0	4.0	7.0
802.11ax HE40	195	6925	10.0	10.0	7.0	7.0	10.0
	203	6965	10.0	10.0	7.0	7.0	10.0
	211	7005	10.0	10.0	7.0	7.0	10.0
	219	7045	10.0	10.0	7.0	7.0	10.0
	227	7085	10.0	10.0	7.0	7.0	10.0
802.11ax HE80	199	6945	13.0	13.0	10.0	10.0	13.0
	215	7025	13.0	13.0	10.0	10.0	13.0
802.11ax HE160	207	6985	13.5	13.5	10.5	10.5	13.5

Appendix E. Measured Conducted Power Result

The measuring conducted power (Unit: dBm) are shown as below.

Conducted Power (Full)			
WLAN2.4GHz Ant 1			
Mode	Channel	Frequency	SISO Ant 1 Avg. Power
802.11b	1	2412	20.98
	6	2437	20.91
	11	2462	20.92
	12	2467	18.91
	13	2472	15.96
802.11g	1	2412	20.6
	6	2437	20.55
	11	2462	20.64
	12	2467	18.62
	13	2472	15.63
802.11n HT20	1	2412	20.58
	6	2437	20.65
	11	2462	20.56
	12	2467	18.66
	13	2472	15.57
802.11n HT40	3	2422	20.67
	6	2437	20.64
	9	2452	20.56
	10	2457	18.68
	11	2462	15.53
802.11ax HE20	1	2412	20.58
	6	2437	20.58
	11	2462	20.56
	12	2467	18.61
	13	2472	15.52
802.11ax HE40	3	2422	20.65
	6	2437	20.5
	9	2452	20.58
	10	2457	18.68
	11	2462	15.53

Conducted Power (Full)			
WLAN2.4GHz Ant 2			
Mode	Channel	Frequency	SISO Ant 2 Avg. Power
802.11b	1	2412	20.99
	6	2437	20.91
	11	2462	20.95
	12	2467	18.94
	13	2472	15.98
802.11g	1	2412	20.5
	6	2437	20.54
	11	2462	20.59
	12	2467	18.62
	13	2472	15.64
802.11n HT20	1	2412	20.5
	6	2437	20.57
	11	2462	20.55
	12	2467	18.69
	13	2472	15.59
802.11n HT40	3	2422	20.61
	6	2437	20.52
	9	2452	20.7
	10	2457	18.51
	11	2462	15.59
802.11ax HE20	1	2412	20.65
	6	2437	20.57
	11	2462	20.69
	12	2467	18.67
	13	2472	15.69
802.11ax HE40	3	2422	20.58
	6	2437	20.61
	9	2452	20.5
	10	2457	18.58
	11	2462	15.56

Conducted Power (Full)					
WLAN2.4GHz Ant 1+2					
Mode	Channel	Frequency	MIMO Ant 1 Avg. Power	MIMO Ant 2 Avg. Power	MIMO Ant 1+2 Avg. Power
802.11b	1	2412			
	6	2437			
	11	2462			
	12	2467			
	13	2472			
802.11g	1	2412			
	6	2437			
	11	2462			
	12	2467			
	13	2472			
802.11n HT20	1	2412	17.66	17.53	20.61
	6	2437	17.68	17.65	20.68
	11	2462	17.58	17.67	20.64
	12	2467	15.54	15.52	18.54
	13	2472	12.56	12.58	15.58
802.11n HT40	3	2422	17.64	17.45	20.56
	6	2437	17.95	17.96	20.97
	9	2452	16.83	16.64	19.75
	10	2457	15.97	15.94	18.97
	11	2462	12.96	12.92	15.95
802.11ax HE20	1	2412	17.61	17.53	20.58
	6	2437	17.63	17.55	20.60
	11	2462	17.6	17.67	20.65
	12	2467	15.52	15.55	18.55
	13	2472	12.52	12.53	15.54
802.11ax HE40	3	2422	17.59	17.68	20.65
	6	2437	17.57	17.52	20.56
	9	2452	17.56	17.63	20.61
	10	2457	15.5	15.56	18.54
	11	2462	12.63	12.67	15.66

Conducted Power (Full)			
Bluetooth Ant 2			
Mode	Channel	Frequency	SISO Ant 2 Avg. Power
BR / EDR	0	2402	9.52
	39	2441	9.72
	78	2480	9.91
LE	0	2402	8.6
	19	2440	8.56
	39	2480	8.69

Conducted Power (Full)			
WLAN 5.2GHz Ant 1			
Mode	Channel	Frequency	SISO Ant 1 Avg. Power
802.11a	36	5180	20.01
	40	5200	20.96
	44	5220	20.95
	48	5240	20.94
802.11n HT20	36	5180	20.66
	40	5200	20.67
	44	5220	20.59
	48	5240	20.51
802.11n HT40	38	5190	20.14
	46	5230	20.15
802.11ac VHT80	42	5210	18.31
802.11ax HE20	36	5180	20.59
	40	5200	20.63
	44	5220	20.52
	48	5240	20.51
802.11ax HE40	38	5190	20.1
	46	5230	20.02
802.11ax HE80	42	5210	18.39

Conducted Power (Full)			
WLAN 5.2GHz Ant 2			
Mode	Channel	Frequency	SISO Ant 2 Avg. Power
802.11a	36	5180	20.7
	40	5200	20.5
	44	5220	20.62
	48	5240	20.63
802.11n HT20	36	5180	20.65
	40	5200	20.62
	44	5220	20.67
	48	5240	20.68
802.11n HT40	38	5190	20.97
	46	5230	20.94
802.11ac VHT80	42	5210	18.62
802.11ax HE20	36	5180	20.69
	40	5200	20.52
	44	5220	20.56
	48	5240	20.68
802.11ax HE40	38	5190	20.55
	46	5230	20.58
802.11ax HE80	42	5210	18.52

Conducted Power (Full)					
WLAN 5.2GHz Ant 1+2					
Mode	Channel	Frequency	MIMO Ant 1 Avg. Power	MIMO Ant 2 Avg. Power	MIMO Ant 1+2 Avg. Power
802.11a	36	5180			
	40	5200			
	44	5220			
	48	5240			
802.11n HT20	36	5180	17.81	17.84	20.84
	40	5200	17.86	17.74	20.81
	44	5220	17.99	17.98	21
	48	5240	17.96	17.93	20.96
802.11n HT40	38	5190	17.17	17.2	20.2
	46	5230	17.16	17.04	20.11
802.11ac VHT80	42	5210	15.36	15.41	18.4
802.11ax HE20	36	5180	17.52	17.64	20.59
	40	5200	17.61	17.52	20.58
	44	5220	17.54	17.63	20.6
	48	5240	17.6	17.51	20.57
802.11ax HE40	38	5190	17.16	17.14	20.16
	46	5230	17.19	17	20.11
802.11ax HE80	42	5210	15.4	15.29	18.36

Conducted Power (Full)			
WLAN 5.3GHz Ant 1			
Mode	Channel	Frequency	SISO Ant 1 Avg. Power
802.11a	52	5260	20.94
	56	5280	20.96
	60	5300	20.98
	64	5320	20.71
802.11n HT20	52	5260	20.69
	56	5280	20.7
	60	5300	20.56
	64	5320	20.52
802.11n HT40	54	5270	20.17
	62	5310	20.16
802.11ac VHT80	58	5290	17.28
802.11ac VHT160	50	5250	14.82
802.11ax HE20	52	5260	20.57
	56	5280	20.62
	60	5300	20.62
	64	5320	20.61
802.11ax HE40	54	5270	20.08
	62	5310	20.01
802.11ax HE80	58	5290	17.44
802.11ax HE160	50	5250	14.94

Conducted Power (Full)			
WLAN 5.3GHz Ant 2			
Mode	Channel	Frequency	SISO Ant 2 Avg. Power
802.11a	52	5260	20.59
	56	5280	20.64
	60	5300	20.63
	64	5320	20.54
802.11n HT20	52	5260	20.65
	56	5280	20.6
	60	5300	20.54
	64	5320	20.54
802.11n HT40	54	5270	20.98
	62	5310	20.45
802.11ac VHT80	58	5290	18.06
802.11ac VHT160	50	5250	15.52
802.11ax HE20	52	5260	20.65
	56	5280	20.59
	60	5300	20.65
	64	5320	20.52
802.11ax HE40	54	5270	20.67
	62	5310	20.58
802.11ax HE80	58	5290	18.2
802.11ax HE160	50	5250	15.63

Conducted Power (Full)					
WLAN 5.3GHz Ant 1+2					
Mode	Channel	Frequency	MIMO Ant 1 Avg. Power	MIMO Ant 2 Avg. Power	MIMO Ant 1+2 Avg. Power
802.11a	52	5260			
	56	5280			
	60	5300			
	64	5320			
802.11n HT20	52	5260	17.96	17.99	20.99
	56	5280	17.91	17.96	20.95
	60	5300	17.94	17.89	20.93
	64	5320	17.92	17.95	20.95
802.11n HT40	54	5270	17.17	17.18	20.19
	62	5310	17.06	17.05	20.07
802.11ac VHT80	58	5290	14.34	14.35	17.36
802.11ac VHT160	50	5250	11.84	11.76	14.81
802.11ax HE20	52	5260	17.53	17.57	20.56
	56	5280	17.5	17.57	20.55
	60	5300	17.65	17.57	20.62
	64	5320	17.62	17.63	20.64
802.11ax HE40	54	5270	17.14	17.05	20.11
	62	5310	17.18	17.12	20.16
802.11ax HE80	58	5290	14.26	14.28	17.28
802.11ax HE160	50	5250	11.77	11.83	14.81

Conducted Power (Full)			
WLAN 5.6GHz Ant 1			
Mode	Channel	Frequency	SISO Ant 1 Avg. Power
802.11a	100	5500	20.62
	116	5580	20.67
	120	5600	20.67
	124	5620	20.61
	132	5660	20.66
	140	5700	20.57
	144	5720	20.61
802.11n HT20	100	5500	20.64
	116	5580	20.58
	120	5600	20.55
	124	5620	20.58
	132	5660	20.58
	140	5700	20.63
	144	5720	20.56
802.11n HT40	102	5510	20.09
	110	5550	20.09
	118	5590	20.13
	126	5630	20.09
	134	5670	20.01
	142	5710	20.2
802.11ac VHT80	106	5530	20.98
	122	5610	20.94
	138	5690	20.99
802.11ac VHT160	114	5570	15.12
802.11ax HE20	100	5500	20.53
	116	5580	20.56
	120	5600	20.52
	124	5620	20.56
	132	5660	20.51
	140	5700	20.5
	144	5720	20.62
802.11ax HE40	102	5510	20.16
	110	5550	20.05
	118	5590	20
	126	5630	20.14
	134	5670	20.11
	142	5710	20.08
802.11ax HE80	106	5530	20.63
	122	5610	20.55
	138	5690	20.67
802.11ax HE160	114	5570	15.03

Conducted Power (Full)			
WLAN 5.6GHz Ant 2			
Mode	Channel	Frequency	SISO Ant 2 Avg. Power
802.11a	100	5500	20.55
	116	5580	20.67
	120	5600	20.55
	124	5620	20.66
	132	5660	20.61
	140	5700	20.67
	144	5720	20.66
802.11n HT20	100	5500	20.5
	116	5580	20.68
	120	5600	20.61
	124	5620	20.7
	132	5660	20.6
	140	5700	20.52
	144	5720	20.68
802.11n HT40	102	5510	20.55
	110	5550	20.67
	118	5590	20.7
	126	5630	20.61
	134	5670	20.61
	142	5710	20.5
802.11ac VHT80	106	5530	20.94
	122	5610	20.93
	138	5690	20.96
802.11ac VHT160	114	5570	15.95
802.11ax HE20	100	5500	20.65
	116	5580	20.61
	120	5600	20.69
	124	5620	20.54
	132	5660	20.66
	140	5700	20.63
	144	5720	20.52
802.11ax HE40	102	5510	20.64
	110	5550	20.62
	118	5590	20.66
	126	5630	20.55
	134	5670	20.55
	142	5710	20.5
802.11ax HE80	106	5530	20.67
	122	5610	20.65
	138	5690	20.62
802.11ax HE160	114	5570	15.92

Conducted Power (Full)					
WLAN 5.6GHz Ant 1+2					
Mode	Channel	Frequency	MIMO Ant 1 Avg. Power	MIMO Ant 2 Avg. Power	MIMO Ant 1+2 Avg. Power
802.11a	100	5500			
	116	5580			
	120	5600			
	124	5620			
	132	5660			
	140	5700			
	144	5720			
802.11n HT20	100	5500	17.7	17.52	20.62
	116	5580	17.52	17.63	20.59
	120	5600	17.5	17.61	20.57
	124	5620	17.55	17.51	20.54
	132	5660	17.61	17.65	20.64
	140	5700	17.6	17.5	20.56
	144	5720	17.56	17.63	20.61
802.11n HT40	102	5510	17.15	17.08	20.13
	110	5550	17.04	17.07	20.07
	118	5590	17	17.13	20.08
	126	5630	17.15	17.12	20.15
	134	5670	17.07	17.02	20.06
	142	5710	17.01	17.1	20.07
802.11ac VHT80	106	5530	17.96	17.82	20.9
	122	5610	17.92	17.94	20.94
	138	5690	17.99	17.96	20.99
802.11ac VHT160	114	5570	12.1	12.12	15.12
802.11ax HE20	100	5500	17.5	17.62	20.57
	116	5580	17.68	17.69	20.7
	120	5600	17.51	17.55	20.54
	124	5620	17.64	17.66	20.66
	132	5660	17.59	17.58	20.6
	140	5700	17.66	17.62	20.65
	144	5720	17.52	17.6	20.57
802.11ax HE40	102	5510	17.14	17.08	20.12
	110	5550	17.16	17.01	20.1
	118	5590	17.16	17.19	20.19
	126	5630	17.13	17.12	20.14
	134	5670	17.04	17	20.03
	142	5710	17.16	17.17	20.18
802.11ax HE80	106	5530	17.56	17.66	20.62
	122	5610	17.62	17.65	20.65
	138	5690	17.5	17.51	20.52
802.11ax HE160	114	5570	12.19	12.11	15.16

Conducted Power (Full)			
WLAN 5.8GHz Ant 1			
Mode	Channel	Frequency	SISO Ant 1 Avg. Power
802.11a	149	5745	20.66
	153	5765	20.7
	157	5785	20.52
	161	5805	20.57
	165	5825	20.6
802.11n HT20	149	5745	20.61
	153	5765	20.54
	157	5785	20.57
	161	5805	20.68
	165	5825	20.69
802.11n HT40	151	5755	20.69
	159	5795	20.7
802.11ac VHT80	155	5775	20.94
802.11ax HE20	149	5745	20.59
	153	5765	20.67
	157	5785	20.62
	161	5805	20.69
	165	5825	20.58
802.11ax HE40	151	5755	20.62
	159	5795	20.67
802.11ax HE80	155	5775	20.69

Conducted Power (Full)			
WLAN 5.8GHz Ant 2			
Mode	Channel	Frequency	SISO Ant 2 Avg. Power
802.11a	149	5745	20.53
	153	5765	20.6
	157	5785	20.59
	161	5805	20.51
	165	5825	20.6
802.11n HT20	149	5745	20.55
	153	5765	20.6
	157	5785	20.6
	161	5805	20.68
	165	5825	20.68
802.11n HT40	151	5755	20.59
	159	5795	20.53
802.11ac VHT80	155	5775	20.96
802.11ax HE20	149	5745	20.57
	153	5765	20.68
	157	5785	20.57
	161	5805	20.67
	165	5825	20.69
802.11ax HE40	151	5755	20.56
	159	5795	20.65
802.11ax HE80	155	5775	20.5

Conducted Power (Full)					
WLAN 5.8GHz Ant 1+2					
Mode	Channel	Frequency	MIMO Ant 1 Avg. Power	MIMO Ant 2 Avg. Power	MIMO Ant 1+2 Avg. Power
802.11a	149	5745			
	153	5765			
	157	5785			
	161	5805			
	165	5825			
802.11n HT20	149	5745	17.5	17.58	20.55
	153	5765	17.51	17.51	20.52
	157	5785	17.51	17.57	20.55
	161	5805	17.59	17.55	20.58
	165	5825	17.54	17.59	20.58
802.11n HT40	151	5755	17.61	17.53	20.58
	159	5795	17.56	17.65	20.62
802.11ac VHT80	155	5775	17.97	17.94	20.97
802.11ax HE20	149	5745	17.59	17.64	20.63
	153	5765	17.7	17.55	20.64
	157	5785	17.7	17.65	20.69
	161	5805	17.63	17.5	20.58
	165	5825	17.68	17.59	20.65
802.11ax HE40	151	5755	17.54	17.52	20.54
	159	5795	17.52	17.62	20.58
802.11ax HE80	155	5775	17.64	17.7	20.68

Conducted Power (Full)			
WLAN 5.9GHz Ant 1			
Mode	Channel	Frequency	SISO Ant 1 Avg. Power
802.11a	169	5845	13.03
	173	5865	13.02
	177	5885	13.15
802.11n HT20	169	5845	13.2
	173	5865	13.08
	177	5885	13.08
802.11n HT40	167	5835	13.18
	175	5875	13.03
802.11ac VHT80	171	5855	13.17
802.11ac VHT160	163	5815	13.49
802.11ax HE20	169	5845	13
	173	5865	13.01
	177	5885	13.12
802.11ax HE40	167	5835	13.05
	175	5875	13
802.11ax HE80	171	5855	13.08
802.11ax HE160	163	5815	13.1

Conducted Power (Full)			
WLAN 5.9GHz Ant 2			
Mode	Channel	Frequency	SISO Ant 2 Avg. Power
802.11a	169	5845	13.13
	173	5865	13
	177	5885	13.13
802.11n HT20	169	5845	13.07
	173	5865	13.16
	177	5885	13.16
802.11n HT40	167	5835	13.04
	175	5875	13.1
802.11ac VHT80	171	5855	13.14
802.11ac VHT160	163	5815	13.48
802.11ax HE20	169	5845	13.18
	173	5865	13.06
	177	5885	13.11
802.11ax HE40	167	5835	13.11
	175	5875	13.12
802.11ax HE80	171	5855	13.15
802.11ax HE160	163	5815	13.15

Conducted Power (Full)					
WLAN 5.9GHz Ant 1+2					
Mode	Channel	Frequency	MIMO Ant 1 Avg. Power	MIMO Ant 2 Avg. Power	MIMO Ant 1+2 Avg. Power
802.11a	169	5845			
	173	5865			
	177	5885			
802.11n HT20	169	5845	10.16	10.03	13.11
	173	5865	10.01	10.14	13.09
	177	5885	10.03	10.18	13.12
802.11n HT40	167	5835	10	10.15	13.09
	175	5875	10.14	10.19	13.18
802.11ac VHT80	171	5855	10.01	10.04	**13.04**
802.11ac VHT160	163	5815	10.46	10.49	13.49
802.11ax HE20	169	5845	10.17	10.11	13.15
	173	5865	10.09	10.05	13.08
	177	5885	10.15	10.06	13.12
802.11ax HE40	167	5835	10.04	10.02	13.04
	175	5875	10.07	10.19	13.14
802.11ax HE80	171	5855	10	10.18	13.1
802.11ax HE160	163	5815	10.08	10.04	13.07

Conducted Power (Full)			
UNII-5 Ant 1			
Mode	Channel	Frequency	SISO Ant 1 Avg. Power
802.11ax HE20	1	5955	6.55
	5	5975	6.64
	9	5995	6.64
	13	6015	6.57
	17	6035	6.65
	21	6055	6.57
	25	6075	6.53
	29	6095	6.64
	33	6115	6.69
	37	6135	6.59
	41	6155	6.57
	45	6175	6.7
	49	6195	6.64
	53	6215	6.61
	57	6235	6.52
	61	6255	6.58
	65	6275	6.61
	69	6295	6.63
	73	6315	6.5
	77	6335	6.55
	81	6355	6.6
	85	6375	6.52
	89	6395	6.7
	93	6415	6.62
802.11ax HE40	3	5965	9.6
	11	6005	9.51
	19	6045	9.55
	27	6085	9.6
	35	6125	9.5
	43	6165	9.64
	51	6205	9.62
	59	6245	9.53
	67	6285	9.61
	75	6325	9.66
	83	6365	9.63
	91	6405	9.63
802.11ax HE80	7	5985	12.66
	23	6065	12.63
	39	6145	12.58
	55	6225	12.61
	71	6305	12.7
	87	6385	12.64
802.11ax HE160	15	6025	13.49
	47	6185	13.45
	79	6345	13.42

Conducted Power (Full)			
UNII-5 Ant 2			
Mode	Channel	Frequency	SISO Ant 2 Avg. Power
802.11ax HE20	1	5955	6.54
	5	5975	6.58
	9	5995	6.59
	13	6015	6.63
	17	6035	6.7
	21	6055	6.53
	25	6075	6.57
	29	6095	6.53
	33	6115	6.51
	37	6135	6.63
	41	6155	6.55
	45	6175	6.7
	49	6195	6.59
	53	6215	6.51
	57	6235	6.6
	61	6255	6.59
	65	6275	6.58
	69	6295	6.7
	73	6315	6.58
	77	6335	6.68
	81	6355	6.68
	85	6375	6.52
	89	6395	6.67
	93	6415	6.55
802.11ax HE40	3	5965	9.59
	11	6005	9.67
	19	6045	9.66
	27	6085	9.54
	35	6125	9.63
	43	6165	9.56
	51	6205	9.59
	59	6245	9.68
	67	6285	9.61
	75	6325	9.54
	83	6365	9.56
	91	6405	9.68
802.11ax HE80	7	5985	12.64
	23	6065	12.64
	39	6145	12.62
	55	6225	12.64
	71	6305	12.56
	87	6385	12.55
802.11ax HE160	15	6025	13.47
	47	6185	13.41
	79	6345	13.42

Conducted Power (Full)					
UNII-5 Ant 1+2					
Mode	Channel	Frequency	MIMO Ant 1 Avg. Power	MIMO Ant 2 Avg. Power	MIMO Ant 1+2 Avg. Power
802.11ax HE20	1	5955	3.59	3.53	6.57
	5	5975	3.69	3.57	6.64
	9	5995	3.53	3.51	6.53
	13	6015	3.55	3.57	6.57
	17	6035	3.6	3.7	6.66
	21	6055	3.52	3.61	6.58
	25	6075	3.54	3.59	6.58
	29	6095	3.69	3.58	6.65
	33	6115	3.52	3.62	6.58
	37	6135	3.66	3.53	6.61
	41	6155	3.69	3.52	6.62
	45	6175	3.63	3.64	6.65
	49	6195	3.65	3.57	6.62
	53	6215	3.55	3.56	6.57
	57	6235	3.53	3.63	6.59
	61	6255	3.58	3.51	6.56
	65	6275	3.52	3.58	6.56
	69	6295	3.58	3.62	6.61
	73	6315	3.5	3.54	6.53
	77	6335	3.56	3.52	6.55
	81	6355	3.69	3.62	6.67
	85	6375	3.52	3.55	6.55
	89	6395	3.5	3.67	6.6
	93	6415	3.58	3.7	6.65
802.11ax HE40	3	5965	6.51	6.61	9.57
	11	6005	6.66	6.69	9.69
	19	6045	6.65	6.53	9.6
	27	6085	6.69	6.55	9.63
	35	6125	6.61	6.56	9.6
	43	6165	6.52	6.58	9.56
	51	6205	6.62	6.57	9.61
	59	6245	6.65	6.5	9.59
	67	6285	6.56	6.53	9.56
	75	6325	6.58	6.6	9.6
	83	6365	6.52	6.59	9.57
	91	6405	6.6	6.64	9.63
802.11ax HE80	7	5985	9.6	9.54	12.58
	23	6065	9.57	9.69	12.64
	39	6145	9.6	9.59	12.61
	55	6225	9.55	9.54	12.56
	71	6305	9.65	9.55	12.61
	87	6385	9.67	9.57	12.63
802.11ax HE160	15	6025	10.47	10.47	13.48
	47	6185	10.37	10.41	13.4
	79	6345	10.41	10.32	13.38

Conducted Power (Full)			
UNII-6 Ant 1			
Mode	Channel	Frequency	SISO Ant 1 Avg. Power
802.11ax HE20	97	6435	6.58
	101	6455	6.53
	105	6475	6.7
	109	6495	6.61
	113	6515	6.62
	117	6535	6.69
802.11ax HE40	99	6445	9.59
	107	6485	9.55
	115	6525	9.58
802.11ax HE80	103	6465	12.56
	119	6545	12.61
802.11ax HE160	111	6505	13.47

Conducted Power (Full)			
UNII-6 Ant 2			
Mode	Channel	Frequency	SISO Ant 2 Avg. Power
802.11ax HE20	97	6435	6.57
	101	6455	6.56
	105	6475	6.52
	109	6495	6.56
	113	6515	6.57
	117	6535	6.57
802.11ax HE40	99	6445	9.67
	107	6485	9.66
	115	6525	9.57
802.11ax HE80	103	6465	12.55
	119	6545	12.62
802.11ax HE160	111	6505	13.46

Conducted Power (Full)					
UNII-6 Ant 1+2					
Mode	Channel	Frequency	MIMO Ant 1 Avg. Power	MIMO Ant 2 Avg. Power	MIMO Ant 1+2 Avg. Power
802.11ax HE20	97	6435	3.67	3.6	6.65
	101	6455	3.68	3.68	6.69
	105	6475	3.51	3.52	6.53
	109	6495	3.7	3.56	6.64
	113	6515	3.67	3.64	6.67
	117	6535	3.52	3.53	6.54
802.11ax HE40	99	6445	6.64	6.7	9.68
	107	6485	6.55	6.56	9.57
	115	6525	6.54	6.61	9.59
802.11ax HE80	103	6465	9.64	9.67	12.67
	119	6545	9.53	9.59	12.57
802.11ax HE160	111	6505	10.47	10.47	13.48

Conducted Power (Full)			
UNII-7 Ant 1			
Mode	Channel	Frequency	SISO Ant 1 Avg. Power
802.11ax HE20	121	6555	6.62
	125	6575	6.64
	129	6595	6.5
	133	6615	6.69
	137	6635	6.62
	141	6655	6.5
	145	6675	6.55
	149	6695	6.58
	153	6715	6.51
	157	6735	6.7
	161	6755	6.51
	165	6775	6.5
	169	6795	6.5
	173	6815	6.63
	177	6835	6.53
	181	6855	6.7
	185	6875	6.57
802.11ax HE40	123	6565	9.59
	131	6605	9.58
	139	6645	9.53
	147	6685	9.51
	155	6725	9.54
	163	6765	9.54
	171	6805	9.68
	179	6845	9.63
	187	6885	9.51
802.11ax HE80	135	6625	12.7
	151	6705	12.61
	167	6785	12.66
	183	6865	12.56
802.11ax HE160	143	6665	13.48
	175	6825	13.42

Conducted Power (Full)			
UNII-7 Ant 2			
Mode	Channel	Frequency	SISO Ant 2 Avg. Power
802.11ax HE20	121	6555	6.52
	125	6575	6.62
	129	6595	6.5
	133	6615	6.63
	137	6635	6.58
	141	6655	6.5
	145	6675	6.52
	149	6695	6.68
	153	6715	6.65
	157	6735	6.64
	161	6755	6.52
	165	6775	6.57
	169	6795	6.56
	173	6815	6.62
	177	6835	6.66
	181	6855	6.55
	185	6875	6.57
802.11ax HE40	123	6565	9.67
	131	6605	9.54
	139	6645	9.53
	147	6685	9.62
	155	6725	9.65
	163	6765	9.58
	171	6805	9.51
	179	6845	9.55
	187	6885	9.53
802.11ax HE80	135	6625	12.68
	151	6705	12.56
	167	6785	12.53
	183	6865	12.55
802.11ax HE160	143	6665	13.44
	175	6825	13.38

Conducted Power (Full)					
UNII-7 Ant 1+2					
Mode	Channel	Frequency	MIMO Ant 1 Avg. Power	MIMO Ant 2 Avg. Power	MIMO Ant 1+2 Avg. Power
802.11ax HE20	121	6555	3.53	3.67	6.61
	125	6575	3.69	3.51	6.61
	129	6595	3.6	3.6	6.61
	133	6615	3.64	3.68	6.67
	137	6635	3.55	3.6	6.59
	141	6655	3.59	3.63	6.62
	145	6675	3.69	3.52	6.62
	149	6695	3.54	3.62	6.59
	153	6715	3.65	3.5	6.59
	157	6735	3.65	3.61	6.64
	161	6755	3.59	3.54	6.58
	165	6775	3.54	3.63	6.6
	169	6795	3.67	3.61	6.65
	173	6815	3.51	3.55	6.54
	177	6835	3.59	3.58	6.6
	181	6855	3.58	3.7	6.65
	185	6875	3.62	3.54	6.59
802.11ax HE40	123	6565	6.63	6.7	9.68
	131	6605	6.55	6.65	9.61
	139	6645	6.58	6.6	9.6
	147	6685	6.59	6.66	9.64
	155	6725	6.54	6.68	9.62
	163	6765	6.53	6.51	9.53
	171	6805	6.51	6.67	9.6
	179	6845	6.53	6.62	9.59
	187	6885	6.64	6.65	9.66
802.11ax HE80	135	6625	9.54	9.55	12.56
	151	6705	9.67	9.51	12.6
	167	6785	9.54	9.68	12.62
	183	6865	9.5	9.68	12.6
802.11ax HE160	143	6665	10.48	10.45	13.48
	175	6825	10.46	10.44	13.46

Conducted Power (Full)			
UNII-8 Ant 1			
Mode	Channel	Frequency	SISO Ant 1 Avg. Power
802.11ax HE20	189	6895	6.61
	193	6915	6.63
	197	6935	6.65
	201	6955	6.58
	205	6975	6.53
	209	6995	6.56
	213	7015	6.68
	217	7035	6.51
	221	7055	6.56
	225	7075	6.62
	229	7095	6.61
	233	7115	6.66
802.11ax HE40	195	6925	9.66
	203	6965	9.61
	211	7005	9.66
	219	7045	9.64
	227	7085	9.64
802.11ax HE80	199	6945	12.53
	215	7025	12.64
802.11ax HE160	207	6985	13.42

Conducted Power (Full)			
UNII-8 Ant 2			
Mode	Channel	Frequency	SISO Ant 2 Avg. Power
802.11ax HE20	189	6895	6.6
	193	6915	6.66
	197	6935	6.52
	201	6955	6.7
	205	6975	6.54
	209	6995	6.51
	213	7015	6.63
	217	7035	6.6
	221	7055	6.56
	225	7075	6.59
	229	7095	6.61
	233	7115	6.6
802.11ax HE40	195	6925	9.53
	203	6965	9.56
	211	7005	9.56
	219	7045	9.54
	227	7085	9.57
802.11ax HE80	199	6945	12.51
	215	7025	12.6
802.11ax HE160	207	6985	13.43

Conducted Power (Full)					
UNII-8 Ant 1+2					
Mode	Channel	Frequency	MIMO Ant 1 Avg. Power	MIMO Ant 2 Avg. Power	MIMO Ant 1+2 Avg. Power
802.11ax HE20	189	6895	3.62	3.65	6.65
	193	6915	3.58	3.64	6.62
	197	6935	3.63	3.59	6.62
	201	6955	3.61	3.51	6.57
	205	6975	3.66	3.66	6.67
	209	6995	3.66	3.55	6.62
	213	7015	3.52	3.67	6.61
	217	7035	3.65	3.56	6.62
	221	7055	3.54	3.64	6.6
	225	7075	3.55	3.65	6.61
	229	7095	3.59	3.7	6.66
	233	7115	3.63	3.67	6.66
802.11ax HE40	195	6925	6.5	6.64	9.58
	203	6965	6.58	6.52	9.56
	211	7005	6.54	6.67	9.62
	219	7045	6.7	6.56	9.64
	227	7085	6.65	6.7	9.69
802.11ax HE80	199	6945	9.62	9.59	12.62
	215	7025	9.65	9.63	12.65
802.11ax HE160	207	6985	10.44	10.47	13.47

Appendix F. SAR and Incident Power Density Test Result

SAR Results for Body Exposure Condition.

Note:
1. SAR testing for WLAN was performed on the maximum power mode.
2. SAR testing for LTE / NR was performed on the maximum power mode.
3. The “< 0.001” means there is no SAR value or the SAR is too low to be measured.
4. Per KDB 388624 APPENDIX OVER6G, the minimum of 5 channels to perform IPD across U-NII 5,6,7 and 8. and measured results were scaled by factor 1.545 to reported power density when measurement uncertainty exceed 30%.

Body SAR Test Result

System & Position								DUT Configuration		SAR							
Plot No.	Band	Mode	Test Position	Separation Distance (mm)	Channel	RB#	RB offset	Sample	Ant Status	Duty Cycle	Crest Factor	Max. Tune-up Power (dBm)	Measured Conducted Power (dBm)	Scaling Factor	Power Drift (dB)	Measured SAR-1g (W/kg)	Scaled SAR-1g (W/kg)
1	LTE 2	QPSK20M	Bottom of Laptop	0	18900	50	0	1	Ant 2	-	1.00	23.00	21.74	1.34	-0.17	0.025	0.03
2	LTE 7	QPSK20M	Bottom of Laptop	0	21100	50	0	1	Ant 2	-	1.00	23.00	21.88	1.29	-0.09	0.043	0.06
3	LTE 66	QPSK20M	Bottom of Laptop	0	132572	1	0	1	Ant 2	-	1.00	24.00	23.51	1.12	-0.02	0.056	0.06
4	LTE 48	QPSK20M	Bottom of Laptop	0	55340	1	0	1	Ant 2	-	1.00	22.00	20.80	1.32	0.05	0.02	0.03
5	5GNR-n2	BPSK20M	Bottom of Laptop	0	376000	1	1	1	Ant 2	-	1.00	24.00	23.07	1.24	-0.02	0.021	0.03
6	5GNR-n7	BPSK20M	Bottom of Laptop	0	507000	1	1	1	Ant 2	-	1.00	24.00	23.58	1.10	-0.05	0.032	0.04
7	5GNR-n41	BPSK100M	Bottom of Laptop	0	518598	1	1	1	Ant 2	-	1.00	24.00	23.16	1.21	0.08	0.035	0.04
8	5GNR-n66	BPSK20M	Bottom of Laptop	0	354000	1	1	1	Ant 2	-	1.00	24.00	23.26	1.19	-0.07	0.039	0.05
	WLAN2.4G	802.11b	Bottom of Laptop	0	1			1	Ant 1	98.80	1.01	21.00	20.98	1.00	0.05	0.137	0.14
20	WLAN2.4G	802.11b	Bottom of Laptop	0	1			1	Ant 2	99.40	1.01	21.00	20.99	1.00	0.02	0.178	0.18
	WLAN2.4G	802.11n HT40	Bottom of Laptop	0	6			1	Ant 1+2	98.40	1.02	21.00	20.97	1.01	-0.06	0.084	0.09
	WLAN2.4G	802.11b	Bottom of Laptop	0	6			1	Ant 2	99.40	1.01	21.00	20.91	1.02	-0.13	0.135	0.14
	WLAN2.4G	802.11b	Bottom of Laptop	0	11			1	Ant 2	99.40	1.01	21.00	20.95	1.01	-0.19	0.12	0.12
	WLAN2.4G	802.11b	Bottom of Laptop	0	12			1	Ant 2	99.40	1.01	19.00	18.94	1.01	0.1	0.11	0.11
	WLAN2.4G	802.11b	Bottom of Laptop	0	13			1	Ant 2	99.40	1.01	16.00	15.98	1.00	0.14	0.048	0.05
	WLAN2.4G	802.11b	Bottom of Laptop	0	1			2	Ant 2	99.40	1.01	21.00	20.99	1.00	-0.02	0.158	0.16
	WLAN5.3G	802.11a	Bottom of Laptop	0	60			1	Ant 1	97.20	1.03	21.00	20.98	1.00	0.04	0.044	0.05
	WLAN5.3G	802.11n HT40	Bottom of Laptop	0	54			1	Ant 2	97.90	1.02	21.00	20.98	1.00	0.14	0.037	0.04
	WLAN5.3G	802.11n HT20	Bottom of Laptop	0	52			1	Ant 1+2	98.70	1.01	21.00	20.99	1.00	-0.07	0.025	0.03
21	WLAN5.3G	802.11a	Bottom of Laptop	0	52			1	Ant 1	97.20	1.03	21.00	20.94	1.01	0.04	0.057	0.06
	WLAN5.3G	802.11a	Bottom of Laptop	0	56			1	Ant 1	97.20	1.03	21.00	20.96	1.01	-0.17	0.042	0.04
	WLAN5.3G	802.11a	Bottom of Laptop	0	64			1	Ant 1	97.20	1.03	21.00	20.71	1.07	0.04	0.038	0.04
	WLAN5.3G	802.11a	Bottom of Laptop	0	52			2	Ant 1	97.20	1.03	21.00	20.94	1.01	0.1	0.045	0.05

Body SAR Test Result																	
System & Position								DUT Configuration		SAR							
Plot No.	Band	Mode	Test Position	Separation Distance (mm)	Channel	RB#	RB offset	Sample	Ant Status	Duty Cycle	Crest Factor	Max. Tune-up Power (dBm)	Measured Conducted Power (dBm)	Scaling Factor	Power Drift (dB)	Measured SAR-1g (W/kg)	Scaled SAR-1g (W/kg)
22	WLAN5.6G	802.11ac VHT80	Bottom of Laptop	0	138			1	Ant 1	97.00	1.03	21.00	20.99	1.00	0.09	0.039	0.04
	WLAN5.6G	802.11ac VHT80	Bottom of Laptop	0	138			1	Ant 2	98.50	1.02	21.00	20.96	1.01	0.18	0.031	0.03
	WLAN5.6G	802.11ac VHT80	Bottom of Laptop	0	138			1	Ant 1+2	98.60	1.01	21.00	20.99	1.00	-0.07	0.022	0.02
	WLAN5.6G	802.11ac VHT80	Bottom of Laptop	0	106			1	Ant 1	97.00	1.03	21.00	20.98	1.00	0.03	0.034	0.04
	WLAN5.6G	802.11ac VHT80	Bottom of Laptop	0	122			1	Ant 1	97.00	1.03	21.00	20.94	1.01	0.19	0.035	0.04
	WLAN5.6G	802.11ac VHT80	Bottom of Laptop	0	138			2	Ant 1	97.00	1.03	21.00	20.99	1.00	-0.14	0.032	0.03
23	WLAN5.8G	802.11ac VHT80	Bottom of Laptop	0	155			1	Ant 1	97.00	1.03	21.00	20.94	1.01	-0.02	0.03	0.03
	WLAN5.8G	802.11ac VHT80	Bottom of Laptop	0	155			1	Ant 2	98.50	1.02	21.00	20.96	1.01	0.08	0.022	0.02
	WLAN5.8G	802.11ac VHT80	Bottom of Laptop	0	155			1	Ant 1+2	98.60	1.01	21.00	20.97	1.01	-0.07	0.013	0.01
	WLAN5.8G	802.11ac VHT80	Bottom of Laptop	0	155			2	Ant 1	97.00	1.03	21.00	20.94	1.01	-0.11	0.025	0.03
24	WLAN5.9G	802.11ac VHT160	Bottom of Laptop	0	163			1	Ant 1	98.00	1.02	13.50	13.49	1.00	-0.01	0.008	0.01
	WLAN5.9G	802.11ac VHT160	Bottom of Laptop	0	163			1	Ant 2	98.00	1.02	13.50	13.48	1.00	-0.03	0.005	0.01
	WLAN5.9G	802.11ac VHT160	Bottom of Laptop	0	163			1	Ant 1+2	99.10	1.01	13.50	13.49	1.00	0.04	0.004	0.00
	WLAN5.9G	802.11ac VHT160	Bottom of Laptop	0	163			2	Ant 1	98.00	1.02	13.50	13.49	1.00	0.05	0.005	0.01
	BT	BR / EDR	Bottom of Laptop	0	78			1	Ant 2	77.07	1.30	10.50	9.91	1.15	0.11	0.018	0.03
	BT	BR / EDR	Bottom of Laptop	0	0			1	Ant 2	77.07	1.30	10.50	9.52	1.25	0.15	0.017	0.03
25	BT	BR / EDR	Bottom of Laptop	0	39			1	Ant 2	77.07	1.30	10.50	9.72	1.20	0.09	0.022	0.03
	BT	BR / EDR	Bottom of Laptop	0	39			2	Ant 2	77.07	1.30	10.50	9.72	1.20	0.17	0.019	0.03

SAR and Power Density Test Result

System & Position						DUT Configuration		SAR										Power Density								
Plot No.	Band	Mode	Test Position	Separation Distance (mm)	Channel	Sample	Ant Status	Duty Cycle	Crest Factor	Max. Tune-up Power (dBm)	Measured Conducted Power (dBm)	Scaling Factor	Power Drift (dB)	Measured SAR-1g (W/kg)	Scaled SAR-1g (W/kg)	Measured APD W/m^2 (4cm^2)	Scaled APD W/m^2 (4cm^2)	Grid Step [λ]	iPD [W/m2]	Scaling Factor for Measurement Uncertainty	Averaging Area [cm2]	Power Drift [dB]	Normal psPD [W/m2]	Scaled Normal psPD [W/m2]	Total psPD [W/m2]	Scaled Total psPD [W/m2]
26	UNII-5	802.11ax HE160	Bottom of Laptop	0	15	1	Ant 1	98.00	1.02	13.50	13.49	1.00	0	<0.001	0.00	<0.001	0.00	0.0502	3.50	1.545	4.00	0.18	0.136	0.21	0.293	0.46
	UNII-5	802.11ax HE160	Bottom of Laptop	0	15	1	Ant 2	97.40	1.03	13.50	13.47	1.01	0	<0.001	0.00	<0.001	0.00									
	UNII-5	802.11ax HE160	Bottom of Laptop	0	15	1	Ant 1+2	98.90	1.01	13.50	13.48	1.00	0	<0.001	0.00	<0.001	0.00									
	UNII-5	802.11ax HE160	Bottom of Laptop	0	47	1	Ant 1	98.00	1.02	13.50	13.45	1.01	0	<0.001	0.00	<0.001	0.00	0.0515	2.15	1.545	4.00	0.02	0.085	0.13	0.182	0.29
	UNII-5	802.11ax HE160	Bottom of Laptop	0	79	1	Ant 1	98.00	1.02	13.50	13.42	1.02	0	<0.001	0.00	<0.001	0.00									
	UNII-6	802.11ax HE160	Bottom of Laptop	0	111	1	Ant 1	98.00	1.02	13.50	13.47	1.01	0	<0.001	0.00	<0.001	0.00	0.0542	2.47	1.545	4.00	-0.11	0.091	0.14	0.212	0.34
	UNII-7	802.11ax HE160	Bottom of Laptop	0	143	1	Ant 1	98.00	1.02	13.50	13.48	1.00	0	<0.001	0.00	<0.001	0.00	0.0555	2.81	1.545	4.00	0.15	0.103	0.16	0.233	0.37
	UNII-7	802.11ax HE160	Bottom of Laptop	0	175	1	Ant 1	98.00	1.02	13.50	13.42	1.02	0	<0.001	0.00	<0.001	0.00									
	UNII-8	802.11ax HE160	Bottom of Laptop	0	207	1	Ant 1	98.00	1.02	13.50	13.43	1.02	0	<0.001	0.00	<0.001	0.00	0.0582	1.55	1.545	4.00	0.13	0.036	0.06	0.081	0.13
	UNII-5	802.11ax HE160	Bottom of Laptop	0	15	2	Ant 1	98.00	1.02	13.50	13.49	1.00	0	<0.001	0.00	<0.001	0.00									

Appendix H. Analysis of Simultaneous Transmission.

The analysis of simultaneous transmission SAR are shown as below.

<Possibilities of Simultaneous Transmission>

The simultaneous transmission possibilities for this device are listed as below.

Simultaneous TX Combination	Capable Transmit Configurations	Body Exposure Condition
A	WWAN_Ant0+WWAN_Ant2 + WLAN 2.4G_Ant1+2	Yes
B	WWAN_Ant0+WWAN_Ant2 + WLAN 2.4G_Ant1 + BT_Ant2	Yes
C	WWAN_Ant0+WWAN_Ant2 + WLAN 5G_Ant1 + BT_Ant2	Yes
D	WWAN_Ant0+WWAN_Ant2 + WLAN 6G_Ant1 + BT_Ant2	Yes
E	WWAN_Ant0+WWAN_Ant2 + WLAN 5G_Ant1+2 + BT_Ant2	Yes
F	WWAN_Ant0+WWAN_Ant2 + WLAN 6G_Ant1+2 + BT_Ant2	Yes

Notes

1. The WLAN 2.4G and WLAN 5G and WLAN 6G cannot transmit simultaneously.

Simultaneous Transmission SAR Evaluation															
Position	1	2	3	4	5	6	7	8	9	A(1+2+4)	B(1+2+3+9)	C(1+2+5+9)	D(1+2+7+9)	E(1+2+6+9)	F(1+2+8+9)
	WWAN Ant 0	WWAN Ant 2	WLAN 2.4GHz Ant 1	WLAN 2.4GHz Ant 1+2	Max WLAN 5GHz Ant 1	Max WLAN 5GHz Ant 1+2	Max WLAN 6GHz Ant 1	Max WLAN 6GHz Ant 1+2	Max BT Ant 2	Summimg result 1g SAR W/kg	Summimg result 1g SAR W/kg	Summimg result 1g SAR W/kg	Summimg result 1g SAR W/kg	Summimg result 1g SAR W/kg	Summimg result 1g SAR W/kg
	1g SAR W/kg	1g SAR W/kg	1g SAR W/kg	1g SAR W/kg	1g SAR W/kg	1g SAR W/kg	1g SAR W/kg	1g SAR W/kg	1g SAR W/kg						
Bottom of Laptop	0.40	0.07	0.14	0.09	0.06	0.03	0.00	0.00	0.03	0.56	0.64	0.56	0.50	0.53	0.50

Total Exposure Ratio (Body)					
Position	1	2	3	A(1+3)	B(2+3)
	Max WLAN 6GHz Ant 1	Max WLAN 6GHz Ant 1+2	Max BT Ant 2	Total Exposure Ratio	Total Exposure Ratio
	W/m^2	W/m^2	1g SAR W/kg		
Bottom of Laptop	0.46	0.00	0.03	0.06	0.02