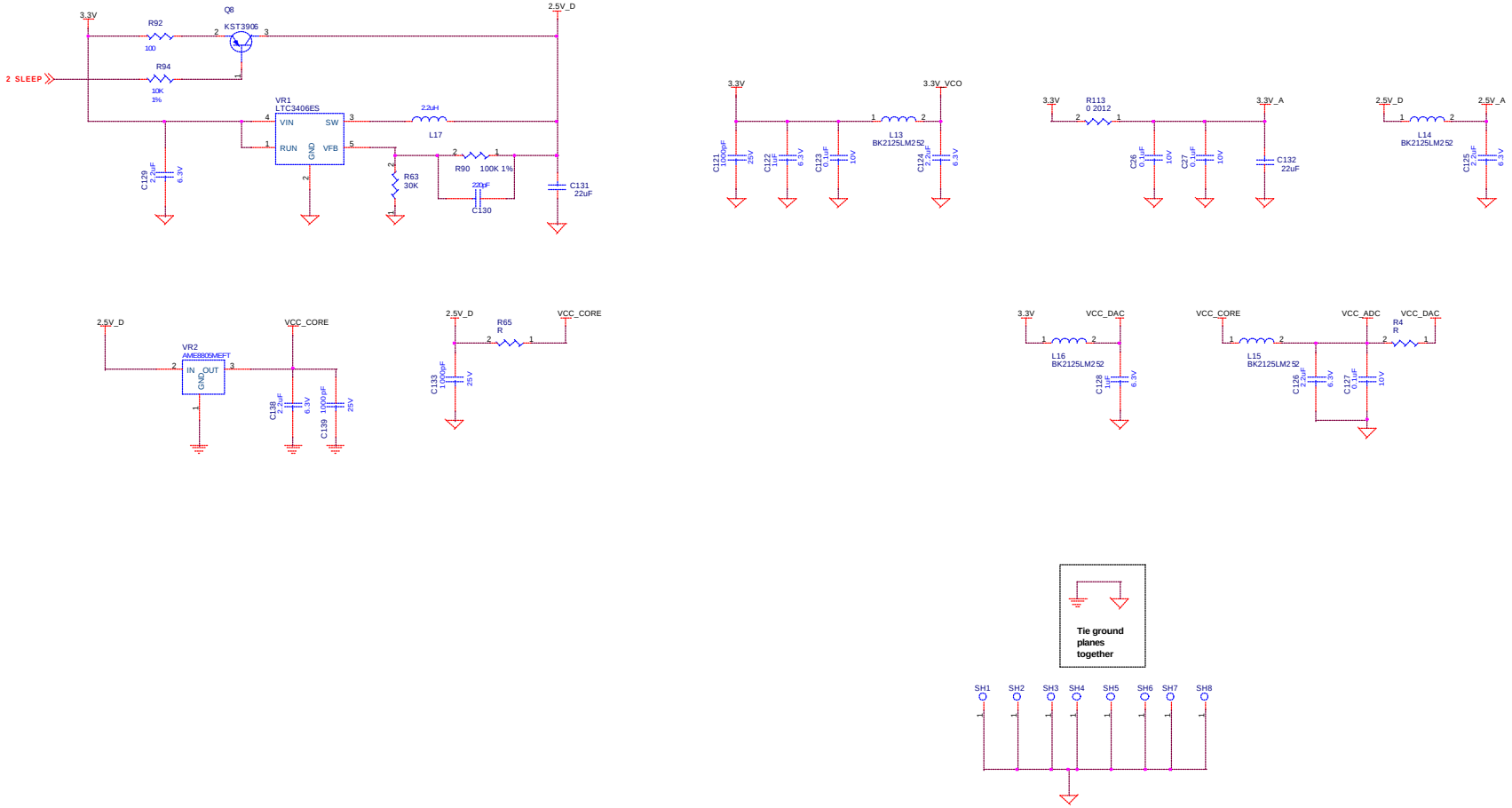

Samsung Electro Mechanics CO.,LTD
314, Maetan-3Dong, Paldal-Gu,Suwon,
Kyunggi-Do, KOREA, 442-743
TEL: 82-31-210-3341
FAX: 82-31-210-5529

Title

SWL-2700M

Size	Document Number	Rev
C		

Date: Wednesday, April 21, 2004 Sheet 1 of 5

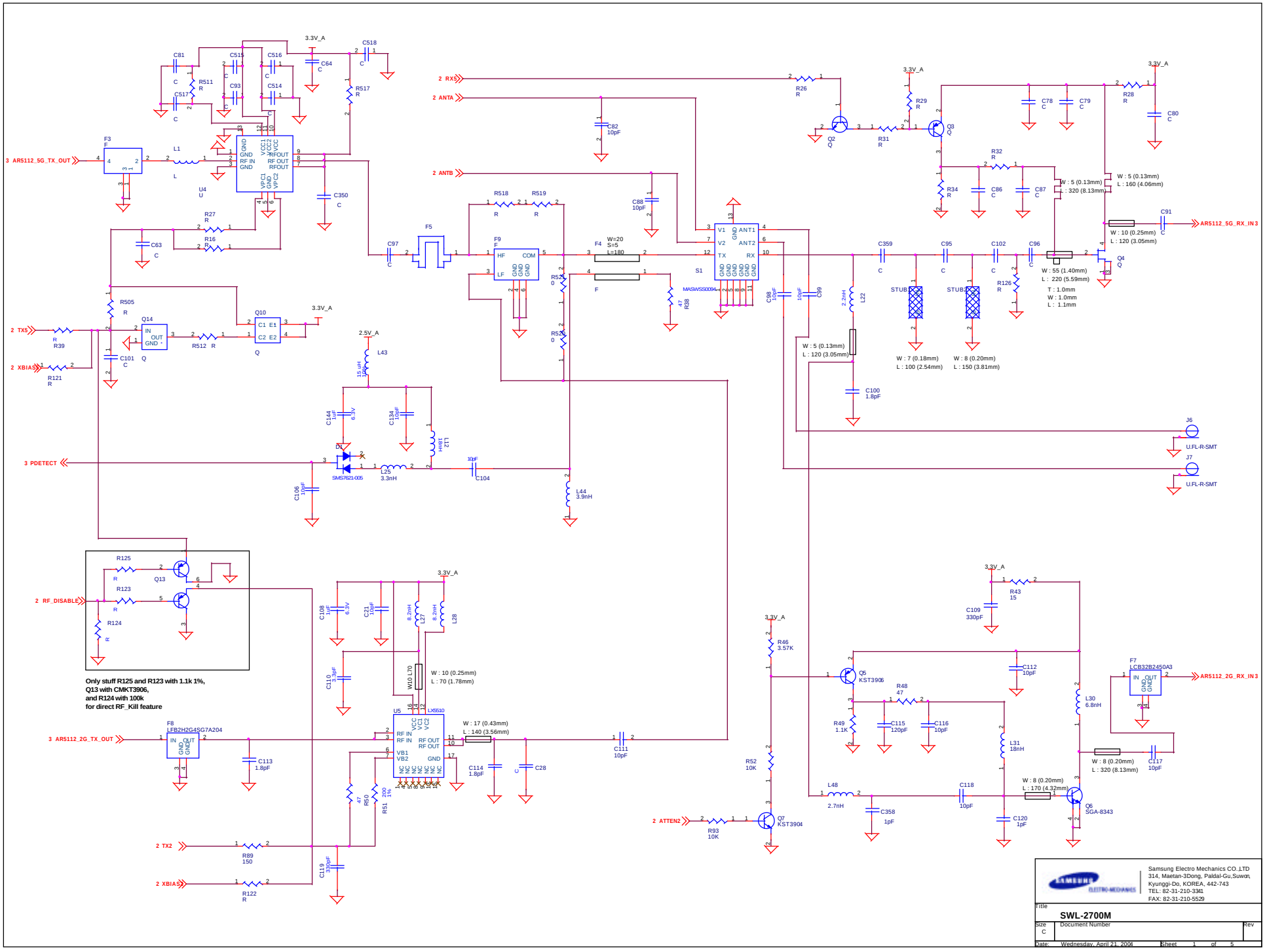
3 AR5112_5G_TX_OUT
2 RX5
2 ANTA
2 ANTB
2 TX5
2 XBIAS
3 PDETECT
2 RF_DISABLE
3 AR5112_2G_TX_OUT
2 TX2
2 XBIAS
2 ATTEN2
AR5112_5G_RX_IN3
AR5112_2G_RX_IN3
3.3V_A
2.5V_A
U4
U5
F3
F5
F7
F8
F9
S1
Q2
Q3
Q4
Q5
Q6
Q7
Q10
Q13
Q14
J6
J7
U.FL-R-SMT
MASWSS0094
LX5510
LFB2H2G45SG7A204
LCB32B2450A3
SGA-8343
KST3906
KST3904
SMS7621-005
W : 5 (0.13mm)
L : 160 (4.06mm)
W : 5 (0.13mm)
L : 320 (8.13mm)
W : 10 (0.25mm)
L : 120 (3.05mm)
W : 55 (1.40mm)
L : 220 (5.59mm)
T : 1.0mm
W : 1.0mm
L : 1.1mm
W : 7 (0.18mm)
L : 100 (2.54mm)
W : 8 (0.20mm)
L : 150 (3.81mm)
W : 10 (0.25mm)
L : 70 (1.78mm)
W : 17 (0.43mm)
L : 140 (3.56mm)
W : 8 (0.20mm)
L : 320 (8.13mm)
W : 8 (0.20mm)
L : 170 (4.32mm)
Only stuff R125 and R123 with 1.1k 1%,
Q13 with CMKT3906,
and R124 with 100k
for direct RF_Kill feature
Samsung Electro Mechanics CO.,LTD
314, Maetan-3Dong, Paldal-Gu,Suwon,
Kyunggi-Do, KOREA, 442-743
TEL: 82-31-210-3341
FAX: 82-31-210-5529
Title
SWL-2700M
Size
C
Document Number
Rev
Date: Wednesday, April 21, 2004
Sheet 1 of 5

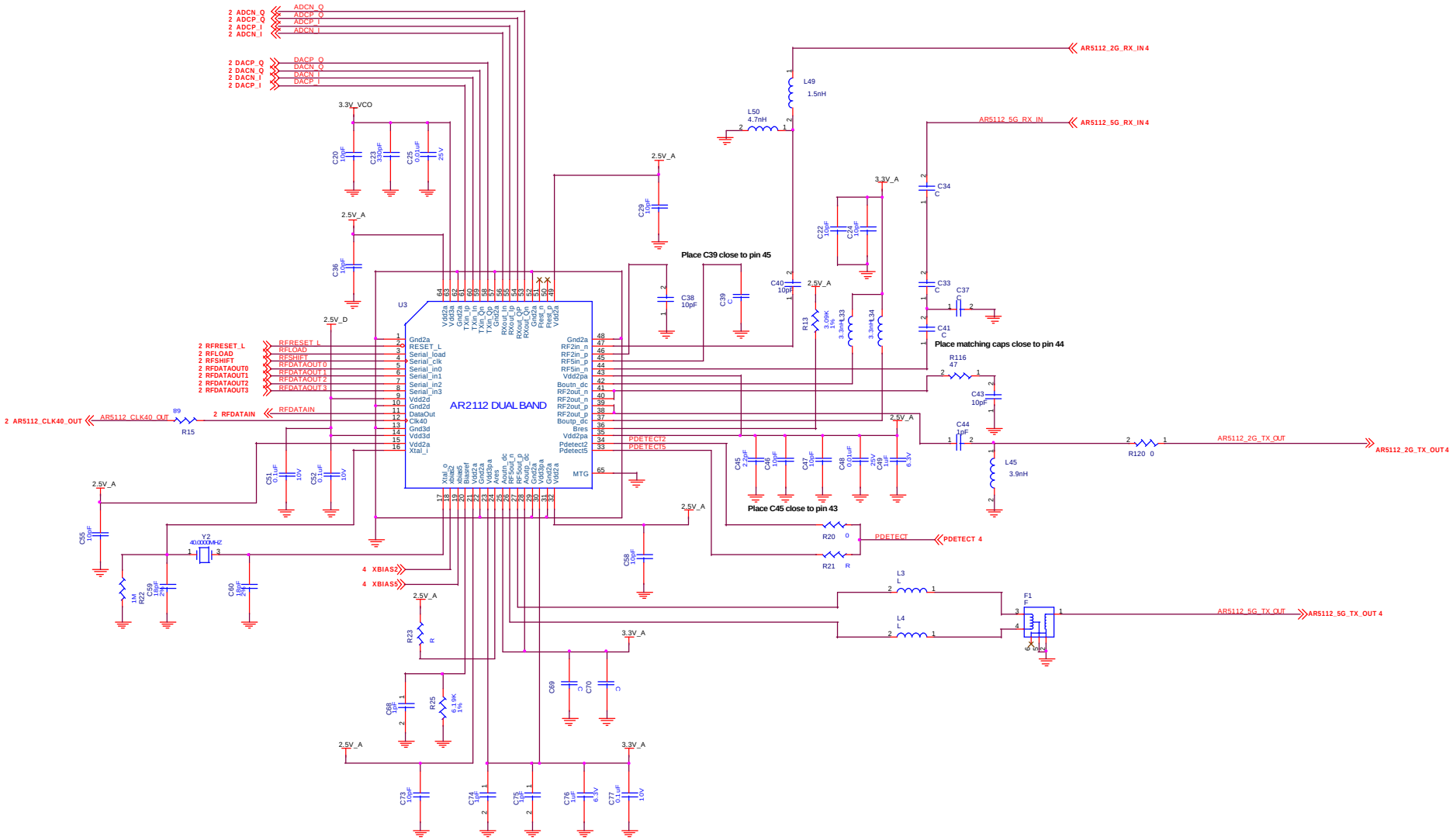
AR2112 DUAL BAND
U3
Place C39 close to pin 45
Place matching caps close to pin 44
Place C45 close to pin 43
AR5112_2G_RX_IN 4
AR5112_5G_RX_IN 4
AR5112_2G_TX_OUT 4
AR5112_5G_TX_OUT 4
PDETECT 4
AR5112_CLK40_OUT
2 AR5112_CLK40_OUT
2 RFDATAIN
4 XBIAS2
4 XBIAS5
2 ADCN_Q
2 ADCP_Q
2 ADCP_I
2 ADCN_I
2 DACP_Q
2 DACN_Q
2 DACN_I
2 DACP_I
2 RFRESET_L
2 RFLOAD
2 RFSHIFT
2 RFDATAOUT0
2 RFDATAOUT1
2 RFDATAOUT2
2 RFDATAOUT3
3.3V_VCO
2.5V_A
2.5V_D
3.3V_A
Y2
40.00000MHZ
F1
Samsung Electro Mechanics CO.,LTD
314, Maetan-3Dong, Paldal-Gu,Suwon,
Kyunggi-Do, KOREA, 442-743
TEL: 82-31-210-3301
FAX: 82-31-210-5529
Title
SWL-2700M
Size C
Document Number
Rev
Date: Wednesday, April 21, 2004
Sheet 1 of 5

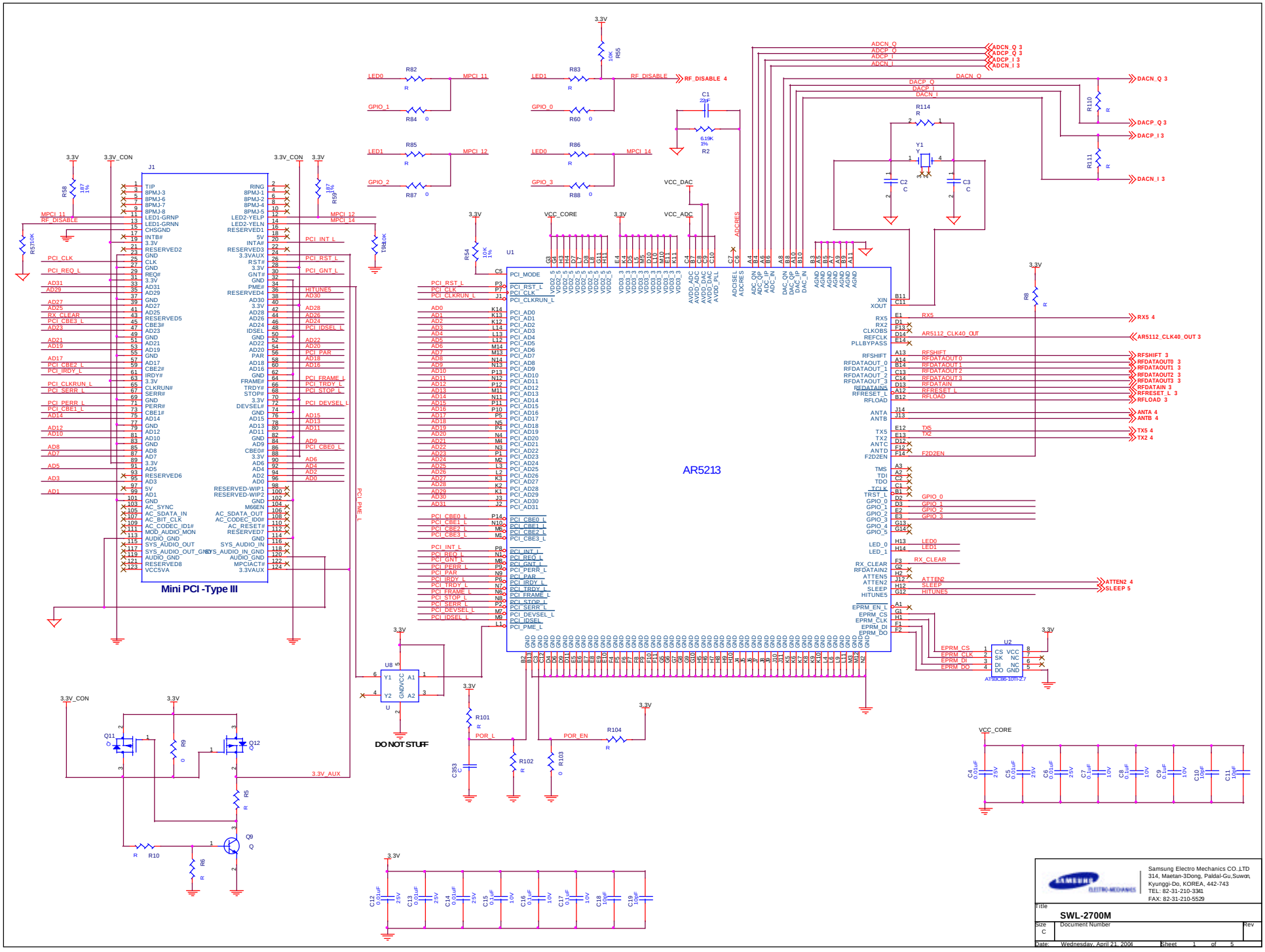
Mini PCI -Type III
AR5213
DO NOT STUFF
Samsung Electro Mechanics CO.,LTD
314, Maetan-3Dong, Paldal-Gu,Suwon,
Kyunggi-Do, KOREA, 442-743
TEL: 82-31-210-3341
FAX: 82-31-210-5529
Title
SWL-2700M
Size
C
Document Number
Rev
Date: Wednesday, April 21, 2004
Sheet 1 of 5

DATE	REVISION NUMBER	INITIALS	DESCRIPTION
20040205	Rev1.4-0205	ysjeon	For Pre-production
20040412	Rev1.5-0412	ysjeon	R82: R, R85: R, R86: R, R83: R, R104:R,R101:R

SWL-2700M

11b/g MiniPCI

SEMCO CONFIDENTIAL
PRELIMINARY

Samsung Electro Mechanics CO.,LTD
314, Maetan-3Dong, Paldal-Gu,Suwon,
Kyunggi-Do, KOREA, 442-743
TEL: 82-31-210-3341
FAX: 82-31-210-5529

Title: SWL-2700M

Size: C | Document Number | Rev

Date: Wednesday, April 21, 2004 | Sheet 1 of 5