SECTION 4
Reading from/Writing to ID Tags

When SECS is Used 64

When SECS is Not Used 74

When SECS is Used

CHECK!

The SEMI standards are subject to revision: you must refer to the actual standards.

- SEMI E99 THE CARRIER ID READER/WRITER FUNCTIONAL STANDARD
- SEMI E5 EQUIPMENT COMMUNICATION STANDARD 2 MESSAGE CONTENT (SECS II)
- SEMI E4 EQUIPMENT COMMUNICATION STANDARD 1 MESSAGE TRANSFER (SECS I)

SECS Protocol Specifications Refer to page 113.

Message Specifications

List of Messages Used

Classification	S	F	Direction	SECS II names	See
General purpose messages	1	1	S,H→E,reply	Are You There Request	p.66
	1	2	S,H←E	On Line Data	p.66
CIDRW system messages	18	1	S,H→E,reply	Read Attribute Request	p.66
	18	2	S,H←E	Read Attribute Data	p.66
	18	3	S,H→E,reply	Write Attribute Request	p.67
	18	4	S,H←E	Write Attribute Acknowledge	p.67
	18	5	S,H→E,reply	Read Request	p.68
	18	6	S,H←E	Read Data	p.68
	18	7	S,H→E,reply	Write Request	p.69
	18	8	S,H←E	Write Acknowledge	p.69
	18	9	S,H→E,reply	Read ID Request	p.69
	18	10	S,H←E	Read ID Data	p.69
	18	11	S,H→E,reply	Write ID Request	p.70
	18	12	S,H←E	Write ID Acknowledge	p.70
	18	13	S,H→E,reply	Subsystem Command Request	p.70
	18	14	S,H←E	Subsystem Command Acknowledge	p.70

List of Error Messages Refer to page 84.

Data Item Dictionary

SECS II data items	Name	Format	Value
ATTRID	Attribute ID	20	Attribute name
ATTRVAL	Attribute value	20	Attribute value
MID	Carrier ID	20	All characters 00H-0FFH
DATA	Data	20	All characters 00H-0FFH
DATALENGTH	DataSize	52	Data Segment Area Refer to page 48.
DATASEG	DataSeg	20	
STATUS	PM information	20	"NE": Normally executed
SSACK	Result status	20	"NO": Normal "EE": Execution error *3 "CE": Communications error "HE": Hardware error *3 "TE": Tag error *3

Data Item Dictionary

SECS II data items	Name	Format	Value
List of STATUS	Status	L,4 1.<PMInformation> 2.<AlarmStatus> 3.<OperationalStatus> 4.<HeadStatus> *2	The STATUS values are included in the PM information.
CPVAL	State request	20	"OP", "MT", "PS" *1
TARGETID	Target ID	20	"00"-"31" "00" indicates the CIDRW Controller itself.
SSCMD	Subsystem commands	20	"ChangeState" "GetStatus" "PerformDiagnostics" "Reset"

*1: "PS" is an expansion command for this unit.
*2: When the TARGET ID is "00" (CIDRW), this is a zero length item.
*3: "EE," "HE," and "TE" are used only with S18F6, S18F8, S18F10, and S18F12.

CHECK!

S9F7 responses
An S9F7 response is given when a message in an illegal format is received from the host device.
"Illegal format" here means that there is a problem with the message composition, such as illegal attributes, or insufficient or too many items. If other problems relating to the item contents arise, the response is SSACK = "CE" (communications error).

■ Specifications for Each Stream/Function

• Online check

S1,F1	Are You There Request	S,H→E,reply
		Header only

S1,F2	On Line Data	S,H←E
L,2		
	1.<MDLN>	
	2.<SOFTREV>	
• Set MDLN (model number). • Set SOFTREV (software revision level).		

• Get attributes

S18,F1	Read Attribute Request	S,H→E,reply
L,2		
	1.<TARGETID>	"00"-"31"
	2.L,n	
	1.<ATTRID1>	
	.	
	n.<ATTRIDn>	
• The setting for reading all attributes (CIDRW Controller or heads) is n = 0.		

S18,F2	Read Attribute Data	S,H←E
L,4		
	1.<TARGETID>	"00"-"31"
	2.<SSACK>	
	3.L,n	
	1.<ATTRVAL1>	
	.	
	n.<ATTRVALn>	
	4.L,s	
	1.<STATUS1>	
	.	
	s.<STATUSs>	
• The order of the attribute data corresponds to the attribute ID specified by S18, F1. When reading of all attributes is specified, unsupported attribute items (ATTRVAL) are omitted. • When the specified target is invalid: n = 0, s = 0, SSACK = "CE" communications error • When one or more undefined attributes are included: n = 0, s = 0, SSACK = "CE" communications error • When head attributes are specified with TARGET = "00" or CIDRW Controller attributes are specified with TARGET <> "00": n = 0, s = 0, SSACK = "CE" communications error • If the status of SSACK is other than "NO" (normal), the List of Status will comprise zero items.		

• Set attributes

F18,F3	Write Attribute Request	S,H→E,reply
L,2		
	1.<TARGETID>	"00" (fixed)
	2.L,n	
	1.L,2	
	1.<ATTRID1>	
	2.<ATTRVAL1>	
	n.L,2	
	1.<ATTRIDn>	
	2,<ATTRVALn>	
Since the attributes for heads are all RO in this system, the target ID is fixed as "00".		

S18,F4	Write Attribute Acknowledge	S,H←E
L,3		
	1.<TARGETID>	"00" (fixed)
	2.<SSACK>	
	3.L,s	
	1.<STATUS1>	
	.	
	s.<STATUSs>	
• When the specified target is invalid: s = 0, SSACK = "CE" communications error • When one or more undefined attributes or RO attributes are included: s = 0, SSACK = "CE" communications error • When illegal attribute data is specified: s = 0, SSACK = "CE" communications error • If the status of SSACK is other than "NO" (normal), the List of Status will comprise zero items.		

• Read data

S18,F5	Read Request	S,H→E,reply
L,3		
	1.<TARGETID>	"01"-"31"
	2.<DATASEG>	
	3.<DATALENGTH>	

- When the data of all segments is batch read, both DATASEG and DATALENGTH are omitted (they are zero length items).
- When all the data for a particular segment is read, DATALENGTH is omitted (it is a zero length item).
- When DATASEG and DATALENGTH are specified, it is not permissible to specify a DATALENGTH that exceeds the maximum length of the relevant DATASEG.
- If a DATALENGTH that is under the set length for DATASEG is specified, only the data corresponding to the specified DATALENGTH is read.

Data Segment Area Refer to page 111.

S18,F6	Read Data	S,H→E,reply
L,4		
	1.<TARGETID>	"01"-"31"
	2.<SSACK>	
	3.<DATA>	
	4.L,s	
	1.<STATUS1>	
	.	
	s.<STATUSs>	

- When the specified target is invalid:
  DATA item length = 0, s = 0, SSACK = "CE" communications error
- When an undefined DATASEG is specified, or the DATALENGTH is illegal:
  DATA item length = 0, s = 0,
  SSACK = "CE" communications error
- When reading of all segment data is specified in a system where the data segment is not defined:
  DATA length = 0, SSACK = "NO"
- If the status of SSACK is other than "NO" (normal), the List of Status will comprise zero items.

• Write data

S18,F7	Write Request	S,H→E,reply
L,4		
	1.<TARGETID>	"01"-"31"
	2.<DATASEG>	
	3.<DATALENGTH>	
	4.<DATA>	
• When the data for all segments is batch written, both DATASEG and DATALENGTH are omitted (they are zero length items). • When all the data for a particular segment is written, DATALENGTH is omitted (it is a zero length item). • When DATASEG and DATALENGTH are specified, it is not permissible to specify a DATALENGTH that exceeds the maximum length of the relevant DATASEG. • If a DATALENGTH that is under the set length for DATASEG is specified, only the data corresponding to the specified DATALENGTH is written, compressed into the smaller addresses. • The item lengths of DATASEG and DATA must be matched. • If DATASEG and DATALENGTH are both omitted (made zero length items), the length of DATA must match the total of the set lengths of all segments.		

Data Segment Area Refer to page 111.

S18,F8	Write Acknowledge	S,H←E
L,3		
	1.<TARGETID>	"01"-"31"
	2.<SSACK>	
	3.L,s	
	1.<STATUS1>	
	.	
	s.<STATUSs>	
• When the specified target is invalid: s = 0, SSACK = "CE" communications error • When DATASEG and DATALENGTH are illegal: s = 0, SSACK = "CE" communications error • If the status of SSACK is other than "NO" (normal), the List of Status will comprise zero items.		

• Read ID

S18,F9	Read ID Request	S,H→E,reply
1.<TARGETID>		"01"-"31"

Data Segment Area Refer to page 111.

S18,F10	Read ID Data	S,H←E
L,4		
	1.<TARGETID>	"01"-"31"
	2.<SSACK>	
	3.<MID>	
	4.L,s	
	1.<STATUS1>	
	.	
	s.<STATUSs>	
• When the specified target is invalid: s = 0, MID item length = 0, SSACK = "CE" communications error • If the status of SSACK is other than "NO" (normal), the List of Status will comprise zero items.		

• Write ID

S18,F11	Write ID Request	S,H→E,reply
L,2		
	1.<TARGETID>	"01"-"31"
	2.<MID>	
• If an MID that is under the set ID length is specified, the data is compressed into the smaller addresses, and NULL (0x00) is written as the remaining data.		

Data Segment Area Refer to page 111.

S18,F12	Write ID Acknowledge	S,H←E
L,3		
	1.<TARGETID>	"01"-"31"
	2.<SSACK>	
	3.L,s	
	1.<STATUS1>	
	.	
	s.<STATUSs>	
• When the specified target is invalid: s = 0, SSACK = "CE" communications error • When there is an MID length error: s = 0, SSACK = "CE" communications error • If the status of SSACK is other than "NO" (normal), the List of Status will comprise zero items.		

• Subsystem command (ChangeState)

S18,F13	Subsystem Command Request (ChangeState)	S,H→E,reply
L,3		
	1.<TARGETID>	"00" (fixed)
	2.<SSCMD>	"ChangeState"
	3.L,1	
	1.<CPVAL1>	"OP", "MT" or "PS"
CPVAL = "PS" is a parameter setting unique to this CIDRW Controller for switching to the Setting mode.		

S18,F14	Subsystem Command Acknowledge (ChangeState)	S,H←E
L,3		
	1.<TARGETID>	"00"
	2.<SSACK>	
	3.L,s	
	1.<STATUS1>	
	.	
	s.<STATUSs>	
• When the specified target is invalid: s = 0, SSACK = "CE" communications error • When SSCMD is invalid: s = 0, SSACK = "CE" communications error • When OperationalStatus is BUSY: s = 0, SSACK = "EE" execution error • If the status of SSACK is other than "NO" (normal), the List of Status will comprise zero items.		

• Subsystem command (GetStatus)

S18,F13	Subsystem Command Request (GetStatus)	S,HÅ→,reply
L,3		
	1.<TARGETID>	"00"-"31"
	2.<SSCMD>	"GetStatus"
	3.L,0	

S18,F14	Subsystem Command Acknowledge (GetStatus)	S,H←E
L,3		
	1.<TARGETID>	"00"-"31"
	2.<SSACK>	"GetStatus"
	3.L,s	
	1.<STATUS1>	
	.	
	s.<STATUSs>	

- When the specified target is invalid:
  s = 0, SSACK = "CE" communications error
- When SSCMD is invalid:
  s = 0, SSACK = "CE" communications error
- If the status of SSACK is other than "NO" (normal), the List of Status will comprise zero items.

• Subsystem command (PerformDiagnostics)

S18,F13	Subsystem Command Request (PerformDiagnostics)	S,H→E,reply
L,3		
	1.<TARGETID>	"00"-"31"
	2.<SSCMD>	"PerformDiagnostics"
	3.L,0	

S18,F14	Subsystem command Acknowledge (PerformDiagnostics)	S,H←E
L,3		
	1.<TARGETID>	"00"-"31"
	2.<SSACK>	
	3.L,s	
	1.<STATUS1>	
	.	
	s.<STATUSs>	

- When the specified target is invalid:
  s = 0, SSACK = "CE" communications error
- When SSCMD is invalid:
  s = 0, SSACK = "CE" communications error
- If the status of SSACK is other than "NO" (normal), the List of Status will comprise zero items.

- Subsystem command (Reset)

S18,F13	Subsystem Command Request (Reset)	S,H→E,reply
L,3		
	1.<TARGETID>	"00" (fixed)
	2.<SSCMD>	"Reset"
	3.L,0	

S18,F14	Subsystem Command Acknowledge (Reset)	S,H←E
L,3		
	1.<TARGETID>	"00"
	2.<SSACK>	
	3.L,0	
• When the specified target is invalid: SSACK = "CE" communications error • When SSCMD is invalid: SSACK = "CE" communications error		

■ Operation Conditions

The response messages and response codes (SSACK) in each state are shown below:

State		Initializing	Operating		Maintenance
Message	Function		IDLE	BUSY	
S1,F1	OnlineRequest	S1,F0	S1,F2	S1,F2	S1,F2
S18,F11	WriteID	S18,F0	S18,F0	S18,F0	NO
S18,F7	WriteData	S18,F0	NO	NO	S18,F0
S18,F3	SetAttribute	S18,F0	NO	NO	NO
S18,F13(Reset)	Reset	S18,F0	NO	NO	NO
S18,F9	ReadID	S18,F0	NO	NO	NO
S18,F5	ReadData	S18,F0	NO	NO	S18,F0
S18,F13(PerformDiagnostics)	Diagnostics	S18,F0	NO	NO	NO
S18,F13(GetStatus)	GetStatus	S18,F0	NO	NO	NO
S18,F1	GetAttribute	S18,F0	NO	NO	NO
S18,F13(ChangeState)	ChangeState(to MT)	S18,F0	NO	S18,F0	S18,F0
S18,F13(ChangeState)	ChangeState(to OP)	S18,F0	S18,F0	S18,F0	NO
S18,F13(ChangeState)	ChangeState(to PS)	S18,F0	NO	S18,F0	NO

When SECS is Not Used

Command/Response Format

Command

SOH	Node No.		Command code				Parameter						FCS		CR
							1		· · ·		n				
01h															0Dh

Response

SOH	Node No.		Response code		Parameter						FCS		CR
					1		· · ·		n				
01h													0Dh

Meaning of FCS (frame check sequence)
This is two ASCII code characters obtained by conversion from the 8-bit exclusive logical sum (EOR) of the characters from the character immediately after SOH to the character immediately before FCS.

Example: Reading the data of page 1 and page 2 of node No.1:

Command [SOH]01010000000000C[FCS][CR]
Calculation range

```
'0' (30h) = 0011 0000 )EOR
'1' (31h) = 0011 0001 )EOR
'0' (30h) = 0011 0000 )EOR
'1' (31h) = 0011 0001 )EOR
'0' (30h) = 0011 0000 )EOR
'0' (30h) = 0011 0000 )EOR
'0' (30h) = 0011 0000 )EOR
'0' (30h) = 0011 0000 )EOR
'0' (30h) = 0011 0000 )EOR
'0' (30h) = 0011 0000 )EOR
'0' (30h) = 0011 0000 )EOR
'0' (30h) = 0011 0000 )EOR
'0' (30h) = 0011 0000 )EOR
'C' (43h) = 0100 0011
            0111 0011
              ↓    ↓
              7    3
(ASCII conversion)↓
        '7' (37h)  '3' (33h)
```

SECTION 4 When SECS is Not Used

Command

Command code list

Name	Value	Function	See
READ	0100	When this command is received, the system communicates with the ID Tag, and reads the specified page(s) of data. Any pages up to a maximum of 16 can be selected.	p.76
WRITE	0200	When this command is received, the system communicates with the ID Tag, and writes the specified page(s) of data. Any pages up to a maximum of 16 can be selected.	p.77
Same Write	0300	When this command is received, the system communicates with the ID Tag, and writes the same data in page units to the specified pages. Up to 17 pages, which is the maximum number of pages for an ID Tag, can be specified.	p.79
Byte Write	0400	When this command is received the system communicates with the ID Tag, and writes data to the area specified by a first address and number of bytes. A maximum of 128 bytes can be specified.	p.80
TEST	10	Sends received data to the host device.	p.81
NAK	12	Sends the response made immediately before again.	p.82
Noise measurement	40	Measures the noise in the vicinity of the CIDRW Head.	p.82
RESET	7F	Resets the Amplifier Unit.	p.82

Response code list

Type	Response code	Name	Description
Normal end	00	Normal end	Command execution is completed normally.
Host communications error	14	Format error	There is a mistake in the command format. (E.g. the command code is undefined, or the page or address specification is inappropriate.)
Communications error	70	Communications error	Noise or another hindrance occurs during communication with an ID Tag, and communications cannot be completed normally.
	71	Verification error	Correct data cannot be written to an ID Tag.
	72	No Tag error	Either there is no ID Tag in front of the CIDRW Head, or the CIDRW Head is unable to detect the ID Tag due to environmental factors (e.g. noise).
	7B	Outside write area error	Writing is not completed normally.
	7E	ID system error (1)	The ID Tag is in a status where it cannot execute command processing.
	7F	ID system error (2)	An inapplicable ID Tag has been used.

■ READ

Reads any pages of data from the ID Tag. The maximum number of pages that can be read at one time is 16.

Command

SOH	Node No.		Command code				Page designation (8 characters)								FCS		CR
01h			0	1	0	0											0Dh

Bit	7	-	0	7	-	3	2	1	0	7	6	-	1	0	7	6	-	2	1	0
Page	Sys	-	Sys	Sys	-	Sys	17	16	15	14	13	-	8	7	6	5	-	1	Sys	Sys
Designation	0*	0*		0*	0*	0*	0/1	0/1	0/1	0/1	0/1	•••	0/1	0/1	0/1	0/1	•••	0/1	0*	0*
Value	00			00 - 07						00 - FF					00 - FC					

* Always specify 0. If you specify 1 an error (Response code : 14) will occur.

Parameter description

Parameter	Description
Page designation	Pages are specified by setting the bits corresponding to pages that are to be read to "1" and setting the other bits to "0", then converting the result to a hexadecimal character string.

Data Segment Area Refer to page 111.

The response code (when normal: 00) and the data in the specified pages are returned in ascending order of page numbers.

Response

SOH	Node No.		Response code		Read data														FCS		CR
					Page n						. . .		Page m (n<m)								
					Data 1		· · ·		Data 8				Data 1		· · ·		Data 8				
01h			0	0																	0Dh

Example: Reading the data of pages 1 and 3 of node No.1

Data content of the ID Tag

Page 1	12h	34h	56h	78h	90h	12h	34h	56h
Page 2								
Page 3	11h	22h	33h	44h	55h	66h	77h	88h
Page 4								

Command

SOH	Node No.		Command code				Page designation								FCS		CR
01h	0	1	0	1	0	0	0	0	0	0	0	0	1	4	0	5	0Dh

Binary notation

0	0	0	0	0	0	0	0	0	0	0	0	0	0	0	0	0	0	0	0	0	0	0	0	0	0	0	1	0	1	0	0

Response

SOH	Node No.		Response code		Page 1															Page 3																FCS		CR
01h	0	1	0	0	1	2	3	4	5	6	7	8	9	0	1	2	3	4	5	6	1	1	2	2	3	3	4	4	5	5	6	6	7	7	8	8	0	7	0Dh

■ WRITE

Data is written in page units to the ID Tag. Any page(s) can be specified. It is possible to write to a maximum of 16 pages at one time.

Command

SOH	Node No.		Command code				Page designation (8 characters)								Write data														FCS		CR
															Page n						. . .		Page m (n<m)								
															Data 1		· · ·		Data 8				Data 1		· · ·		Data 8				
01h			0	2	0	0																									0DH

Bit	7	-	0	7	-	3	2	1	0	7	6	-	1	0	7	6	-	2	1	0
Page	Sys	-	Sys	Sys	-	Sys	17	16	15	14	13	-	8	7	6	5	-	1	Sys	Sys
Designation	0*	0*		0*	0*	0*	0/1	0/1	0/1	0/1	0/1	•••	0/1	0/1	0/1	0/1	•••	0/1	0*	0*
Value	00			00 - 07						00 - FF					00 - FC					

* Always specify 0. If you specify 1 an error (Response code : 14) will occur.

Parameter description

Parameter	Description
Page designation	Pages are specified by setting the bits corresponding to pages that are to be read to "1" and setting the other bits to "0", then converting the result to a hexadecimal character string.
Write data	The data to be written to the specified pages is specified in ascending order of page numbers.

Data Segment Area Refer to page 111.

Response

The response code (when normal: 00) is returned.

SOH	Node No.		Response code		FCS		CR
01h			0	0			0Dh

Example: Writing data to pages 8 and 10 of node No.1:

Command

SOH	Node No.		Command code				Page designation								Data of page 8																Data of page 10														FCS		CR
01h	0	1	0	2	0	0	0	0	0	0	0	A	0	0	1	1	2	2	3	3	4	4	5	5	6	6	7	7	8	8	0	1	2	3	4	5	6	7	8	9	A	B	C	D	E	F	7	4	0Dh

Binary notation

0	0	0	0	0	0	0	0	0	0	0	0	0	0	0	0	0	0	0	0	0	1	0	1	0	0	0	0	0	0	0	0	0

Response

SOH	Node No.		Response code		FCS		CR
01h	0	1	0	0	0	1	0Dh

The ID Tag status on normal completion is as shown below:

Page 8	11h	22h	33h	44h	55h	66h	77h	88h
Page 9								
Page 10	01h	23h	45h	67h	89h	ABh	CDh	EFh

■ Same Write

Writes the same data to multiple pages of an ID Tag.
Any page(s) can be specified.

Command

SOH	Node No.		Command code				Page designation (8 characters)								Write data						FCS		CR
															Data 1		· · ·		Data 8				
01h			0	3	0	0																	0DH

Bit	7	-	0	7	-	3	2	1	0	7	6	-	1	0	7	6	-	2	1	0
Page	Sys	-	Sys	Sys	-	Sys	17	16	15	14	13	-	8	7	6	5	-	1	Sys	Sys
Designation	0*	0*		0*	0*	0*	0/1	0/1	0/1	0/1	0/1	•••	0/1	0/1	0/1	0/1	•••	0/1	0*	0*
Value	00			00 - 07						00 - FF					00 - FC					

* Always specify 0. If you specify 1 an error (Response code : 14) will occur.

Parameter description

Parameter	Description
Page designation	Pages are specified by setting the bits corresponding to pages that are to be read to "1" and setting the other bits to "0", then converting the result to a hexadecimal character string.
Write data	Specify the write data.

Data Segment Area Refer to page 111.

Response

The response code (when normal: 00) is returned.

SOH	Node No.		Response code		FCS		CR
01h			0	0			0Dh

Example: Clearing pages 1 to 17 of node No.1 to 0:

Command

SOH	Node No.		Command code				Page designation								Write data																FCS		CR
01h	0	1	0	3	0	0	0	0	0	7	F	F	F	C	0	0	0	0	0	0	0	0	0	0	0	0	0	0	0	0	0	0	0Dh

Binary notation

0	0	0	0	0	0	0	0	0	0	0	0	0	1	1	1	1	1	1	1	1	1	1	1	1	1	1	1	1	1	1	0	0

Response

SOH	Node No.		Response code		FCS		CR
01h	0	1	0	0	0	1	0Dh

■ Byte Write

Writes data to any specified number of bytes starting from the address specified in the ID Tag. The maximum number of bytes that can be written at one time is 128.

Command

SOH	Node No.		Command code				First address		Write data						FCS		CR
									Data 1		•••		Data n				
01h			0	4	0	0											0Dh

* Data number n = number of bytes written to (2-character units)

Parameter description

Parameter	Description
Address designation	Addresses can be specified in the range 00h to 87h.
Write data	Up to 128 bytes of write data, starting from the specified address, can be specified.

Data Segment Area Refer to page 111.

Response

The response code (when normal: 00) is returned.

SOH	Node No.		Response code		FCS		CR
01h			0	0			0Dh

Example: Writing to two bytes starting from address 05h of node No.1:

Command

SOH	Node No.		Command code				First address		Write data				FCS		CR
									Data 1		Data 2				
01h	0	1	0	4	0	0	0	5	1	2	3	4	0	4	0Dh

Response

SOH	Node No.		Response code		FCS		CR
01h	0	1	0	0	0	1	0Dh

The ID Tag status on normal completion is as shown below:

Page 1						12h	34h	
Page 2								

■ TEST

Performs a communication test on communications between the host device and Amplifier Unit. When an Amplifier Unit receives a test command, it sends the response code and command test data to the host device as the response.

Command

SOH	Node No.		Command code		Test data						FCS		CR
					Data 1		•••		Data n				
01h			1	0									0Dh

* Number of data n < 136 (2-character units)

Parameter description

Parameter	Description
Test data	The data to be sent in the test is specified with a hexadecimal value. (Max. 270 characters) However, note that odd numbers of characters cannot be used.

Response

The response code (when normal: 00) and the received test data are returned.

SOH	Node No.		Response code		Test data						FCS		CR
					Data 1		•••		Data n				
01h			0	0									0Dh

Example: Testing by sending the data "12345678" to node No.1:

Command

SOH	Node No.		Command code		Test data								FCS		CR
					Data 1		Data 2		Data 3		Data 4				
01h	0	1	1	0	1	2	3	4	5	6	7	8	0	8	0Dh

Response

SOH	Node No.		Response code		Test data								FCS		CR
					Data 1		Data 2		Data 3		Data 4				
01h	0	1	0	0	1	2	3	4	5	6	7	8	0	9	0Dh

■ NAK

Sends the response made immediately before again.

Command

SOH	Node No.		Command code		FCS		CR
01h			1	2			0Dh

Response

Sends the response made immediately before again.

■ Noise measurement

The levels of noise in the vicinity of the CIDRW Head are measured and the noise level is expressed numerically in the range "00" to "99."

Command

SOH	Node No.		Command code		FCS		CR
01h			4	0			0Dh

Response

The response code (when normal: 00) and the noise level "00" to "99" are returned.

SOH	Node No.		Response code		Noise level		FCS		CR
01h			0	0					0Dh

Influence of background noise on communication distance Refer to page 110.

■ RESET

All Amplifier Unit processing is stopped, and the initial status is re-established.

Command

SOH	Node No.		Command code		FCS		CR
01h			7	F			0Dh

Response

There is no response to this command.

SECTION 5
Troubleshooting

When SECS is Used 84

When SECS is Not Used 90

When SECS is Used

Errors are indicated by the contents of the CIDRW Controller response messages, and by the indicators.

List of Error Messages

When responses are made to messages sent by the CIDRW Controller, errors are expressed by the contents of error messages and the nature of the SSACK response.

S	F	Direction	SECS II names
1	0	S,H←E	Abort Transaction
9	0	S,H→E	Abort Transaction
9	1	S,H←E	Unrecognized Device ID
9	3	S,H←E	Unrecognized Stream Type
9	5	S,H←E	Unrecognized Function Type
9	7	S,H←E	Illegal Data
9	9	S,H←E	Transaction Timer Timeout
9	11	S,H←E	Data Too Long
18	0	S,H←E	Abort Transaction

Controller Indicators

If an error or alarm has occurred at the CIDRW Controller, the LEDs on the front of the Controller light.

Name	Function
OPERATING (green)	Lit when the operation status (status model) of the CIDRW system is "operating."
ALARMS (green)	Lit when the status of "AlamStatus" of the CIDRW system is "Alarm (1)."
BUSY (green)	Lit when the status of "OparationalStatus" of the CIDRW system is "BUSY."
ERROR (red)	When a processing error is detected (when SSACK is other than "NO"), this indicator is lit for 50 ms.

Operation Check Flowchart

■ Normal Operation Mode

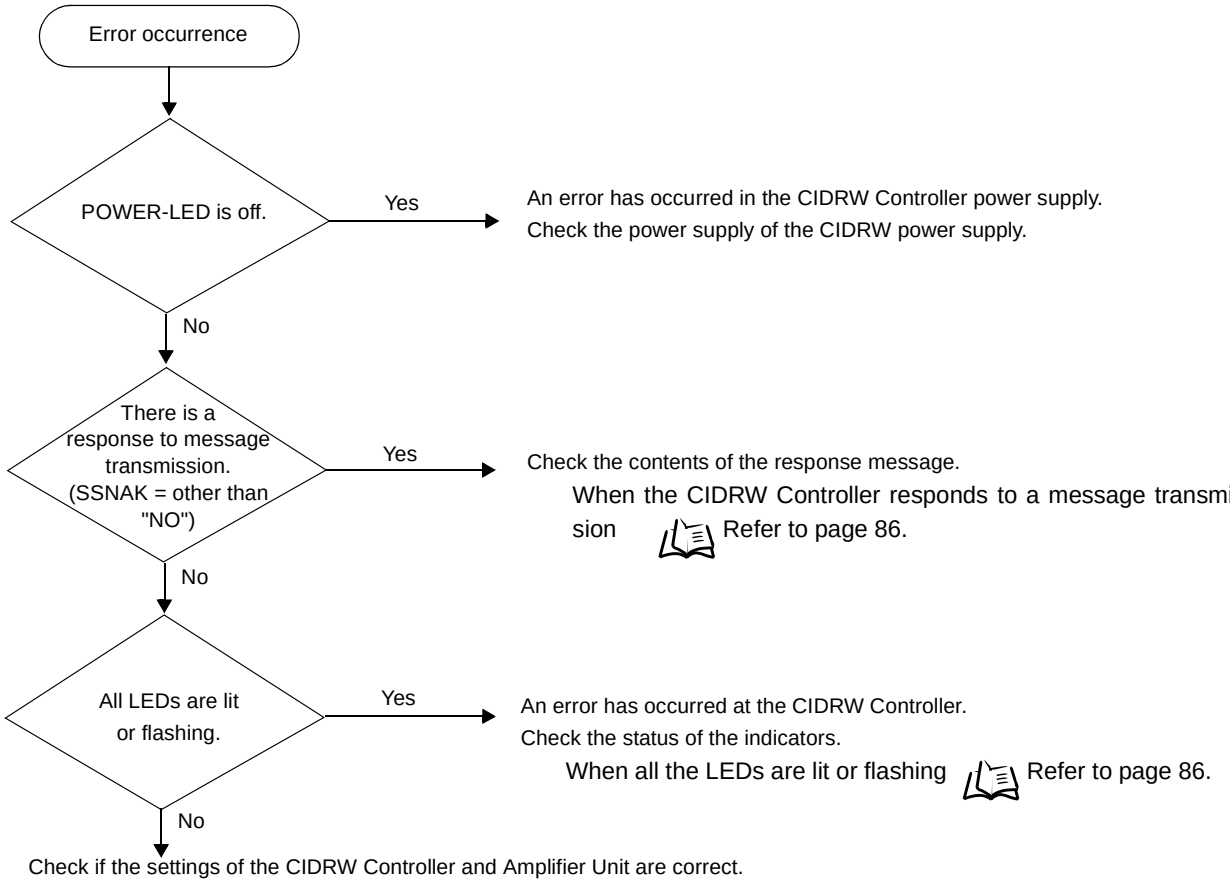

When the CIDRW Controller fails to respond to messages sent to it Refer to page 87.

When an error unrelated to message transmission and responses occurs Refer to page 87.

• Operating normally in the Normal Operation mode

Indicators

POWER	OPERATING	ALARMS	BUSY	ERROR
☼	☼	●	●	●

Response

Response		Function
S	F	
—	—	SSACK="NO"

• When the CIDRW Controller responds to a message transmission

There is a mistake in the message sent to the CIDRW Controller or the Amplifier Unit settings. After taking the appropriate corrective action, restart the Controller and the Amplifier Unit and send the message again.

Response		Main check points	
S	F		
—	0	Status conditions when the message was issued (e.g. a **Write ID Request** message (S18, F11) was sent in the operating mode, or the message was sent during initial processing) Operation Conditions Refer to page 73.	
9	7	Message composition: illegal attributes, insufficient items, etc.	
Other than above		Ascertain the cause from the contents of the SSACK response.	
		CE	• Mistake in the details of the items in the message (The node number of an amplifier that is not set was specified as the "TARGET ID," or a segment name that is not set has been specified for "DATASEG.") • Connection of RS-485 cables between Amplifier Units (failure to detect Amplifier Units) • Amplifier Unit baud rate settings (failure to detect Amplifier Units) • Node numbers of the Amplifier Units (The same number is set for more than one unit, making detection impossible) • Cable routing between the host device and CIDRW Controller (influence of background noise) • Noise levels of the power supply line to the CIDRW Controller
		EE	• Installation distance/inclination between the ID Tag and CIDRW Head • Background noise levels of the CIDRW Head • Installation spacing in relation to CIDRW Heads connected in other CIDRW systems
		HE	• Mistake in the details of the items in the message (A segment that does not match the Amplifier Unit specifications has been set; the response time-out setting is not correct.) • Connection and wiring of cable between CIDRW Controller and Amplifier Unit • Power supply to Amplifier Units • Amplifier Unit terminal resistance settings • Routing of each cable (influence of background noise) • Node numbers of the Amplifier Units (the same number is set for more than one unit) • Amplifier Unit error (hardware error) • Noise levels of the power supply line
		TE	• Type/specifications of the ID Tags used • Settings of the ID Tags used (lock, etc.) • Environment of use of the ID Tags (ID Tag breakage due to use in unanticipated ways) • ID Tag overwrite life

• When all the LEDs are lit or flashing

An error has occurred in the CIDRW Controller.

After taking the appropriate corrective action, restart the CIDRW Controller.

POWER	OPERATING	ALARMS	BUSY	ERROR	Main check points
●	●	●	●	●	• Supply of 24 VDC power
○	○	○	○	○	• The CIDRW Controller may be damaged.
○	◐	◐	◐	◐	• Mode switch setting (Is the setting "0"?) If the error cannot be resolved after checking, the CIDRW Controller may be damaged.
○	○	◐	◐	◐	• The CIDRW Controller may be damaged.

- When the CIDRW Controller fails to respond to messages sent to it

There is a mistake in the CIDRW Controller or Amplifier Unit settings.
After taking the appropriate corrective action, restart the CIDRW Controller and Amplifier Unit.

POWER	OPERATING	ALARMS	BUSY	ERROR	Main check points
○	●	●	●	●	• Mode switch setting (Is the setting "0"?) • Cable wiring between the CIDRW Controller and host device
○	●	●	●	○	
○	◐	○	○	●	
○	○	●	●	●	• Communications conditions for communication between the CIDRW Controller and host device (baud rate, character composition, etc.) • Cable wiring between the CIDRW Controller and host device
○	●	●	○	●	• Node numbers of the Amplifier Units (The same number is set for more than one unit.)

- When an error unrelated to message transmission and responses occurs

There is a mistake in the settings of the CIDRW Controller and Amplifier Unit.
After taking the appropriate corrective action, restart the CIDRW Controller and Amplifier Unit.

POWER	OPERATING	ALARMS	BUSY	ERROR	Main check points
○	○	○	●	●	• Mode switch setting (Is the setting "0"?) • Amplifier Unit baud rate settings • Node numbers of the Amplifier Units (The same number is set for more than one unit.) • Connection and wiring of cable between CIDRW Controller and Amplifier Unit • Amplifier Unit error (hardware error) • Routing of each cable (influence of background noise)

■ Setting Mode

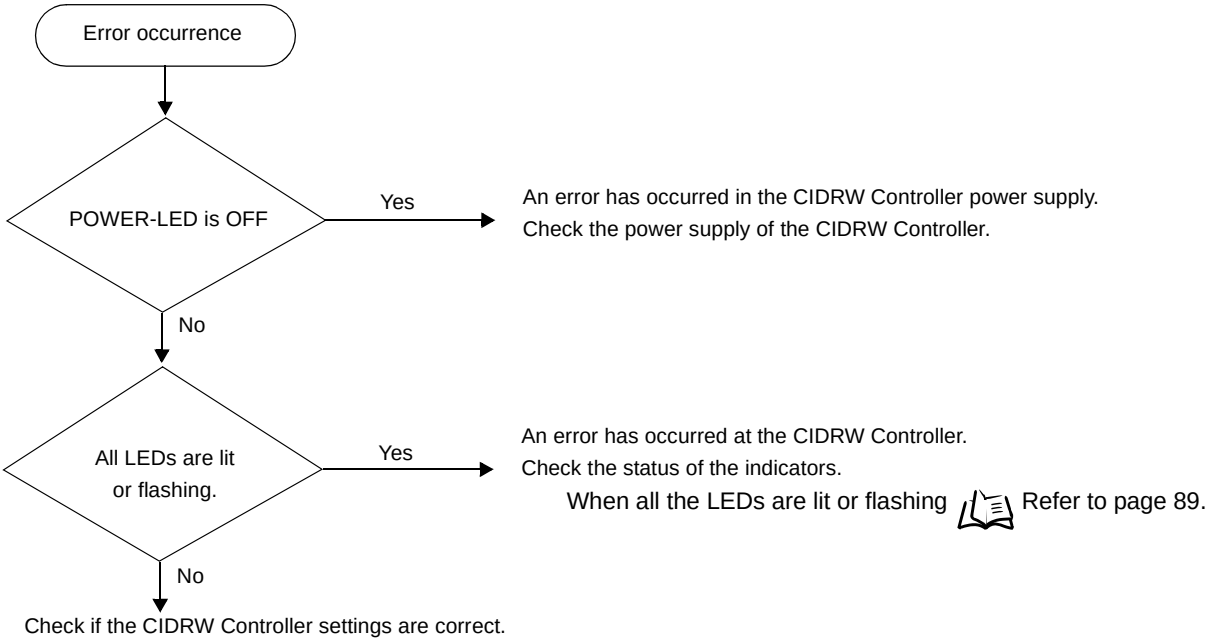

When the CIDRW Controller fails to respond to messages sent to it Refer to page 89.

When an error unrelated to message transmission and responses occurs Refer to page 89.

• Operating normally in the Setting mode

Indicators

POWER	OPERATING	ALARMS	BUSY	ERROR
☼	◐	☼	☼	●

Terminal initial screen of the host device after startup in the Setting mode

```
SETUP_START  <L21   ><XXX.XX, YYY.YY>
_
```

Model number
Software Revision Level
Hardware Revision Level

Terminal screen when parameter setting has been completed without error

```
SETUP_COMPLETE
_
```

- When all the LEDs are lit or flashing

An error has occurred in the CIDRW Controller. After taking appropriate corrective action, restart the CIDRW Controller and check the indicators.

POWER	OPERATING	ALARMS	BUSY	ERROR	Main check points
●	●	●	●	●	• Supply of 24 VDC power
○	○	○	○	○	• The CIDRW Controller may be damaged.
○	◐	◐	◐	◐	• Mode switch setting (Is the setting "3"?) If the error cannot be resolved after checking, the CIDRW Controller may be damaged.
○	○	◐	◐	◐	• The CIDRW Controller may be damaged.

- When the CIDRW Controller responds to a message transmission

There is a mistake in the CIDRW Controller settings or the sent parameters. After taking appropriate corrective action, restart the CIDRW Controller and check the indicators.

POWER	OPERATING	ALARMS	BUSY	ERROR	Main check points
○	◐	○	○	○	• Sent parameters (Are the parameters correct? Are the settings correct?)

Response	Contents
SETUP_FAILED [□]	The parameters are not updated. The figure in square brackets [ ] indicates the line number where the error was first detected. If a parity error is detected in the received characters, this figure is [0].

- When the CIDRW Controller fails to respond to messages sent to it

There is a mistake in the CIDRW Controller settings or the sent parameters. After taking appropriate corrective action, restart the CIDRW Controller and check the indicators.

POWER	OPERATING	ALARMS	BUSY	ERROR	Main check points
○	◐	◐	○	●	• Transmission parameters (Are the parameters correct?) • Communications conditions for communication between the CIDRW Controller and the host device (baud rate, character composition, etc.)
○	○	●	●	●	• Mode switch setting (Is the setting "3"?)

- When an error unrelated to message transmission and responses occurs

There is a mistake in the settings of the CIDRW Controller or Amplifier Unit. After taking appropriate corrective action, restart the CIDRW Controller and Amplifier Unit and check the indicators.

POWER	OPERATING	ALARMS	BUSY	ERROR	Main check points
○	○	○	●	●	• Mode switch setting (Is the setting "3"?)

When SECS is Not Used

Errors are indicated by the presence or absence of a response to an Amplifier Unit command, and by the indicators.

List of Error Messages

Type	Response code	Name	Description
Host communications error	14	Format error	There is a mistake in the command format. (E.g. the command portion is undefined, or the page or address specification is inappropriate.)
Communications error between the CIDRW Head and ID Tag	70	Communications error	Noise or another hindrance has occurred during communication with an ID Tag, and communications cannot be completed normally.
	71	Verification error	Correct data cannot be written to an ID Tag.
	72	No Tag error	Either there is no ID Tag in front of the CIDRW Head, or the CIDRW Head is unable to detect the ID Tag due to environmental factors (e.g. noise).
	7B	Outside write area error	The ID Tag is at a position where reading is possible but writing is not, so writing does not complete normally.
	7E	ID system error (1)	The ID Tag is in a status where it cannot execute the command processing.
	7F	ID system error (2)	An inapplicable ID Tag has been used.

Amplifier Unit Indicators

Name	Indications
RUN (green)	Turns ON when the Amplifier Unit is in normal operation.
COMM (orange)	Turns ON during communications with the host device or during communications with an ID Tag.
NORM (green)	Turns On when the communications finish with no error.
ERROR (red)	Turns ON when an error occurs during communication with the host device, or during communication with an ID Tag.

Operation Check Flowchart

■ From Installation to Trial Operation

Errors are indicated by whether or not a response to the test command is received and by the status of the Amplifier Unit indicators.

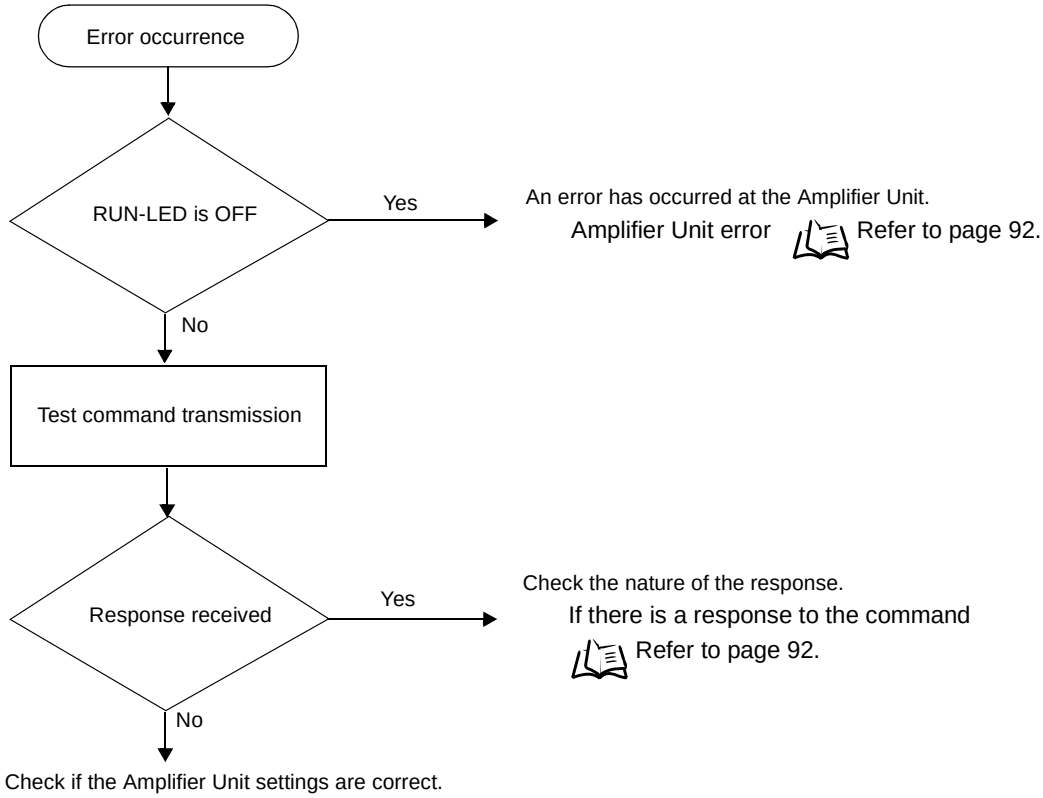

• If the test command was received normally:

Indicators

RUN	COMM	NORM	ERROR
☼	☼ (Lights once)	●	●

Response code for the response

Type	Response code	Function
Normal	00	The command was received normally.

- Amplifier Unit error

Check the status of the indicator LEDs after transmission of the test command.

After taking appropriate corrective action, restart the Amplifier Unit, send the test command again and check again.

RUN	COMM	NORM	ERROR	Main check points
●	— (If RUN is OFF, the status of the other indicator LEDs can be ignored.)			• Influence of background noise (change installation position) • Amplifier Unit power supply If the error cannot be resolved after checking, the Amplifier Unit may be damaged.

- If there is no response to the command:

Check the status of the indicator LEDs after transmission of the test command.

After taking appropriate corrective action, restart the Amplifier Unit, send the test command again and check again.

RUN	COMM	NORM	ERROR	Main check points
○	●	●	●	• Amplifier Unit baud rate settings • Node numbers of the Amplifier Units (do not match the node number in the test command) • Connection and wiring of the cable between the host device and Amplifier Unit • OFF timing of the RS signals between the host device and Amplifier Unit • Routing of each cable (influence of background noise) If the error cannot be resolved after checking, the Amplifier Unit may be damaged.
○	●	●	○ (Lights once)	• Amplifier Unit baud rate settings • Connection and wiring of the cable between the host device and Amplifier Unit • Routing of the cables (influence of background noise) • OFF timing of the RS signals between the host device and Amplifier Unit • FCS (frame check sequence) calculation method

CHECK!

Method using RS signal control at the host device

In a 1:N connection using Link Units, the RS signals generated from the host device by normal control must be input as CS signals. Turn the RS signals OFF within 15 ms after the completion of data transmission. Correct communications will not be possible without this control.

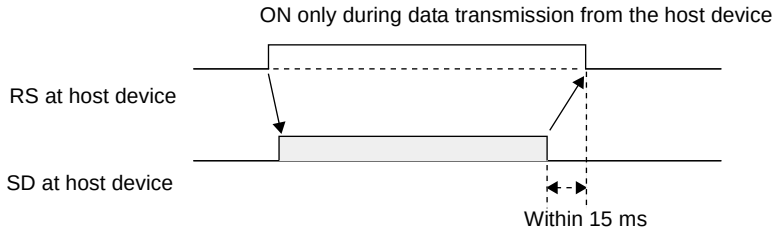

- If there is a response to the command:

Check the status of the indicator LEDs after transmission of the test command.

After taking appropriate corrective action, restart the Amplifier Unit, send the test command again and check again.

RUN	COMM	NORM	ERROR	Main check points
○	◐	●	◐	• Node numbers of the Amplifier Units (The same number is set for more than one unit) If the error cannot be resolved after checking, the Amplifier Unit may be damaged.
○	●	●	○ (Lights once)	There is a mistake in the command format (number of characters, character code, etc.).

■ From Trial Operation to Communications

Errors are indicated by the status of the indicators after transmission of the write command, and by the response code of the response.

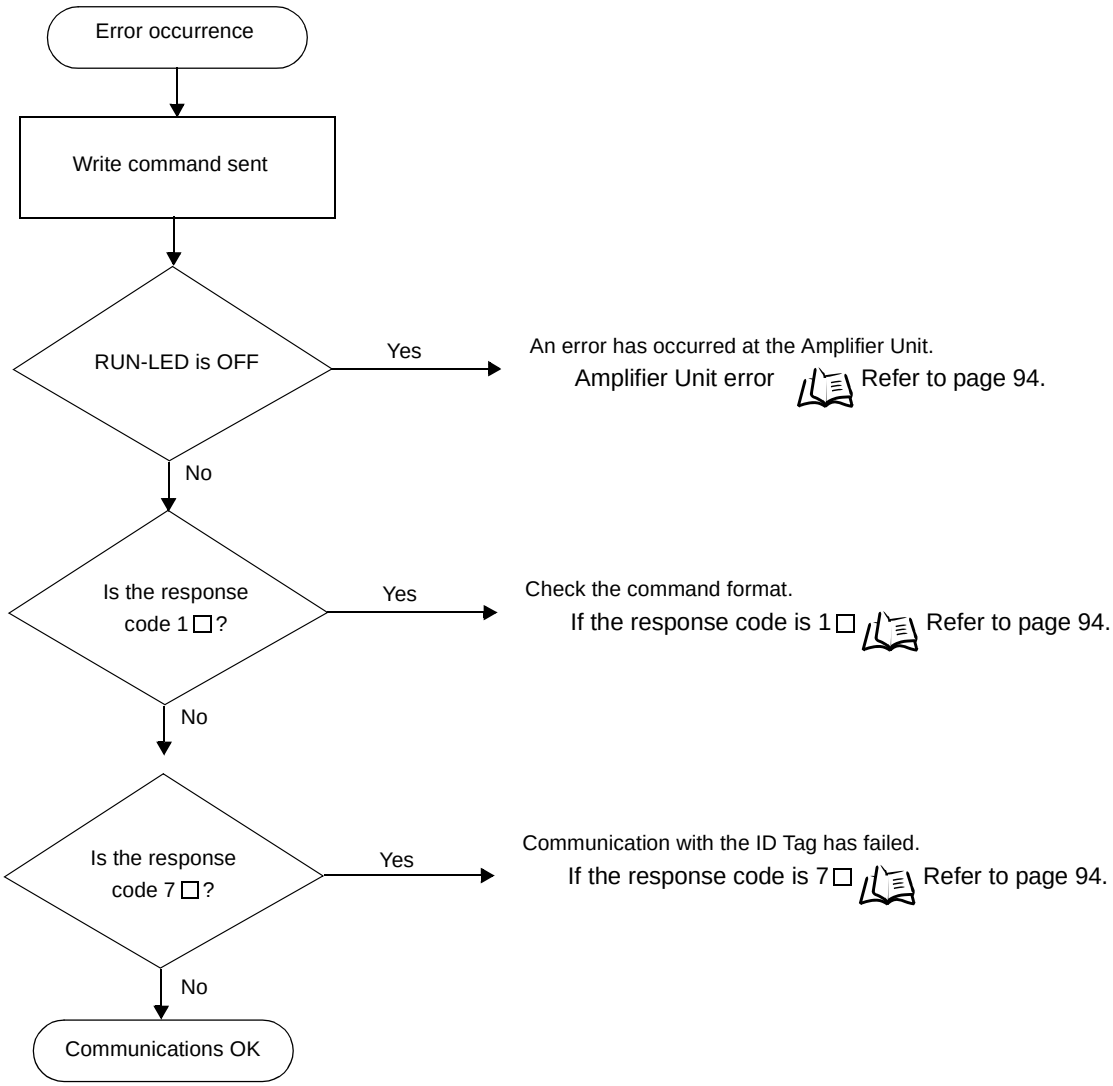

- If the ID Tag was processed normally:

Indicators

RUN	COMM	NORM	ERROR
☼	☼ (Lights once)	☼ (Lights once)	●

Response code for the response

Type	Response code	Function
Normal	00	The ID Tag was processed normally.

CHECK!

If there is no response to the write command, refer to the *From Installation to Trial Operation*, *Operation Check Flowchart*. Refer to page 91.

- Amplifier Unit error

Check the status of the indicator LEDs after transmission of the command.
After taking appropriate corrective action, send the write command again and check again.

RUN	COMM	NORM	ERROR	Main check points
●	— (If RUN is OFF, the status of the other indicator LEDs can be ignored.)			• Influence of background noise (Change installation position) • Amplifier Unit power supply If the error cannot be resolved by checking the two points above, the Amplifier Unit may be damaged.

- If the response code is 1□:

There is a host device communications error.
Check the status of the indicator LEDs and the response code of the response after transmission of the command.
After taking appropriate corrective action, send the write command again and check again.

RUN	COMM	NORM	ERROR
☼	●	●	☼ (Lights once)

Response code	Main check points
14	Command format (Command code, page designation, address designation, processed data volume, etc.)

- If the response code is 7□:

There is a communications error in communication between the CIDRW Head and ID Tag.
Check the status of the indicator LEDs and the response code of the response after transmission of the command.
After taking appropriate corrective action, send the write command again and check again.

RUN	COMM	NORM	ERROR
☼	☼ (Lights once)	●	☼ (Lights once)

Response code	Main check points
70	• Background noise levels of the CIDRW Head (Check the surroundings with the environmental noise level measurement function) • Distance to another CIDRW Head • Influence of background noise (Change installation position) If the error cannot be resolved after checking, the Amplifier Unit may be damaged.
71	• ID Tag overwrite life (Replace the ID Tag) • Environment of use of the ID Tags (ID Tag breakage due to use in unanticipated ways)
72	• Connection to the CIDRW Head • Distance between the ID Tag and CIDRW Head • CIDRW Head background noise levels (Check the surroundings with the environmental noise level measurement function) • Distance to another CIDRW Head
7B	• Distance between the ID Tag and CIDRW Head • Background noise levels of the CIDRW Head (Check the surroundings with the environmental noise level measurement function) • Distance to another CIDRW Head • Influence of background noise (Change installation position)
7E 7F	• Type/specifications of the ID Tags used • Settings of the ID Tags used (The ID Tag lock function is used.*) • Environment of use of the ID Tags (ID Tag breakage due to use in unanticipated ways)

* The ID Tag has a lock function, but the amplifier unit has no function for locking an ID Tag.

SECTION 6
Appendix

Specifications and Dimensions	96
System Configuration Examples	100
When SECS is Not Used	101
Data Segment Area	111
Regular Inspection	112
SECS Protocol Specifications	113
ASCII Code Table	118
Protective Construction	119

Specifications and Dimensions

Controller
V700-L21

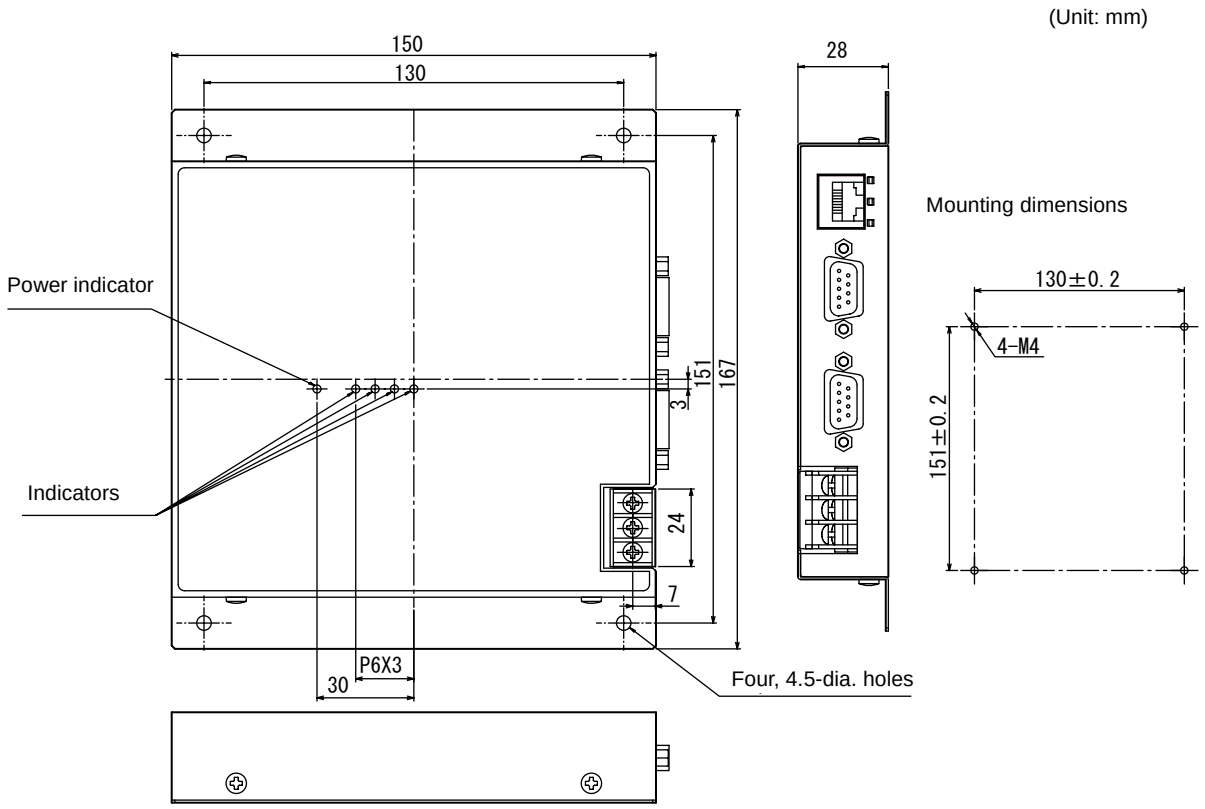

Item	Specifications
Power supply voltage	24 VDC +10% -15%
Current consumption	150 mA max. (inrush current: approx. 10 A max.)
Ambient temperature	Operating: 0 to +40°C Storage: -15 to +65°C (with no icing)
Ambient humidity	Operating: 10 to 85% RH Storage: 10 to 95% RH (with no condensation)
Degree of protection	IP20 (IEC60529)
Insulation resistance	50 MΩ min. between power supply terminals and the frame ground terminal (500 VDC M)
Dielectric strength	Leak current not to exceed 3.5 mA on application of 500 VAC (50/60 Hz for 1 minute) between both power supply terminals and the frame ground terminal
Vibration resistance	Frequency: 10 to 150 Hz; double amplitude: 0.20 mm; acceleration: 15 m/s^2 for 8 minutes, 10 times each in X, Y, and Z directions
Shock resistance	Shock of 150 m/s^2 in X, Y, and Z directions, 3 times each for 18 repetitions
Ground	Ground to 100 Ω or less.
Case material	SECC (coating)
Weight	Approx. 570 g

Amplifier Unit
V640-HAM11

(Unit: mm)

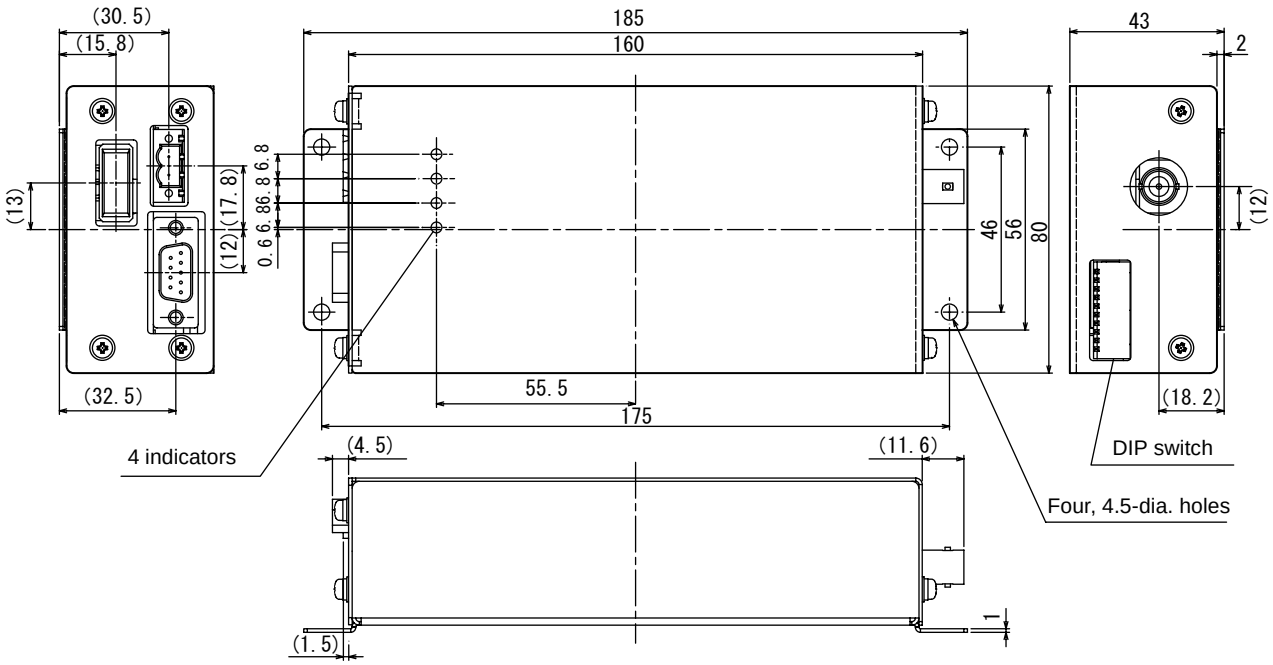

Mounting dimensions

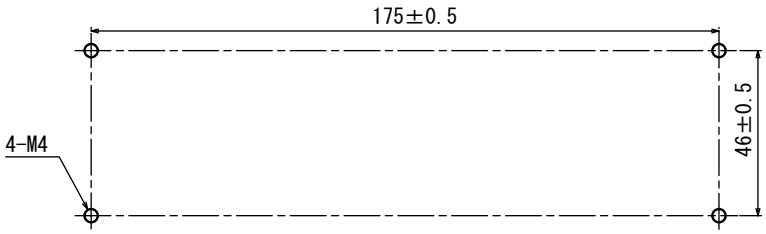

Item	Specifications
Power supply voltage	24 VDC +10% -15%
Current consumption	150 mA max.
Ambient temperature	Operating: 0 to +40°C Storage: -15 to +65°C (with no icing)
Ambient humidity	Operating/Storage: 35 to 85% RH (with no condensation)
Degree of protection	IP20 (IEC60529 standard)
Insulation resistance	20 MΩ min. between power supply terminals and the frame ground terminal (100 VDC M)
Dielectric strength	Leak current not to exceed 5 mA on application of 1000 VAC (50/60 Hz for 1 minute) between both power supply terminals and the frame ground terminal
Vibration resistance	Frequency: 10 to 150 Hz; double amplitude: 0.20 mm; acceleration: 15 m/s^2 for 8 minutes, 10 times each in X, Y, and Z directions
Shock resistance	Shock of 150 m/s^2 in X, Y, and Z directions, 3 times each for 18 repetitions
Ground	Ground to 100 Ω or less.
Case material	SECC (coating)
Weight	Approx. 500 g

CIDRW Head
V640-HS61

(Unit: mm)

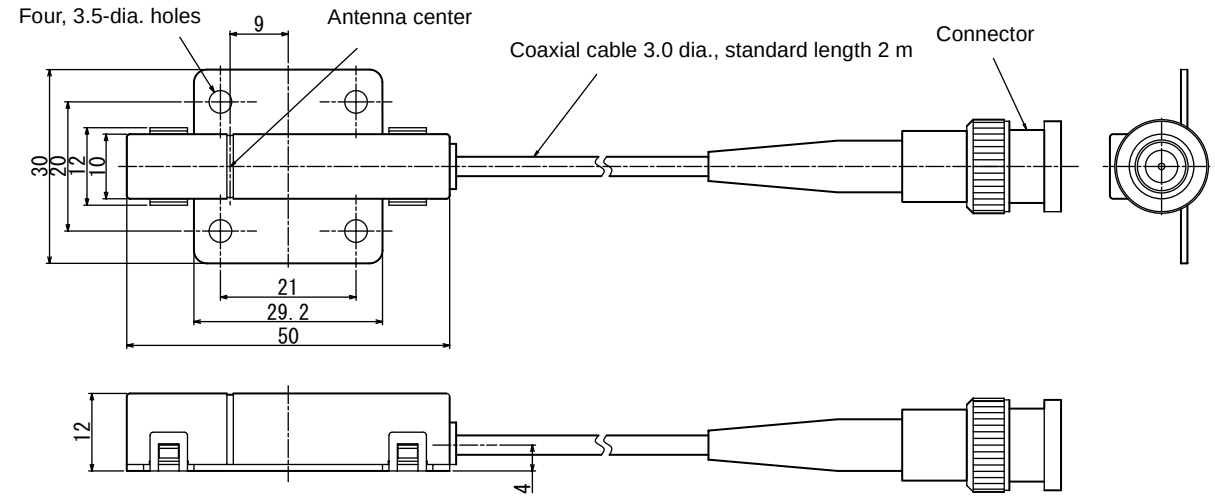

Mounting dimensions

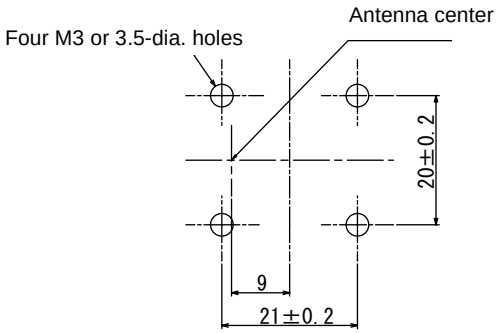

Item	Specifications
Transmission frequency	134 kHz
Ambient temperature	Operating: 0 to +40°C Storage: -15 to +65°C (with no icing)
Ambient humidity	Operating/Storage: 35 to 85% RH (with no condensation)
Degree of protection	IP60 (IEC60529)
Insulation resistance	20 MΩ min. between all terminals and the case (100 VDC M)
Dielectric strength	Leak current not to exceed 5 mA on application of 1000 VAC (50/60 Hz for 1 minute) between all terminals and the case
Vibration resistance	Frequency: 10 to 150 Hz; double amplitude: 0.20 mm; acceleration: 15 m/s^2 for 8 minutes, 10 times each in X, Y, and Z directions
Shock resistance	Shock of 150 m/s^2 in X, Y, and Z directions, 3 times each for 18 repetitions
Casing material	ABS/epoxy resin Stainless steel mount
Weight	Approx. 70 g
Cable length	2 m
Cable specification	3-mm-dia. coaxial cable (no flexibility)

Link Unit
V700-L11

(Unit: mm)

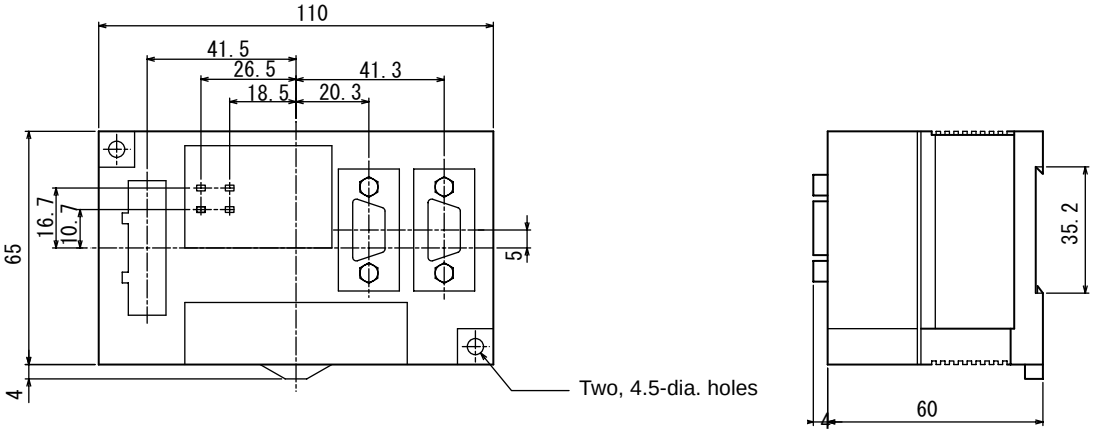

Mounting dimensions

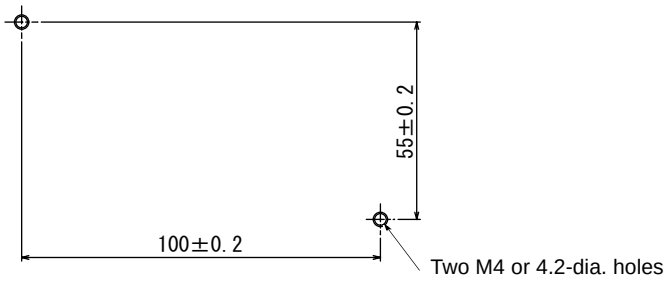

Item	Specifications
Power supply voltage	24 VDC +10% -15%
Current consumption	250 mA max. (inrush current: approx. 10 A)
Ambient temperature	Operating: 0 to +40°C Storage: -15 to +50°C (with no icing)
Ambient humidity	Operating/Storage: 35 to 85% RH (with no condensation)
Degree of protection	IP20 (IEC60529)
Insulation resistance	50 MΩ min. between power supply terminals and the frame ground terminal (500 VDC M)
Dielectric strength	Leak current not to exceed 5 mA on application of 1000 VAC (50/60 Hz for 1 minute) between power supply terminals and the frame ground terminal
Vibration resistance	Frequency: 10 to 150 Hz; double amplitude: 0.20 mm; acceleration: 15 m/s^2 for 8 minutes, 10 times each in X, Y, and Z directions
Shock resistance	Shock of 150 m/s^2 in X, Y, and Z directions, 3 times each for 18 repetitions
Ground	Ground to 100 Ω or less.
Case material	PC/ABS resin
Weight	Approx. 200 g

System Configuration Examples

When SECS is Used

Communication with the host device is possible using the SECS protocol.

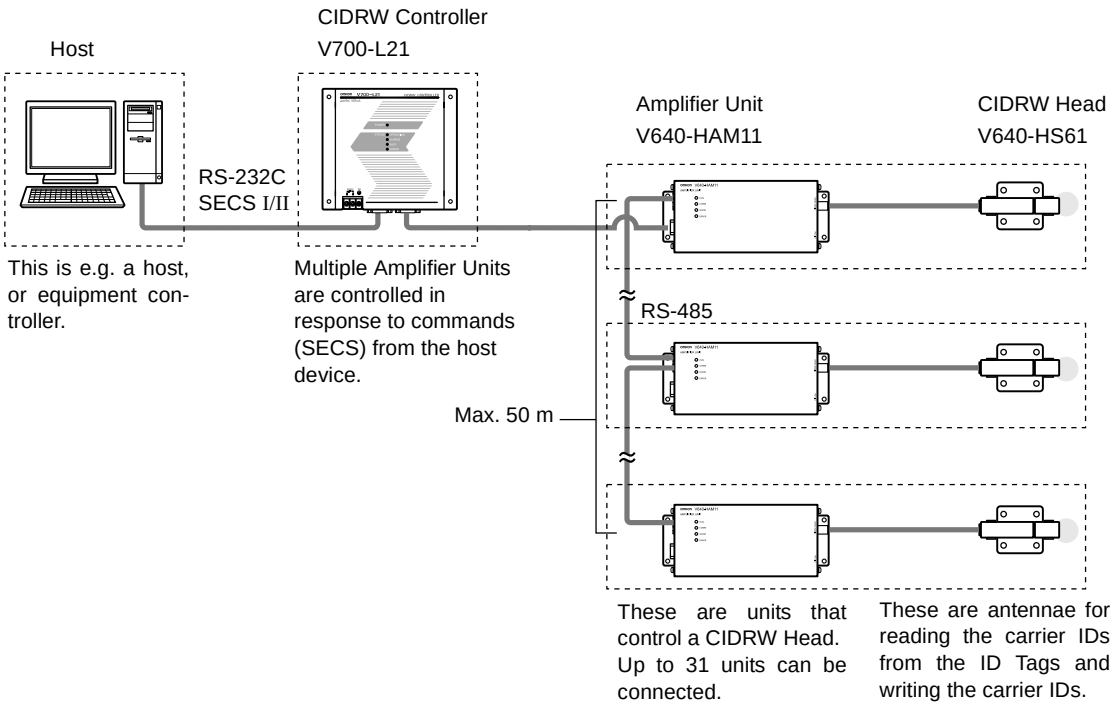

Using Link Units to make connections makes it possible to remove and replace just the relevant Amplifier Unit while leaving the power to the CIDRW system on in the event of a failure or during maintenance.

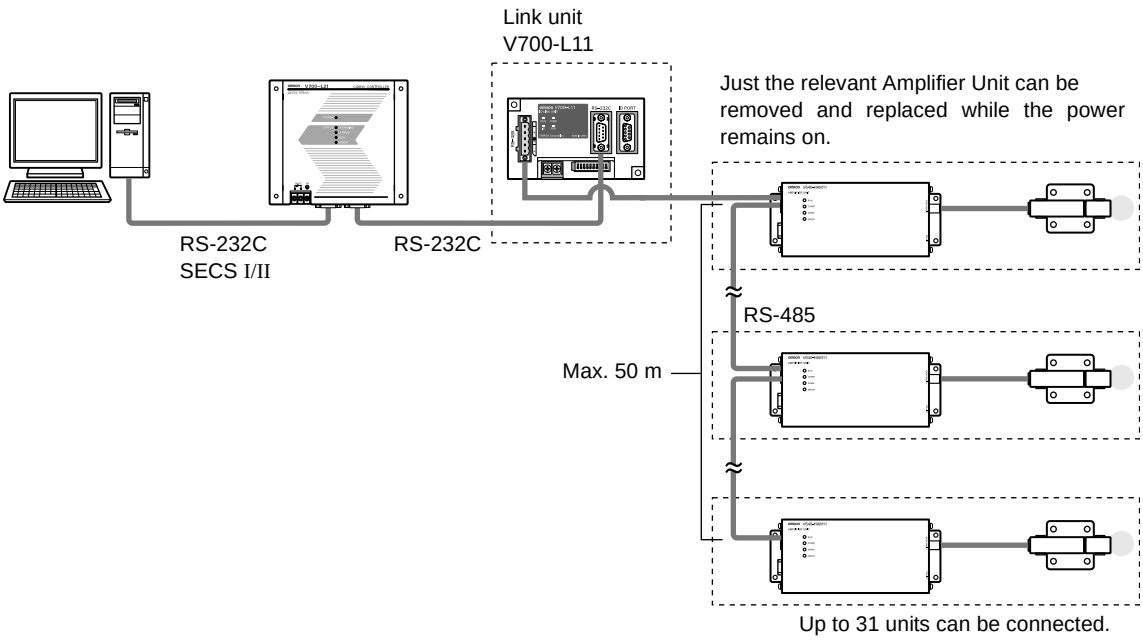

When SECS is Not Used

Communications with the host device follow the OMRON proprietary protocol.
The Amplifier Units are connected directly to the host device without using a CIDRW Controller.

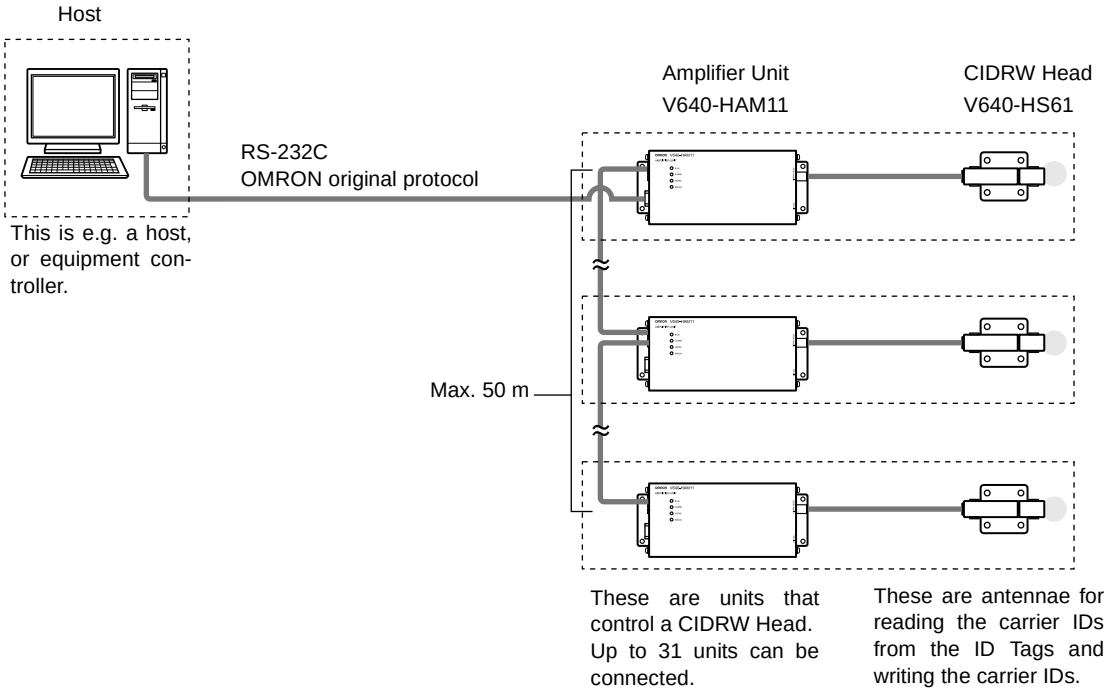

Using Link Units to make connections makes it possible to remove and replace just the relevant Amplifier Unit while leaving the power to the CIDRW system on in the event of a failure or during maintenance.

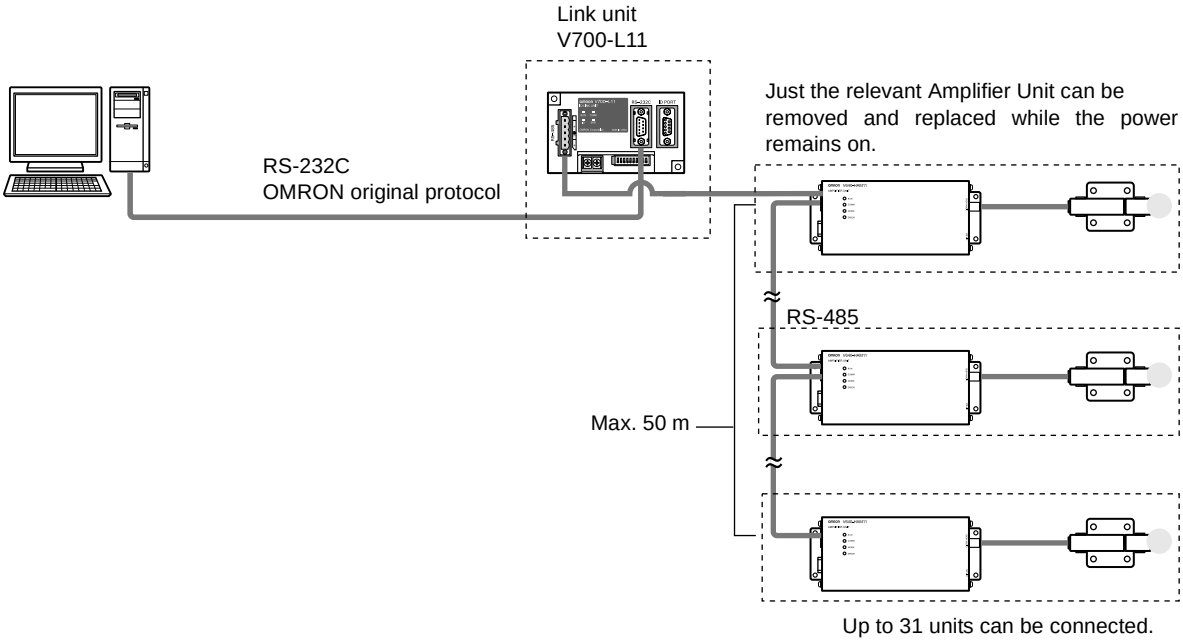

Characteristic Data depending on Conditions of Use

Maps of Communications Areas (Reference Only)

■ Coaxial Mounting

• READ

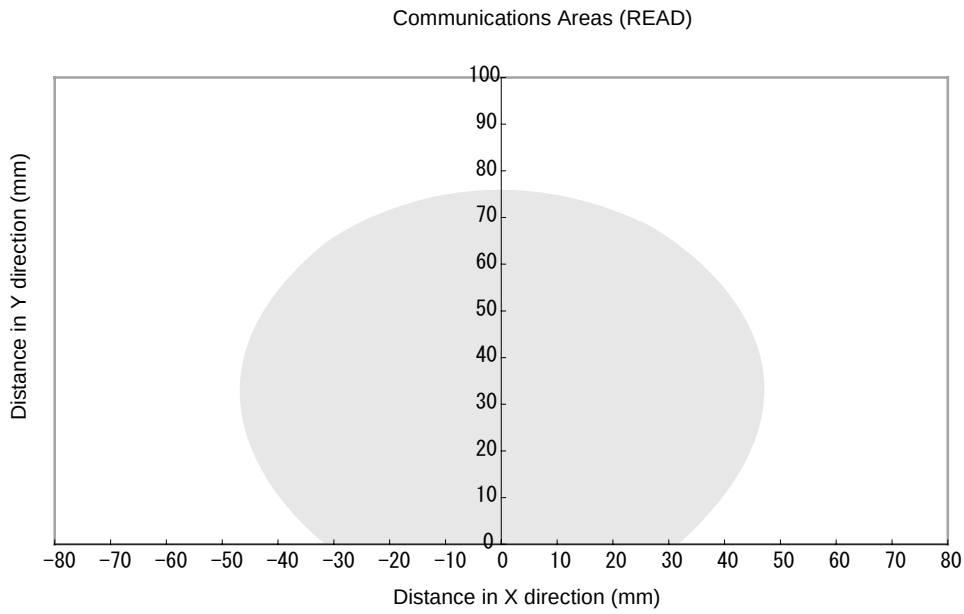

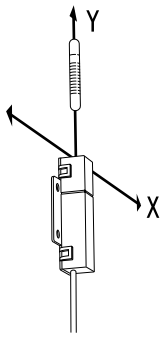

• WRITE

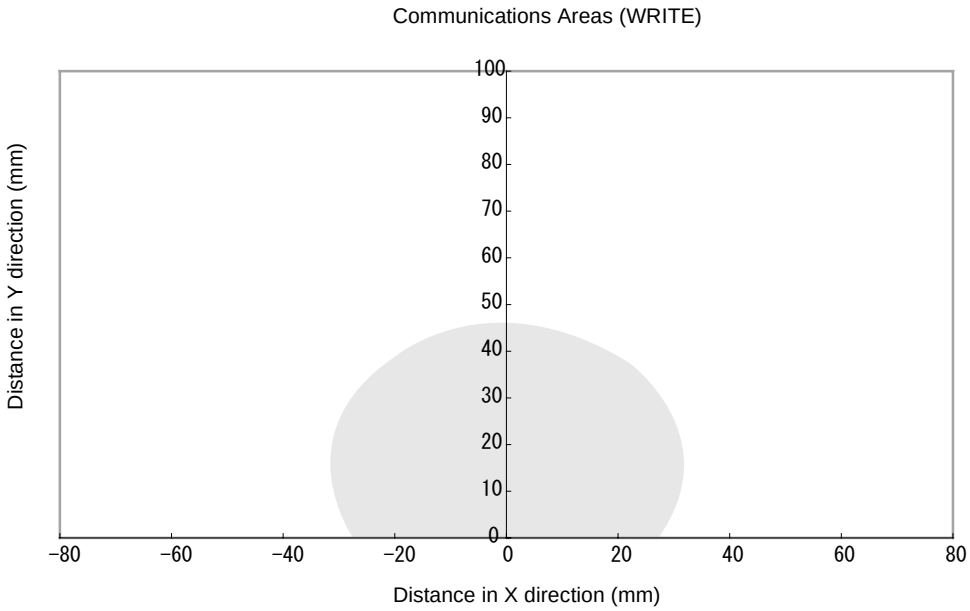

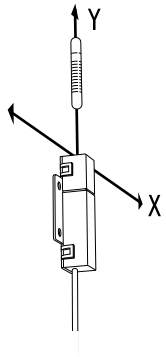

■ Parallel Mounting

• READ

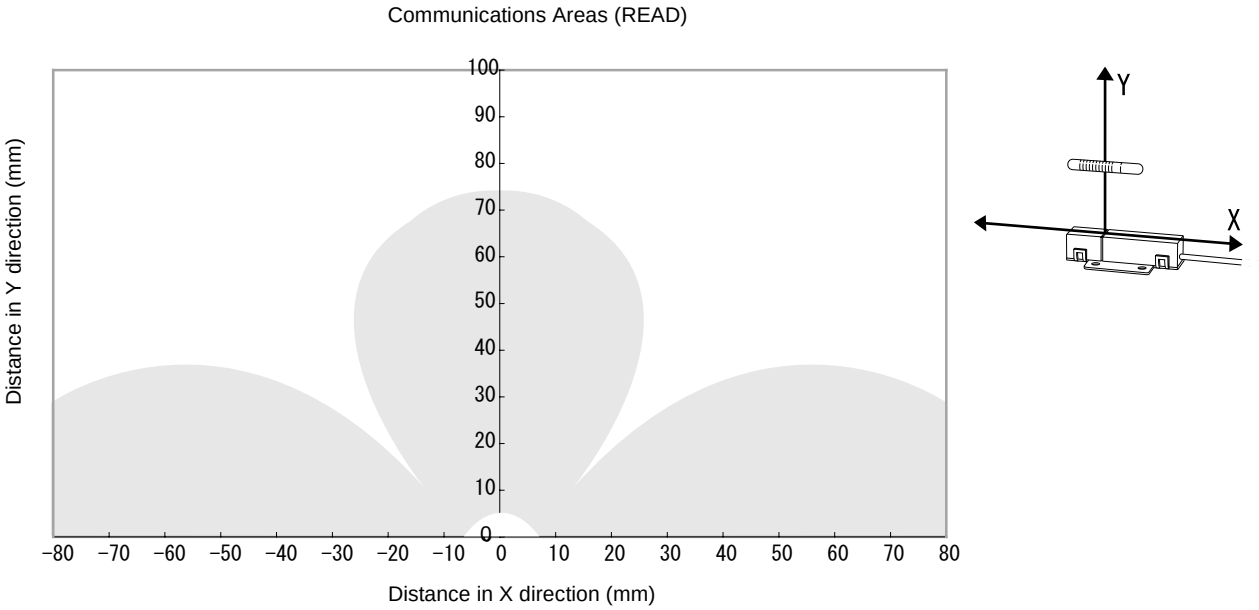

• WRITE

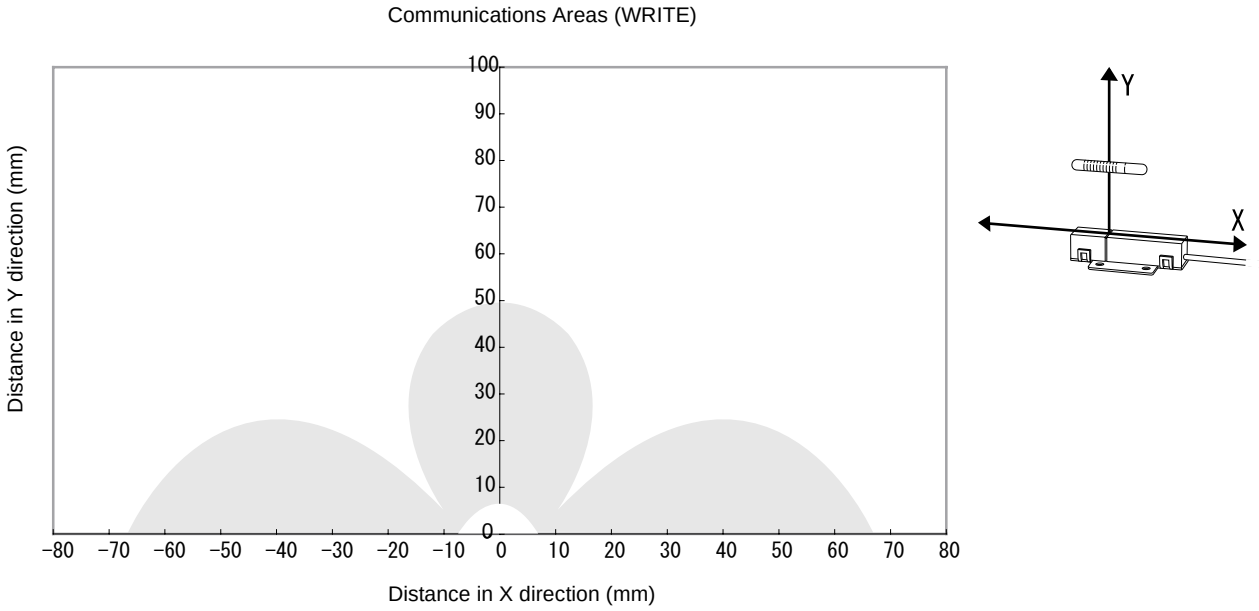

■ Vertical Mounting

• READ

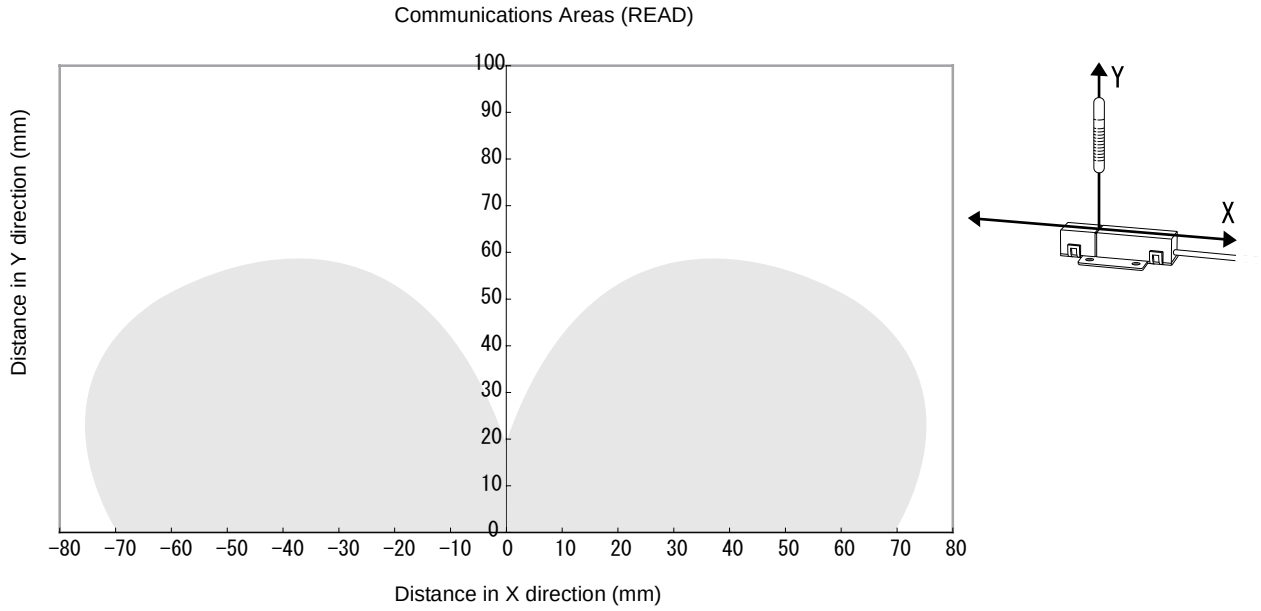

• WRITE

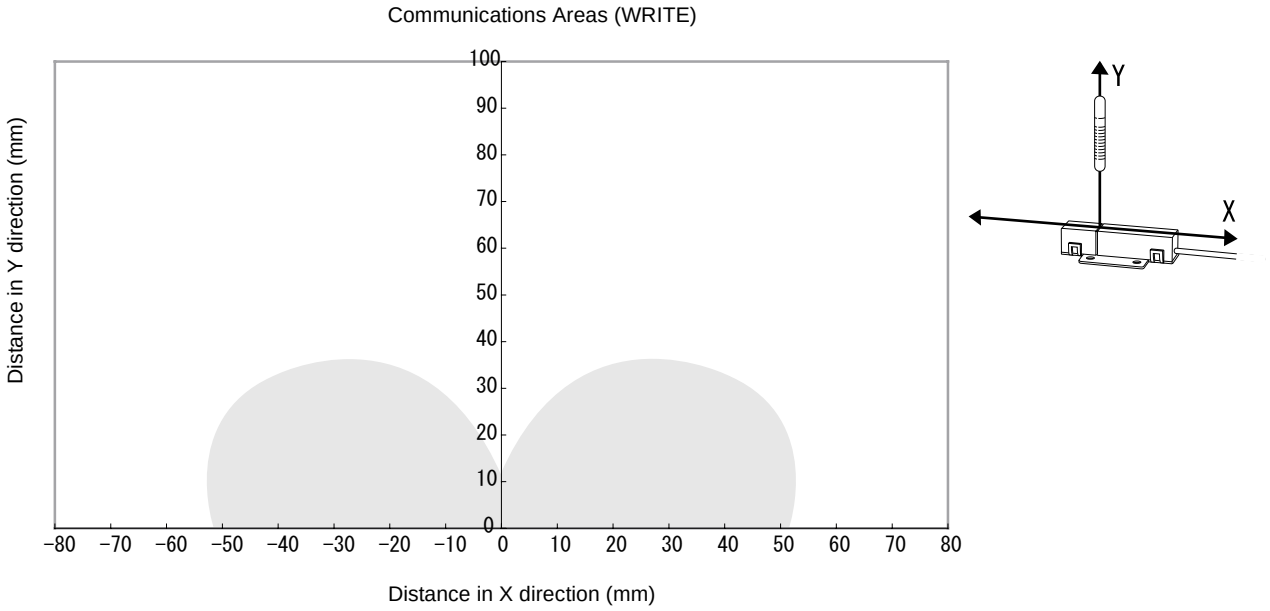

Mutual Interference Distances (Reference Only)

In order to prevent malfunction due to mutual interference when multiple CIDRW Heads are used, install the heads with the spacing indicated below.

■ For Coaxial Installation:

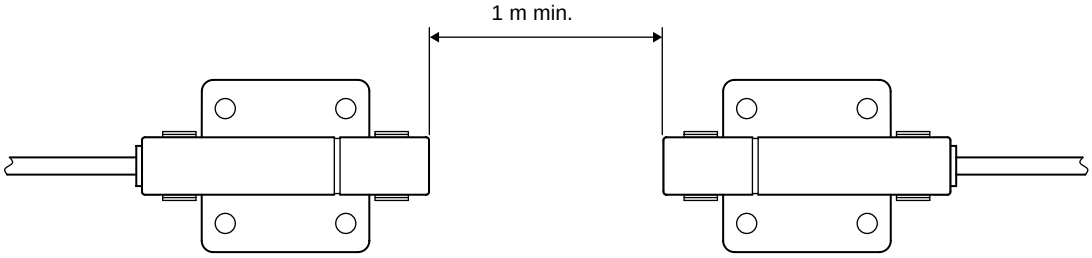

■ For Parallel Installation:

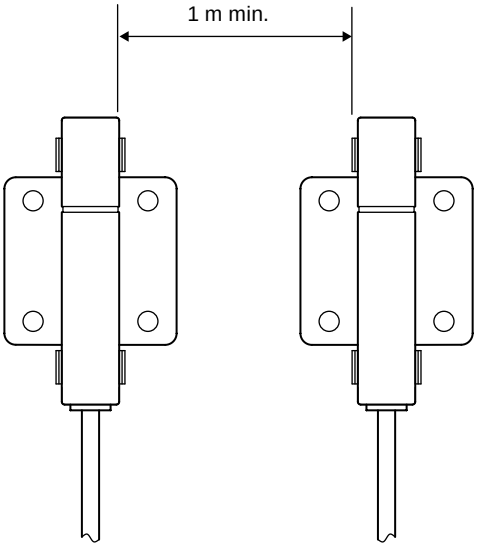

■ For Face-to-Face Installation:

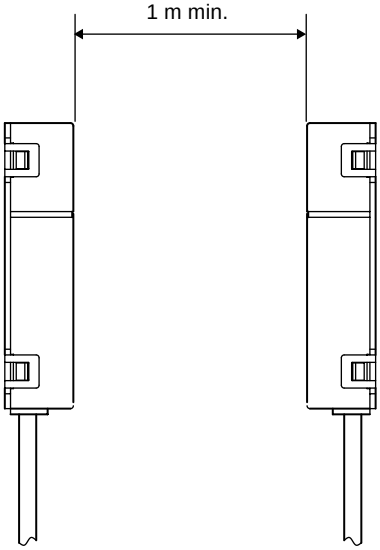

Influence of Background Metals (Reference Only)

The CIDRW Head can also communicate from an opening in a ceiling panel (metal body).

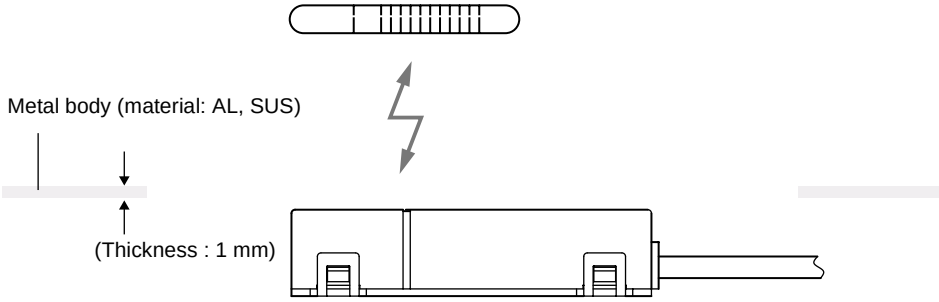

However, ensure the distances indicated below between the CIDRW Head and the metal body. If you do not ensure these distances the communications distance will be substantially shortened.

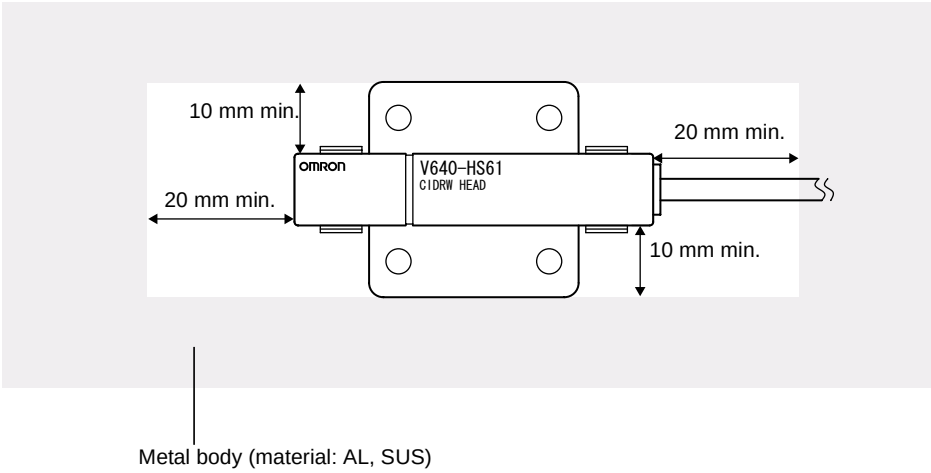

Communications Time

Regardless of whether SECS is used or not, take the time required for processing between the host device and Amplifier Units into account when designing the system.

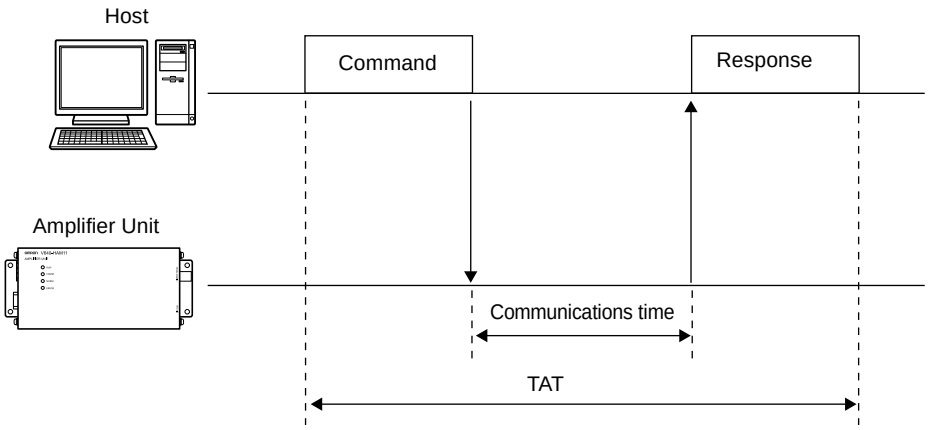

Time	Description
Communications time	This is the time required for communication between an ID Tag and the CIDRW Head.
TAT	This is the time required for processing at the Amplifier Unit, seen from the host device.

Communication time calculation formula (unit: ms)

Read: 150.5 × (number of pages) + 6.1

For write, same writing: 468.6 × (number of pages) + 80.3

Byte write: 468.6 × (number of pages/8) + 229.9

Rounding up

TAT calculation formula (units: ms)

TAT = command and response transmission time + communication time

The command and response transmission time differs depending on the number of characters sent and the communications conditions.

$$\text{Transmission time (ms)} = \frac{\text{Number of bits per character (bits)}}{\text{Baud rate (bps)}} \times \text{total number of characters of command and response}$$

This calculation applies to continuous transmission in which the Controller uses no spaces between command characters.

Example of TAT calculation:

Number of command characters: A; number of response characters: B

Baud rate: 9600 bps, data length: 8 bits, non parity, 1 stop bit

$$\text{TAT (ms)} = \frac{10}{9600} \times (A + B) + \text{Communications time (ms)}$$

The graph for communications time for communication between the ID Tag and CIDRW Head, and TAT (when the baud rate is 9600 bps), is shown below.
Note however that the communications time and TAT may increase substantially according to the conditions of use.

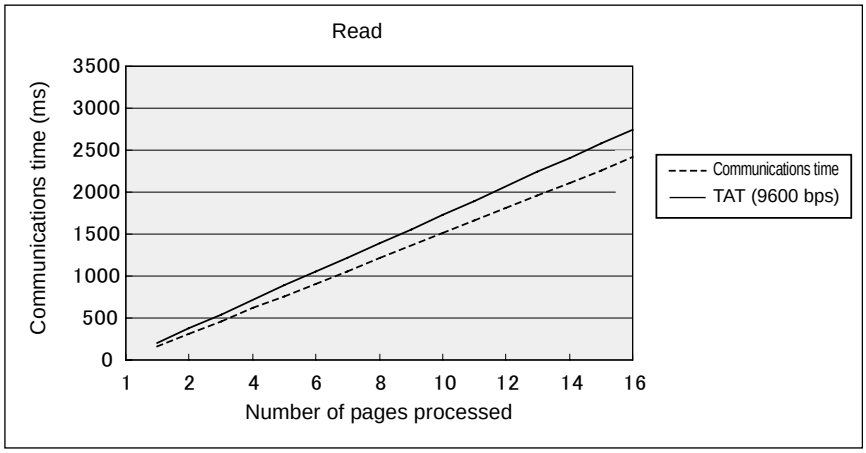

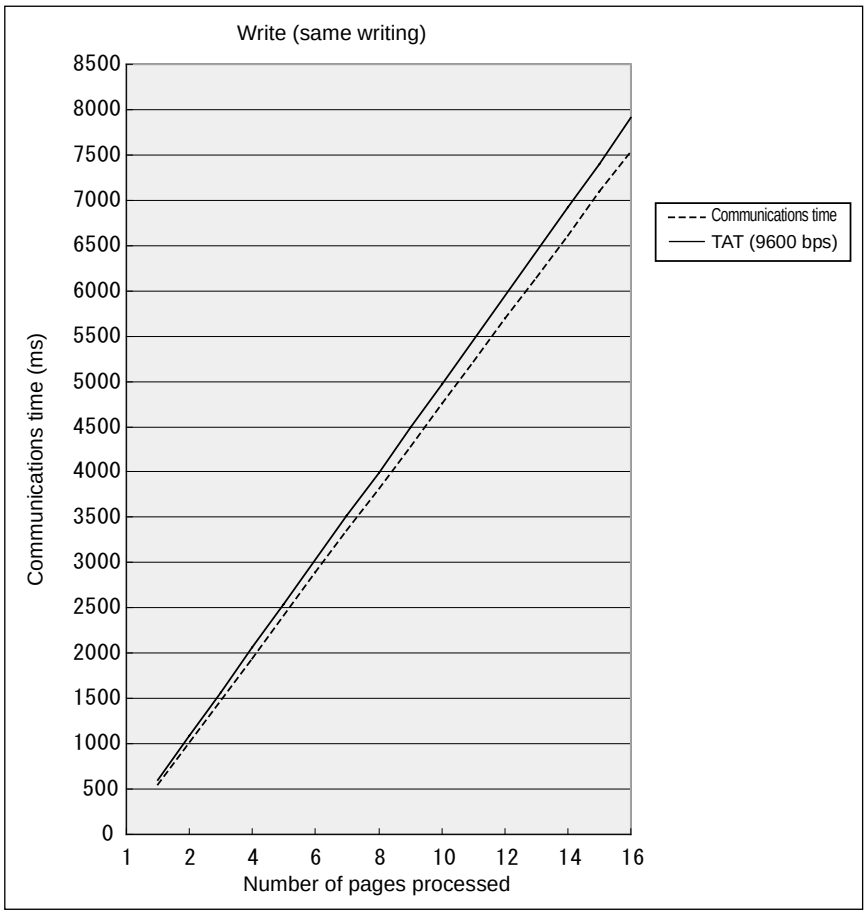

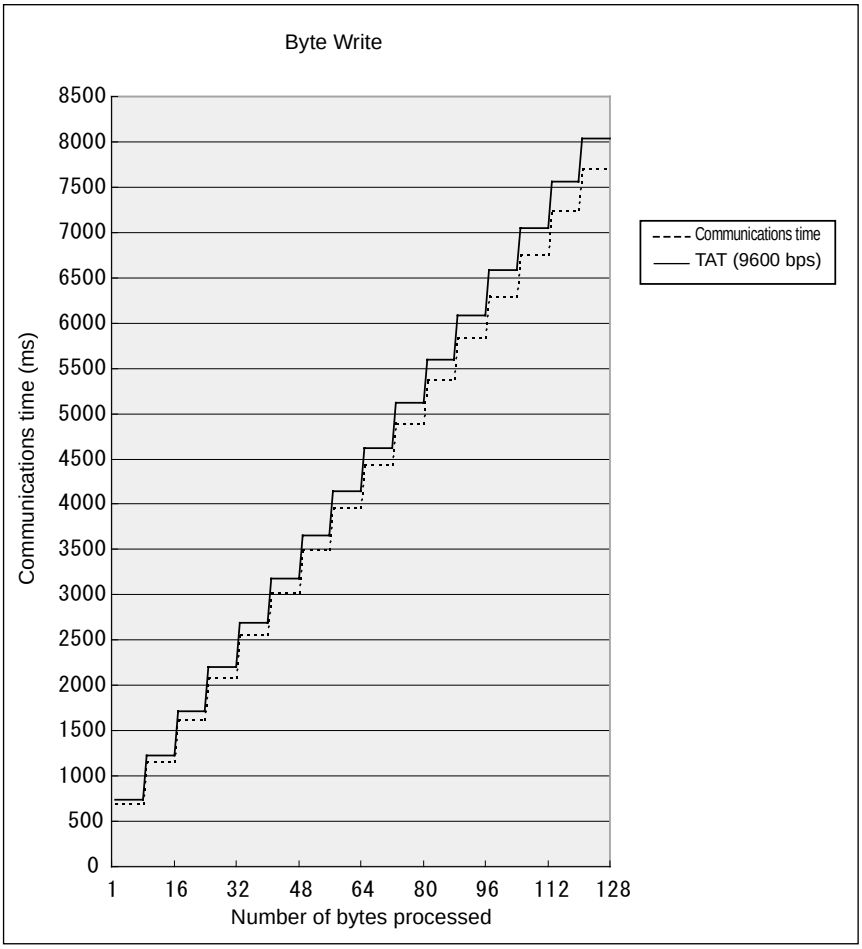
Byte Write
Communications time (ms)
8500
8000
7500
7000
6500
6000
5500
5000
4500
4000
3500
3000
2500
2000
1500
1000
500
0
1
16
32
48
64
80
96
112
128
Number of bytes processed
Communications time
TAT (9600 bps)

Communications Distance Characteristics vs. Ambient Noise

The graph below compares the results of measurement using the noise measurement function with communications distances.
At installation implement measures in regard to metal in the vicinity of the CIDRW Head, power supply noise, and atmospheric noise, to ensure that the noise level does not exceed "10."

Noise measurement command (applies only when SECS is not used) Refer to page 82.

Relationship between noise level and communications distance (reference values)

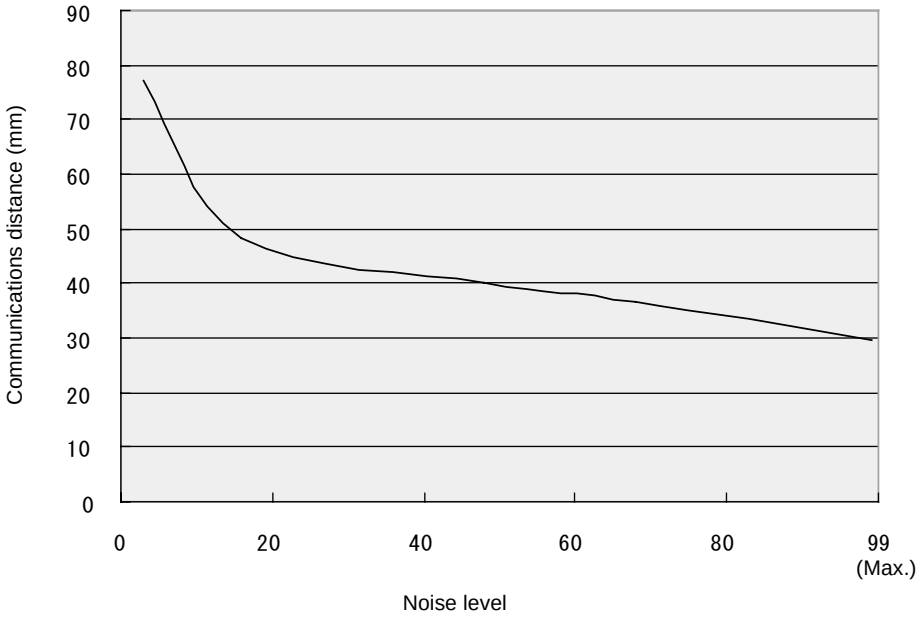

Data Segment Area

The data segment area of the RI-TRP-DR2B ID Tag is shown below.
When using a CIDRW Controller, always set the data segment.

Refer to page 48.

Data segment area

Page	8 bytes/1 page							
1	00h	01h	02h	03h	04h	05h	06h	07h
2	08h	09h	0Ah	0Bh	0Ch	0Dh	0Eh	0Fh
3	10h	11h	12h	13h	14h	15h	16h	17h
4	18h	19h	1Ah	1Bh	1Ch	1Dh	1Eh	1Fh
5	20h	21h		•••	•••			27h
6	28h	29h		•••	•••			2Fh
7	30h	31h		•••	•••			37h
8								
9								:
10	:							:
11	:							
12								
13								
14	68h	69h		•••	•••			6Fh
15	70h	71h		•••	•••			77h
16	78h	79h		•••	•••			7Fh
17	80h	81h		•••	•••			87h

Carrier ID (16 byte)

Data area (Total of 120 bytes)

Example of data segment settings

DATASEG	LENGTH
Carrier ID	16
"S01"	8
"S02"	8
"S03"	8
"S04"	8
"S05"	8
"S06"	8
"S07"	8
"S08"	8
"S09"	8
"S10"	8
"S11"	8
"S12"	8
"S13"	8
"S14"	8
"S15"	8

CHECK!

- The carrier ID memory area starts from page 1 (fixed).
- 00h to 87h in the table are addresses.

Regular Inspection

In order to maintain optimum performance of the functions of the CIDRW system, daily and periodic inspections are necessary.

Inspection item		Detail	Criteria	Tools required
Supply voltage fluctuation		Check that the supply voltage fluctuation at the power supply terminal block is within the permissible range.	To be within supply voltage rating.	Multimeter
		Check that there are no frequent instantaneous power failures or radical voltage drops.	To be within permissible voltage fluctuation range.	Power supply analyzer
Environment	Ambient temperature	Check that the ambient temperature and humidity are within specified range.	To be within the specified range.	Maximum and minimum thermometer Hygrometer
	Ambient humidity			
	Vibration and shock	Check that no vibration or shock is transmitted from any machines.		
	Dust	Check that the system is free of dust accumulation.	To be none.	
	Corrosive gas	Check that no metal part of the system is discolored or corroded.		
I/O power supply	Voltage fluctuation	Check on the I/O terminal block that the voltage fluctuation and ripple are within the permissible ranges.	To be within the specified range.	Multimeter Oscilloscope
	Ripple			
Mounting condition		Check that each device is securely mounted.	There must be no loose screws.	—
		Check that each connector is securely connected.	Each connector must be locked or securely tightened with screws.	
		Check that no screw of the terminal block is loosened.	There must be no loose screws.	
		Check that no wire is broken or nearly broken.	There must be no wire that is broken or nearly broken.	
		Check if grounding to 100 Ω or less has been done.	To be grounded to 100 Ω or less.	

SECS Protocol Specifications

A summary of the SEMI standards that relate to CIDRW is provided for reference when using this product. However, since the SEMI standards are subject to revision, you should also refer to the actual standards.

- SEMI E99 THE CARRIER ID READER/WRITER FUNCTIONAL STANDARD
- SEMI E5 EQUIPMENT COMMUNICATION STANDARD 2 MESSAGE CONTENT (SECS II)
- SEMI E4 EQUIPMENT COMMUNICATION STANDARD 1 MESSAGE TRANSFER (SECS I)

Operation Model

Set the CIDRW Controller's mode switch to "0" and start the system. When the system starts, the initial processing is completed first, then the system will operate according to the status defined by E99.

CIDRW status model

Operational status	OPERATING	Operation in progress in the operating mode	
		IDLE	Status in which no processing is in progress at any head
		BUSY	Status when processing is in progress at any of the heads
	MAINTENANCE	Operation in progress in the maintenance mode # Transitions according to state changes from the host device	
Alarm status	No alarm	Status in which there are no alarms currently in effect at the CIDRW Controller or any of the connected heads	
	ALARM	Status in which an alarm has occurred • If a head in an abnormal status is detected during head detection in initial processing, or no heads are detected. (The error will not be cleared until the system has been restarted with the heads connected correctly.) • When a head error is detected in communications with an ID Tag. (The error will be automatically reset if it is cleared in subsequent processing.) • A CIDRW Controller internal error has occurred.	
Initial status (INITIALIZING)	This is the status during processing such as internal initialization/head detection after startup, which is maintained until the CIDRW system is capable of its proper functions.		

CIDRW Head status model

Operational status	OPERATING	Status in which the head is operating normally	
		IDLE	Status in which no processing is in progress
		BUSY	Status in which processing is in progress
	NON-OPERATING	Status in which a head check (CIDRW Head, Link Unit) is necessary (The CIDRW alarm status is the ALARM status.)	

Protocol Specifications

- Character composition

Start bit (1) + data bits (8) + stop bit (1)
* Conforms to SEMI E4

- Protocol parameters

Sign	Name	Default setting	Setting range	Setting unit
BAUD	Baud Rate	9600	1200, 2400, 4800, 9600, 19200, 38400, 57600, 115200	-
DEVID	Device ID	0	0 to 32767	1
T1	Time-out between characters	0.5 s	0.1 to 10 s	0.1 s
T2	Protocol time-out	10 s	0.2 to 25 s	0.2 s
T3	Response time-out	45 s	1 to 120 s	1 s
T4	Time-out between blocks	45 s	1 to 120 s	1 s
RTY	Retry limit	3	0 to 31	1
M/S	Master/slave	M	M : Master S : Slave	-

- Double block detection

The header of the block currently being received is compared with the correct block received immediately before, and double blocks are detected. A setting in the setting mode determines whether this function is used or not.

- Multi-block

Multi-blocks are supported at the receiving side (maximum of 128 blocks).
Multi-blocks are used at the sending side.

- Message size

The maximum receivable message size is 32 kbytes.

- Interleaving

The receiving side supports interleaving and block interleaving.
The sending side uses interleaving and block interleaving.
The maximum number of simultaneously open transactions is 16. If the maximum number is exceeded, SxF0 (abort transmission) is sent.

- Device ID

The number of device IDs used is 1. Device IDs are specified in the setting mode.

- Block numbers

With a single block, the block number is either 1 or 0. For multi-block transmission, the numbers 1 to 128 are used. The block number for a single block is set in the setting mode.

- Treatment of the systems byte

The system byte comprises the source ID and the transaction ID.
The source ID is a fixed value and is specified in the setting mode.
The initial value of the transaction ID is 1 and the maximum value is 0xFFFF. The value is incremented from the first message transmission.

- Storing

  The method for storing in the BUSY status, e.g. because the internal buffer is full, is to use "NAK transmission."

- Processing for time-out detection

  At T3 and T4 time-outs, the time-out is notified by the S9F9 message.

- SECS parameters

Item	Default setting	Range	Setting Unit
Double block detection yes/no	1	1: The header of the block currently being received is compared with the correct block received immediately before, and double blocks are detected. 0: Double block detection is not performed.	-
Source ID	0	0 to 32767	1
Single block No.	1	0, 1	-

Support Attributes

CIDRW attribute definitions

	Attribute names	Description	Access	Re-quest	Format and mounting
Basic items	"Configuration"	Number of CIDRW Heads	RO	Y	20 "00"-"31" The number of heads connected when the system power is turned ON (automatic recognition)
	"AlarmStatus"	Substate of current CIDRW alarms	RO	Y	20 "0" = no alarm "0" = alarm has occurred
	"OperationalStatus"	Substate of current CIDRW operations	RO	Y	20 "IDLE" "BUSY" "MANT"
	"SoftwareRevisionLevel"	Software revision (version)	RO	Y	20 6byte "VVV.RR" (VVV = version, RR = revision)
Option	"DateInstalled	Date on which the sub-system was installed	RW	N	20 8 bytes All " " (space) on shipping
	"DeviceType"	CIDR / CIDRW classifica-tion	RO	N	20 5 bytes "CIDRW"
	"HardwareRevisionLevel"	Hardware revision number	RO	N	20 6 bytes "VVV.RR" (VVV = version, RR = revision)
	"MaintenanceData"	Supplier dependent	RW	N	20 80 bytes All " " (space) on shipping
	"Manufacturer"	Manufacturer's name or ID	RO	N	20 17 bytes "OMRON Corporation"
	"ModelNumber"	Model name according to the maker	RO	N	20 6 bytes "L21 "
	"SerialNumber"	System serial number	RO	N	20 max. 20 bytes (Not supported by the CIDRW)

Reader/writer head attribute definition

	Attribute names	Description	Access	Re-quest	Format and mounting
Basic items	"HeadStatus"	Current status	RO	Y	20 "IDLE" "BUSY" "NOOP"
	"HeadID"	Head number 1 to 31	RO	Y (multi)	20 "01"-"31" ("00" indicates the CIDRW itself, so cannot be used.)
Option	"Cycles"	Number of read/write operations executed	RO	N	54 (unsigned 4-byte integer) (Not supported by the Reader/Writer Head)
	"HeadCondition"	Maintenance status	RO	N	20 "NO": No alarm "NM": Status in which normal operation is not possible and maintenance is necessary "RW": Read/write error "RT": Read/write error rate (Not supported by the Reader/Writer Head) "NP": Status of power supply and connection errors
	"HeadDateInstalled"	Date on which the head was installed	RO	N	20 "YYYYMMDD" (Not supported by the Reader/Writer Head)
	"HeadMaintenanceData"	Supplier dependent	N	N	20 (Not supported by the Reader/Writer Head)

ASCII Code Table

Leftmost bits / Right-most bits	b8 - b5	0000	1001	0010	0011	0100	0101	0110	0111	1000	1101	1010	1011	1100	1101	1110	1111
b4 - b1	Row / Line	0	1	2	3	4	5	6	7	8	9	10	11	12	13	14	15
0000	0	NUL	TC7(DLE)	(SP)	0	@	P	`	p	Undefined		Undefined				Undefined	
0001	1	TC1(SOH)	DC_1	!	1	A	Q	a	q								
0010	2	TC2(STX)	DC_2	"	2	B	R	b	r								
0011	3	TC3(ETX)	DC_3	#	3	C	S	c	s								
0100	4	TC4(EOT)	DC_4	$	4	D	T	d	t								
0101	5	TC5(NEQ)	TC_8(NAK)	%	5	E	U	e	u								
0110	6	TC6(ACK)	TC_9(SYN)	&	6	F	V	f	v								
0111	7	BEL	TC_{10}(ETB)	'	7	G	W	g	w								
1000	5	FE0(BS)	CAN	(	8	H	X	h	x								
1001	9	FE1(HT)	EM	)	9	I	Y	i	y								
1010	10	FE2(LF)	SUB	*	:	J	Z	j	z								
1011	11	FE3(VT)	ESC	+	;	K	[	k	{								
1100	12	FE4(FF)	IS_4(FS)	,	<	L	\	l	|								
1101	13	FE5(CR)	IS_3(GS)	-	=	M	]	m	}								
1110	14	S0	IS_2(RS)	.	>	N	^	n	ÅP								
1111	15	S1	IS_1(US)	/	?	O	ÅQ	o	DEL								

Protective Construction

IP-□□ is governed by the test methods described below. Check in advance the seal characteristics under the actual environment and conditions of use.
IP is the abbreviation of International Protection.

■ IEC (International Electrotechnical Commission) Standard (IEC60529: 1989-11)

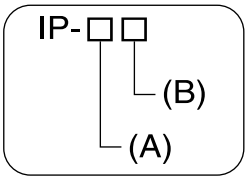

(A) First numeral in code: Class of protection against entry of solid foreign material

Class	Degree of protection	
0		No protection
1	φ50mm	Protected against access by solid objects with a diameter of 50 mm or greater (e.g. human hands).
2	φ12.5mm	Protected against access by solid objects with a diameter of 125 mm or greater (e.g. fingers).
3	2.5mm	Protected against access by wires and solid bodies with a diameter of 25 mm or greater.
4	1mm	Protected against access by wires and solid bodies with a diameter of 1 mm or greater.
5		Entry of volumes of dust that would cause difficulties in normal operation of devices or compromise safety is prevented.
6		Entry of dust is prevented.

(B) Second numeral of code: Class of protection against the entry of water

Class	**Degree of protection**		**Outline of test methods (tests using water)**
0	No special protection	No protection against the entry of water.	No test
1	Protection against droplets of water	The product suffers no ill effects from droplets of water falling vertically onto it.	Water droplets are sprayed onto the product from directly above for 10 minutes by water droplet exposure test apparatus. 200mm
2	Protection against droplets of water	The product suffers no ill effects from droplets of water directed at it at an angle of up to 15° to vertical.	The water droplet exposure test apparatus is set to 15° from vertical and water droplets sprayed onto the product for 10 minutes (total of 2.5 minutes in each direction). 15° 200mm

Class	Degree of protection		Outline of test methods (tests using water)
3	Protection against spraying water	The product suffers no ill effects from a water spray directed at it at up to 60° from vertical.	Using the test apparatus shown in the figure to the right, water is sprayed from both directions, onto both sides of the product, at angles up to 60° from vertical for 10 minutes. 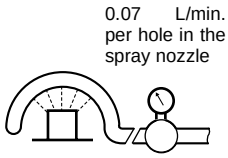
4	Protection against splashing water	The product suffers no ill effects from water splashed on it from all directions.	Using the test apparatus shown in the figure to the right, water is splashed onto the product from all directions for 10 minutes.
5	Protection against water jets	The product suffers no ill effects from a water jet aimed directly at it from all directions.	Using the test apparatus shown in the figure to the right, a water jet is directed at the product from all directions for 1 minute per square meter of outer casing, with a minimum total exposure of 3 minutes. 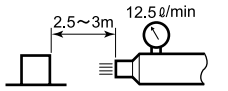 Diameter of spray nozzle head: ϕ6.3
6	Protection against powerful jets of water	Water does not enter the product when a powerful jet of water is directed at it from all directions.	Using the test apparatus shown in the figure to the right, a water jet is directed at the product from all directions for 1 minute per square meter of outer casing, with a minimum total exposure of 3 minutes. 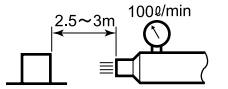 Diameter of spray nozzle head: ϕ12.5
7	Protection against immersion in water	No entry of water on immersion in water at the stipulated pressure for the stipulated time.	Immerse in water for 30 minutes at a depth of 1 meter (when the height of the apparatus is less than 850 mm). 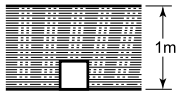
8	Protection against immersion in water	The product can be used while continually immersed in water.	Depends on arrangements made between the manufacturer and the user of the product.

■ JEM (Japan Electrical Manufacturers's association) Standard (JEM1030 : 1991)

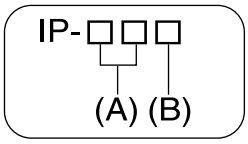

(A) is consistent with IEC60529 code numbers 1 and 2.

(B) class offering protection against entry of oil

Class	Degree of protection	
f	Oil-proof model	The product is not harmed by oil droplets and oil jets from all directions.
g	Oil-resistant model	Oil does not enter the product when oil droplets and oil jets are directed at it from all directions.

Note: There are also classes c, d, and e.

■ NEMA (National Electrical Manufacturers' Association)

Table for conversions between NEMA enclosure ratings and IEC60529 (conversion the other way is not possible)

NEMA250	IEC60529
1	IP10
2	IP11
3	IP54
3R	IP14
3S	IP54
4,4X	IP56
5	IP52
6,6P	IP67
12,12K	IP52
13	IP54

Note: From Annex A of the NEMA 250 standard. The differences between the NEMA enclosure ratings and IEC60529 include points such as corrosion, rust resistance, and wettability.

Index

A

Amplifier Unit 23, 30
Amplifier Unit Indicators 90
Amplifier Unit V640-HAM11 16
ASCII Code Table 118

B

Byte Write 80

C

Change the data segment area 48
Change the response time-out time 51
Changing the Position of the Mode Switch on the Bottom of the Unit 44
Characteristic Data depending on Conditions of Use 101
CIDRW Controller 22, 27
CIDRW Controller V700-L21 15
CIDRW Head 24
CIDRW Head V640-HS61 17
CIDRW Systems that Conform to SEMI Standards (SEMI E99, E5, E4) 13
Coaxial Mounting 102
Command 75
Command/Response Format 74
Characteristics vs. Ambient Noise 110
Communications Test 59
Communications Time 107
Component Names and Functions 15
Connections and Wiring 27
Connector for connecting a CIDRW Head 30
Controller Indicators 84

D

Data Reading and Writing 24
Data Segment Area 111

F

Features 13
Flowchart for Getting Started 19
For Coaxial Installation 105
For Face-to-Face Installation 105
For Parallel Installation 105
From Installation to Trial Operation 91
From Trial Operation to Communications 93

H

Host Connection Port 38

I

ID Tag ↔ CIDRW System Communications Test 60
IEC (International Electrotechnical Commission) Standard (IEC605291989-11) 119
Influence of Background Metal on ID Tag 25
Influence of Background Metals (Reference Only) 106
Influence of Noise 25
Installation 22

J

JEM (Japan Electrical Manufacturers's association) Standard (JEM10301991) 121

L

Link Unit 26, 37
Link unit V700-L11 18
List of Error Messages 84, 90

M

Maps of Communications Areas (Reference Only) 102
Message Specifications 64
Mounting 25
Multi-connection port 41
Mutual Interference Distances (Reference Only) 105

N

NAK 82
NEMA (National Electrical Manufacturers' Association) 121
Noise measurement 82
Normal Operation Mode 85

O

Operation Check Flowchart 85, 91
Operation Model 113

Index

P

Parallel Mounting 103
Positional Relationship between the CIDRW Head and the ID Tag 24
Power Supply 37
Power Supply and Grounding Wires 27, 30
Protective Construction 119
Protocol Specifications 114

R

READ 76
Regular Inspection 112
RESET 82
Return to the Normal Operation mode 53
RS-232C Port 32
RS-485 Port 35

S

Same Write 79
SECS port 28
SECS Protocol Specifications 113
Sending a Switching Command from the Host Device 45
Set the Communications Conditions for Amplifier Units 55
Set the Communications Conditions for Link Units 57
Set the Communications Conditions for the CIDRW Controller 44
Set the parameters for the communications conditions 46
Setting Mode 88
Specifications and Dimensions 96
Specifications for Each Stream/Function 66
Start the terminal software 45
Support Attributes 116
Switch to the Setting mode 44
System Configuration 14

T

TEST 81
Test for Communications with the Host Device 59

V

Vertical Mounting 104

W

What is a CIDRW System? 12
When SECS is Not Used 59, 62, 74, 90
When SECS is Used 14, 59, 60, 64, 84
When the Mode is Selected by a Command Sent from the Host Device 53
When the Mode is Selected with the Mode Switch on the Bottom of the Unit 53
WRITE 77

Revision History

A manual revision code appears as a suffix to the catalog number on the front cover of the manual.

Cat. No. Z167-E1-1

Revision code

The following table outlines the changes made to the manual during each revision. Page numbers refer to the previous version.

Revision code	Date	Revised content
1	January 2003	Original production

OMRON Corporation
Industrial Automation Company

Sensing Devices and Components Division H.Q.
FA Auto-identification Components Department
Shiokoji Horikawa, Shimogyo-ku, Kyoto, 600-8530 Japan
Tel : (81)75-344-7069 / Fax : (81)75-344-7107

Regional Headquarters

OMRON EUROPE B.V.
Sensor Business Unit
Carl-Benz-Str. 4, D-71154 Nufringen,
Germany
Tel : (49)7032-811-0 / Fax : (49)7032-811-199

OMRON ELECTRONICS LLC
1 East Commerce Drive, Schaumburg, IL 60173
U.S.A.
Tel : (1)847-843-7900 / Fax : (1)847-843-8568

OMRON ASIA PACIFIC PTE. LTD.
83 Clemenceau Avenue, #11-01, UE Square,
239920 Singapore
Tel : (65)835-3011 / Fax : (65)835-2711

OMRON CHINA CO., LTD.
BEIJING OFFICE
Room 1028, Office Building,
Beijing Capital Times Square,
No.88 West Chang'an Road,
Beijing, 100031 China
Tel : (86)10-8391-3005 / Fax : (86)10-8391-3688

OMRON

Authorized Distributor:

Cat. No. Z167-E1-01

Note: Specifications subject to change without notice.