OMRON

V680 Series

User's Manual

DeviceNet ID Slave

V680-HAM42-DRT

Antennas

V680-HS51
V680-HS52
V680-HS61
V680-HS63
V680-HS65

RF Tags

V680-D1KP52MT
V680-D1KP52M-BT01/-D1KP52M-BT11
V680-D1KP53M
V680-D1KP54T
V680-D1KP66T/-D1KP66MT
V680-D1KP66T-SP
V680-D1KP58HTN
V680-D2KF52M
V680-D2KF52M-BT01/-D2KF52M-BT11
V680-D8KF67/-D8KF67M
V680-D8KF68/-D32KF68
V680S-D2KF67/-D2KF67M
V680S-D2KF68/-D2KF68M
V680S-D8KF67/-D8KF67M
V680S-D8KF68/-D8KF68M

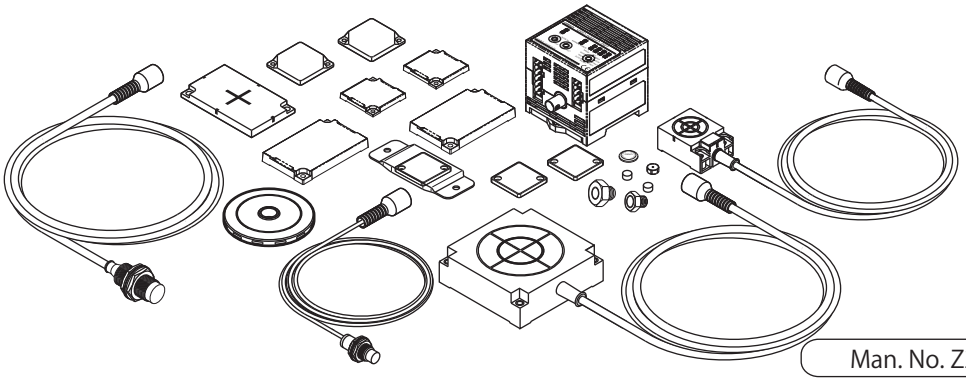

Man. No. Z278-E1-10

Introduction

Thank you for purchasing a V680/V680S-series RFID System. This manual describes the functions, performance, and application methods needed for optimum use of the V680/V680S-series RFID System.

Please observe the following items when using the RFID System.

- Allow the RFID System to be installed and operated only by qualified specialist with a sufficient knowledge of electrical systems.
- Read and understand this manual before attempting to use the RFID System and use the RFID System correctly.
- Keep this manual in a safe and accessible location so that it is available for reference when required.

Introduction	READ AND UNDERSTAND THIS DOCUMENT
Section 1	Product Overview
Section 2	Names and Functions of Components
Section 3	Functions and Operation
Section 4	Installation, Connections, and Wiring
Section 5	I/O Settings and Control Methods
Section 6	Troubleshooting
Section 7	Appendices

RFID System

V680-HAM42-DRT	ID Slave
V680-HS51	Antenna
V680-HS52	Antenna
V680-HS61	Antenna
V680-HS63	Antenna
V680-HS65	Antenna
V680-D1KP52MT	RF Tag
V680-D1KP52M-BT01/- D1KP52M-BT11	RF Tag
V680-D1KP53M	RF Tag
V680-D1KP54T	RF Tag
V680-D1KP66T/-D1KP66MT	RF Tag
V680-D1KP66T-SP	RF Tag
V680-D1KP58HTN	RF Tag
V680-D2KF52M	RF Tag
V680-DD2KF52M-BT01/ -D2KF52M-BT11	RF Tag
V680-D8KF67/-D8KF67M	RF Tag
V680-D8KF68/-D32KF68	RF Tag
V680S-D2KF67/-D2KF67M	RF Tag
V680S-D2KF68/-D2KF68M	RF Tag
V680S-D8KF67/-D8KF67M	RF Tag
V680S-D8KF68/-D8KF68M	RF Tag

User's Manual

READ AND UNDERSTAND THIS DOCUMENT

Please read and understand this document before using the products. Please consult your OMRON representative if you have any questions or comments.

WARRANTY

OMRON's exclusive warranty is that the products are free from defects in materials and workmanship for a period of one year (or other period if specified) from date of sale by OMRON.
OMRON MAKES NO WARRANTY OR REPRESENTATION, EXPRESS OR IMPLIED, REGARDING NON-INFRINGEMENT, MERCHANTABILITY, OR FITNESS FOR PARTICULAR PURPOSE OF THE PRODUCTS. ANY BUYER OR USER ACKNOWLEDGES THAT THE BUYER OR USER ALONE HAS DETERMINED THAT THE PRODUCTS WILL SUITABLY MEET THE REQUIREMENTS OF THEIR INTENDED USE. OMRON DISCLAIMS ALL OTHER WARRANTIES, EXPRESS OR IMPLIED.

LIMITATIONS OF LIABILITY

OMRON SHALL NOT BE RESPONSIBLE FOR SPECIAL, INDIRECT, OR CONSEQUENTIAL DAMAGES, LOSS OF PROFITS OR COMMERCIAL LOSS IN ANY WAY CONNECTED WITH THE PRODUCTS, WHETHER SUCH CLAIM IS BASED ON CONTRACT, WARRANTY, NEGLIGENCE, OR STRICT LIABILITY.
In no event shall responsibility of OMRON for any act exceed the individual price of the product on which liability is asserted.
IN NO EVENT SHALL OMRON BE RESPONSIBLE FOR WARRANTY, REPAIR, OR OTHER CLAIMS REGARDING THE PRODUCTS UNLESS OMRON'S ANALYSIS CONFIRMS THAT THE PRODUCTS WERE PROPERLY HANDLED, STORED, INSTALLED, AND MAINTAINED AND NOT SUBJECT TO CONTAMINATION, ABUSE, MISUSE, OR INAPPROPRIATE MODIFICATION OR REPAIR.

SUITABILITY FOR USE

THE PRODUCTS CONTAINED IN THIS DOCUMENT ARE NOT SAFETY RATED. THEY ARE NOT DESIGNED OR RATED FOR ENSURING SAFETY OF PERSONS, AND SHOULD NOT BE RELIED UPON AS A SAFETY COMPONENT OR PROTECTIVE DEVICE FOR SUCH PURPOSES. Please refer to separate catalogs for OMRON's safety rated products.
OMRON shall not be responsible for conformity with any standards, codes, or regulations that apply to the combination of products in the customer's application or use of the product.
At the customer's request, OMRON will provide applicable third party certification documents identifying ratings and limitations of use that apply to the products. This information by itself is not sufficient for a complete determination of the suitability of the products in combination with the end product, machine, system, or other application or use.
The following are some examples of applications for which particular attention must be given. This is not intended to be an exhaustive list of all possible uses of the products, nor is it intended to imply that the uses listed may be suitable for the products:

- Outdoor use, uses involving potential chemical contamination or electrical interference, or conditions or uses not described in this document.
- Nuclear energy control systems, combustion systems, railroad systems, aviation systems, medical equipment, amusement machines, vehicles, safety equipment, and installations subject to separate industry or government regulations.
- Systems, machines, and equipment that could present a risk to life or property.

Please know and observe all prohibitions of use applicable to the products.
NEVER USE THE PRODUCTS FOR AN APPLICATION INVOLVING SERIOUS RISK TO LIFE OR PROPERTY WITHOUT ENSURING THAT THE SYSTEM AS A WHOLE HAS BEEN DESIGNED TO ADDRESS THE RISKS, AND THAT THE OMRON PRODUCT IS PROPERLY RATED AND INSTALLED FOR THE INTENDED USE WITHIN THE OVERALL EQUIPMENT OR SYSTEM.

PERFORMANCE DATA

Performance data given in this document is provided as a guide for the user in determining suitability and does not constitute a warranty. It may represent the result of OMRON's test conditions, and the users must correlate it to actual application requirements. Actual performance is subject to the OMRON Warranty and Limitations of Liability.

CHANGE IN SPECIFICATIONS

Product specifications and accessories may be changed at any time based on improvements and other reasons.
It is our practice to change model numbers when published ratings or features are changed, or when significant construction changes are made. However, some specifications of the product may be changed without any notice. When in doubt, special model numbers may be assigned to fix or establish key specifications for your application on your request. Please consult with your OMRON representative at any time to confirm actual specifications of purchased products.

DIMENSIONS AND WEIGHTS

Dimensions and weights are nominal and are not to be used for manufacturing purposes, even when tolerances are shown.

ERRORS AND OMISSIONS

The information in this document has been carefully checked and is believed to be accurate; however, no responsibility is assumed for clerical, typographical, or proofreading errors, or omissions.

PROGRAMMABLE PRODUCTS

OMRON shall not be responsible for the user's programming of a programmable product, or any consequence thereof.

COPYRIGHT AND COPY PERMISSION

This document shall not be copied for sales or promotions without permission. This document is protected by copyright and is intended solely for use in conjunction with the product. Please notify us before copying or reproducing this document in any manner, for any other purpose. If copying or transmitting this document to another, please copy or transmit it in its entirety.

Safety Precautions

● Alert Symbols for Safe Use

The following symbols are used in this manual to indicate precautions that must be observed to ensure safe use of the V680-HAM42-DRT, V680-series Antennas, and V680/V680S-series RF Tags.
The precautions provided here contain important safety information. Be sure to observe these precautions.
The following signal words are used in this manual.

⚠ WARNING	Indicates a potentially hazardous situation which, if not avoided, will result in minor or moderate injury, or may result in serious injury or death. Additionally, there may be significant property damage.

● Meanings of Alert Symbols

⃠	Indicates general prohibitions for which there is no specific symbol.

● Warning

⚠ WARNING

These Products are not designed to be used either directly or indirectly in applications that detect human presence for the purpose of maintaining safety. Do not use these Products as a sensing means for protecting human lives.

Precautions for Safe Use

Be sure to observe the following precautions to ensure safe use of the Products.

1. Do not use the Products in environments with flammable, explosive, or corrosive gasses.
2. Do not attempt to disassemble, repair, or modify any Product.
3. Because a cable has a locking mechanism, make sure that it has been locked before using the cable.
4. Make sure the power supplied by the DC power supply unit is within the rated power supply voltage (24 VDC +10%/–15%) before using the Product.
5. Do not connect the power supply in reverse.
6. Do not allow water or pieces of wire to enter from openings in the case. Doing so may cause fire or electric shock.
7. Make sure that the ID Slave is provided with sufficient ventilation space.
8. Do not install the Products near any equipment that generates a large amount of heat (such as heaters, transformers, and large-capacity resistors).
9. Turn OFF the Controller power supply before mounting or removing an Antenna.
10. If an error is detected in any Product, immediately stop operation and turn OFF the power supply. Consult with an OMRON representative.
11. Dispose of the Products as industrial waste.
12. Using thinner, benzene, acetone, or kerosene for cleaning may affect the resin parts and the surface of the case. For detail, refer *Chemical Resistance of RF Tags* on page 226 and do not use chemicals that affect the resin parts and the surface of the case.
13. If multiple Antennas are mounted near each other, communications performance may decrease due to mutual interference. Refer to *Reference Data* in *Section 6 Appendices* and check to make sure there is no mutual interference.
14. To remove the Unit, catch a tool on the hook and gently remove the Unit.
15. Do not perform wiring incorrectly or short-circuit the load. Doing so may result in rupture or damage from burning.
16. Do not use the Products in environments subject to oil.
17. Do not never use the AC power supply.

Precautions for Correct Use

Always observe the following precautions to prevent operation failures, malfunctions, and adverse effects on performance and equipment.

1. Installation and Storage Environment

Do not use or store the Product in the following locations.

- Locations subject to corrosive gases, dust, dirt, metal powder, or salt.
- Locations where the specified ambient temperature and ambient humidity range is exceeded.
- Locations subject to extreme temperature changes that may result in condensation.
- Locations where the product would be directly subjected to vibration or shock exceeding specifications.
- Locations subject to contact with water, oil, or chemicals

2. Installation

- The Products communicate with RF Tags using the 13.56-MHz frequency band. Some transceivers, motors, inverters, and switching power supplies generate noise that can affect communications with the RF Tags and cause errors. If such devices are located near the RF Tags, always test operation in advance to confirm whether the system will be affected.
- Observe the following precautions to minimize the effects of normal noise.

  (1) Ground all metal objects in the vicinity of the Products to 100 Ω or less.

  (2) Do not use the Products near high-voltage or high-current lines.
- Always bundle the cables connected to the power supply terminals and the ground terminal and connect the enclosed ferrite core (ZCAT2032-0930 manufactured by TDK).
- Do not pull on the cables with excessive strength.
- The Products are not waterproof. Do not use them in an environment where mist is present.
- Do not expose the Products to chemicals that adversely affect the Product materials.
- The communications range is adversely affected if there is any metal material around the RF Tag.
- Transmission will not be possible if the front and back panels are mistakenly reversed and the Unit is mounted to a metallic surface.

  V680-D1KP66MT
  V680S-D2KF67M
  V680S-D2KF68M
  V680S-D8KF67M
  V680S-D8KF68M
- The transmission distance will be reduced when the Unit is not mounted to a metallic surface. mounted to a metallic surface.

  V680-D1KP66MT
  V680S-D2KF67M
  V680S-D2KF68M
  V680S-D8KF67M
  V680S-D8KF68M
- The maximum communications range can be obtained when the Antenna faces the RF tag directly. When the RF tag is installed at a tilt, the communications range is reduced. Consider the effect of the RF tag at tilt when installing the RF Tag.
- Provide the mounting distances between plural RF tags to prevent them from malfunctions due to mutual interference.

- If the central axis of an antenna and RF tag shifts, a communications range will fall.
- Do not touch the product immediately after usage at high temperatures. Doing so may occasionally result in burning.

3. Use at high temperatures (V680-D1KP58HTN)

- Data stored in memory in the RF Tag may be lost due to the characteristics of EEPROM, if the accumulated usage time of the RF Tag at a high temperature over 125°C exceeds 10 hours after writing data to the RF Tag.
- Do not communicate between the Antenna and the RF Tag in an environment where the ambient operating temperature is 85°C or higher.
  An error in communications between the Antenna and the RF Tag may occur.
- Do not use the commands using UID (unique identification number for each RF Tag) when the RF tag is used at a high temperature over 125°C. The UID may be lost due to the characteristics of EEPROM.

CHECK!

For Use at high temperatures, refer to *Product Specifications - Use at high temperatures (V680-D1KP58HTN) in Section 7 Appendices*.
p.108

Meanings of Symbols

CHECK! Indicates particularly important points related to a function, including precautions and application advice.

Indicates page numbers containing relevant information.

Indicates reference to helpful information and explanations for difficult terminology.

MEMO

Table of Contents

Introduction 1

READ AND UNDERSTAND THIS DOCUMENT 2

Safety Precautions 3

Precautions for Safe Use 4

Precautions for Correct Use 5

Meanings of Symbols 7

Table of Contents 9

Section 1 Product Overview 11

Features 12

System Configuration 13

Application Flowchart 14

Section 2 Names and Functions of Components 15

ID Slave 16

Antennas 20

RF Tags 21

Section 3 Functions and Operation 23

ID Slave 24

RF Tags 30

Section 4 Installation, Connections, and Wiring 37

Installing ID Slave 38

Installing Antennas 44

Installing RF Tags 47

Section 5 I/O Settings and Control Methods 57

I/O Specifications 58

Timing Charts 73

Sample Program for Host 79

Section 6 Troubleshooting 83

Handling Errors 84

Errors and Countermeasures 85

Maintenance and Inspection 86

Section 7 Appendices 87

Product Specifications 88

Characteristics 122

Reference Data 167

RF Tag Memory Map 217

RF Tag Memory Capacities and Memory Types 218

Multi-vendor Use 219

Chemical Resistance of the Antennas 225

Chemical Resistance of RF Tags 226

Degree of Protection 231

Revision History 234

Section 1
Product Overview

Features	12
System Configuration	13
Application Flowchart	14

Features

The V680-series RFID System uses electromagnetic induction and supports the ISO/IEC 18000-3 (ISO/IEC 15693) RFID system international standards. With compliance to DeviceNet, a world standard for host interfaces, the V680 enables constructing more universal systems.

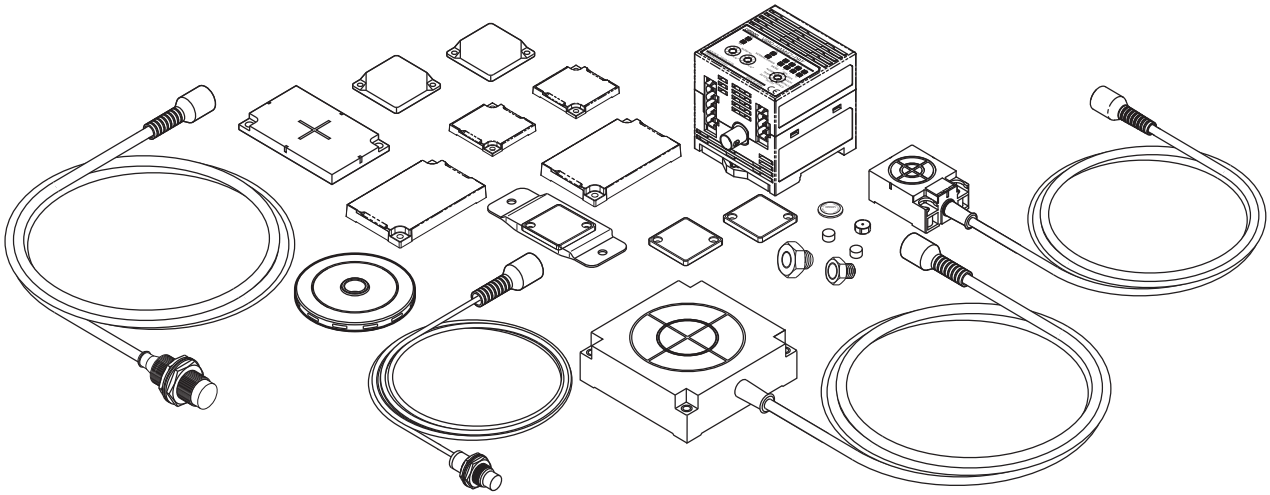

■ Compatible with DeviceNet

Compliance with DeviceNet enables constructing more universal systems.

■ Compact Design with an Internal Amplifier

With a compact size of 65 × 65 × 65 mm(W × H × D), the ID Slave requires less space for installation. V680-series RF Tags and Antennas can be used.

■ Read/Write Up to 58 Byte of Data

Functionality is enhanced with accesss modes for 4, 26, and 58 bytes, and “visible“ communications.

■ Access Modes Compatible with the V600-HAM42-DRT

Replacing the V680-HAM42-DRT is easy because the V680 includes access modes that are compatible with the V600, so existing assets can be used.

■ Conforms to International Standards of ISO/IEC 18000-3 (ISO/IEC 15693)

Compliance with international standards enables the V680 to be exported to and used in the world’s main countries.

System Configuration

The ID Slave conforms to the open network DeviceNet and enables simple connection for slaves using special connectors. One-touch connectors on the Amplifier and Antenna improve usability. Also, any of the V680/V680S-series RF Tags can be used.

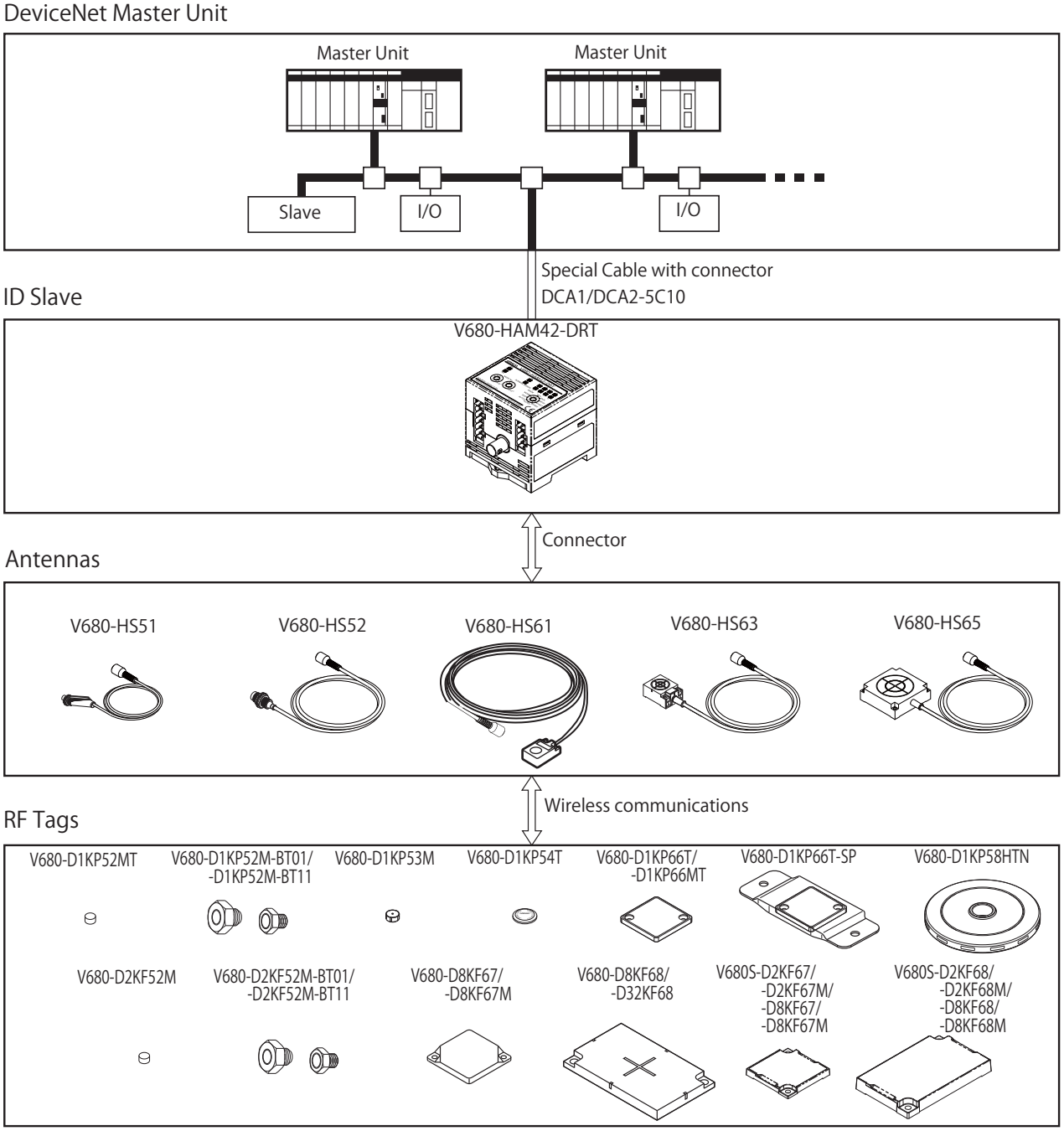

CHECK! For the Combination of Antenna and RF Tag, refer to Communications Range Specifications in Section 7 Appendices.

p.122 to p.134

CHECK! When using a V680-D8KF @@, to use the ID Slave production after October 2014.

Application Flowchart

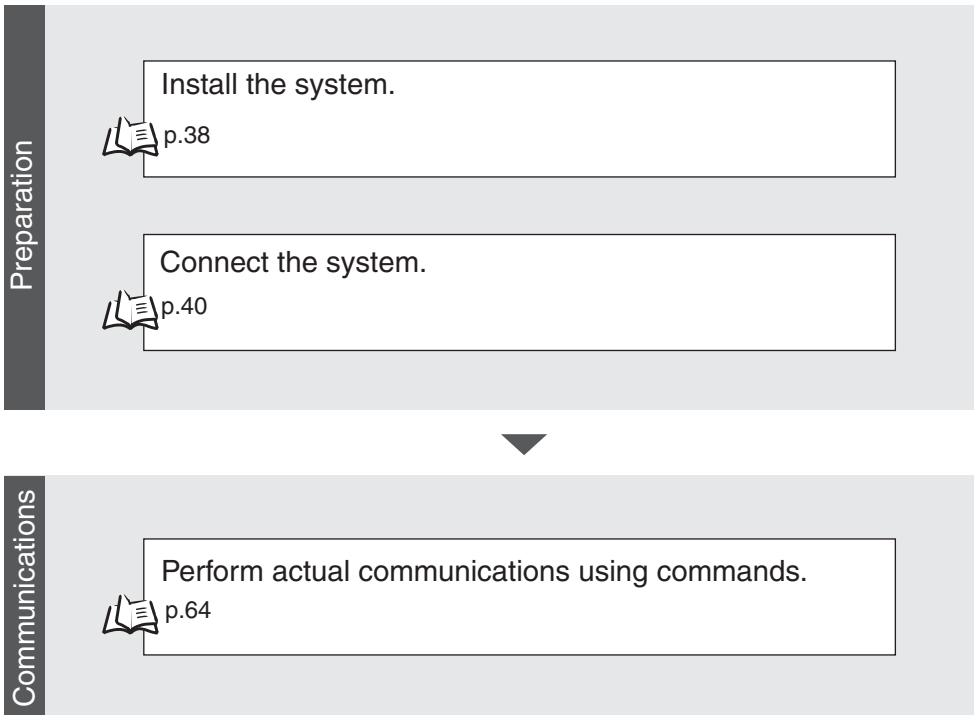

Section 2
Names and Functions of Components

ID Slave	16
Antennas	20
RF Tags	21

ID Slave

Part Names

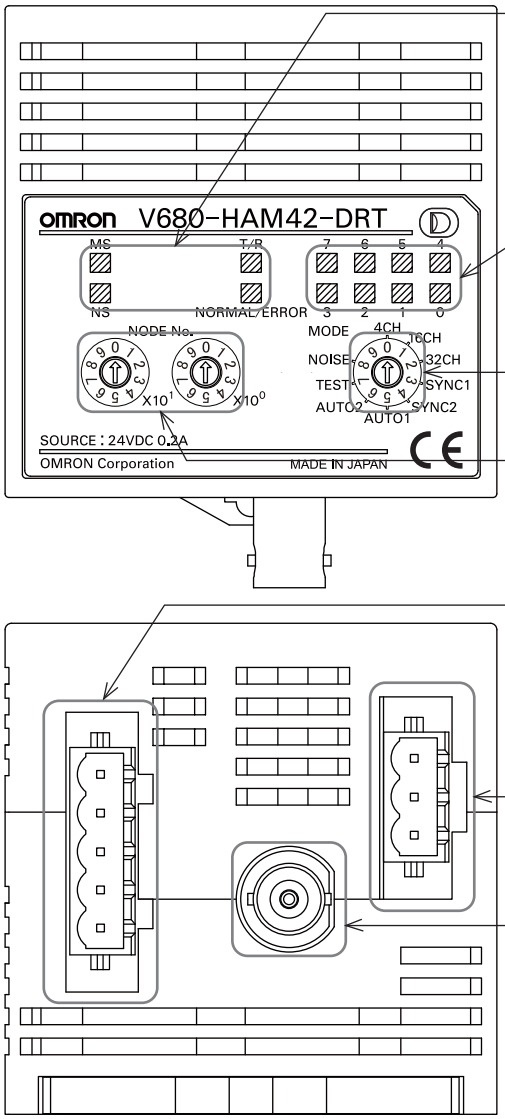

■ Operation Indicators

MS: Moudule status
NS: Network status
T/R: RF Tag communications status
NORMAL/ERROR: Result of communications with RF Tag

■ Data/Error Code Indicators (Two-color)

Data (green)
Error code (red)

■ Mode Switch

ID Slave operating mode setting switch

■ Node Address Switches

Node address setting switches (00 to 63)

■ DeviceNet Connector

Connects to DeviceNet Master Unit.

■ Power Supply Connector

Connect to 24-VDC power.
Recommended Power Supply: S8VS-03024(OMRON)

■ Antenna Connector

Connects to V680-series Antenna (V680-HS□□).

Functions

Operation Indicators

MS Indicator

The MS indicator shows the ID Slave status.

Status		Definition
	Lit green	Normal
	Flashing green	Settings not made.
	Lit red	Fatal error (Hardwere error)
	Flashing red	Non-fatal error (node adress switch steeing error)
	Not lit	No power

NS Indicator

The NS indicator shows the network status.

Status		Definition
	Lit green	Communications connected.
	Flashing green	Communications not connected.
	Lit red	Fatal communications error (Duplicate node address or bus OFF detection)
	Flashing red	Non-fatal communications error (communications timeout)
	Not lit	No power

T/R Indicator

The T/R indicator shows the RF Tag communications status.

Status		Definition
	Lit yellow	RF Tag is communicating.
	Not lit	Standby

NORMAL/ERROR Indicator

The NORMAL/ERROR indicator shows the result of communications with RF Tags.

Status		Definition
	Lit green	Normal end
	Lit red	Error end
	Not lit	Standby

Data/Error Code Indicators

These indicators show the first byte of data that was read or written when communications ends normally. They also show the error code if communications end in an error.

Status		Definition
	Lit green	Data displayed.
	Lit red	Error code displayed.
	Not lit	Standby

CHECK! For information on the handling of error, refer to *Handling Errors* in *Section 6 Troubleshooting*.

p.84

■ Mode Switch

The mode switch sets the ID Slave's operating mode.

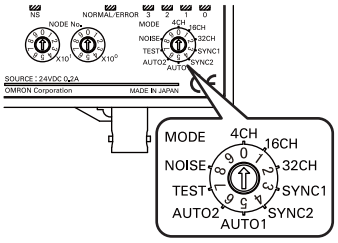

Mode	Symbol	Description	Maximum accessible bytes for RF Tag data	Words allocated in Master Unit
0	4CH	4-byte access mode	Read/Write: 4 bytes each	IN/OUT: 4 words each
1	16CH	26-byte access mode	Read/Write: 26 bytes each	IN/OUT: 16 words each
2	32CH	58-byte access mode	Read/Write: 58 bytes each	IN/OUT: 32 words each
3	SYNC1	V600-compatible Trigger Mode, 100-ms output time	Read: 3 bytes, Write: 2 bytes	IN/OUT: 2 words each
4	SYNC2	V600-compatible Trigger Mode, 500-ms output time		
5	AUTO1	V600-compatible Auto Mode, 100-ms output time		
6	AUTO2	V600-compatible Auto Mode, 500-ms output time		
7	TEST	Communications test mode (checking operation for the ID Slave alone)		
8	NOISE	Noise measurement mode (measuring the noise environment around the Antenna)		
9	-	Do not set. (A mode setting error will occur.)		

CHECK! The V600-compatible modes (Trigger and Auto) can be used with the same I/O settings and control procedure as with the V600-HAM42-DRT.

CHECK! Turn the power OFF before setting the mode switch. The mode that is set when the power is turned ON will be used.

■ Node Address Switches

The node address switches set the node address of the ID Slave.

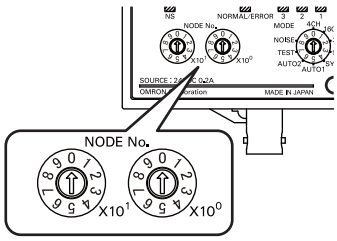

Item	Description
Setting method	Two-digit decimal number The left rotary switch sets the 10s digit, and the right rotary switch set the 1s digit.
Setting range	00 to 63 The default setting is 00.

CHECK! Node addresses between 64 and 99 can be set using the Configurator. Refer to the *DeviceNet Configurator Ver.2.□ OPERATION MANUAL* (Cat. No. W382-E1-□) for information on the setting procedure.

CHECK! Turn the power OFF before setting the node address switches. The node address that is set when the power is turned ON will be used.

■ DeviceNet Connector

The DeviceNet connector port connects the ID Slave to the DeviceNet Master Unit. Use the enclosed connector.

Enclosed connector model: FKC2.5/5-ST-5.08-RFAUM (Phoenix Contact)

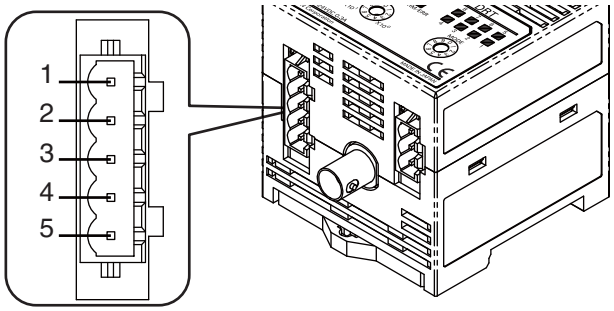

Pin No.	Name	Signal type
1	V–	Power supply negative side
2	CAN_L	Low communications data
3	Drain	Shield
4	CAN_H	High communications data
5	V+	Power supply positive side

■ Power Supply Connector

The power supply terminals supply 24-VDC power using the enclosed connector.

Enclosed connector model: FKC2.5/3-ST-5.08-RF (Phoenix Contact)

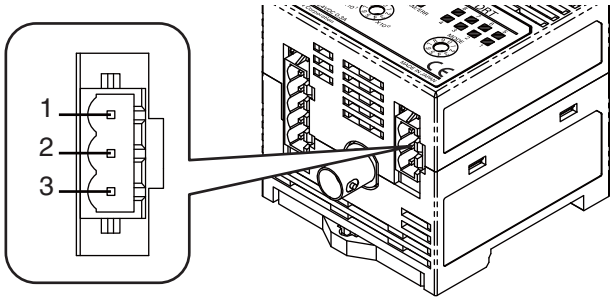

Pin No.	Name	Function
1	+24VDC	24-VDC input terminals
2	GND	
3	GR	Ground terminal

■ Antenna Connector

Connect this connector to the V680-series Antenna (V680-HS□□).

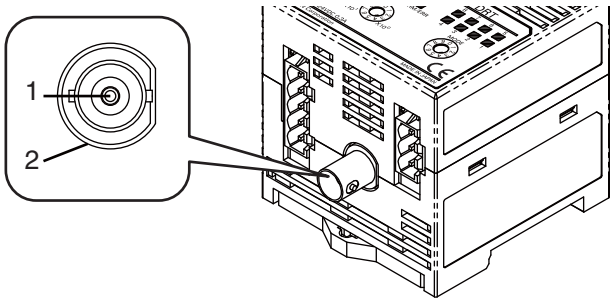

Pin No.	Name	Signal type
1	S	Signal line
2	GND	Analog ground

CHECK! Refer to *System Configuration* in *Section 1 Product Overview* for information on the Antennas that can be connected.

p.13

Antennas

■V680-HS51

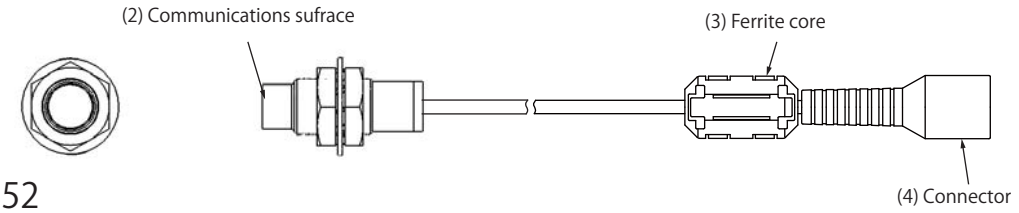

■V680-HS52

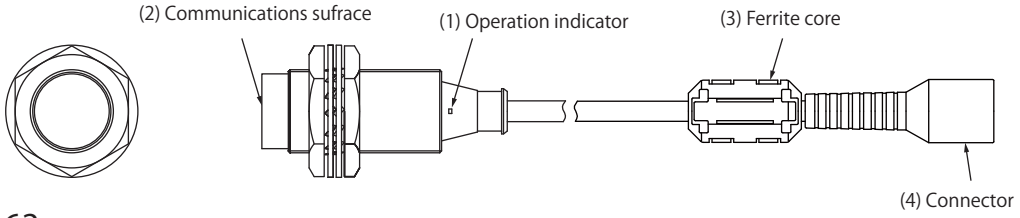

■V680-HS63

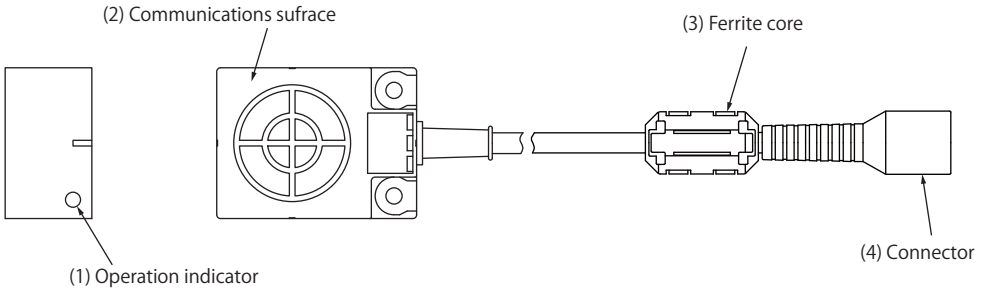

■V680-HS65

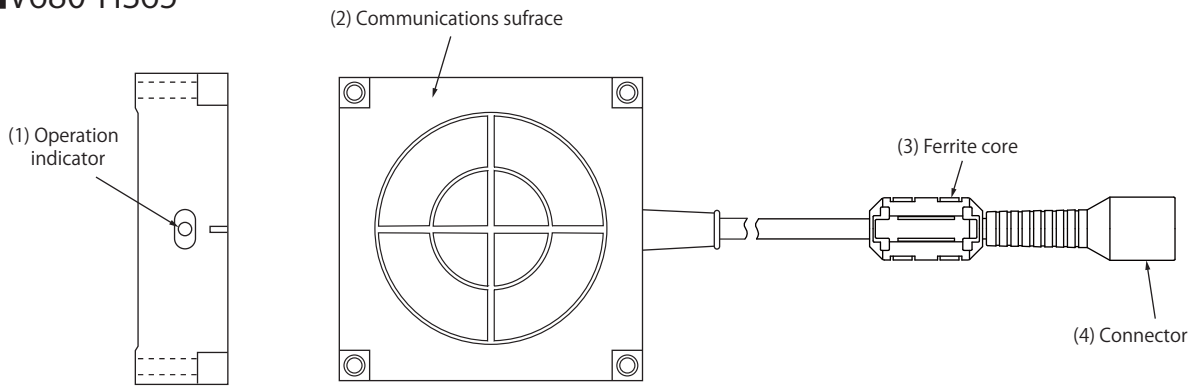

■V680-HS61

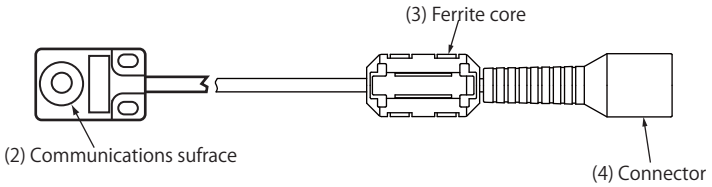

No.	Name	Description
1	Operation indicator	Lights when a signal is transmitted.
2	Communications surface	Mounted facing the RF Tags.
3	Ferrite core	
4	Connector	Connects to the ID Slave.

RF Tags

■ V680-D1KP52MT/-D2KF52M

■ V680-D1KP52M-BT01/-D2KF52M-BT01

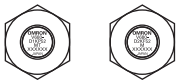

■ V680-D1KP52M-BT11/-D2KF52M-BT11

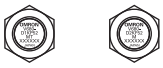

■ V680-D1KP53M

■ V680-D1KP54T

■ V680-D1KP66T/D1KP66MT

■ V680-D1KP66T-SP

■ V680-D1KP58HTN

The ID Slave communications with the RF Tags through the Antenna to read and write data in the internal memory of the RF Tags.
The printed side is the communications surface. Mount the RF Tags with the communications surfaces facing the Antenna.

■ V680-D2KF67/-D2KF67M

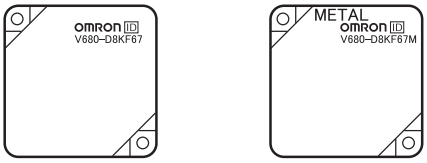

■ V680-D8KF68/-D32KF68

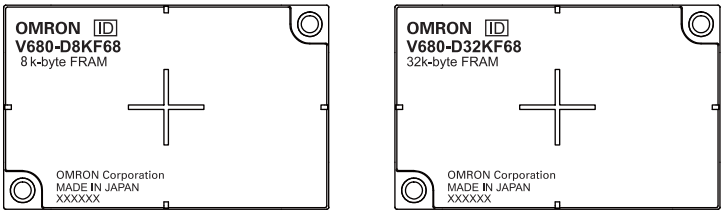

■ V680S-D2KF67/-D2KF67M

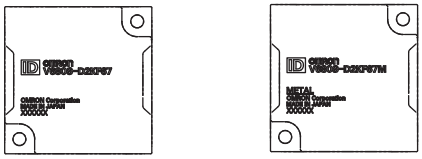

■ V680S-D2KF68/-D2KF68M

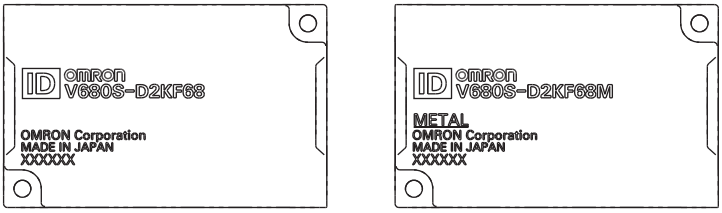

■ V680S-D8KF67/-D8KF67M

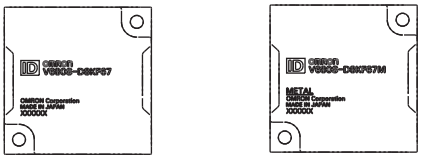

■ V680S-D8KF68/-D8KF68M

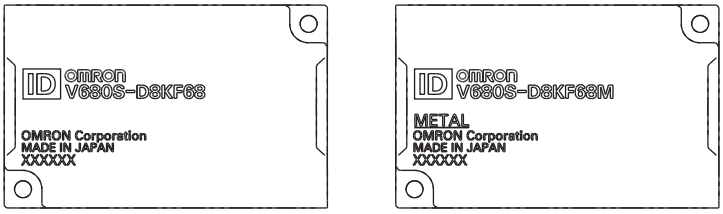

The ID Slave communications with the RF Tags through the Antenna to read and write data in the internal memory of the RF Tags.
The printed side is the communications surface. Mount the RF Tags with the communications surfaces facing the Antenna.

Section 3
Functions and Operation

ID Slave	24
RF Tags	30

ID Slave

Communications with RF Tags

With the ID Slave, the operating mode is set on the mode switch and the command is selected to communicate with the RF Tags.

■ Operating Mode

There are four operating modes.

CHECK! For the mode settings, refer to *Names and Functions of Components* in *Section 2*.

p.15

▪ Trigger Mode

When the RF Tag on a workpiece or palette moves within the interrogation zone of the Antenna, it is detected by a sensor or a switch. A control signal (trigger signal) is output from the PLC to the ID Slave, which triggers the ID Slave to begin communications with the RF Tag. The ID Slave reads the RF Tag data and outputs the results to the PLC.

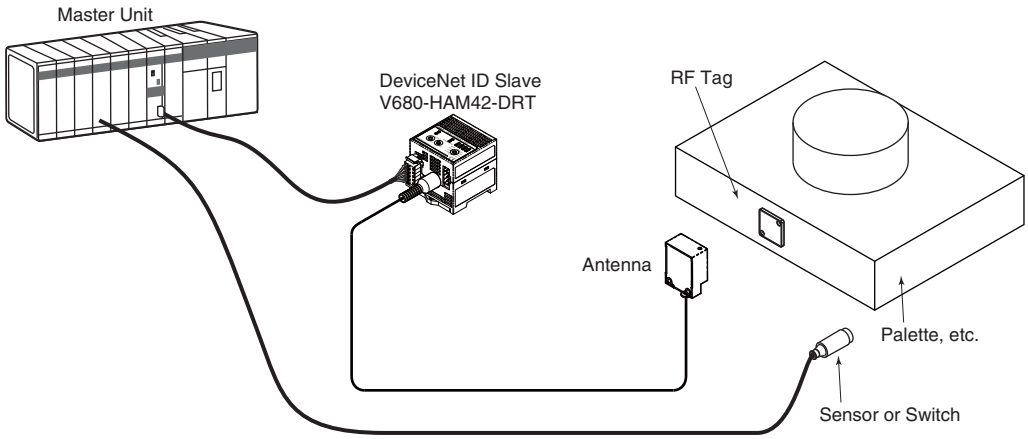

▪ Auto Mode

When the RF Tag of a workpiece or palette is within the interrogation zone of the Antenna, the ID Slave automatically begins communications with the RF Tag and outputs the result to the PLC.

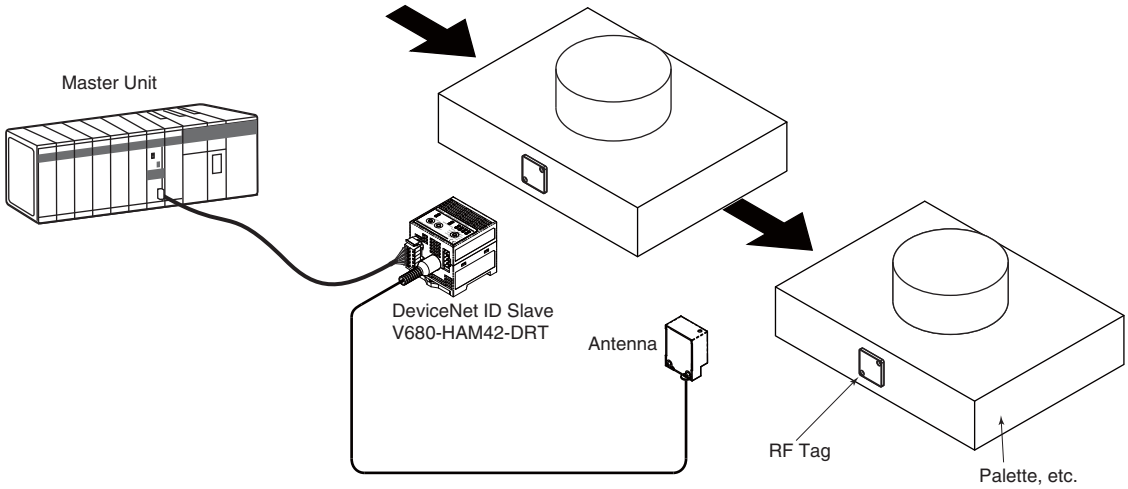

▪ Communications Test Mode

During system installation or maintenance, the mode switch can be set to 7 (Communications Test Mode) to read RF Tag data when the power supply is turned ON. The communications results are display on the operation indicators and the data/error code indicators.

CHECK! Refer to *RF Tag Communications Test Mode* in this section for information on test mode.

p.29

▪ Noise Measurement Mode

If communications with the RF Tags is unstable, set the mode switch to 8 (Noise Measurement Mode). When the power supply is turned ON, the noise around the Antenna will be measured, and the data will be shown on the indicators.

CHECK! Refer to *Noise Measurement* in this section for information on measuring noise.

p.28

■ Commands

Communications with the RF Tag is controlled by commands allocated to the ID Slave signals.

▪ Using 4-byte (4CH), 26-byte (16CH), and 58-byte (32CH) Access Modes

Command	Explanation
READ	Data in the RF Tag memory is read by specifying the memory of address and the number of bytes to process.
WRITE	Data is written to the RF Tag by specifying the memory address, number of bytes to process, and the data.
BIT SET	Bits in the RF Tag memory are set by specifying the memory address and number of bytes to process.
BIT CLEAR	Bits in the RF Tag memory are cleared by specifying the memory address and number of bytes to process.
DATA FILL	Based on the specified address, number of blocks to process, and data, the specified memory area of the RF Tag is filled with the same data.
NOISE MEASUREMENT	The strength of noise affecting the Antenna is measured.

CHECK! Noise measurement is not a command used for communications with RF Tag, but a command used for maintenance. Refer to *Noise Measurement* for details.

p.28

▪ Using V600-compatible Trigger(SYNC) Mode (SYNC1 and SYNC2)

Command	Explanation
READ/WRITE	Switches between the WRITE command and the READ command.
BYTE/BIT WRITE	Switches between the BYTE WRITE command and the BIT WRITE command (BIT SET, BIT CLEAR).
BIT SET/CLEAR	Switches between the BIT SET and the BIT CLEAR command when the BIT WRITE command is used.

▪ Using V600-compatible Auto Modes (AUTO1 and AUTO2)

Command	Explanation
READ/WRITE	Switches between the WRITE command and the READ command.
BYTE/BIT WRITE	Switches between the BYTE WRITE command and the BIT WRITE command (BIT SET, BIT CLEAR).
BIT SET/CLEAR	Switches between the BIT SET and the BIT CLEAR command when the BIT WRITE command is used.

CHECK! For the each mode and mode switch setting, refer to *Mode Switch* in *Section 2*.

p.15

■ Options

The following functions can be used with the ID Slave by setting the control signal options.

▪ Using 4-byte (4CH), 26-byte (16CH), and 58-byte (32CH)Access Modes

Function	Explanation
Communications Speed	The communications time required for writing large amounts of data to the RF Tag using the DATA FILL command can be reduced by setting the communications speed to high. Be aware that the noise resistance may be lower during communications when this function is being used. For details on the communications time, refer to *Communications Time (Reference)* . p.164
Verification	Select whether to enable or disable the verification function.
Write Protection	Important data stored in the memory of an RF Tag, such as the product model or type, can be protected from being overwritten inadvertently by enabling the Write Protection function. Refer to *Write Protection* for details. p.30
Output Time	When Auto Mode is being used, the result output time can be set to either 100 ms or 500 ms. Refer to *I/O Settings and Control Methods* for details on the output timing. p.73
Host Communications Mode	Trigger Mode or Auto Mode can be selected as the method for the communications with the PLC.
Read/Write Data Code	The number of bytes that can be accessed can be increased by converting the read/write data code from ASCII to hexadecimal if the data code in the RF Tag is ASCII.

▪ Using V600-compatible Trigger(SYNC) Modes (SYNC1 and SYNC2)

Function	Explanation
Output Time	The result output time can be set to either 100 or 500 ms. Refer to *I/O Settings and Control Methods* for details on output timing. p.73
Host Communications Mode	Trigger Mode can be selected as the method for the communications with the PLC.

▪ Using V600-compatible Auto Modes (AUTO1 and AUTO2)

Function	Explanation
Output Time	The result output time can be set to either 100 or 500 ms. Refer to *I/O Settings and Control Methods* for details on output timing. p.73
Host Communications Mode	Auto Mode can be selected as the method for the communications procedure with the PLC.

CHECK!

For the each mode and mode switch setting, refer to *Mode Switch* in *Section 2*.

p.15

Noise Measurement

You can check whether noise that affects communications with RF Tags exists in the area where the Antenna and ID Slave are installed.
When a noise measurement command is sent from the PLC, the noise strength received by the Antenna is output in a value from 00 to 63 hex.
The measured noise strength is also displayed in five levels on the data indicators, and so it can be checked directly on the ID Slave.

CHECK! Refer to *NOISE MEASUREMENT* for details of the noise measurement command.

p.69

■ Relation between Result Output and Data Indicators

Result output	Data indicator status	Result output	Data indicator status
00 to 09	7 6 5 4 □ □ □ □ □ □ □ □ 3 2 1 0	30 to 39	7 6 5 4 □ ■ ■ ■ □ ■ ■ ■ 3 2 1 0
10 to 19	7 6 5 4 □ □ □ ■ □ □ □ ■ 3 2 1 0	40 to 99	7 6 5 4 ■ ■ ■ ■ ■ ■ ■ ■ 3 2 1 0
20 to 29	7 6 5 4 □ □ ■ ■ □ □ ■ ■ 3 2 1 0	Note: Result output is a decimal conversion value. □: OFF ■: ON	

■ Influence of Noise on Result Output and Communications Range (Reference Information)

CHECK! The values given for the influence of the noise level obtained from noise measurement and the communications range are for reference only. The results depend on the type of Antenna and RF Tag used, and differences in the noise environment. Be sure to check carefully when installing the system.

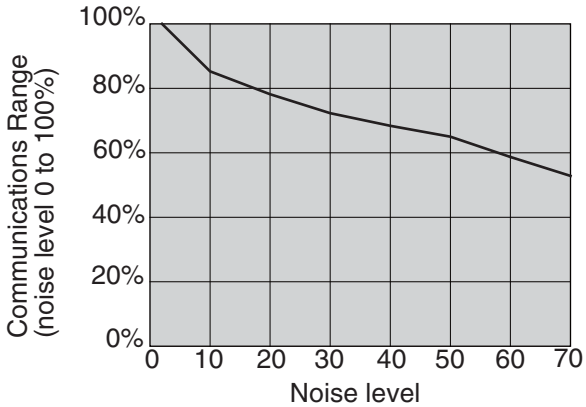

▪ Measurement Conditions

Antenna : V680-HS63
RF Tag : V680-D1KP66T(non-metallic mounting)
Command 4-byte write

RF Tag Communications Test Mode

The status of communications with RF Tags can be checked without performing any operations at the host. Set the mode switch to 7 to enter RF Tag Communications Test Mode. The mode will not changed if the mode switch is set after the power is turned ON. Communications with the host will go offline. In RF Tag Communications Test Mode, the communications results will be displayed on the operation indicators and data/error code indicators, as shown in the following table.

Indicator	Normal Completion RF Tag communications	Error completion for RF Tag communications
T/R	Lit yellow during RF Tag communications	Lit yellow during RF Tag communications
NORMAL/ERROR	Lit green	Lit red
Data/Error code	Lights when the first byte of data is read.	One indicator flashes red when an RF Tag communications error occurs.

CHECK!

For details on the error codes, refer to *Handling Errors Section 6 Troubleshooting*.

p.84

RF Tags

Write Protection

The write protection function protects important data stored in the memory of a RF Tag, such as the product model or type, from being overwritten inadvertently.
Enable the write protection function after writing important data as described in this section.

■ Using 4-byte (4CH), 26-byte (16CH), and 58-byte (32CH) Access Mode

▪ Setting Write Protection

For the write protection function to be effective, it must be enabled or disabled in both the ID Slave settings and the RF Tag settings.

1. Enabling the Write Protection for the ID Slave

The write protection function can be enabled or disabled by setting the W PROTECT bit of the ID Slave in the I/O Allocation Table.
In the V600 compatible mode setting, write-protection is always enabled.

CHECK! Refer to the *Signal Names and Functions* for details.

p.61

2. Setting Write Protection in RF Tags

Write protection for individual RF Tags is set in the most significant bit of address 0000 hex.
Write protection is set in the 4 bytes from RF Tag address 0000 hex to 0003 hex.

Address / Bit	7	6	5	4	3	2	1	0
0000 hex	Enable/disable	Upper two digits of start address (00 to 7F)						
0001 hex	Lower two digits of start address (00 to FF)							
0002 hex	Upper two digits of end address (00 to FF)							
0003 hex	Upper two digits of end address (00 to FF)							

- Write-protect bit (Most Significant Bit of Address 0000 hex)
  1: Write-protected (Enable)
  0: Not write-protected (Disable)

- Addresses in RF Tag Memory That Can Be Write Protected
  Start address: 0000 hex to 7FFF hex
  End address: 0000 hex to FFFF hex

CHECK! The RF Tag write protection setting area (addresses 0000 hex to 0003 hex) can be used as user memory if the write protection function is not used. To use the RF Tag's write protection setting area (addresses 0000 hex to 0003 hex) as user memory, be sure to disable write protection by setting the W PROTECT Bit in the ID Slave.

▪ Example of Write Protection

Start Address is Lower Than the End Address

The memory area between the start address and end address will be write-protected.

Address / Bit	Upper digits				Lower digits			
0000 hex	1	0	0	0	0	0	0	0
	8				0			
0001 hex	0	0	0	1	0	1	0	1
	1				5			
0002 hex	0	0	0	0	0	0	0	1
	0				1			
0003 hex	0	0	1	0	0	0	0	0
	2				0			

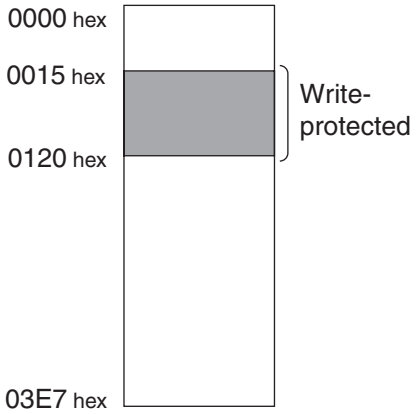

Start Address is Equal to End Address

Only the selected address (one byte) will be write-protected.

Address / Bit	Upper digits				Lower digits			
0000 hex	1	0	0	0	0	0	0	0
	8				0			
0001 hex	0	0	1	0	0	0	0	1
	2				1			
0002 hex	0	0	0	0	0	0	0	0
	0				0			
0003 hex	0	0	1	0	0	0	0	1
	2				1			

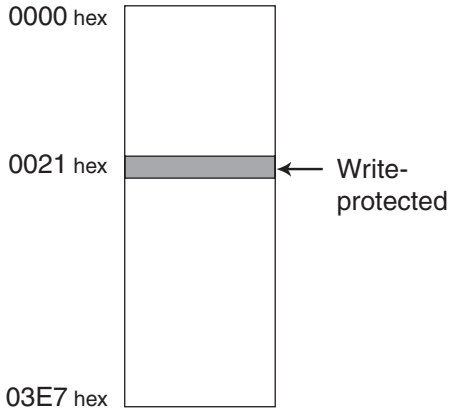

End Address is Higher than the Last RF Tag Address

The memory area between the start address and the last RF Tag address will be write-protected.

Address / Bit	Upper digits				Lower digits			
0000 hex	1	0	0	0	0	0	1	1
	8				3			
0001 hex	0	0	0	0	0	0	0	0
	0				0			
0002 hex	0	0	0	0	0	0	1	1
	0				3			
0003 hex	1	1	1	1	1	1	1	1
	F				F			

Start Address is Higher Than End Address
The memory area between the start address and the last RF Tag address, as well as the area between 0004 hex and the end address will be write-protected.

Address / Bit	Upper digits				Lower digits			
0000 hex	1	0	0	0	0	0	0	1
	8				1			
0001 hex	0	0	1	0	0	0	0	0
	2				0			
0002 hex	0	0	0	0	0	0	0	0
	0				0			
0003 hex	0	0	0	1	0	1	0	1
	1				5			

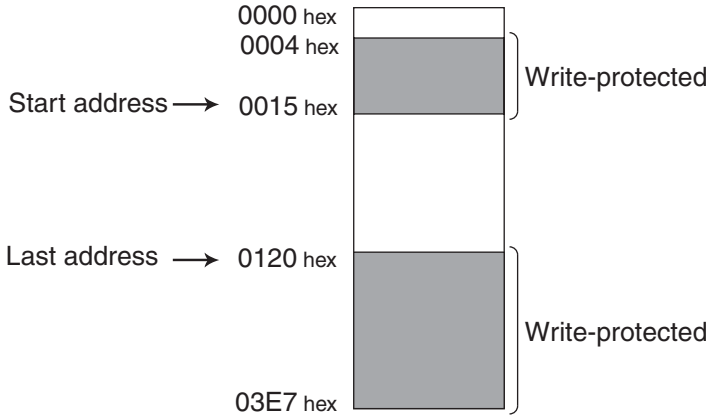

▪ Disabling Write Protection

Disabling Write Protection for Part of the RF Tags
Set the uppermost bit of 0000 hex to 0.

Disabling All Write Protection for the Whole RFID system
Set the Write Protection Enable Bit to 1 in the ID Slave.

CHECK!

Caution When Using Write Protection
The write protection function is a ID Slave function. It cannot be used with the reader/writer manufactured by other companies.

■ Using V600-compatible Modes (SYNC1, SYNC2, AUTO1, AUTO2)

The write protection for V680-compatible modes (SYNC1, SYNC2, AUTO1, AUTO2) operates with the same method as the V600 (the previous model).
The V600 write protection function has two setting methods depending on the type of RF Tag. Use the following procedure to make the settings for each write protection method.

▪ V680-D1KP□□

Setting Write Protection

When the write end address is written to the address 0000 hex of the RF Tag, the area from the address 0001 hex to the end address will be write-protected.
The most significant bit of the address 0000 hex is used to enable and disable write protection. therefore, addresses 0080 hex to 03E7 hex will be write-protected.

Address Bit	7	6	5	4	3	2	1	0
0000 hex	Enable/Disable	End address						

- The most significant bit of address 0000 hex is the Write-protect Bit.
  1: Enable write protection.
  0: Disable write protection.

- End Address Setting Range
  End address: 00 hex, 01hex to 7Fhex

Write Protection Setting Example
Write Protecting Addresses 0001 hex to 0012 hex

Address Bit	7	6	5	4	3	2	1	0
0000 hex	1	0	0	1	0	0	1	0
	9				2			

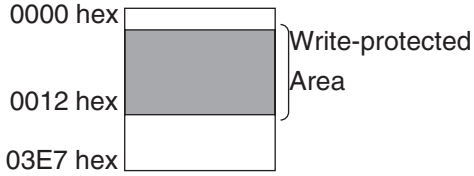

Setting 00 hex as the End Address:
All addresses except address 0000 hex will be write-protected.

Address Bit	7	6	5	4	3	2	1	0
0000 hex	1	0	0	0	0	0	0	0
	8				0			

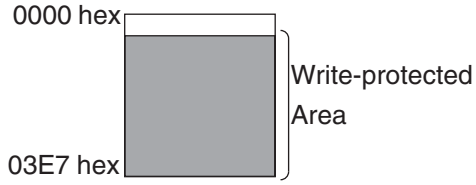

Disabling Write Protection

To cleare write protection when it has been set, turn OFF the most significant bit of address 0000 hex. Write protection will be cleared and the start and end addresses set in addresses 0000 hex will be disabled.

CHECK!

Write Protection Precautions
- Address 0000 hex is never write-protected.
- The write protection start address is always 0001 hex. Therefore, write the data to be write-protected to an address higher than 0001 hex.

▪ V680-D□KF6□ / V680S-D□KF6□

Setting Write Protection

Write protection is set in the 4 bytes of RF Tag addresses 0002 to 0005 hex.

The setting for the most significant bit of address 0002 hex enables or disables write protection for the RF Tag.

- The most signficant bit of address 0002 hex is the Write-protect Bit.
  1: Enable write protection.
  0: Disable write protection.

Setting Area Memory Map for RF Tag Write Protection

Address Bit	7	6	5	4	3	2	1	0
0002 hex	Enable/Disable	Upper two digits of start address (00 to 7F)						
0003 hex	Lower two digits of start address (00 to FF)							
0004 hex	Upper two digits of end address (00 to FF)							
0005 hex	Upper two digits of end address (00 to FF)							

- Write Protection Setting Ranges
  Start address: 0006 hex to 7FFF hex
  End address: 0006 hex to FFFF hex

CHECK!

The write protection setting area of the RF Tag cannot be write-protected.

▪ Write Protection Setting Example

Start Address Lower Than the End Address

The memory area between the start address and end address will be write-protected.

Address	Bit	Upper digits				Lower digits			
0002 hex		1	0	0	0	0	0	0	0
		8				0			
0003 hex		0	0	0	1	0	1	0	1
		1				5			
0004 hex		0	0	0	0	0	0	0	1
		0				1			
0005 hex		0	0	1	0	0	0	0	0
		2				0			

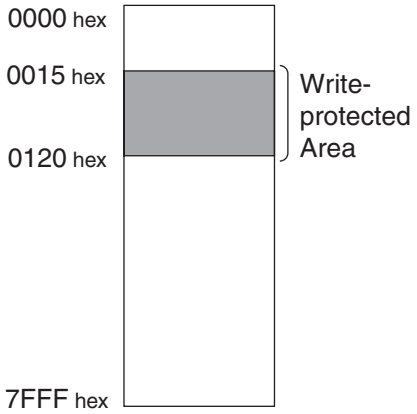

Start Address Equal to End Address

Only the selected address (one byte) will be write-protected.

Address	Bit	Upper digits				Lower digits			
0002 hex		1	0	0	0	0	0	0	0
		8				0			
0003 hex		0	0	1	0	0	0	0	1
		2				1			
0004 hex		0	0	0	0	0	0	0	0
		0				0			
0005 hex		0	0	1	0	0	0	0	1
		2				1			

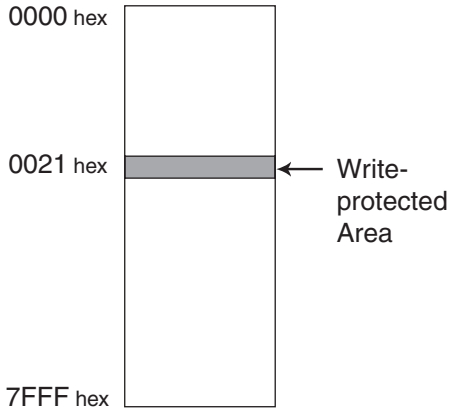

End Address Higher than the Last RF Tag Address

The memory area between the start address and the last RF Tag address will be write-protected.

Address	Bit	Upper digits				Lower digits			
0002 hex		1	0	0	0	0	0	1	1
		8				3			
0003 hex		0	0	0	0	0	0	0	0
		0				0			
0004 hex		0	0	0	0	0	0	1	1
		0				3			
0005 hex		1	1	1	1	1	1	1	1
		F				F			

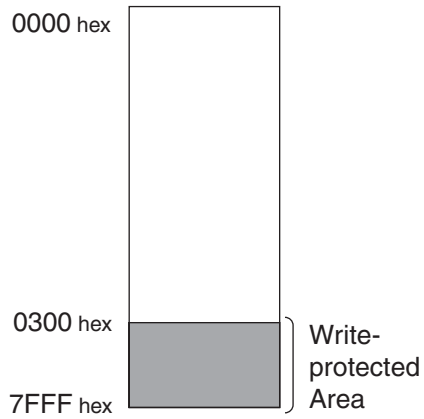

Start Address Higher Than End Address

The memory area between the start address and the last RF Tag address, as well as the area between 0006 hex and the end address will be write-protected.

Address / Bit	Upper digits				Lower digits			
0002 hex	1	0	0	0	0	0	0	1
	8				1			
0003 hex	0	0	1	0	0	0	0	0
	2				0			
0004 hex	0	0	0	0	0	0	0	0
	0				0			
0005 hex	0	0	0	1	0	1	0	1
	1				5			

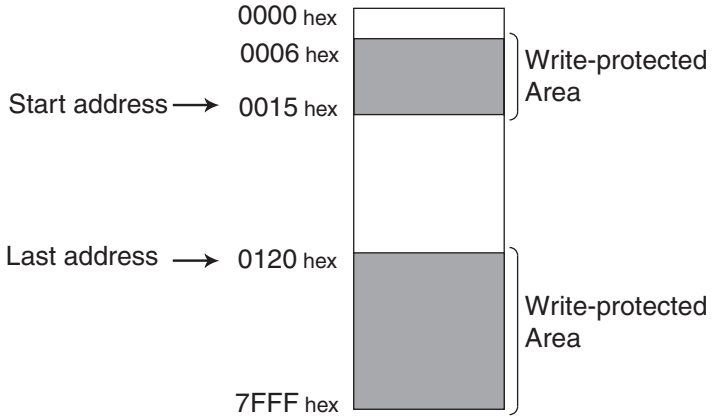

Section 4
Installation, Connections, and Wiring

Installing ID Slave	38
Installing Antennas	44
Installing RF Tags	47

Installing ID Slave

Installation

To ensure full functionality of the V680-HAM42-DRT DeviceNet ID Slave, follow the instructions provided in this section for installation.

■ Installation Site

Do not install the ID Slave in the following locations.

- Locations exposed to ambient temperatures that are not between –10 and 55°C or where there are radical temperature changes resulting in condensation
- Locations exposed to humidity that is not between 25% and 85%
- Locations subject to corrosive gas, flammable gas, dust, salt, or metal powder
- Locations that will expose the ID Slave to direct vibration or shock
- Locations exposed to direct sunlight
- Locations exposed to spray of water, oil, or chemicals
- Locations more than 2,000 m above sea level

■ Mounting in a Panel

The ID Slave can be used at an ambient temperature range of –10 to 55°C. Be sure to observe the following precautions.

- Make sure that the Unit is provided with sufficient ventilation space.
- Do not install the Unit close to heaters, transformers, or large-capacity resistors that radiate excessive heat.

■ Installation Method

▪ Mounting to DIN Track

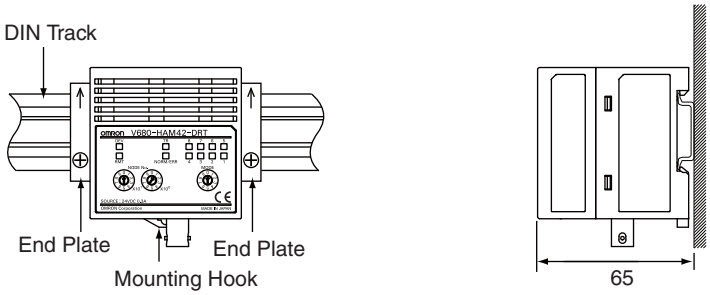

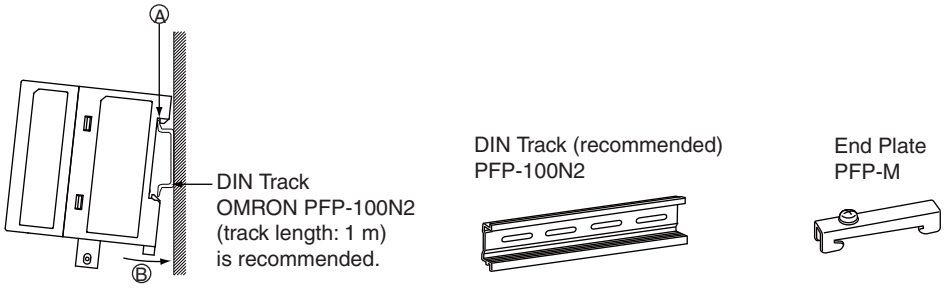

1. First hook the ID Slave to part A, then press it in direction B to mount it to the DIN Track.
2. To disconnect the ID Slave from the DIN Track, pull the mounting hook downwards, and then lift the ID Slave upwards.

CHECK!

Attaching the End Plates

To mount an End Plate easily, first hook the bottom of the End Plate and then hook the top on the DIN Track, pull the End Plate downwards and tighten the screw.

Recommended tightening torque: 1.2 N·m.

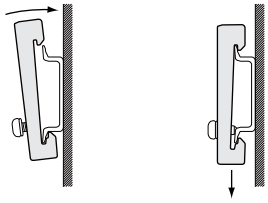

■ Mounting Interval

The V680-HAM42-DRT DeviceNet ID Slaves will generate heat if they are mounted side-by-side. Leave space between the ID Slave of at least 10 mm.

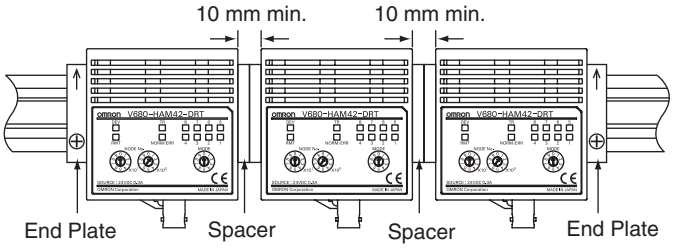

Use at least 2 OMRON DIN Track Spacers. (Each Spacer is 5 mm wide.)

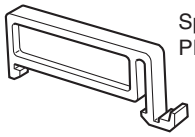

Connection and Wiring

■ DeviceNet Remote Connector

Use the connector that comes with the Unit. You must provide the connecting cable.

		Brand	Model	Note
Cable		OMRON	DCA1/DAC2-5C10	1.0 mm² (equivalent to AWG18)
Connector		Phoenix Contact	FKC2.5/5ST5.08RFAUM	---
Crimp Terminal	When one line is connected to one terminal		AI1-10RD	---
	When two lines are connected to one terminal		AI-TWIN2 × 1-10RD	---
Crimping Tool			CRIMPFOX UD6	---

1. Attach the crimp terminals to the sections of the cable where the sheath has been stripped.

2. Make sure the connector is facing the right direction and insert each crimp terminal into the correct connector hole.

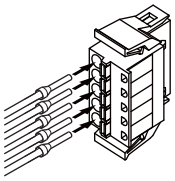

3. Once all of the cables have been connected to the connector, attach the connector to the ID Slave.

Align the cable connector with the connector on the ID Slave. Hold the connector body and push the connector firmly into place.

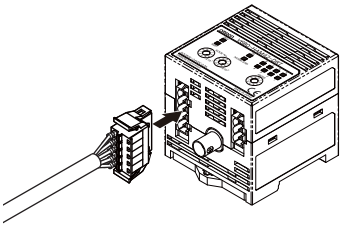

CHECK!

Removing the Connector

Remove the connector by pressing in on the lock on the cable connector to release the lock and pulling the connector straight out. If the connector is difficult to remove, press on the ID Slave while pulling on the connector.

CHECK!

Do not connect cables to the connector after attaching the connector to the ID Slave.

■ Power Supply Connector

Use the enclosed connector. The user must provide the cable.

		Brand	Model	Note
Cable	Power line	---	---	1.0 mm² (equivalent to AWG18)
Connector		Phoenix Contact	FKC2.5/3-ST-5.08-RF	---
Crimp Terminal	When one line is connected to one terminal		AI1-10RD	---
	When two lines are connected to one terminal		AI-TWIN2 × 1-10RD	---
Crimping Tool			CRIMPFOX UD6	---

1. Attach the crimp terminals to the sections of the cable where the sheath has been stripped.

2. Make sure the connector is facing the right direction and insert each crimp terminal into the correct connector hole.

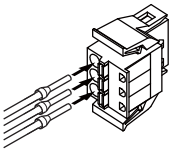

3. Once all of the cables have been connected to the connector, attach the connector to the ID Slave.

Align the cable connector with the connector on the ID Slave. Hold the connector body and push the connector firmly into place.

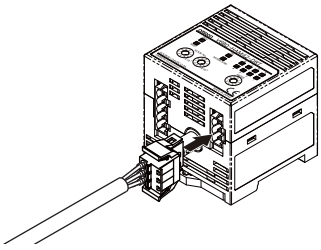

CHECK!

Removing the Connector

Remove the connector by pressing in on the lock on the cable connector to release the lock and pulling the connector straight out. If the connector is difficult to remove, press on the ID Slave while pulling on the connector.

CHECK!

Do not connect cables to the connector after attaching the connector to the ID Slave.

CHECK!

Use the recommended Power Supply (S8VS-03024, OMRON).

▪ To reduce the influence of radiated noise, use a ferrite core.

Use the following procedure.

1. Wire the power supply and ground lines as normal.

2. Wrap the power supply lines and ground line together around the ferrite core. Loop them around the ferrite core once so that the ferrite core does not move. The ferrite core should be within 10 cm of the ID Slave.

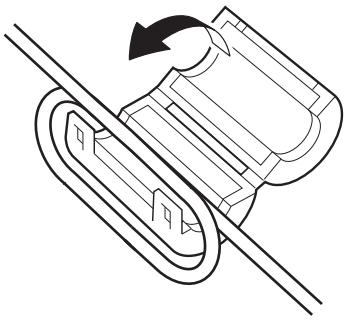

3. Close the ferrite core until you hear it click into place.

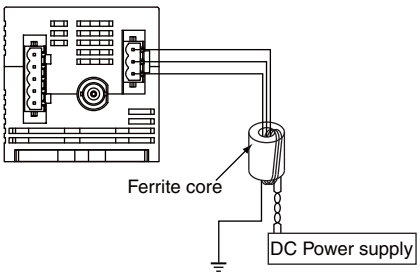

■ Antenna Connector

▪ Mounting the Antenna

1. Hold the connector part of the Antenna and insert it into the Antenna port while matching the key on the Unit with the groove on the connector.

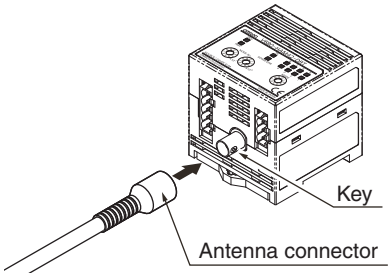

2. Turn the connector clockwise to lock it in place.

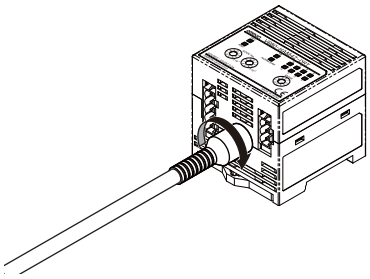

▪ Removing the Antenna

1. Turn the connector in counterclockwise to release the lock.

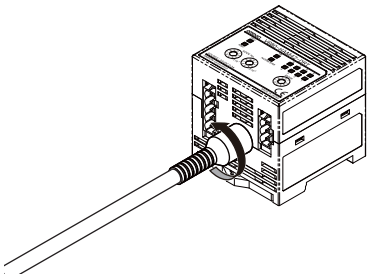

2. Pull the connector straight out of the port.

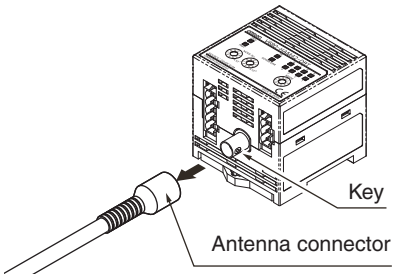

CHECK!

The connector cannot be removed without turning it to release the lock. If the cable is pulled without releasing the lock, it may cause the cable or wires to break. Make sure that the lock is released before pulling out the connector.

Installing Antennas

V680-HS51

Install the Antenna using the nuts and toothed washer that are provided on both sides of the mounting material, as shown in the diagram below.

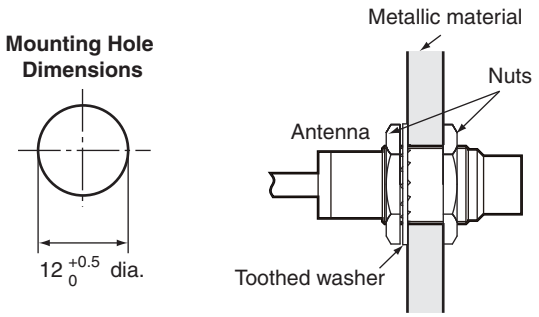

CHECK! Securely tighten the screws to a torque of 6 N·m.

V680-HS52

Install the Antenna using the nuts and toothed washer that are provided on both sides of the mounting material, as shown in the diagram below.

CHECK! When the Antenna is mounted to a metallic material, the communications range will be reduced by approximately 10% compared with mounting to a non-metallic material. For details on the effect of metal surrounding the Antenna, refer to *Effect of Surrounding Metals on the Antenna (Reference)*.
p.168

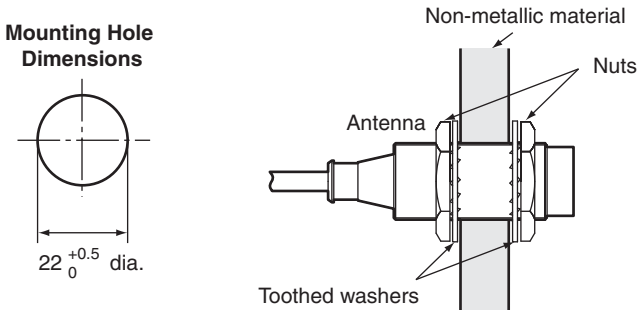

CHECK! Securely tighten the screws to a torque of 40 N·m.

V680-HS61

■ Installation from the Front

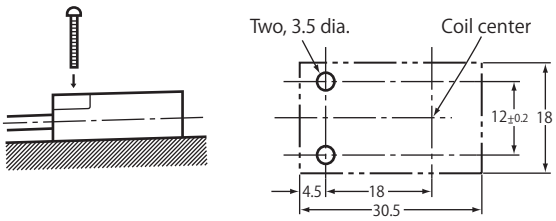

Securely tighten screws to a torque of 0.98 N•m.

V680-HS63

■Installation from the Front

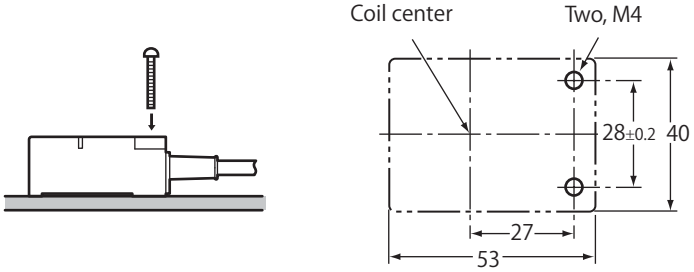

■Installation from the Back

Insert the nuts that come with the Antenna into sections A.

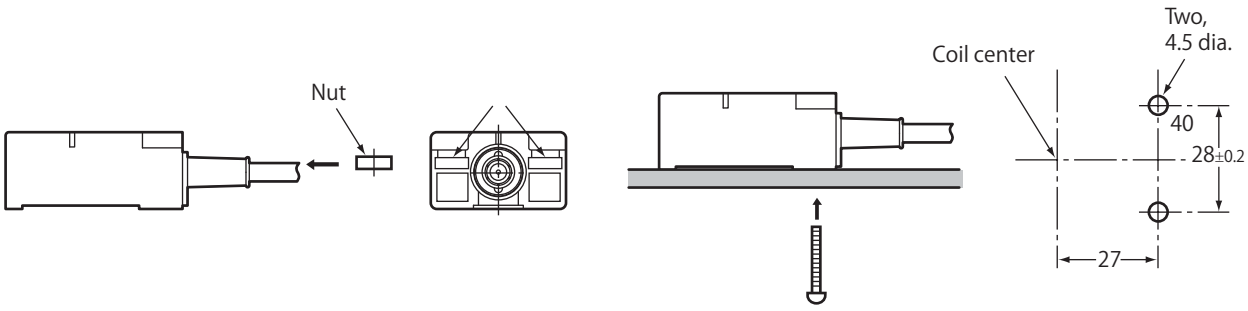

Securely tighten screws to a torque of 1.2 N·m.

V680-HS65

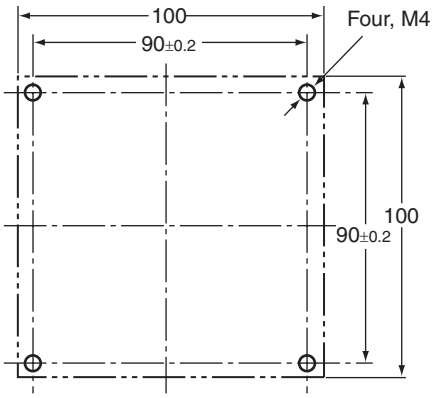

Use M4 screws and spring washers (in four places) for Antenna installation.

CHECK!

Securely tighten screws to a torque of 0.7 to 1.2 N·m.

■ Mounting Bracket Dimensions (Provided Only with the V680-HS65)

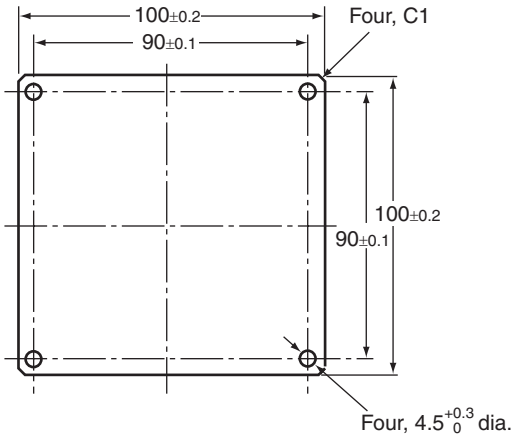

Note: When installing the Antenna, mount it on the enclosed Mounting Bracket. The Mounting Bracket is not necessary, however, if the Antenna is mounted on a metal base that is larger than the Antenna (100 × 100 mm).

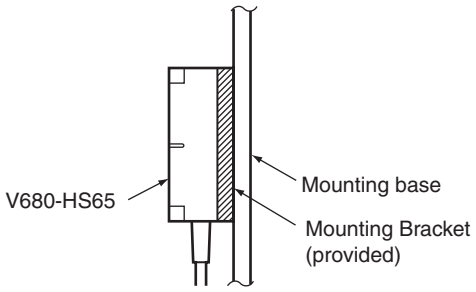

Installing RF Tags

V680-D1KP52MT

■ RF Tag Installation

Mount RF Tags as shown in the diagram on the right. The epoxy adhesives listed in the following table are recommended for the given temperature ranges.

Ambient operating temperature	Product name	Manufacturer
–40 to 70°C	Two-part Epoxy-compound Resin: TB2001 (main agent)/TB2105C (curing agent)	Three Bond Co., Ltd.
	One-part Moisture-curing Elastic Adhesive TB1530	Three Bond Co., Ltd.
–40 to 150°C	One-part Epoxy Resin: TB2285	Three Bond Co., Ltd.
	Two-part Epoxy Resin: TB2087	Three Bond Co., Ltd.

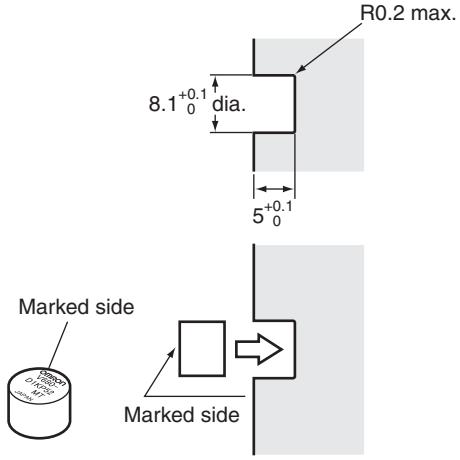

CHECK! When embedding the V680-D1KP52MT into a metal surface, use the V680-HS51/-HS52 Antenna. Communications will not be possible if the V680-HS63 Antenna is used.

CHECK! Refer to *Differences in Surrounding Metals(Reference)* in *Section 7 Appendices* for information on the effect of metal behind the V680-D1KP52MT.
p.171

V680-D1KP52M-BT01/-D1KP52M-BT11

■ RF Tag Installation

1. Turn the RF Tag clockwise, attach to the Mounting holes.

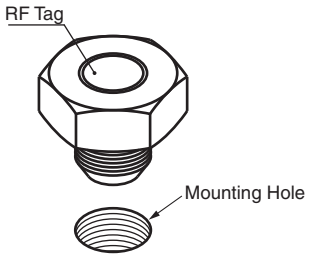

CHECK! V680-D1KP52M-BT01 is attached to the mounting holes in the M10, V680-D1KP52M-BT11 to the mounting holes in the M8.

2. Secure by tightening the bolts of the RF Tag.

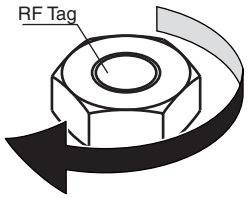

CHECK! When mounting the RF Tags, tighten the bolts to the following torques.
V680-D1KP52M-BT01: 24.5 N·m
V680-D1KP52M-BT11: 11 N·m

V680-D1KP53M

■ RF Tag Installation Direction

Mount the RF Tags as shown in the diagram on the right. The epoxy adhesives listed in the following table are recommended for the given temperature ranges.

Ambient operating temperature	Product name	Manufacturer
–40 to 70°C	Two-part Epoxy-compound Resin: TB2001 (main agent)/ TB2105C (curing agent)	Three Bond Co., Ltd.
	One-part Moisture-curing Elastic Adhesive TB1530	Three Bond Co., Ltd.
–40 to 150°C	One-part Epoxy Resin: TB2285	Three Bond Co., Ltd.
	Two-part Epoxy Resin: TB2087	Three Bond Co., Ltd.

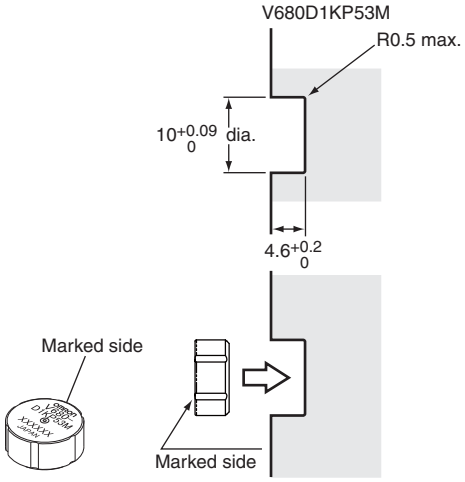

CHECK! When embedding the V680-D1KP53M into a metal surface, use the V680-HS51/-HS52 Antenna. Communications will not be possible if the V680-HS63 Antenna is used.

CHECK! Refer to *Differences in Surrounding Metals(Reference)* in *Section 7 Appendices* for information on the effect of metal behind the V680-D1KP53M.
p.174

V680-D1KP54T

■ RF Tag Installation Direction

It is recommended that the RF Tag be mounted either by using the special V700-A80 Attachment or by using an adhesive.

▪ Installation by V700-A80 Attachment

1. Insert the coin-shaped RF Tag into the Attachment.
   The coin-shaped RF Tag has no directionality, so it can be faced in any direction.

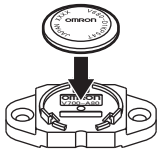

CHECK! Do not repeatedly insert and remove the RF Tag from the Attachment. Doing so an loosen the fit of the RF Tag and break the Attachment clasps. In case it should become necessary to remove an RF Tag once it has been inserted, do so by inserting a flat-blade screwdriver into the space between the Attachment and the RF Tag at the bottom of the Attachment. Do not use bare hands to remove the RF Tag, or the RF Tag may be damaged.

2. Use M3 screws to fasten the Attachment, and tighten the screws to a torque of 0.3 to 0.5 N·m.

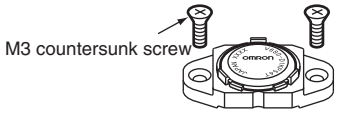

Mounting hole dimensions

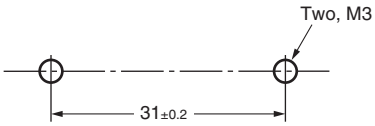

▪ Installation by adhesive

Please select the adhesive matched to the bonded material. And defend decided dosage and usage. And confirm and use the tidy fixation.

Because the material of RF Tag is PPS resin, the epoxy-based adhesives are recommended to bonding to the metal and the rigid plastic.

The epoxy adhesives listed in the following table are recommended for the given temperature ranges.

Ambient operating temperature	Product name	Manufacturer
-40 to 70°C	Two-part Epoxy-compound Resin: TB2001 (main agent)/TB2105C (curing agent)	Three Bond Co., Ltd.
	One-part Moisture-curing Elastic Adhesive TB1530	Three Bond Co., Ltd.
–40 to 110°C	Two-part Epoxy Resin: EP001	CEMEDINE Co., Ltd.
-40 to 150°C	One-part Epoxy Resin: TB2285	Three Bond Co., Ltd.
	Two-part Epoxy Resin: TB2087	Three Bond Co., Ltd.

CHECK! If the part to be bonded is made of polyethelene, polypropylene, or a Fluorine Resin-based or silicon-based resin, the above adhesive may not have sufficient.

V680-D1KP66T

■ Mounting on Non-metallic Material

Mount the RF Tag using M3 pan-head screws from the marked side.
Tightening torque: 0.3 to 0.5 N·m

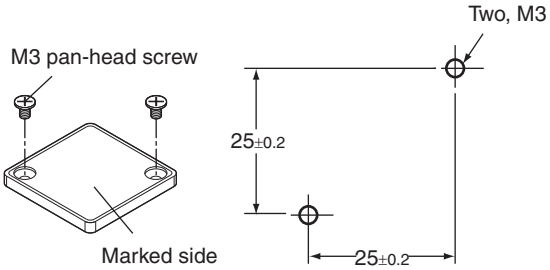

■ Mounting on Metallic Material

The communications range will decrease if there is metal at the back of the V680-D1KP66T RF Tag.
If the RF Tag is mounted to metallic material, use the separately sold Special Attachment (V600-A86) or a non-metallic spacer (e.g., plastic or resin).

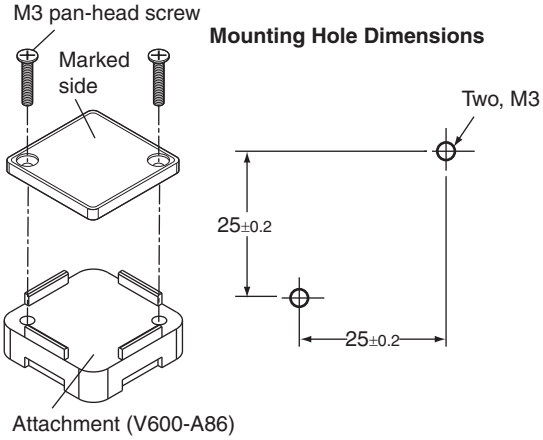

CHECK! Refer to *Effect of Metal on Back of RF Tags (Reference)* in *Section 7 Appendices* for information on the effect of metal behind the V680-D1KP66T.
p.178

V680-D1KP66MT

Mount the RF Tag to metal using M3 pan-head screws from the marked side. Tighten the screws to a torque of 0.3 to 0.5 N·m.

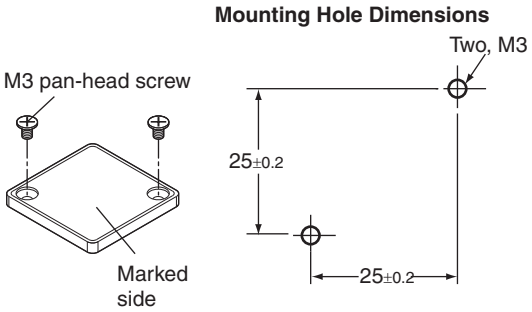

CHECK! Refer to *Effect of Surrounding Metals (Reference)* in *Section 7 Appendices* for information on the effect of metal behind the V680-D1KP66MT.
p.180

V680-D1KP66T-SP

Mount the RF Tag using M5 screws and washers. Tighten the screws to a torque of 1.2 N·m. The installation direction of RF Tags is not restricted by the travel direction in respect to the Antenna.

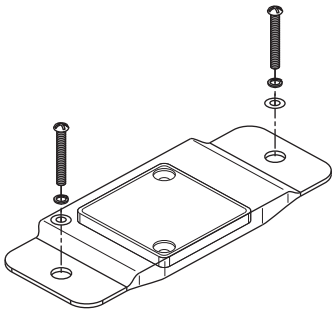

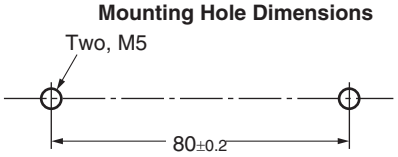

CHECK! Refer to *Effect of Metal on Back of RF Tags (Reference)* in *Section 7 Appendices* for information on the effect of metal behind the V680-D1KP66T-SP.
p.182

V680-D1KP58HTN

■ RF Tag Installation Direction

The RF Tags have a limited life span. Therefore, install them in locations in which they can be easily replaced. Use the following procedure to mount the V680-A80 Attachment when required.

1. Mount the Attachment to the workpiece.

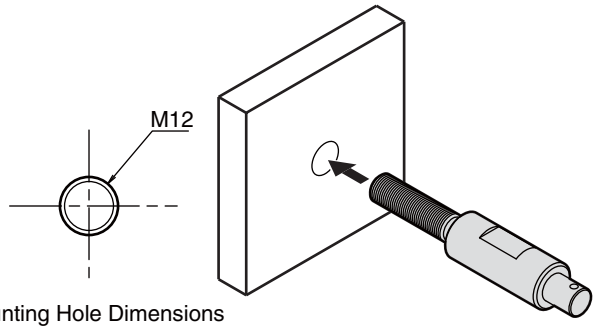

2. Tighten the lock nut.

CHECK! Use a tightening torque of 21 to 42 N·m.

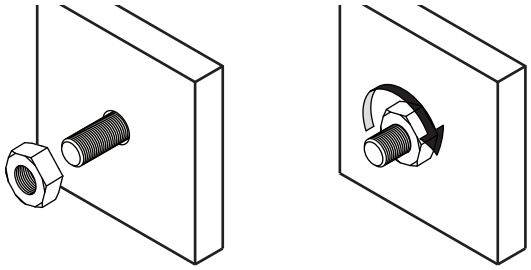

3. Mount the RF Tag to the Attachment.

CHECK! The RF Tag can be mounted in either direction.

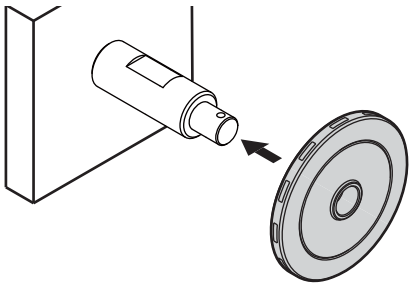

Insert the split pin into the 3.2-dia. hole and open the tip of the pin to secure.

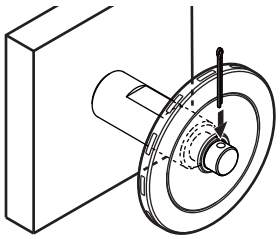

CHECK! Two nuts and one split pin are provided with the V680-A80 Attachment. Replacement split pins must be provided by the user.

Split pin	Nominal: 3.2 mm × 20 mm (length)

V680-D2KF52M

■ RF Tag Installation

Mount RF Tags as shown in the diagram on the right.
The epoxy adhesives listed in the following table are recommended for the given temperature ranges.

Ambient operating temperature	Product name	Manufacturer
–40 to 70°C	Two-part Epoxy-compound Resin: TB2001 (main agent)/TB2105C (curing agent)	Three Bond Co., Ltd.
	One-part Moisture-curing Elastic Adhesive TB1530	Three Bond Co., Ltd.
–40 to 85°C	One-part Epoxy Resin: TB2285	Three Bond Co., Ltd.
	Two-part Epoxy Resin: TB2087	Three Bond Co., Ltd.

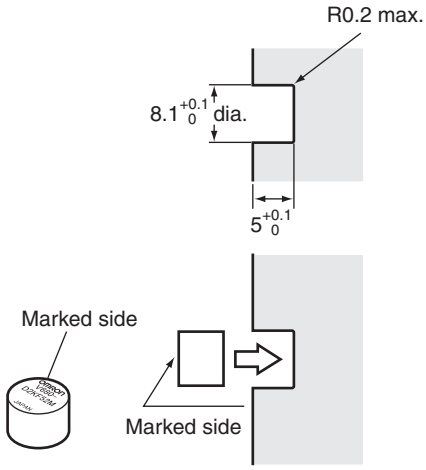

CHECK! When embedding the V680-D2KF52M into a metal surface, use the V680-HS51/-HS52 Antenna. Communications will not be possible if the V680-HS63 Antenna is used.

CHECK! Refer to *Differences in Surrounding Metals* in *Section 7 Appendices* for information on the effect of metal behind the V680-D2KF52MT.
p.187

V680-D2KF52M-BT01/-D2KF52M-BT11

■ RF Tag Installation

1. Turn the RF Tag clockwise, attach to the Mounting holes.

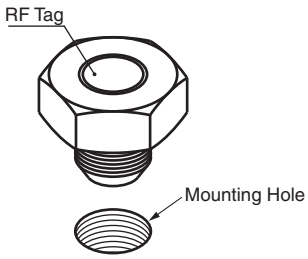

CHECK! V680-D2KF52M-BT01 is attached to the mounting holes in the M10, V680-D2KF52M-BT11 to the mounting holes in the M8.

2. Secure by tightening the bolts of the RF Tag.

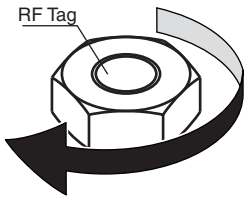

CHECK! When mounting the RF Tags, tighten the bolts to the following torques.
V680-D2KF52M-BT01: 24.5 N·m
V680-D2KF52M-BT11: 11 N·m

V680-D8KF67/-D8KF67M

■ RF Tag Installation

Secure the RF Tag with M3 screws. Tighten the screws to a torque of 0.6 N·m.

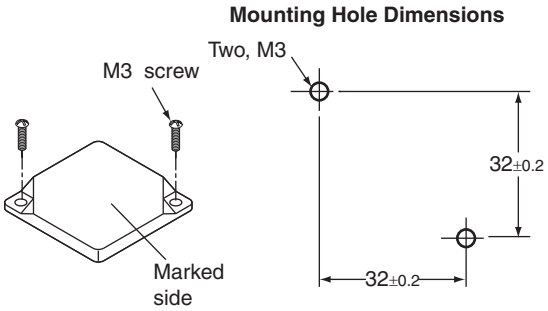

CHECK! Refer to *Effect of Surrounding Metals (Reference)* in *Section 7 Appendices* for information on the effect of metal behind the V680-D8KF67M.
p.192

CHECK! Refer to *Effect of Metal on Back of RF Tags (Reference)* in *Section 7 Appendices* for information on the effect of metal behind the V680-D8KF67.
p.190

V680-D8KF68/-D32KF68

■ RF Tag Installation

Secure the RF Tag with M4 screws. Tighten the screws to a torque of 0.7 to 1.2 N·m.

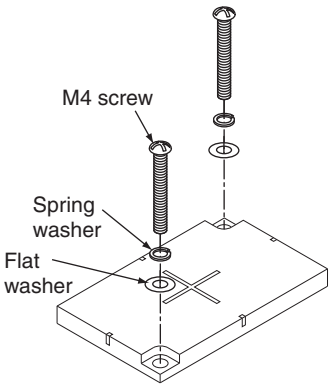

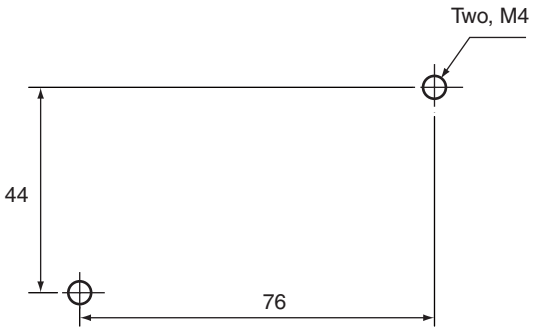

CHECK! Refer to *Effect of Surrounding Metals (Reference)* in *Section 7 Appendices* for information on the effect of metal behind the V680-D8KF68/-D32KF68.
p.194

V680S-D2KF67/-D2KF67M

■ RF Tag Installation

Secure the RF Tag with M3 screws. Tighten the screws to a torque of 0.6 N·m.

Mounting Hole Dimensions

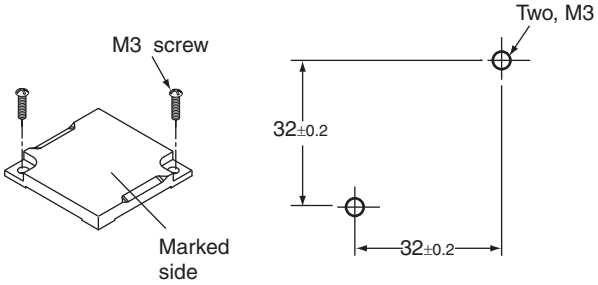

CHECK! Refer to *Effect of Surrounding Metals (Reference)* in *Section 7 Appendices* for information on the effect of metal behind the V680S-D2KF67M.
p.199

CHECK! Refer to *Effect of Metal on Back of RF Tags (Reference)* in *Section 7 Appendices* for information on the effect of metal behind the V680S-D2KF67.
p.197

V680S-D2KF68/-D2KF68M

■ RF Tag Installation

Secure the RF Tag with M4 screws. Tighten the screws to a torque of 0.7 to 1.2 N·m.

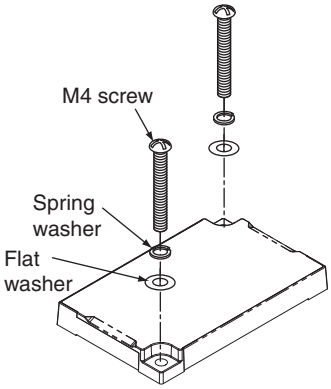

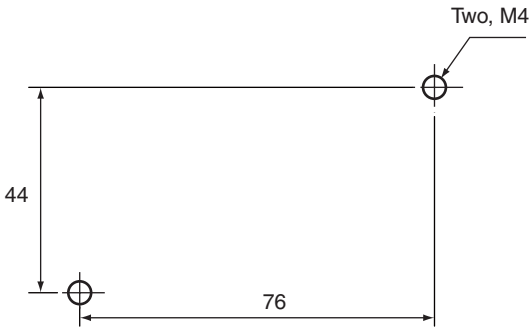

CHECK! Refer to *Effect of Surrounding Metals (Reference)* in *Section 7 Appendices* for information on the effect of metal behind the V680S-D2KF68M.
p.204

CHECK! Refer to *Effect of Metal on Back of RF Tags (Reference)* in *Section 7 Appendices* for information on the effect of metal behind the V680S-D2KF68.
p.201

V680S-D8KF67/-D8KF67M

■ RF Tag Installation

Secure the RF Tag with M3 screws. Tighten the screws to a torque of 0.6 N·m.

Mounting Hole Dimensions

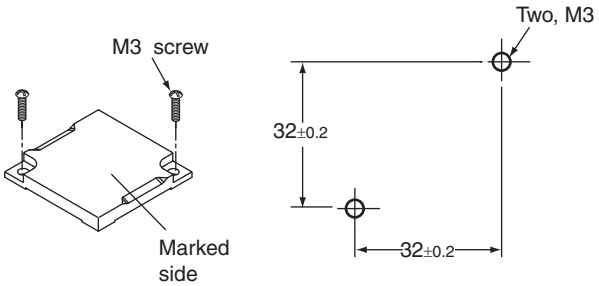

CHECK! Refer to *Effect of Surrounding Metals (Reference)* in *Section 7 Appendices* for information on the effect of metal behind the V680S-D8KF67M.
p.204

CHECK! Refer to *Effect of Metal on Back of RF Tags (Reference)* in *Section 7 Appendices* for information on the effect of metal behind the V680S-D8KF67.
p.207

V680S-D8KF68/-D8KF68M

■ RF Tag Installation

Secure the RF Tag with M4 screws. Tighten the screws to a torque of 0.7 to 1.2 N·m.

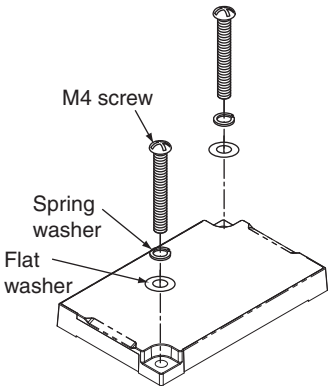

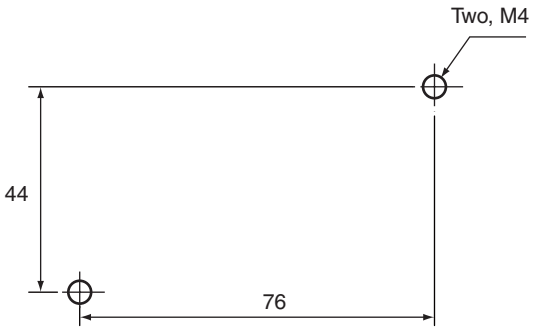

CHECK! Refer to *Effect of Surrounding Metals (Reference)* in *Section 7 Appendices* for information on the effect of metal behind the V680S-D8KF68M.
p.214

CHECK! Refer to *Effect of Metal on Back of RF Tags (Reference)* in *Section 7 Appendices* for information on the effect of metal behind the V680S-D8KF68.
p.211

Section 5
I/O Settings and Control Methods

I/O Specifications	58
Timing Charts	73
Sample Program for Host	79

I/O Specifications

I/O Allocation Table

■ Mode: 4-byte Access (4CH)

The ID Slave is allocated 64 inputs (4 words) and 64 outputs (4 words) in the PLC.
The words (word X and word Y) that are allocated depend on the node address set for the Master and the ID Slave.

▪ Word Allocations When Selecting Fixed Allocation Area 1 with a CJ1W/CS1W-DRM21

ID Slave Node Address	00	01	02	· · ·	n	n+1
Master Unit Output Area	3200 to 3203	3201 to 3204	3202 to 3205	· · ·	3200 + n to 3203 +n	3200 + (n+1) to 3203 +(n+1)
Master Unit Intput Area	3300 to 3303	3301 to 3204	3302 to 3305	· · ·	3300 + n to 3303 +n	3300 + (n+1) to 3303 +(n+1)

CHECK!

For details, refer to *section 4: Remote I/O Master Functions* in the *DeviceNet Unit Operation Manual* (Cat. No. W380).

▪ I/O Allocations

Master Unit to ID Slave

Master Unit Output Area	Bit 15	Bit 14	Bit 13	Bit 12	Bit 11	Bit 10	Bit 9	Bit 8
	Bit 7	Bit 6	Bit 5	Bit 4	Bit 3	Bit 2	Bit 1	Bit 0
XCH	$\overline{\text{INHBIT}}$/TRG	AUTO/SYNC	OUTPUTTIME	W PROTECT	VERIFY	HIGHSPD	ASCII/HEX	RESERVED
	CMD3	CMD2	CMD1	CMD0	LEN3	LEN2	LEN1	LEN0
(X+1)CH	ADDR15	ADDR14	ADDR13	ADDR12	ADDR11	ADDR10	ADDR9	ADDR8
	ADDR7	ADDR6	ADDR5	ADDR4	ADDR3	ADDR2	ADDR1	ADDR0
(X+2)CH	W-DATA15	W-DATA14	W-DATA13	W-DATA12	W-DATA11	W-DATA10	W-DATA9	W-DATA8
	W-DATA7	W-DATA6	W-DATA5	W-DATA4	W-DATA3	W-DATA2	W-DATA1	W-DATA0
(X+3)CH	W-DATA15	W-DATA14	W-DATA13	W-DATA12	W-DATA11	W-DATA10	W-DATA9	W-DATA8
	W-DATA7	W-DATA6	W-DATA5	W-DATA4	W-DATA3	W-DATA2	W-DATA1	W-DATA0

*Reserved bits are for future expansion. Do not use the Reserved bits.

ID Slave to Master Unit

Master Unit Output Area	Bit 15	Bit 14	Bit 13	Bit 12	Bit 11	Bit 10	Bit 9	Bit 8
	Bit 7	Bit 6	Bit 5	Bit 4	Bit 3	Bit 2	Bit 1	Bit 0
YCH	RESERVED						BUSY	RUN
	RESERVED						ERROR	NORM
(Y+1)CH	SYS_ERR	RESERVED	CMD_ERR	RESERVED				
	RESERVED	7F_ERR	7E79_ERR	71_ERR	7D_ERR	7A_ERR	70_ERR	72_ERR
(Y+2)CH	R-DATA15	R-DATA14	R-DATA13	R-DATA12	R-DATA11	R-DATA10	R-DATA9	R-DATA8
	R-DATA7	R-DATA6	R-DATA5	R-DATA4	R-DATA3	R-DATA2	R-DATA1	R-DATA0
(Y+3)CH	R-DATA15	R-DATA14	R-DATA13	R-DATA12	R-DATA11	R-DATA10	R-DATA9	R-DATA8
	R-DATA7	R-DATA6	R-DATA5	R-DATA4	R-DATA3	R-DATA2	R-DATA1	R-DATA0

*Reserved bits are for future expansion. Do not use the Reserved bits.

■ Mode: 26-byte (16-CH)/58-byte (32CH) Access

In 26-byte Access Mode, the ID Slave is allocated 256 inputs (16 words) and 256 outputs (16 words) in the PLC, and in 58-byte Access Mode, it is allocated 512 inputs (32 words) and 512 outputs (32 words) in the PLC. The inputs and outputs that are allocated (X words, Y words) depend on the node address set for the Master and the ID Slave.

▪ Word Allocations When Selecting Fixed Allocation Area 1 with a CJ1W/CS1W-DRM21

Mode: 26-byte (16CH) Access

ID Slave Node Address	00	01	02	· · ·	n	n+1
Master Unit Output Area	3200 to 3215	3201 to 3216	3202 to 3217	· · ·	3200 + n to 3215 +n	3200 + (n+1) to 3215 +(n+1)
Master Unit Intput Area	3300 to 3315	3301 to 3216	3302 to 3317	· · ·	3300 + n to 3315 +n	3300 + (n+1) to 3315 +(n+1)

Mode: 58-byte (32CH) Access

ID Slave Node Address	00	01	02	· · ·	n	n+1
Master Unit Output Area	3200 to 3231	3201 to 3232	3202 to 3233	· · ·	3200 + n to 3231 +n	3200 + (n+1) to 3231 +(n+1)
Master Unit Intput Area	3300 to 3331	3301 to 3232	3302 to 3333	· · ·	3300 + n to 3331 +n	3300 + (n+1) to 3331 +(n+1)

CHECK!

For details, refer to *section 4: Remote I/O Master Functions* in the *DeviceNet Unit Operation Manual* (Cat. No. W380).

▪ I/O Allocations

Master Unit to ID Slave

Master Unit Output Area	Bit 15	Bit 14	Bit 13	Bit 12	Bit 11	Bit 10	Bit 9	Bit 8
	Bit 7	Bit 6	Bit 5	Bit 4	Bit 3	Bit 2	Bit 1	Bit 0
XCH	$\overline{\text{INHBIT}}$/TRG	AUTO/SYNC	OUTPUTTIME	W PROTECT	VERIFY	HIGHSPD	ASCII/HEX	RESERVED
	CMD3	CMD2	CMD1	CMD0	RESERVED			
(X+1)CH	ADDR15	ADDR14	ADDR13	ADDR12	ADDR11	ADDR10	ADDR9	ADDR8
	ADDR7	ADDR6	ADDR5	ADDR4	ADDR3	ADDR2	ADDR1	ADDR0
(X+2)CH	LEN7	LEN6	LEN5	LEN4	LEN3	LEN2	LEN1	LEN0
	RESERVED							
(X+3)CH	W-DATA15	W-DATA14	W-DATA13	W-DATA12	W-DATA11	W-DATA10	W-DATA9	W-DATA8
	W-DATA7	W-DATA6	W-DATA5	W-DATA4	W-DATA3	W-DATA2	W-DATA1	W-DATA0
⋮	⋮	⋮	⋮	⋮	⋮	⋮	⋮	⋮
(X+1F)CH or (X+3F)CH	W-DATA15	W-DATA14	W-DATA13	W-DATA12	W-DATA11	W-DATA10	W-DATA9	W-DATA8
	W-DATA7	W-DATA6	W-DATA5	W-DATA4	W-DATA3	W-DATA2	W-DATA1	W-DATA0

*Reserved bits are for future expansion. Do not use the Reserved bits.

ID Slave to Master Unit

Master Unit Input Area	Bit 15	Bit 14	Bit 13	Bit 12	Bit 11	Bit 10	Bit 9	Bit 8
	Bit 7	Bit 6	Bit 5	Bit 4	Bit 3	Bit 2	Bit 1	Bit 0
YCH	RESERVED						BUSY	RUN
	RESERVED						ERROR	NORM
(Y+1)CH	SYS_ERR	RESERVED	CMD_ERR	RESERVED				
	RESERVED	7F_ERR	7E79_ERR	71_ERR	7D_ERR	7A_ERR	70_ERR	72_ERR
(Y+2)CH	RESERVED							
	RESERVED							
(Y+3)CH	R-DATA15	R-DATA14	R-DATA13	R-DATA12	R-DATA11	R-DATA10	R-DATA9	R-DATA8
	R-DATA7	R-DATA6	R-DATA5	R-DATA4	R-DATA3	R-DATA2	R-DATA1	R-DATA0
⋮	⋮	⋮	⋮	⋮	⋮	⋮	⋮	⋮
(Y+1F)CH or (Y+3F)CH	R-DATA15	R-DATA14	R-DATA13	R-DATA12	R-DATA11	R-DATA10	R-DATA9	R-DATA8
	R-DATA7	R-DATA6	R-DATA5	R-DATA4	R-DATA3	R-DATA2	R-DATA1	R-DATA0

*Reserved bits are for future expansion. Do not use the Reserved bits.

▪ Signal Names and Functions

Master Unit to ID Slave

Category	Symbol	Meaning
Interface signal	$\overline{\text{INHIBT}}$/TRG	Auto Mode: Functions as $\overline{\text{INHIBT}}$. 0: No communications with RF Tag. 1: Communications with RF Tag. Trigger Mode (Sync): Functions as TRG. 1: Communications with RF Tag.
Execution command	CMD3 to CMD0	0000: DATA READ 0001: DATA WRITE 0010: BIT SET 0011: BIT CLEAR 0100: DATA FILE 1111: NOISE MEASUREMENT
Process bits	LEN3 to LEN0 4-byte Access Mode	Specifies the number of process bits.
	LEN7 to LEN0 26-byte/58-byte Access Mode	
Process address	ADDR15 to ADDR0	Specifies the process start address.
Write/manipulate data	W-DATA	Stores the write data when writing is executed.
Option specifications	HIGHSPD	Communications Speed 0: Standard communications 1: High-speed communications
	VERIFY	Write Verification 0: Enabled 1: Disabled
	W PROTECT	Write Protection 0: Enabled 1: Disabled
	OUTPUT TIME	Output time 0: 100 ms 1: 500 ms
	AUTO/SYNC	Host communications mode selection setting 0: Sync Mode 1: Auto Mode
	ASCII/HEX	Read/Write data code 0: no ASCII/HEX conversion 1: ASCII/HEX conversion

ID Slave to Master Unit

Category	Symbol	Meaning
Interface signal	RUN	Normal operation: 1
	BUSY	Normal communications: 1
	NORMAL	Communications ended normally, for the set output time: 1
	ERROR	Communications ended in an error: 1
	CMD_ERR	Error in execution command specifications: 1
	SYS_ERR	ID Slave's System error: 1
Error details	70_ERR	Communications error
	71_ERR	Verification error
	72_ERR	RF Tag missing error
	7A_ERR	Address error
	7D_ERR	Write protection error
	79,7E_ERR	System error1, 2
	7F_ERR	System error3
RF Tag read data	R-DATA	Stores the read data when reading is executed.

■ V600-compatible Mode

The ID Slave is allocated 32 inputs (2 words) and 32 outputs (2 words) in the PLC. The inputs and outputs that are allocated (X words, Y words) depend on the node address set for the Master and the ID Slave.

▪ Word Allocations When Selecting Fixed Allocation Area 1 with a CJ1W/CS1W-DRM21

ID Slave Node Address	00	01	02	· · ·	n	n+1
Master Unit Output Area	3200 to 3201	3201 to 3202	3202 to 3203	· · ·	3200 + n to 3201 +n	3200 + (n+1) to 3201 +(n+1)
Master Unit Intput Area	3300 to 3301	3301 to 3202	3302 to 3303	· · ·	3300 + n to 3301 +n	3300 + (n+1) to 3301 +(n+1)

CHECK!

For details, refer to *section 4: Remote I/O Master Functions* in the *DeviceNet Unit Operation Manual* (Cat. No. W380).

▪ I/O Allocations

Master Unit to ID Slave

Master Unit Output Area	Bit 15	Bit 14	Bit 13	Bit 12	Bit 11	Bit 10	Bit 9	Bit 8
	Bit 7	Bit 6	Bit 5	Bit 4	Bit 3	Bit 2	Bit 1	Bit 0
XCH	ID15	ID14	ID13	ID12	ID11	ID10	ID9	ID8
	ID7	ID6	ID5	ID4	ID3	ID2	ID1	ID0
(X+1)CH	$\overline{\text{INHBIT}}$/TRG	WRITE/READ	RESERVED		WT_AREA	WT_BYTE	WT_MODE1	WT_MODE0
	ADDR7	ADDR6	ADDR5	ADDR4	ADDR3	ADDR2	ADDR1	ADDR0

*Reserved bits are for future expansion. Do not use the Reserved bits.

ID Slave to Master Unit

Normal Completion

Master Unit Input Area	Bit 15	Bit 14	Bit 13	Bit 12	Bit 11	Bit 10	Bit 9	Bit 8
	Bit 7	Bit 6	Bit 5	Bit 4	Bit 3	Bit 2	Bit 1	Bit 0
YCH	OD15	OD14	OD13	OD12	OD11	OD10	OD9	OD8
	OD7	OD6	OD5	OD4	OD3	OD2	OD1	OD0
(Y+1)CH	HS	NOMAL	ERROR	RESERVED				
	EXTOD23	EXTOD22	EXTOD21	EXTOD20	EXTOD19	EXTOD18	EXTOD17	EXTOD16

*Reserved bits are for future expansion. Do not use the Reserved bits.

Completion with Error

Master Unit Input Area	Bit 15	Bit 14	Bit 13	Bit 12	Bit 11	Bit 10	Bit 9	Bit 8
	Bit 7	Bit 6	Bit 5	Bit 4	Bit 3	Bit 2	Bit 1	Bit 0
YCH	RESERVED							
	HARD_ERR	RESERVED	7E,79_ERR	7D_ERR	7A_ERR	72_ERR	71_ERR	70_ERR
(Y+1)CH	HS	NOMAL	ERROR	RESERVED				
	RESERVED							

*Reserved bits are for future expansion. Do not use the Reserved bits.

▪ Signal Names and Functions

Master Unit to ID Slave

Category	Symbol	Meaning
Interface signal	$\overline{\text{INHIBT}}$/TRG	Auto Mode: Functions as INHIBT. 0: No communications with RF Tag. 1: Communications with RF Tag. Trigger Mode (Sync): Functions as TRIG. 1: Communications with RF Tag.
Execution command	WRITE/READ	0: Read command 1: Write command
	WT_MODE0	0: Byte write command 1: Bit write command
	WT_MODE1	(Enabled only when WT_MODE0 is 1.) 0: Bit set command 1: Bit clear command
	WT_BYTE	0: 2-byte write 1: 1-byte write
	WT_AREA	(Enabled only when WT_BYTE is 1.) 0: Write from the address specified in ADDR. 1: Write from the address specified in ADDR + 1 address.
Process address	ADDR7to ADDR0	Specifies the process start address.
Write/manipulate data	ID15 to 0	Stores the write data when writing is executed.

ID Slave to Master Unit

Category	Symbol	Meaning
Interface signal	HS	Handshake Handshakes with the TRG signal. Process start flag.
	NORMAL	Communications ended normally, for the set output time: 1
	ERROR	Communications ended in an error: 1
Error details	70_ERR	Communications error
	71_ERR	Verification error
	72_ERR	RF Tag missing error
	7A_ERR	Address error
	7D_ERR	Write protection error
	79,7E_ERR	System error1, 2
	HARD_ERR	ID Slave's Hardware error
RF Tag read data	OD15 to 0 EXTOD23 to EXTOD16	Stores the read data when reading is executed.

Detailed Command Settings

■ Using 4-byte, 26-byte, and 58-byte Access Modes

▪ DATA READ

Master Unit to ID Slave

Signal	Bit length	Value	Description
CMD3 to 0	4	0000B	DATA READ
LEN* to LEN0	4	1 hex to 4 hex	Number of bytes to process (4-byte access mode, no ASCII/hex conversion)
		1 hex to 8 hex	Number of bytes to process (4-byte access mode, ASCII/hex conversion)
	8	01 hex to 1A hex	Number of bytes to process (26-byte access mode, no ASCII/hex conversion)
		01 hex to 34 hex	Number of bytes to process (26-byte access mode, ASCII/hex conversion)
		01 hex to 3A hex	Number of bytes to process (58byte access mode, no ASCII/hex conversion)
		01 hex to 74 hex	Number of bytes to process (58byte access mode, ASCII/hex conversion)
ADDR15 to 0	16	0000 hex to FFFF hex	Read start address

ID Slave to Master Unit

Signal	Bit length	Value	Description
NORMAL	1	0 or 1	Set to 1 when operation is ended normally.
ERROR	1	0 or 1	The corresponding bit is set to 1 if the command ends in an error.
XXX_ERR	9	0 or 1	The bit corresponding to error completion will be 1, and the error details will be displayed.
R-DATA	32	---	Read data (4-byte Access Mode)
	208	---	Read data (26-byte Access Mode)
	464	---	Read data (58byte Access Mode)

Master Unit to ID Slave Settings Example

Example: Reading 2 Bytes of Data from Address 0120 hex.(4-byte Access Mode)

	Bits															
	15	14	13	12	11	10	9	8	7	6	5	4	3	2	1	0
X ch	*	*	*	*	*	*	*	0	0	0	0	0	0	0	1	0
	Change according to settings.							Fixed	DATA READ				2 bytes			
(X+1) ch	0	0	0	0	0	0	0	1	0	0	1	0	0	0	0	0
	Address 120															
(X+2) ch	0	0	0	0	0	0	0	0	0	0	0	0	0	0	0	0
	Fixed															
(X+3) ch	0	0	0	0	0	0	0	0	0	0	0	0	0	0	0	0
	Fixed															

Read start address

	bit15-12	bit11-8
	bit7-4	bit3-0
(X+1)ch	0	1
	2	0

Data of RF tag

Address	bit7-4	bit3-0
0000 hex		
⋮	⋮	⋮
0120 hex	3	4
0121 hex	1	2
0122 hex	7	8
0123 hex	5	6
⋮	⋮	⋮

The 2 bytes of data is read from the address of the RF tag set to the read start address.

Read data

	bit15-12	bit11-8
	bit7-4	bit3-0
(Y+2)ch	1	2
	3	4
(Y+3)ch	0	0
	0	0

▪ DATA WRITE

Master Unit to ID Slave

Signal	Bit length	Value	Description
CMD3 to CMD0	4	0001B	DATA WRITE
LEN* to LEN0	4	1 hex to 4 hex	Number of bytes to process (4-byte access mode, no ASCII/hex conversion)
		1 hex to 8 hex	Number of bytes to process (4-byte access mode, ASCII/hex conversion)
	8	01 hex to 1A hex	Number of bytes to process (26-byte access mode, no ASCII/hex conversion)
		01 hex to 34 hex	Number of bytes to process (26-byte access mode, ASCII/hex conversion)
		01 hex to 3A hex	Number of bytes to process (58byte access mode, no ASCII/hex conversion)
		01 hex to 74 hex	Number of bytes to process (58byte access mode, ASCII/hex conversion)
ADDR15 to ADDR0	16	0000 hex to FFFF hex	Write start address
W-DATA	32	---	Write data (4-byte Access Mode)
	208	---	Write data (26-byte Access Mode)
	464	---	Write data (58-byte Access Mode)

ID Slave to Master Unit

Signal	Bit length	Value	Description
NORMAL	1	0 or 1	Set to 1 when operation is ended normally.
ERROR	1	0 or 1	The corresponding bit is set to 1 if the command ends in an error.
XXX_ERR	9	0 or 1	The bit corresponding to error completion will be 1, and the error details will be displayed.

Master Unit to ID Slave Settings Example

Example: Writing Three Bytes “1278AB hex” Starting from Address 0321 hex.(4-byte Access Mode)

	Bits															
	15	14	13	12	11	10	9	8	7	6	5	4	3	2	1	0
X ch	*	*	*	*	*	*	*	0	0	0	0	1	0	0	1	1
	Change according to settings.							Fixed	DATA WRITE				3 bytes			
(X+1) ch	0	0	0	0	0	0	1	1	0	0	1	0	0	0	0	1
	Address 0321 hex															
(X+2) ch	0	1	1	1	1	0	0	0	0	0	0	1	0	0	1	0
	78 hex								12 hex							
(X+3) ch	0	0	0	0	0	0	0	0	1	0	1	0	1	0	1	1
	Fixed								AB hex							

Write start address

	bit15-12	bit11-8
	bit7-4	bit3-0
(X+1)ch	0	3
	2	1

Write data

	bit15-12	bit11-8
	bit7-4	bit3-0
(X+2)ch	7	8
	1	2
(X+3)ch	0	0
	A	B

The 3 bytes of data is written from the address of the RF tag set to the write start address.

Data of RF tag

Address	bit7-4	bit3-0
0000 hex		
⋮	⋮	⋮
0321 hex	1	2
0322 hex	7	8
0323 hex	A	B
⋮	⋮	⋮

▪ BIT SET

Master Unit to ID Slave

Signal	Bit length	Value	Description
CMD3 to CMD0	4	0010B	BIT SET
LEN7 to LEN0	8	1 to 4	Number of BIT SET data bytes An error will occur if 0, or 5 or higher is specified.
ADDR15 to ADDR0	16	0000 hex to FFFF hex	BIT SET start address
W-DATA	32	---	BIT SET data Valid to the number of BIT SET data bytes.

ID Slave to Master Unit

Signal	Bit length	Value	Description
NORMAL	1	0 or 1	Set to 1 when operation is ended normally.
ERROR	1	0 or 1	Set to 1 if the command ends in an error.
XXX_ERR	9	0 or 1	The bit corresponding to error completion will be 1, and the error details will be displayed.
R-DATA	32	---	Write data

Master Unit to ID Slave Settings Example

Setting Example for Master Unit to DeviceNet ID Slave

The following is an example of executing BIT SET for 2 bytes of data from address 0321 hex in 4-byte access mode. "0120 hex" is specified to execute BIT SET to turn ON bit 0 in the first byte of data and bit 5 in the second byte of data.

The data areas marked with a square in the figure above will be set.

	Bits															
	15	14	13	12	11	10	9	8	7	6	5	4	3	2	1	0
X ch	*	*	*	*	*	*	*	0	0	0	1	0	0	0	1	0
	Change according to settings.							Fixed	BIT SET				2 bytes			
(X+1) ch	0	0	0	0	0	0	1	1	0	0	1	0	0	0	0	1
	Address 0321 hex															
(X+2) ch	0	0	1	0	0	0	0	0	0	0	0	0	0	0	0	1
	The bit to be set is set to 1.								The bit to be set is set to 1.							
(X+3) ch	0	0	0	0	0	0	0	0	0	0	0	0	0	0	0	0
	Fixed								Fixed							

▪ BIT CLEAR

Master Unit to ID Slave

Signal	Bit length	Value	Description
CMD3 to CMD0	4	0011B	BIT Clear
LEN7 to LEN0	8	1 to 4	Number of BIT CLEAR data bytes A specification error will occur if 0 hex, or 5 hex or higher is specified.
ADDR15 to ADDR0	16	0000 hex to FFFF hex	BIT CLEAR start address
W-DATA	32	---	BIT clear data Valid to the number of BIT CLEAR data bytes.

ID Slave to Master Unit

Signal	Bit length	Value	Description
NORMAL	1	0 or 1	Set to 1 when operation is ended normally.
ERROR	1	0 or 1	Set to 1 if the command ends in an error.
XXX_ERR	9	0 or 1	The bit corresponding to error completion will be 1, and the error details will be displayed.
R-DATA	32	---	Write data

Master Unit to ID Slave Settings Example

Setting Example for Master Unit to DeviceNet ID Slave

The following is an example of executing BIT CLEAR for 3 bytes of data from address 0321 hex in 4-byte access mode. " 100140 hex" is specified to execute BIT CLEAR to turn OFF bit 4 in the first byte of data, bit 0 in the second byte of data, and bit 6 in the third byte of data.

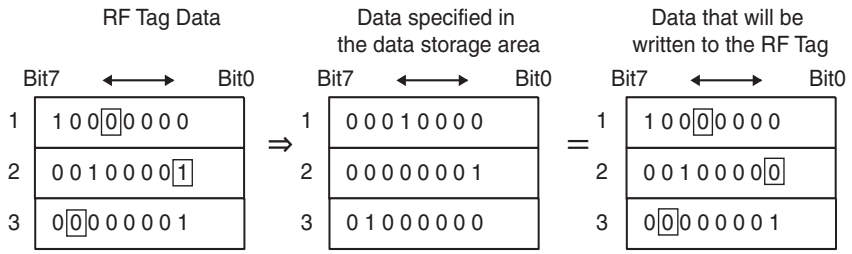

The data areas marked with a square in the figure above will be cleared.

	Bits															
	15	14	13	12	11	10	9	8	7	6	5	4	3	2	1	0
X ch	*	*	*	*	*	*	*	0	0	0	1	1	0	0	1	1
	Change according to settings.							Fixed	BIT CLEAR				3 bytes			
(X+1) ch	0	0	0	0	0	0	1	1	0	0	1	0	0	0	0	1
	Address 0321 hex															
(X+2) ch	0	0	0	0	0	0	0	1	0	0	0	1	0	0	0	0
	The bit to be cleared is set to 1.								The bit to be cleared is set to 1.							
(X+3) ch	0	0	0	0	0	0	0	0	0	1	0	0	0	0	0	0
	Fixed								The bit to be cleared is set to 1.							

▪ DATA FILL

Master Unit to ID Slave

Signal	Bit length	Value	Description
CMD3 to CMD0	4	0100B	DATA FILL
LEN7 to LEN0	4	1 hex to F hex 4-byte mode	Number of blocks to process (specified number of blocks x 8 bytes) If the number of blocks is 0, all memory will be selected.
	8	00 hex to FF hex For 26-byte or 58-byte Access Mode	
ADDR15 to ADDR0	16	0000 hex to FFFF hex	DATA FILL start address
W-DATA	32	00 hex to FF hex	DATA FILL data Data between the second byte and the fourth byte is invalid.

ID Slave to Master Unit

Signal	Bit length	Value	Description
NORMAL	1	0 or 1	Set to 1 when operation is ended normally.
ERROR	1	0 or 1	Set to 1 if the command ends in an error.
XXX_ERR	9	0 or 1	The bit corresponding to error completion will be 1, and the error details will be displayed.
R-DATA	32	Disabled	RF Tag memory cannot be rewritten.

Master Unit to ID Slave Settings Example

Example: Filling with FF hex to 16 bytes from Address 0006 hex (2 Blocks × 8 Bytes/Block)

	Bits															
	15	14	13	12	11	10	9	8	7	6	5	4	3	2	1	0
X ch	*	*	*	*	*	*	*	0	0	1	0	0	0	0	1	0
	Change according to settings.							Fixed	DATA FILL				2 blocks			
(X+1) ch	0	0	0	0	0	0	0	0	0	0	0	0	0	1	1	0
	Address 0006 hex															
(X+2) ch	0	0	0	0	0	0	0	0	1	1	1	1	1	1	1	1
	Fixed								FF hex							
(X+3) ch	0	0	0	0	0	0	0	0	0	0	0	0	0	0	0	0
	Fixed								Fixed							

▪ NOISE MEASUREMENT

Master Unit to ID Slave

Signal	Bit length	Value	Description
CMD3 to CMD0	4	1111B	NOISE MEASUREMENT

ID Slave to Master Unit

Mode: 4-byte Access

Signal	Bit length	Value	Description
NORMAL	1	0 or 1	Set to 1 when operation is ended normally.
ERROR	1	0 or 1	Set to 1 if the command ends in an error.
XXX_ERR	9	0 or 1	The bit corresponding to error completion will be 1, and the error details will be displayed.
R-DATA	32	---	Result of noise measurement

Master Unit to ID Slave Settings Example

Mode:4-byte Access

	Bits															
	15	14	13	12	11	10	9	8	7	6	5	4	3	2	1	0
X ch	*	*	*	*	*	*	*	0	1	1	1	1	0	0	0	0
	Change according to settings.							Fixed	NOISE MEASUREMENT				Fixed			
(X+1) ch	0	0	0	0	0	0	0	0	0	0	0	0	0	0	0	0
	Fixed															
(X+2) ch	0	0	0	0	0	0	0	0	0	0	0	0	0	0	0	0
	Fixed															
(X+3) ch	0	0	0	0	0	0	0	0	0	0	0	0	0	0	0	0
	Fixed															

ID Slave to Master Unit Settings Example

Noarmal Completion

	Bits															
	15	14	13	12	11	10	9	8	7	6	5	4	3	2	1	0
Y ch	0	0	0	0	0	0	0	1	0	0	0	0	0	0	0	1
			Fixed				BUSY	RUN			Fixed				ERROR	NORMAL
(Y+1) ch	0	0	0	0	0	0	0	0	0	0	0	0	0	0	0	0
	No error															
(Y+2) ch	*	*	*	*	*	*	*	*	*	*	*	*	*	*	*	*
	Maximum noise level											Average noise level				
(Y+3) ch	0	0	0	0	0	0	0	0	*	*	*	*	*	*	*	*
				Always 00 hex								Minimum noise leve				

Mode: 26-byte or 58-byte Access

Signal	Bit length	Value	Description
NORMAL	1	0 or 1	Set to 1 when operation is ended normally.
ERROR	1	0 or 1	Set to 1 if the command ends in an error.
XXX_ERR	10	0 or 1	The bit corresponding to error completion will be 1, and the error details will be displayed.
R-DATA	32	---	Result of noise measurement

Master Unit to ID Slave Settings Example

Mode:26-byte Access

	Bits															
	15	14	13	12	11	10	9	8	7	6	5	4	3	2	1	0
X ch	*	*	*	*	*	*	*	0	1	1	1	1	0	0	0	0
	Change according to settings.							Fixed	NOISE MEASUREMENT				Fixed			
(X+1) ch	0	0	0	0	0	0	0	0	0	0	0	0	0	0	0	0
	Fixed															
(X+2) ch	0	0	0	0	0	0	0	0	0	0	0	0	0	0	0	0
	Fixed															
(X+3) ch	0	0	0	0	0	0	0	0	0	0	0	0	0	0	0	0
	Fixed															
⋮	⋮	⋮	⋮	⋮	⋮	⋮	⋮	⋮	⋮	⋮	⋮	⋮	⋮	⋮	⋮	⋮
(X+1F) ch	0	0	0	0	0	0	0	0	0	0	0	0	0	0	0	0
	Fixed															

ID Slave to Master Unit Settings Example

Noarmal Completion

	Bits															
	15	14	13	12	11	10	9	8	7	6	5	4	3	2	1	0
Y ch	0	0	0	0	0	0	0	1	0	0	0	0	0	0	0	1
	Fixed						BUSY	RUN	Fixed						ERROR	NORMAL
(Y+1) ch	0	0	0	0	0	0	0	0	0	0	0	0	0	0	0	0
	No error															
(Y+2) ch	0	0	0	0	0	0	0	0	0	0	0	0	0	0	0	0
	Fixed															
(Y+3) ch	*	*	*	*	*	*	*	*	*	*	*	*	*	*	*	*
	Maximum noise level								Average noise level							
(Y+4) ch	0	0	0	0	0	0	0	0	*	*	*	*	*	*	*	*
	Always 00 hex								Minimum noise level							
(Y+5) ch	0	0	0	0	0	0	0	0	0	0	0	0	0	0	0	0
	Fixed															
⋮	⋮	⋮	⋮	⋮	⋮	⋮	⋮	⋮	⋮	⋮	⋮	⋮	⋮	⋮	⋮	⋮
(Y+1F) ch	0	0	0	0	0	0	0	0	0	0	0	0	0	0	0	0
	Fixed															

■ Using V600-compatible Mode

▪ BIT SET

Master Unit to ID Slave

Signal	Bit length	Value	Description
WRITE/READ	1	1	Write operation
WT_MODE0	1	1	BIT WRITE
WT_MODE1	1	0	BIT SET
WT_BYTE	1	0 or 1	If the bit is 0, the operation will be 8-bit write, and 16-bit write if the bit is 1.
WT_AREA	1	0 or 1	Write Address Switching When Using 8-bit Write Operation If the bit is 0, the data for ID0 to 7 will be written to the RF Tag, and data for ID8 to 15 will be written to the RF Tag if the bit is 1.
ADDR7 to ADDR0	8	00 hex to FF hex	BIT SET start address
ID	16	---	BIT SET data Valid to the number of BIT SET data bytes.

ID Slave to Master Unit

Signal	Bit length	Value	Description
NORMAL	1	0 or 1	Set to 1 when operation is ended normally.
ERROR	1	0 or 1	Set to 1 if the command ends in an error.
OD	24	0000····	Filled with zeroes.

Master Unit to ID Slave Settings Example

Setting Example for Master Unit to DeviceNet ID Slave

The following is an example of executing BIT SET for 2 bytes of data from address 10 hex. " 0120 hex" is specified to execute BIT SET to turn ON bit 0 in the first byte of data and bit 5 in the second byte of data.

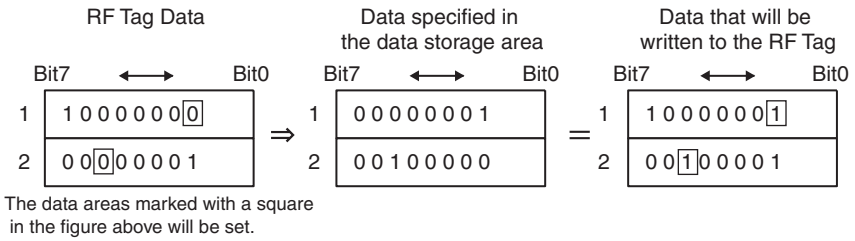

	Bits															
	15	14	13	12	11	10	9	8	7	6	5	4	3	2	1	0
X ch	0	0	1	0	0	0	0	0	0	0	0	0	0	0	0	1
	The bit to be set is set to 1.								The bit to be set is set to 1.							
(X+1) ch	0	0	0	1	0	0	0	0	*	1	0	0	0	1	0	1
	Address 10 hex								Change according to settings.	WRITE	Fixed		16 bit write		BIT SET	

▪ BIT CLEAR

Master Unit to ID Slave

Signal	Bit length	Value	Description
WRITE/READ	1	1	Write operation
WT_MODE0	1	1	BIT WRITE
WT_MODE1	1	1	BIT CLEAR
WT_BYTE	1	0 or 1	If the bit is 0, the operation will be 8-bit write, and 16-bit write if the bit is 1.
WT_AREA	1	0 or 1	Write Address Switching When Using 8-bit Write Operation If the bit is 0, the data for ID0 to 7 will be written to the RF Tag, and data for ID8 to 15 will be written to the RF Tag if the bit is 1.
ADDR7 to ADDR0	8	00 hex to FF hex	BIT CLEAR start address
ID	16	---	BIT CLEAR data Valid to the number of BIT clear data bytes.

ID Slave to Master Unit

Signal	Bit length	Value	Description
NORMAL	1	0 or 1	Set to 1 when operation is ended normally.
ERROR	1	0 or 1	Set to 1 if the command ends in an error.
OD	24	0000····	Filled with zeroes.

Master Unit to ID Slave Settings Example

The following is an example of executing BIT CLEAR for 1 byte of data from address 10 hex. " 10 hex" is specified to execute BIT CLEAR to turn OFF bit 4 in the first byte of data.

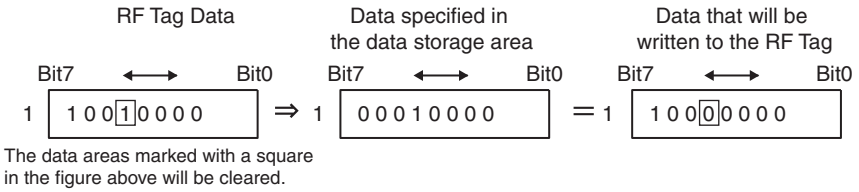

	Bits															
	15	14	13	12	11	10	9	8	7	6	5	4	3	2	1	0
X ch	0	0	0	0	0	0	0	0	0	0	0	1	0	0	0	0
	The bit to be cleared is set to 1.								The bit to be cleared is set to 1.							
(X+1) ch	0	0	0	1	0	0	0	0	*	1	0	0	1	0	1	1
	Address 10 hex								Change according to settings.	WRITE	Fixed		Write ID0 to 7		BIT CLEAR	

Timing Charts

Trigger Mode

The Trigger Mode timing chart is shown below.

■ Mode Switch Settings 0 to 2 (4-byte, 26-byte, and 58-byte Access Modes)

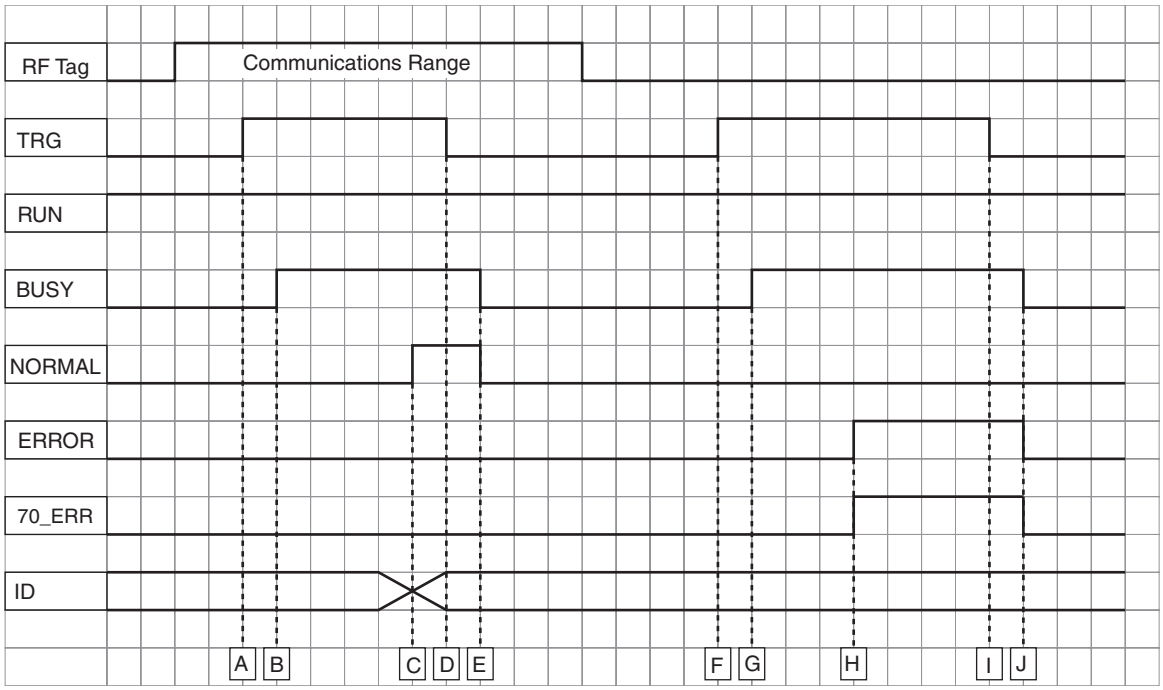

▪ RF Tag within the Antenna's Interrogation Zone

A: The PLC turns ON TRG, and sends the execution command to ID Slave.

B: The ID Slave receives TRG, determines the CMD (command), LEN (data length), and ADDR (start address), starts communications with RF Tag, and then turns ON BUSY.

C: The ID Slave turns ON NORMAL when communications with RF Tag ends normally.

D: Check from PLC that NORMAL Signal is ON, and then turn OFF TRG.

E: After confirming that TRG is OFF, the ID Slave turns OFF BUSY and NORMAL.

▪ RF Tag Not within Interrogation Zone

F: The PLC turns ON TRG and sends execution command to the ID Slave.

G: The ID Slave receives TRG, starts communications with RF Tag, and then turns ON BUSY.

H: When communications with RF Tag ends in an error, ID Slave turns ON ERR (Error end) and 70_ERR (RF Tag missing error).

I: Confirm that the ERR signal is 1 (ON), and then turn OFF TRG.

J: After confirming that TRG is OFF, the ID Slave turns OFF ERR and 70_ERR.

■ Mode Switch Settings 3 and 4 (V600-compatible Trigger Mode)

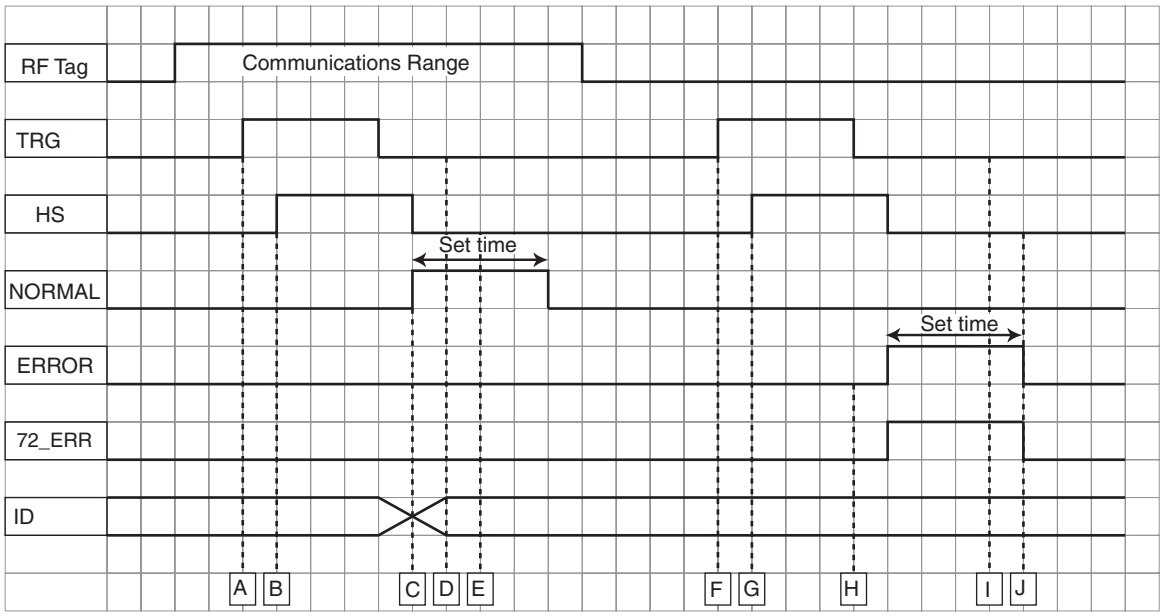

▪ RF Tag within the Antenna's Interrogation Zone

A: The PLC turns ON TRG, and sends the execution command to the ID Slave.

B: The ID Slave receives TRG, determines WT_AREA, WT_BYTE, WT_MODE1, WT_MODE0, then turns ON HS.

C: HS output will turn OFF when TRG turns OFF.

D: The ID Slave turns ON NORMAL when communications with RF Tag ends normally.

E: The PLC checks that the NORMAL signal is ON, and then the data output is read.

F: Once the time set in the output mode has elapsed, the ID Slave turns OFF the data output and NORMAL.

▪ RF Tag Not within Interrogation Zone

G: The PLC turns ON TRG and sends execution command to the ID Slave.

H: The ID Slave receives TRG, turns ON HS output, and then starts communications with the RF Tag ID and turns ON BUSY.

I: HS output will turn OFF when TRG turns OFF.

J: When communications with RF Tag ends in an error, the ID Slave turns ON ERR (Error end) and 72_ERR (RF Tag missing error).

K: The PLC confirms that the ERR signal is ON, and then the data output is read.

L: Once the time set in the output mode has elapsed, the ID Slave turns OFF ERR and 72_ERR.

Auto Mode with 100-ms Output Time

The timing chart for Auto Mode with a 100-ms output time is shown in the following figure.

■ Mode Switch Settings 0 to 2 (4-byte, 26-byte, and 58-byte Access Mode)

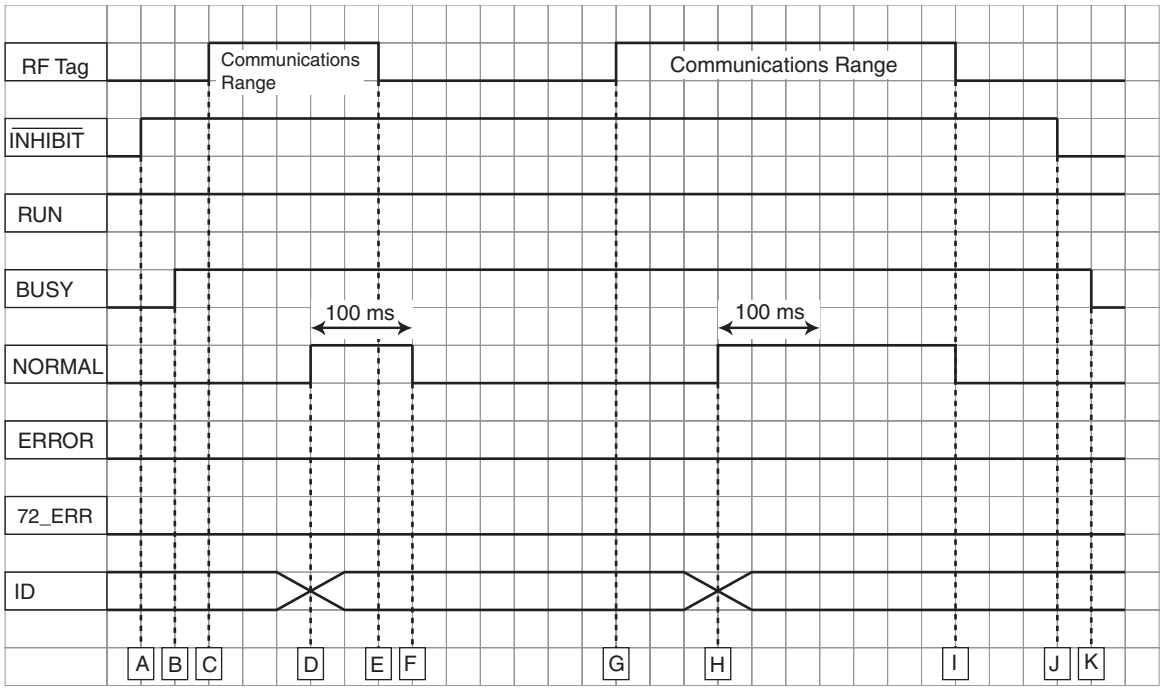

A: The PLC turns ON $\overline{\text{INHIBIT}}$ and sends the execution command to the ID Slave.

B: The ID Slave checks that $\overline{\text{INHIBIT}}$ is ON, determines the CMD (command), LEN (data length), and ADDR (start address), and then turns ON BUSY.

C: The ID Slave starts communications with an RF Tag when one enters the Antenna's interrogation zone.

D: The ID Slave turns ON NORMAL when communications with RF Tag end normally.

E: The RF Tag moves outside the Antenna's interrogation zone within 100 ms after the ID Slave result is output.

F: The result output is turned OFF 100 ms after the ID Slave result is output.

G: The ID Slave starts communications with RF Tag when it enters the Antenna's interrogation zone.

H: The ID Slave turns ON NORMAL when communications with the RF Tag ends normally.

I: Result output is turned OFF when the RF Tag moves outside the Antenna's interrogation zone 100 ms after the ID Slave result is output.

J: The PLC turns OFF $\overline{\text{INHIBIT}}$ to prevent command execution by the ID Slave.

K: The ID Slave confirms that $\overline{\text{INHIBIT}}$ is OFF, and then turns OFF BUSY.

■ Mode Switch Setting 5 (V600-compatible Auto Mode)

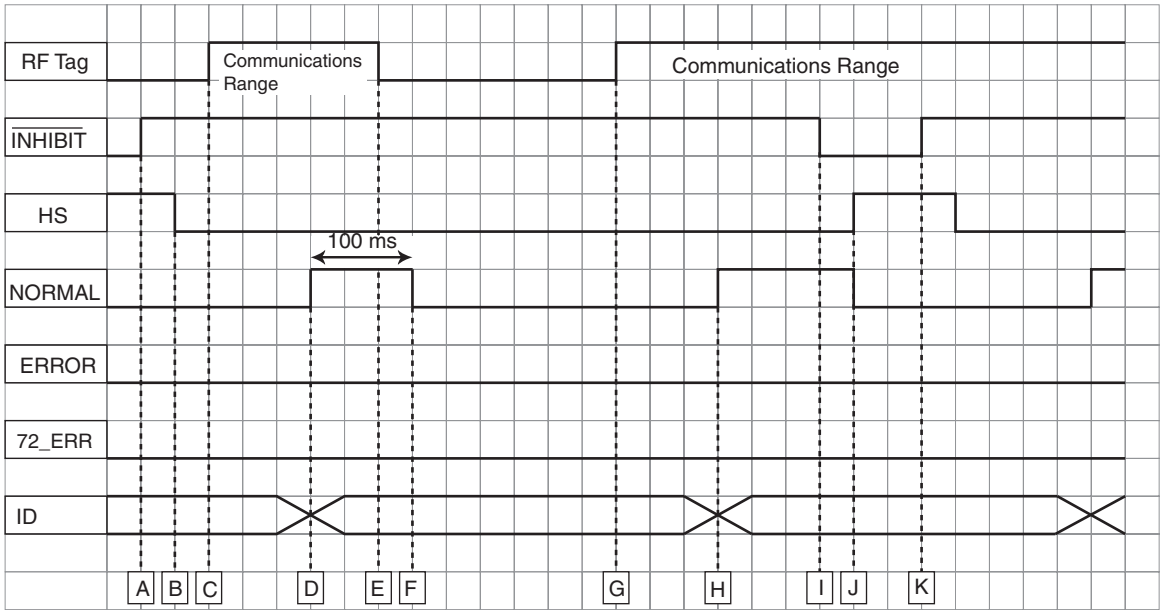

A: The PLC turns ON $\overline{\text{INHIBIT}}$ and sends the execution command to the ID Slave.

B: The ID Slave checks that $\overline{\text{INHIBIT}}$ is ON, determines WT_AREA, WT_BYTE, WT_MODE1, WT_MODE0, and then turns OFF HS.

C: The ID Slave starts communications with an RF Tag when one enters the Antenna's interrogation zone.

D: The ID Slave turns ON NORMAL when communications with RF Tag end normally.

E: The RF Tag moves outside the Antenna's interrogation zone within 100 ms after the ID Slave result is output.

F: The result output is turned OFF 100 ms after the ID Slave result is output.

G: The ID Slave starts communications with RF Tag when it enters the Antenna's interrogation zone.

H: The ID Slave turns ON NORMAL when communications with the RF Tag ends normally.

I: The PLC turns OFF $\overline{\text{INHIBIT}}$ when processing continues with the RF Tag in the Antenna's interrogation zone.

J: The ID Slave confirms that $\overline{\text{INHIBIT}}$ is OFF, and then turns ON HS output and turns OFF the result output.

K: The PLC turns ON $\overline{\text{INHIBIT}}$, detects an RF Tag again, and starts communications.

Auto Mode (500-ms Output Time)

The timing chart for Auto Mode with a 500-ms output time is shown in the following figure.

■ Mode Switch Settings 0 to 2 (4-byte, 26-byte, and 58-byte Access Mode)

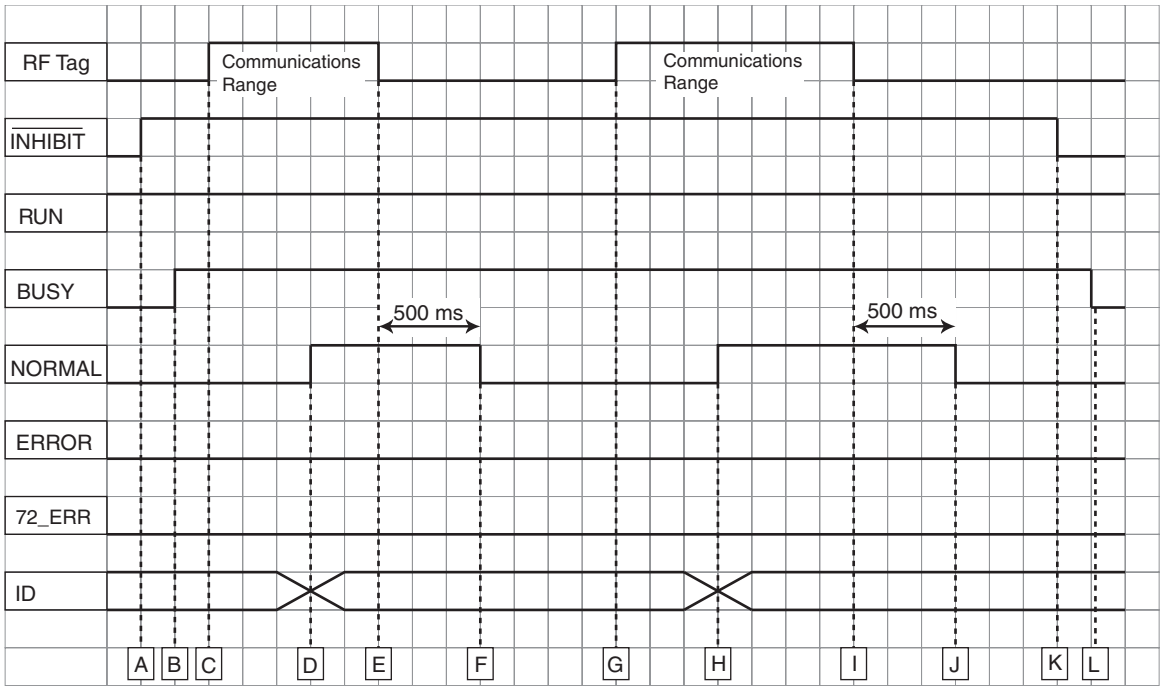

A: The PLC turns ON $\overline{\text{INHIBIT}}$, and sends the execution command to the ID Slave.

B: The ID Slave checks that $\overline{\text{INHIBIT}}$ is ON, determines the CMD (command), LEN (data length), and ADDR (start address), and then turns ON BUSY.

C: The ID Slave starts communications with an RF Tag when one enters the Antenna's interrogation zone.

D: The ID Slave turns ON NORMAL when communications with the RF Tag ends normally.

E: The RF Tag moves out of the Antenna's interrogation zone.

F: The ID Slave waits for the RF Tag to leave the Antenna's interrogation zone, and then turns OFF the result output 500 ms afterward.

G: The ID Slave starts communications with the RF Tag when one enters the Antenna's interrogation zone.

H: The ID Slave turns ON NORMAL when communications with the RF Tag ends normally.

I: The ID Slave waits for the RF Tag to move outside the Antenna's interrogation zone, and then turns ON the result output 500 ms afterward.

J: The PLC sets $\overline{\text{INHIBIT}}$ to 0 (OFF) to prevent command execution by the ID Slave.

K: The ID Slave confirms that $\overline{\text{INHIBIT}}$ is OFF, and then turns OFF BUSY.

■ Mode Switch Setting 6 (V600-compatible Auto Mode)

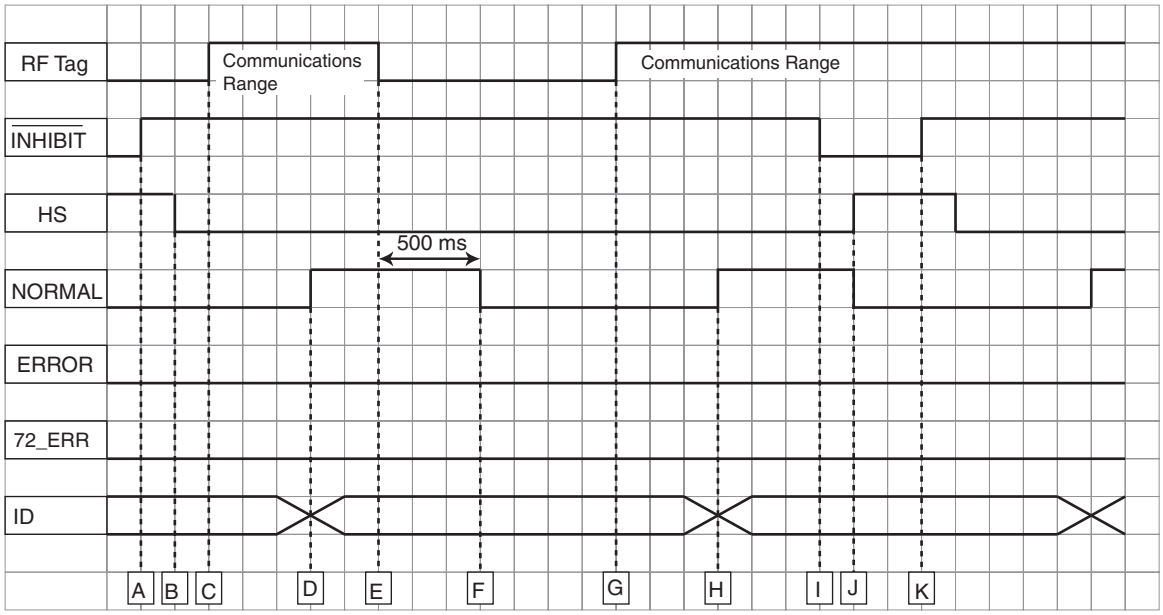

A: The PLC turns ON $\overline{\text{INHIBIT}}$, and sends the execution command to the ID Slave.

B: The ID Slave checks that $\overline{\text{INHIBIT}}$ is ON, determines WT_AREA, WT_BYTE, WT_MODE1, WT_MODE0, and then turns OFF HS.

C: The ID Slave starts communications with an RF Tag when one enters the Antenna's interrogation zone.

D: The ID Slave turns ON NORMAL when communications with the RF Tag is finished.

E: The RF Tag moves outside the Antenna's interrogation zone within 500 ms after the ID Slave result is output.

F: The result output is turned OFF 500 ms after the ID Slave result is output.

G: The ID Slave starts communications with the RF Tag when one enters the Antenna's interrogation zone.

H: The ID Slave turns ON NORMAL when communications with the RF Tag is finished.

I: The PLC turns OFF $\overline{\text{INHIBIT}}$ when processing continues with the RF Tag in the Antenna's interrogation zone.

J: The ID Slave confirms that $\overline{\text{INHIBIT}}$ is OFF, and then turns ON HS output and turns OFF the result output.

K: The PLC turns ON $\overline{\text{INHIBIT}}$, detects the RF Tag again, and starts communications.

Sample Program for Host

SampleProgram1

The following is an example of reading 4 bytes from an RF Tag in Trigger (SYNC) Mode starting with address 10 hex.

■ Using 4-byte Access Mode

Node Address Switch and Mode Switch Settings

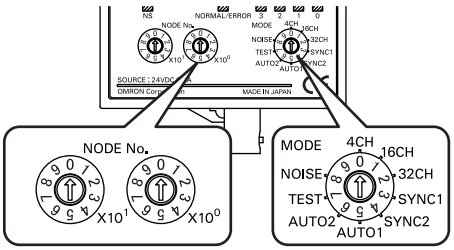

Node Address switchs: ”00”
Mode swith: “4CH“

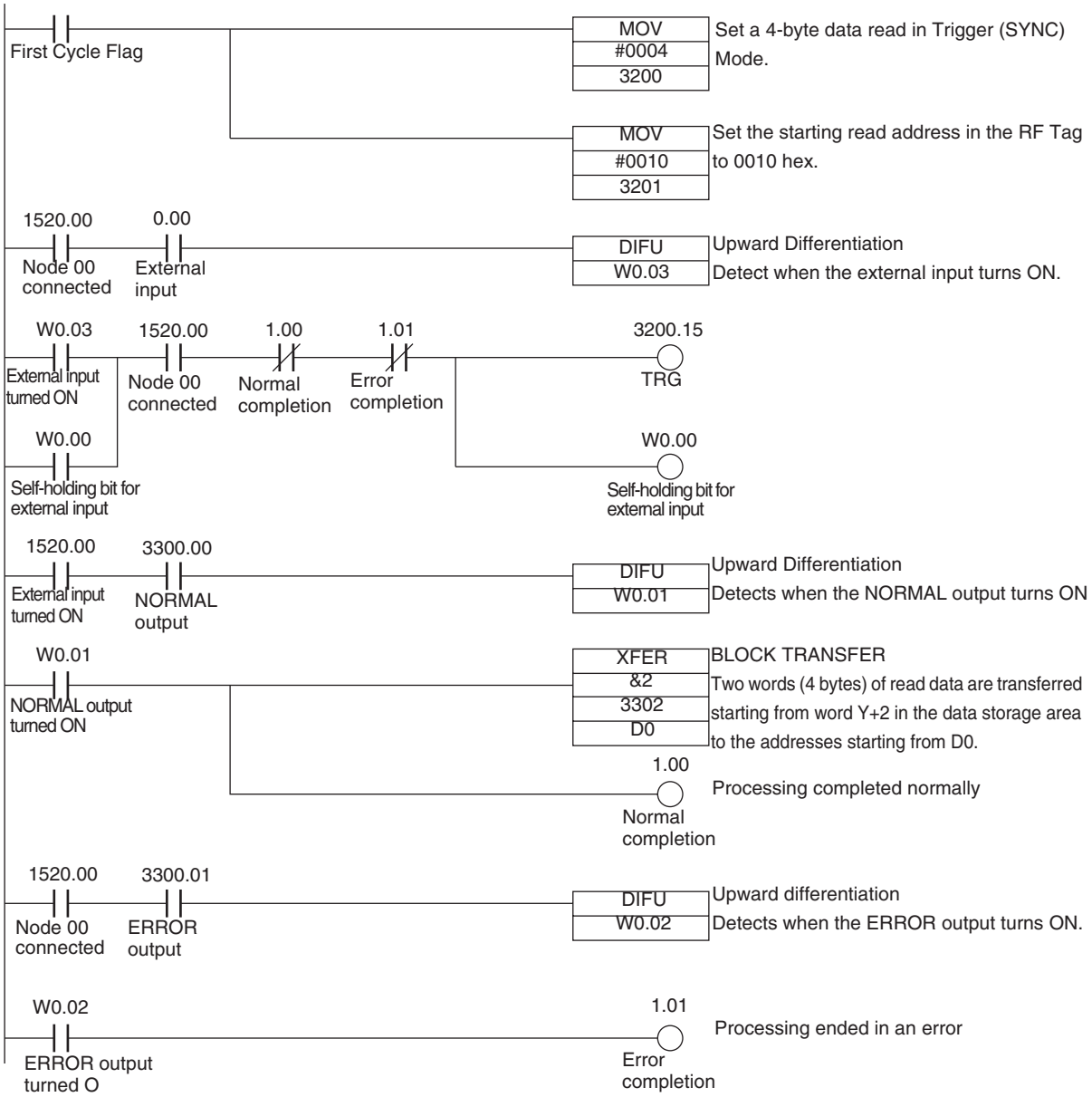

CHECK! For information on the timing chart in Trigger (SYNC) Mode, refer to *Mode Switch Settings 0 to 2 (4-byte, 26-byte, and 58-byte Access Modes)*in this section.
p.73

SampleProgram2

The following is an example of reading 3 bytes from an RF Tag in a V600-compatible mode starting with address 10 hex.

■ V600-compatible Mode

Node Address Switch and Mode Switch Settings

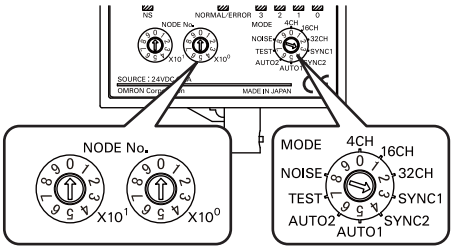

Node Address switchs: ”00”
Mode swith: “SYNC1“

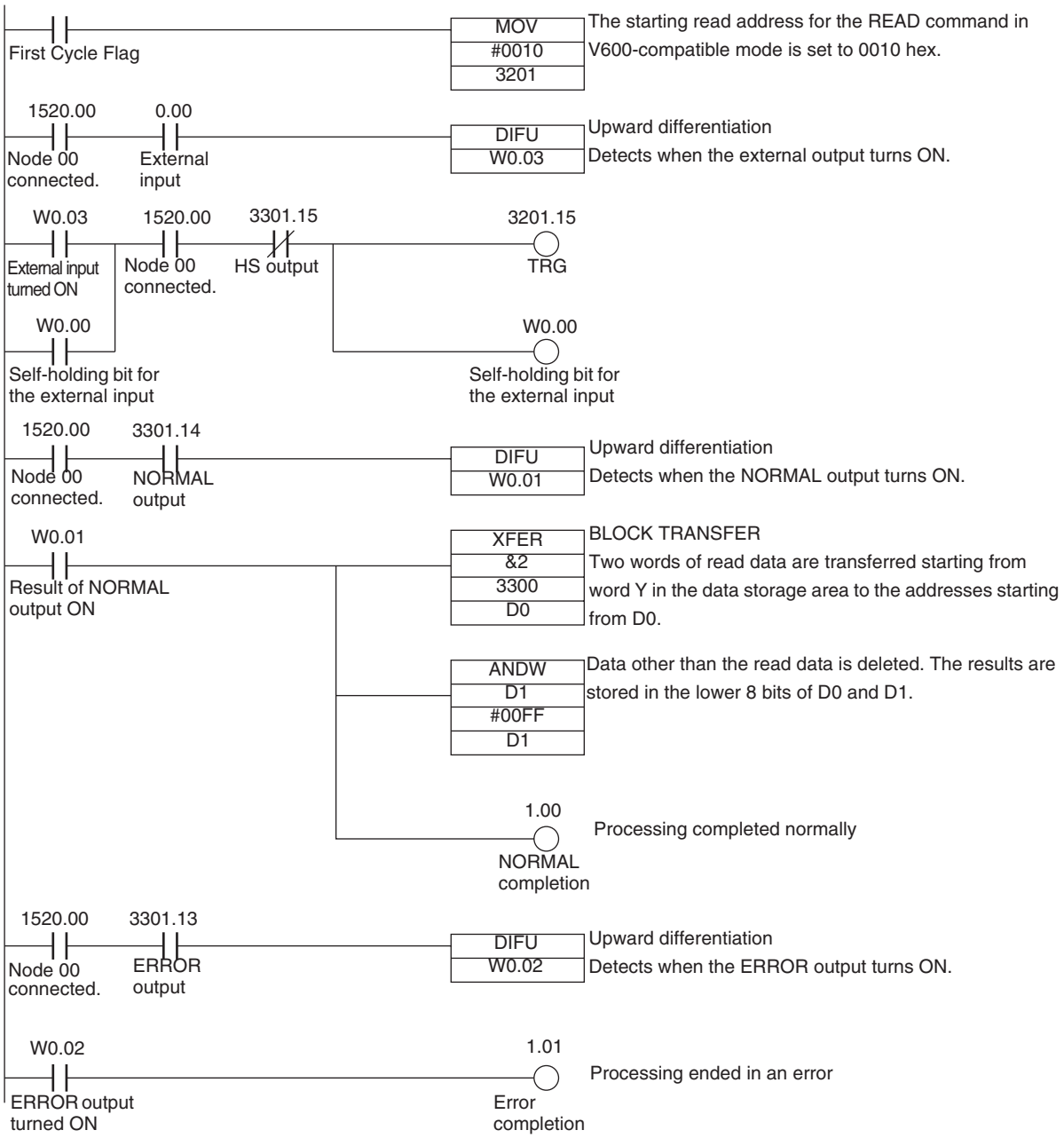

CHECK! For information on the timing chart in V600-compatible Trigger Mode, refer to *Mode Switch Settings 0 to 2 (4-byte, 26-byte, and 58-byte Access Modes)* in this section.
p.73

SampleProgram3

The following is an example of reading 16 bytes from an RF Tag in Auto Mode starting with address 02 hex.

■ Using 26-byte Access Mode.

Node Address Switch and Mode Switch Settings

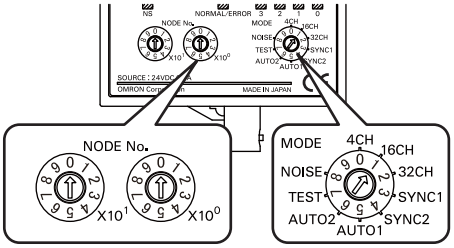

Node Address switchs: ”00”
Mode swith: “16CH“

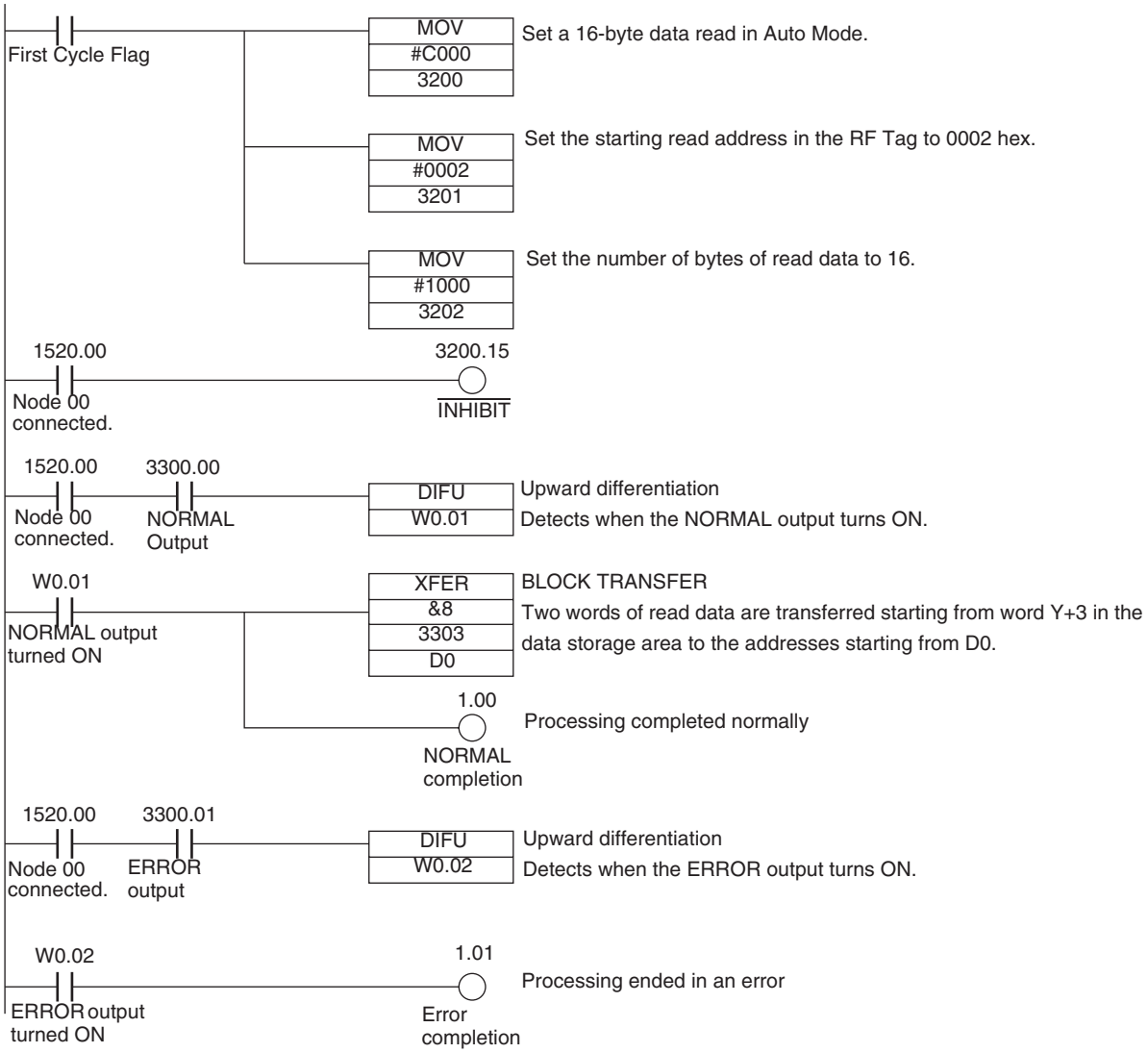

CHECK! For information on the timing chart in Auto Mode, refer to *Mode Switch Settings 3 and 4 (V600-compatible Trigger Mode)*in this section.
p.74

MEMO

Section 6
Troubleshooting

Handling Errors	84
Errors and Countermeasures	85
Maintenance and Inspection	86

Handling Errors

Check the status of the ID Slave network and hardware by using the MS and NS operation indicators.

MS Indicator (Moudule Status)

		Error	Corrective action
	Lit red	Fatal error	Error from which recovery is not possible. Replace the ID Slave.
	Flashing red	Non-fatal error	Error from which recovery is possible (node address switch setting error). Recovery is possible by making the settings again.

NS Indicator (Network Status)

		Error	Corrective action
	Lit red	Fatal communications error	Communications are not possible (e.f., duplicate node address or bus OFF detection).
	Flashing red	Non-fatal error	Communications timeout

RFID-function Errors

When the ERR indicator lights, check the indicators from bit 7to bit 0 or the error output for errors relating to RFID functions, and then take suitable actions

Indicator	Output bits	Error	Corrective action
Bit 0 Flashing red	Error End + 72_ERR	An RF Tag could not be detected in Trigger Mode.	Change the control timing so that communications can be started while the RF Tag is within the Antenna's interrogation zone. Measure the noise and take suitable noise countermeasures. Check the effect of surrounding metal and make sure that the desired communications range can be obtained.
Bit 1 Flashing red	Error End + 70_ERR	RF Tag was detected in Trigger Mode but communications could not be ended normally.	Change the control timing so that communications can be started while the RF Tag is within the Antenna's interrogation zone. Measure the noise and take suitable noise countermeasures. Check the effect of surrounding metal and make sure that the desired communications range can be obtained.
Bit 2 Flashing red	Error End + 7A_ERR	The command specified a memory area outside the RF Tag memory range.	Set the command memory area within the RF Tag memory range.
Bit 3 Flashing red	Error End + 7D_ERR	The command specified data to be written to the write-protected area of RF Tag.	Set the command memory area to outside the write-protected area.
Bit 4 Flashing red	Error End + 71_ERR	• Data was not correctly written to RF Tag. • The data in the RF Tag is not ASCII.	• Retry the writing process. If the error persists, replace the RF Tag. • Enable ASCII/hex conversion and overwrite the data in the relevant area.
Bit 5 Flashing red	Error End + ID 79, 7E_ERR	RF Tag used is not supported by the ID Slave.	Change the RF Tag to one supported by the ID Slave.
Bit 6 Flashing red	Error End + ID 7F_ERR		
Bit 0 and bit 4 Flashing red	Error End + CMD_ERR	There is an error with the execution command, or the command cannot not be received.	Check the command, address, and number of bytes to process.
Bit 7 to bit 0 Lit red	Error End + SYS_ERR	The ID Slave cannot operate.	If the error continues after resetting the power, replace the ID Slave.
Bit 7 to bit 0 Flashing red	Error End + no output	Mode switch setting error	Set the mode switch correctly.

Errors and Countermeasures

The four main causes of problems that may occur in the ID Slave are as follows:

- Noise interference · · · · · · · · · · · · · Take adequate countermeasures against noise.
- External device failure
- ID Slave failure
- Others

} · · · · · · · Repairs are required.

■ Noise Interference

If the system malfunctions due to noise, refer to the following table and take appropriate countermeasures.

No.	Occurrence of fault	Possible cause	Countermeasure
1	Occurs when a heavy-duty motor, transformer, or capacitor is turned ON.	An instantaneous voltage drop due to inrush current to the heavy load.	Increase the capacity of the power supply and the size of the power cable.
		Common mode noise as a result of the above cause.	• Provide the power through a 1-to-1 non-grounded insulating transformer. • Do not use the same ground as other large-capacity devices. Independently ground the Controller at a resistance of 100 Ω or less. (See figure1.)
2	Occurs irregularly.	Noise on power line	Provide the power through a 1-to-1 non-grounded insulating transformer or noise filter. (See figure 2.)
3	Malfunction such as input signal turning ON when it should be OFF.	Inductive noise on input line	• Separate input signal from power lines. • If there is a lot of noise interference, put the input line inside a grounded metal conduit or use shielded cable.

1. Improvement in Grounding

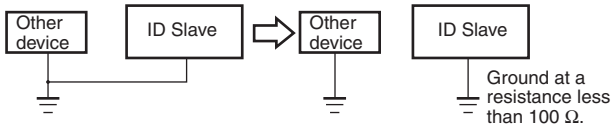

2. Countermeasures Against Noise on Power Line

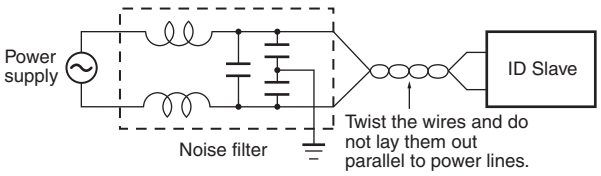

Maintenance and Inspection

The ID Slave must be inspected on a daily or regular basis so that the functions can be used in good condition. The ID Slave consists of semiconductors that last almost indefinitely. The following malfunctions may, however, result due to the operating environment and conditions.

(1) Element deterioration due to overvoltage or overcurrent.
(2) Element deterioration due to continuous stress caused by high ambient temperature.
(3) Connector contact faults or insulation deterioration due to humidity and dust.
(4) Connector contact faults or element corrosion due to corrosive gas.

n Inspection Items

No.	Item	Detail	Criteria	Required equipment
1	Supply voltage fluctuation	(1) Check that the supply voltage fluctuation at the power supply terminal block is within the permissible range.	Within supply voltage specified range	Multimeter
		(2) Check that there are no frequent instantaneous power failures or radical voltage fluctuations.	Within permissible voltage fluctuation range	Power supply analyzer
2	Ambient environment (a) Temperature (b) Humidity (c) Vibration and shock (d) Dust (e) Corrosive gas	(a) Within the specified range (b) Within the specified range (c) Influence of vibration or impact of machines (d) Check that the system is free of accumulated dust and foreign particles. (e) Check that no metal part of the system is discolored or corroded.	(a) –10 to 55°C (b) 25% to 85% (c) Within the specified range (d) Neither is permitted. (e) Neither is permitted.	Maximum and minimum thermometer Hygrometer
3	Panel condition (a) Ventilation (b) Damage to packing for any enclosed construction	(a) Check that the system is ventilated properly with natural ventilation, forced ventilation, or cooling air. (b) Check that the panel packing is properly attached with no damage.	(a) The interior temperature must be within a range between –10 and 55°C with proper ventilation. (b) The packing must have no damage.	---
4	I/O power supply (a) Voltage fluctuation (b) Ripple	Check on the I/O terminal block that the voltage fluctuation and ripple are within the permissible ranges.	Within the specified range	Multimeter Oscilloscope
5	Mounting condition	(1) Check that each device is securely mounted.	No loose screws	---
		(2) Check that each connector is fully inserted.	Each connector must be locked or securely tightened with screws.	---
		(3) Check that no wire is broken or nearly broken.	Must be no wire that is broken or nearly broken.	---
		(4) Check that the distance between the RF Tag and Antenna is within the specified range.	Within the specified range	---
6	RF Tag life	Manage the number of times the RF Tag has been written	Do not allow the specified maximum number of overwrites to be exceeded.	---

Section 7
Appendices

Product Specifications	88
Characteristics	122
Reference Data	167
RF Tag Memory Map	217
RF Tag Memory Capacities and Memory Types	218
Multi-vendor Use	219
Chemical Resistance of the Antennas	225
Chemical Resistance of RF Tags	226
Degree of Protection	231

Product Specifications

ID Slave

■ General Specifications

V680-HAM42-DRT

Item / Model	V680-HAM42-DRT
Supply voltage	24 VDC +10%/–15%, Ripple (p-p): 10% max.
Power consumption	4 W max. (supply voltage: 24 VDC, current consumption: 0.2 A Max.)
Ambient operating temperature	–10 to 55°C (with no icing)
Ambient storage temperature	–25 to 65°C (with no icing)
Ambient operating humidity	25% to 85% (with no condensation)
Insulation resistance	20 MΩ min. (at 500 VDC) between I/O terminals and grand, between I/O terminals and case
Dielectric strength	1000 VAC (50/60 Hz) for 1 minute between I/O terminals and grand, between I/O terminals and case
Vibration resistance	10 to 150 Hz, 0.2-mm double amplitude, acceleration: 15 m/s², 10 sweeps in each 3 directions (up/down, left/right, and forward/backward) for 8 minutes each
Shock resistance	150 m/s², 3 times each in 6 directions (Total: 18 times)
Dimensions	65 × 65 × 65 mm (excluding protruding parts)
Degree of protection	Panel-mounting (IEC60529: IP20)
Material	PC + ABS
Weight	Approx. 150 g
Mounting method	DIN Track

■ Dimensions

V680-HAM42-DRT

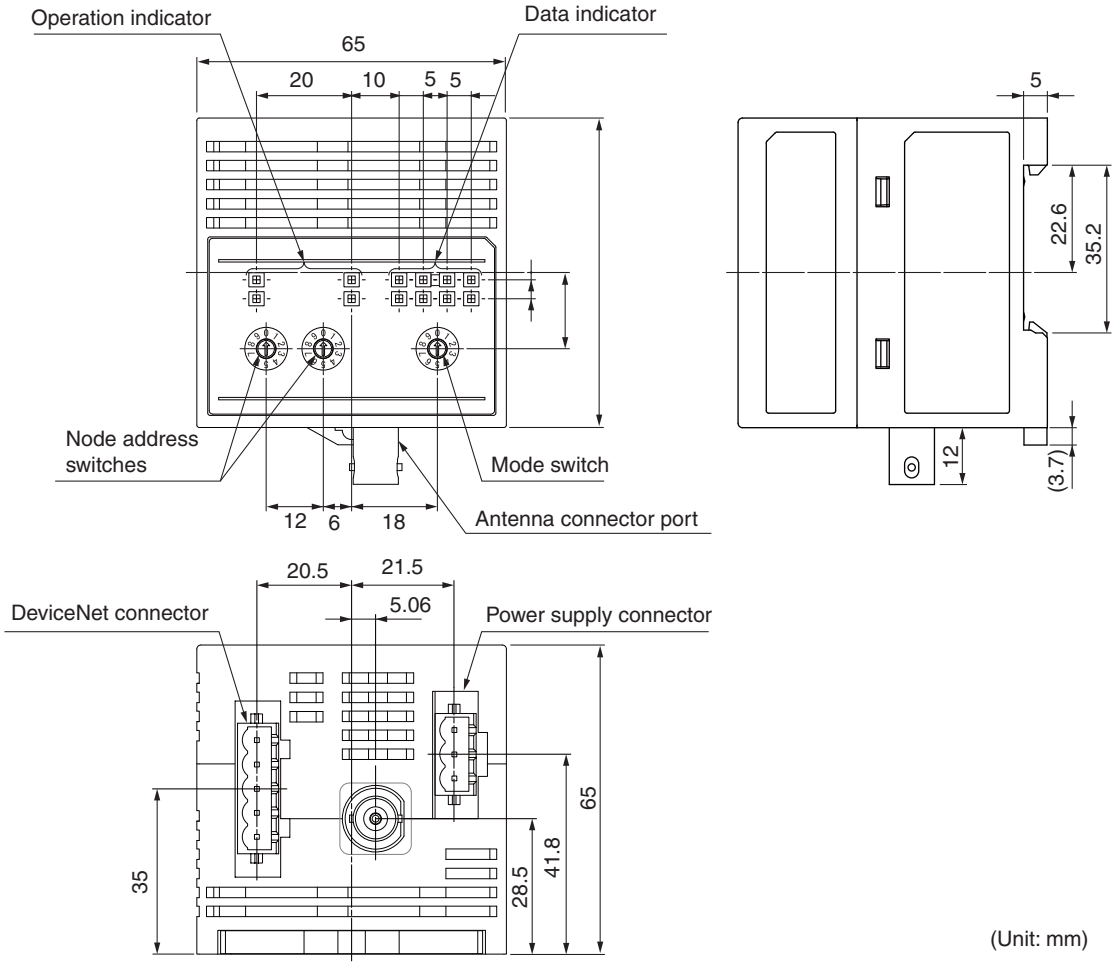

(Unit: mm)

Case material	PC + ABS

Antenna

Four models of Antennas can be used with ID Slave. Select the best Antenna for the application.

■ V680-HS51

▪ General Specifications

Item / Model	V680-HS51
Ambient operating temperature	–10 to 60°C (with no icing)
Ambient storage temperature	–25 to 75°C (with no icing)
Ambient operating humidity	35% to 95% (with no condensation)
Insulation resistance	20 MΩ min. (at 500 VDC) between cable terminals and case
Dielectric strength	1,000 VAC, 50/60Hz for 1 min between cable terminals and case
Degree of protection	IP67 (IEC 60529:2001), Oil resistance equivalent to IP67G (JIS C 0920:2003, Appendix 1) (Antenna portion)See Note1.
Vibration resistance	10 to 2,000 Hz, 1.5-mm double amplitude, acceleration: 150 m/s², 10 sweeps in each of 3 directions (up/down, left/right, and forward/backward) for 15 minutes each
Shock resistance	1,000 m/s², 3 times each in 6 directions (Total: 18 times)
Dimensions	M12 × 35 mm
Material	ABS, brass, and epoxy resin filling
Weight	Approx. 55 g
Cable length	Standard length of 2 m

Note.1 The Connector is not waterproof. Oil resistance has been tested using a specific oil as defined in the OMRON test method.

■ Dimensions

(Unit: mm)

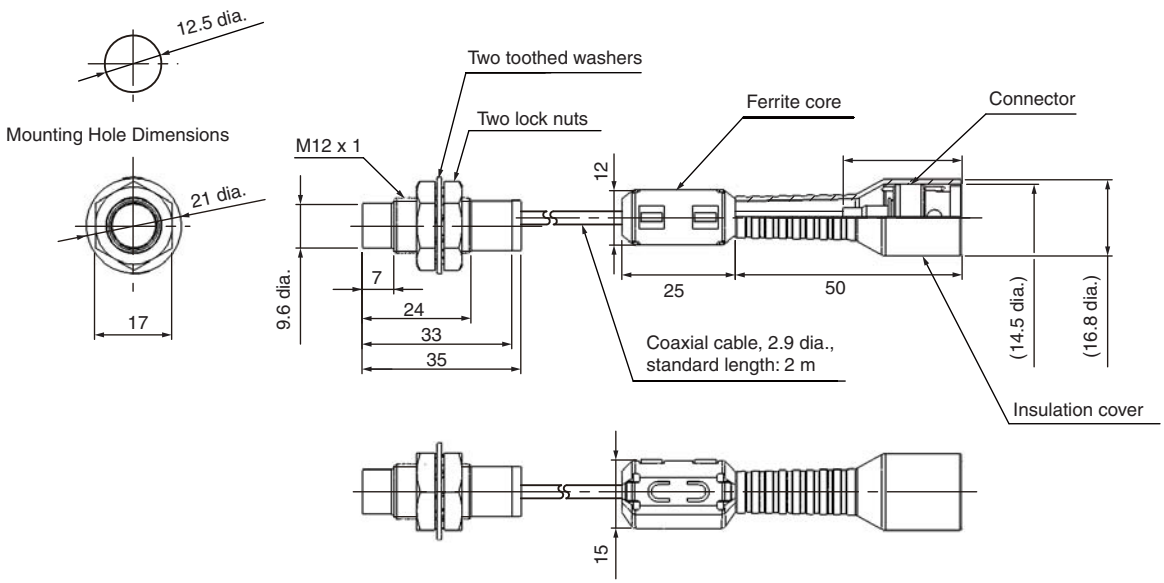

Case material	Brass
Communications surface	ABS resin
Filling resin	Epoxy resin
Cable	PVC (black)

■V680-HS52-W/R

・General Specifications

Item Model	V680-HS52-W (Standard cable, waterproof connector)	V680-HS52-R (Flexible cable, non-waterproof connector)
Ambient operating temperature	−10 to 60°C (with no icing)	
Ambient storage temperature	−25 to 75°C (with no icing)	
Ambient operating humidity	35% to 95% (with no condensation)	
Insulation resistance	20 MΩ min. (at 500 VDC) between cable terminals and the case	
Dielectric strength	1,000 VAC, 50/60 Hz for 1 min between cable terminals and case	
Degree of protection	IP67 (IEC 60529:2001), Oil resistance equivalent to IP67G (JIS C 0920:2003, Appendix 1) (Antenna portion)See Note 1.	IP67 (IEC 60529:2001), Oil resistance equivalent to IP67G (JIS C 0920:2003, Appendix 1) (Antenna portion)See Note 2.
Vibration resistance	10 to 500 Hz, 1.5-mm double amplitude, acceleration: 100 m/s², 1 sweep in each 3 directions (up/down, left/right, and forward/backward) for 8 minutes each	
Shock resistance	500 m/s², 3 times each in 6 directions (Total: 18 times)	
Dimensions	M22 ×65 mm	
Material	ABS resin, brass, and epoxy resin filler	
Weight	Approx. 850 g (with 12.5-m cable)	
Cable length	Standard lengths of 2 and 12.5 m	

Note 1. The degree of protection for the Connector is IP67/IP65. Oil resistance has been tested using a specific oil as defined in the OMRON test method.
2. The Connector is not waterproof. Oil resistance has been tested using a specific oil as defined in the OMRON test method.

■V680-HS61

・General Specifications

Item Model	V680-HS61
Ambient operating temperature	-10 to 60 °C (with no icing)
Ambient storage temperature	-25 to 75 °C (with no icing)
Ambient operating humidity	35% to 95% (with no condensation)
Insulation resistance	20 MΩ min. (at 500 VDC) between cable terminals and the case
Dielectric strength	1,000 VAC, 50/60 Hz for 1 min between cable terminals and case
Degree of protection	IP67 (IEC 60529:2001), Oil resistance equivalent to IP67G (JIS C 0920:2003, Appendix 1) (Antenna portion)See Note 1.
Vibration resistance	10 to 500 Hz, 1.5- mm double amplitude, acceleration: 100 m/s², 1 sweep in each 3 directions (up/down, left/right, and forward/backward) for 11minutes each
Shock resistance	500 m/s², 3 times each in 6 directions (Total: 18 times)
Dimension	18×30.5×10 mm
Material	ABS resin, brass, and epoxy resin filler
Weight	Approx. 68 g
Cable length	Standard lengths of 2 m

Note 1. The degree of protection for the Connector is IP67/IP65. Oil resistance has been tested using a specific oil as defined in the OMRON test method. The ID Flag Sensor is not waterproof. Do not use it in an environment where mist is present.

▪ Dimensions

V680-HS52-W

(Unit: mm)

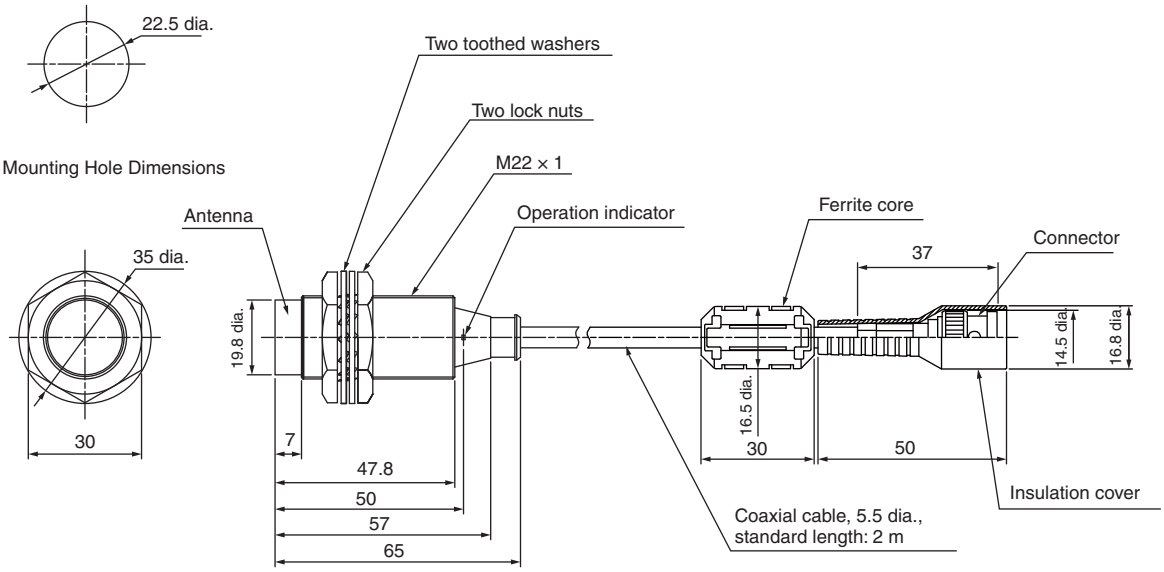

Case material	Brass
Communications surface	ABS resin
Filling resin	Epoxy resin
Cable	PVC (gray)

V680-HS52-R

(Unit: mm)

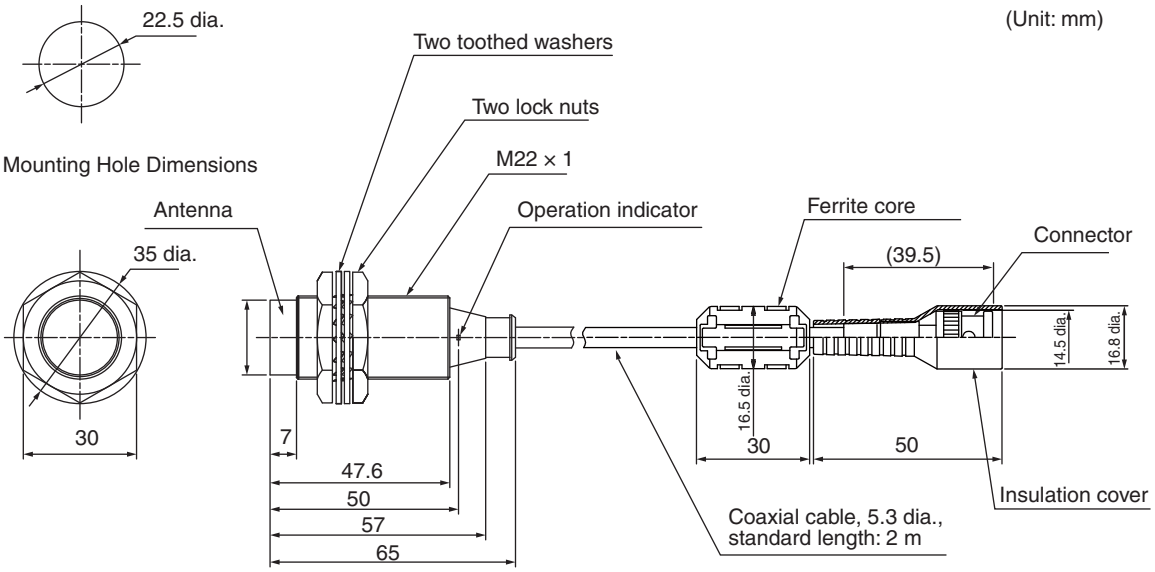

Case material	Brass
Communications surface	ABS resin
Filling resin	Epoxy resin
Cable	PVC (black)

V680-HS61

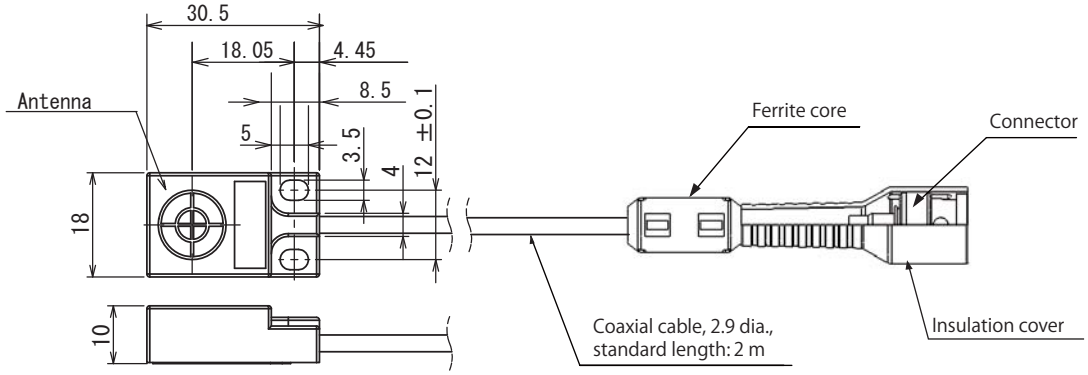

(Unit: mm)

Case material	ABS resin
Filling resin	Epoxy resin
Cable	PVC (black)

■V680-HS63-W/R

・General Specifications

Item / Model	V680-HS63-W (Standard cable, waterproof connector)	V680-HS63-R (Flexible cable, non-waterproof connector)
Ambient operating temperature	−10 to 60°C (with no icing)	
Ambient storage temperature	−25 to 75°C (with no icing)	
Ambient operating humidity	35% to 95% (with no condensation)	
Insulation resistance	20 MΩ min. (at 500 VDC) between cable terminals and case	
Dielectric strength	1,000 VAC, 50/60 Hz for 1 min between cable terminals and case	
Degree of protection	IP67 (IEC 60529:2001), Oil resistance equivalent to IP67G (JIS C 0920:2003, Appendix 1) (Antenna portion) See Note 1.	IP67 (IEC 60529:2001), Oil resistance equivalent to IP67G (JIS C 0920:2003, Appendix 1) (Antenna portion) See Note 2.
Vibration resistance	10 to 500 Hz, 1.5-mm double amplitude, acceleration: 100 m/s², 10 sweeps in each of 3 directions up/down, left/right, and forward/backward) for 11 minutes each	
Shock resistance	500 m/s², 3 times each in 6 directions (Total: 18 times)	
Dimensions	40 ×53 ×23 mm	
Material	ABS resin case, epoxy resin filler	
Weight	Approx. 850 g (with 12.5-m cable)	
Cable length	Standard lengths of 2 and 12.5 m	

Note 1. The degree of protection for the Connector is IP67/IP65. Oil resistance has been tested usi ng a specific oil as defined in the OMRON test method.
2. The Connector is not waterproof. Oil resistance has been tested using a specific oil as defined in the OMRON test method.

▪ Dimensions

V680-HS63-W

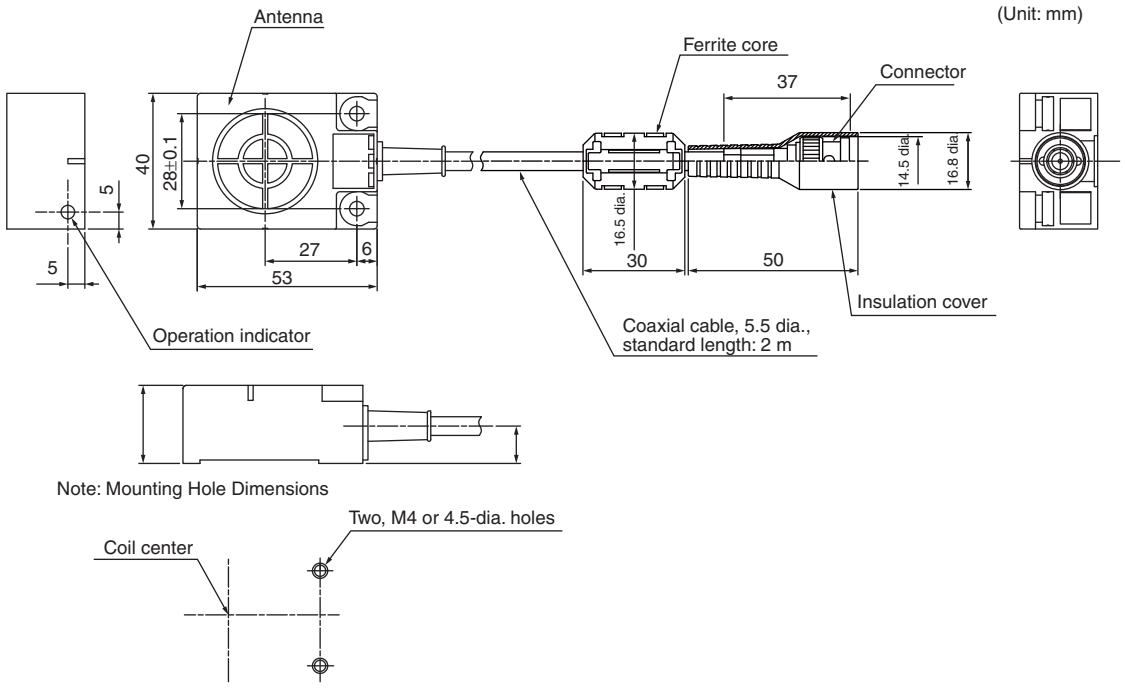

Case material	ABS resin
Filling resin	Epoxy resin
Cable	PVC (gray)

V680-HS63-R

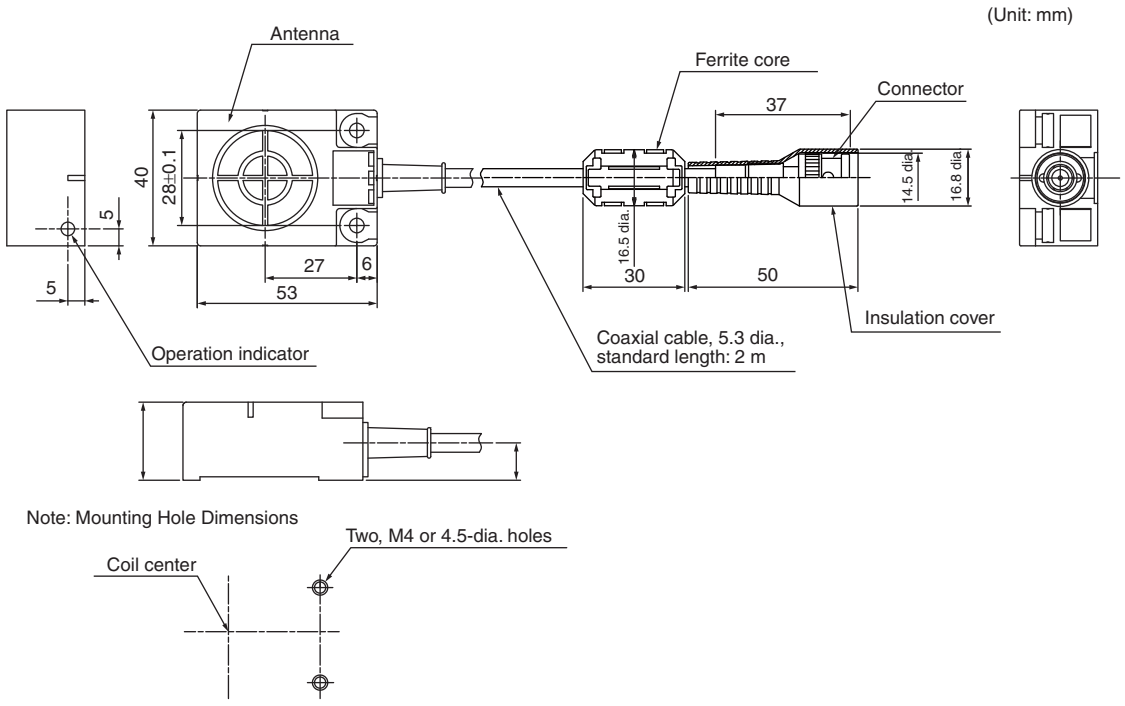

Case material	ABS resin
Filling resin	Epoxy resin
Cable	PVC (black)

■ V680-HS65-W/R

▪ General Specifications

Item / Model	V680-HS65-W (Standard cable, waterproof connector)	V680-HS65-R (Flexible cable, non-waterproof connector)
Ambient operating temperature	–25 to 70°C (with no icing)	
Ambient storage temperature	–40 to 85°C (with no icing)	
Ambient operating humidity	35% to 95% (with no condensation)	
Insulation resistance	20 MΩ min. (at 500 VDC) between cable terminals and case	
Dielectric strength	1,000 VAC, 50/60 Hz for 1 min between connector terminals and case	
Degree of protection	IP67 (IEC 60529:2001), Oil resistance equivalent to IP67G (JIS C 0920:2003, Appendix 1) (Antenna portion) See Note 1.	IP67 (IEC 60529:2001), Oil resistance equivalent to IP67G (JIS C 0920:2003, Appendix 1) (Antenna portion) See Note 2.
Vibration resistance	10 to 500 Hz, 1.5-mm double amplitude, acceleration: 100 m/s², 10 sweeps in each of 3 directions up/down, left/right, and forward/backward) for 11 minutes each	
Shock resistance	500 m/s², 3 times each in 6 directions (Total: 18 times)	
Dimensions	100 × 100 × 30 mm	
Material	ABS resin case, epoxy resin filler	
Weight	Approx. 1,100 g (with 12.5-m cable)	
Cable length	Standard lengths of 2 and 12.5 m	

Note 1. The degree of protection for the Connector is IP67/IP65. Oil resistance has been tested using a specific oil as defined in the OMRON test method.

2. The Connector is not waterproof. Oil resistance has been tested using a specific oil as defined in the OMRON test method.

▪ Dimensions

V680-HS65-W

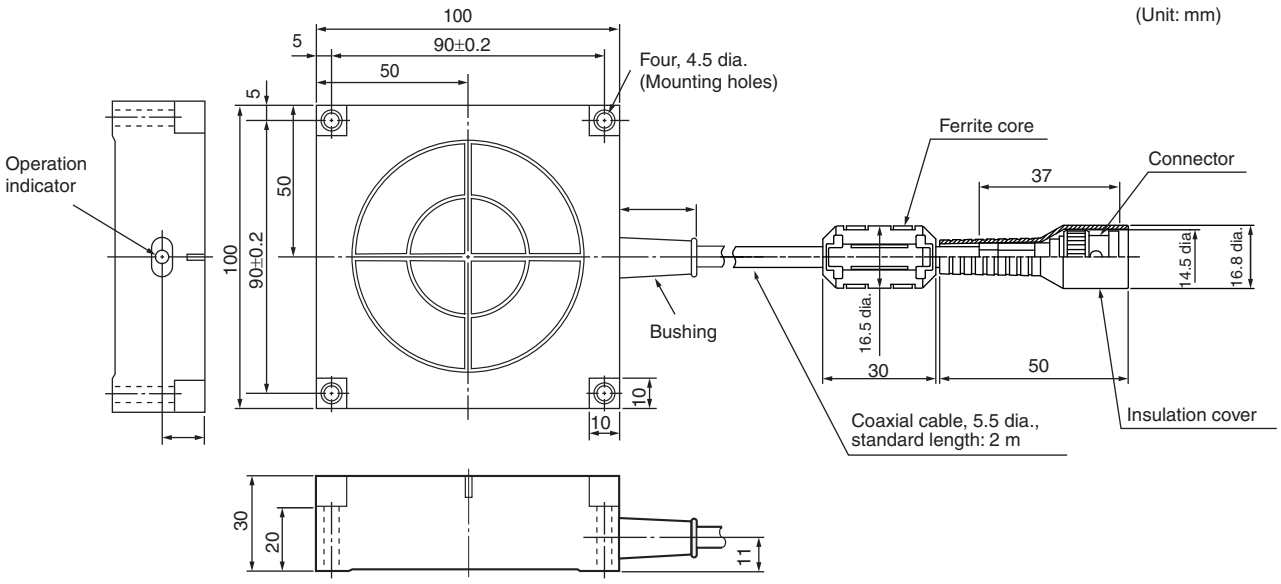

Case material	ABS resin
Filling resin	Epoxy resin
Cable	PVC (gray)

V680-HS65-R

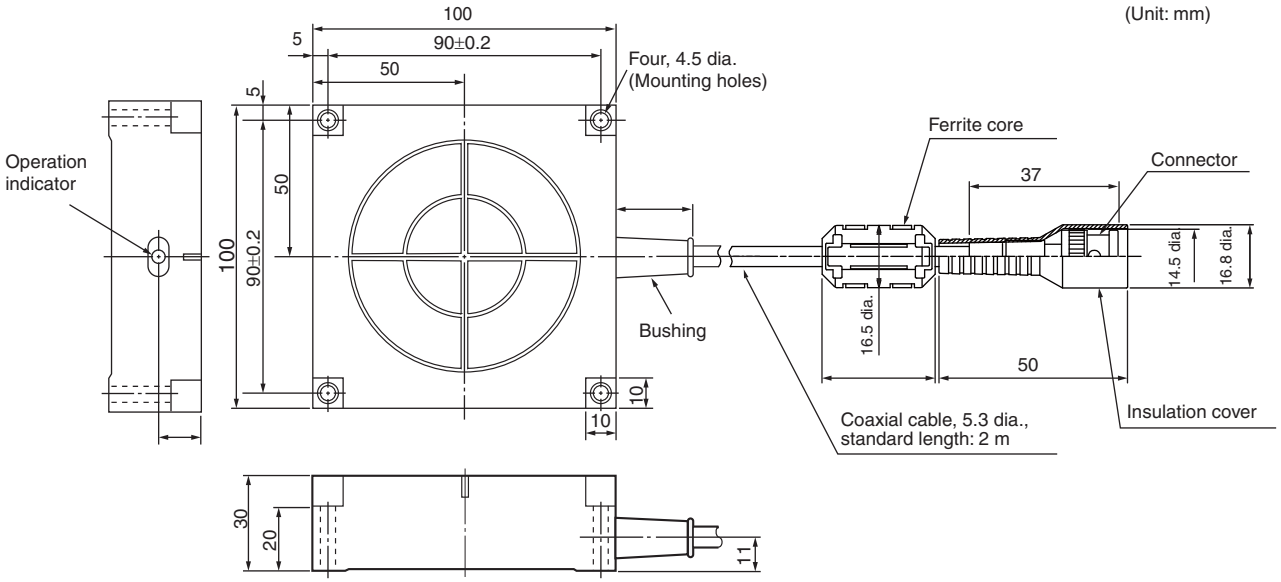

Case material	ABS resin
Filling resin	Epoxy resin
Cable	PVC (black)

RF Tags

■ V680-D1KP52MT

▪ General Specifications

Item / Model	V680-D1KP52MT
Memory capacity	1,000 bytes (user area)
Memory type	EEPROM
Data Retention	10 years after writing (85°C or less), 0.5 years after writing (85 to 125°C) Total data retention at high temperatures exceeding 125°C is 10 hours See Note 1
Write Endurance	100,000 times per block (25°C)
Ambient operating temperature when communicating	–25 to 85°C (with no icing)
Ambient storage temperature (with data retention)	–40 to 125°C (with no icing)
Ambient operating humidity	35% to 95%
Degree of protection	IP68 (IEC 60529:2001), Oil resistance equivalent to IP67G (JIS C 0920:2003, Appendix 1) See Note 2.
Vibration resistance	10 to 2,000 Hz, 1.5-mm double amplitude, acceleration: 150 m/s², 10 sweeps each in X, Y, and Z directions for 15 minutes each
Shock resistance	500 m/s², 3 times each in X, Y, and Z directions (Total: 18 times)
Dimensions	8 dia. × 5 mm
Materials	Case: PPS resin, Filling resin: Epoxy resin
Weight	Approx. 0.5 g
Metal countermeasures	Yes

Note 1. After string data at high temperatures, rewrite the data even if changes are not required, high temperatures are those exceeding 125°C up to 180°C.

2. Oil resistance has been tested using a specific oil as defined in the OMRON test method.

▪ Dimensions

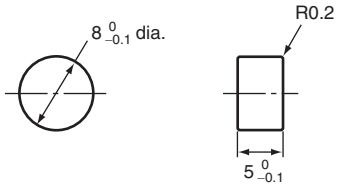

(Unit: mm)

Case material	ABS resin
Filling resin	Epoxy resin

CHECK! When embedding the V680-D1KP52MT into a metal surface, use the V680-HS51/-HS52 Antenna. Communications will not be possible if the V680-HS63 Antenna is used.

CHECK! The side with the markings is the communications surface. Mount the RF Tag with this side facing the Antenna.

CHECK! The ID code is written in the memory of the RF Tag and may be affected by data retention characteristics at high temperatures. Take suitable precautions when using the READ ID command for RF Tags operating at high temperatures.

▪ RF Tag Heat Resistivity

- Storing RF Tags under high temperatures will adversely affect the performance of the internal parts and the service life of the RF Tags.
- An LTPD of 10% was determined during the evaluation for RF Tags that reached the end of their life after testing under the following test conditions.

Heat cycle	−10°C/150°C, 30 minutes each for 1,000 cycles
	−10°C/180°C, 30 minutes each for 200 cycles
High temperatures	150°C 1,000 hours
	180°C, 200 hours

CHECK! LTPD: Lot tolerance percent defective
The lower limit of the malfunction rate for lots to be considered unacceptable during reliability testing.

■ V680-D1KP52M-BT01

▪ General Specifications

Item / Model	V680-D1KP52M-BT01
Memory capacity	1,000 bytes (user area)
Memory type	EEPROM
Data Retention	10 years after writing (85°C or less), 0.5 years after writing (85 to 125°C) Total data retention at high temperatures exceeding 125°C is 10 hours See Note 1
Write Endurance	100,000 times per block (25°C)
Ambient operating temperature when communicating	–25 to 85°C (with no icing)
Ambient storage temperature (with data retention)	–40 to 125°C (with no icing)
Ambient operating humidity	35% to 95%
Degree of protection	IP68 (IEC 60529:2001), Oil resistance equivalent to IP67G (JIS C 0920:2003, Appendix 1) See Note 2.
Vibration resistance	10 to 2,000 Hz, 1.5-mm double amplitude, acceleration: 150 m/s², 10 sweeps each in X, Y, and Z directions for 15 minutes each
Shock resistance	500 m/s², 3 times each in X, Y, and Z directions (Total: 18 times)
Dimensions	Hex Head: 17 HEX × 9.5 mm, Screw: M10 × 10 mm
Materials	Bolt: SUS303, Case (RF Tag): PPS resin, Filling resin (RF Tag): Epoxy resin
Weight	Approx. 25 g
Metal countermeasures	Yes

Note 1. After string data at high temperatures, rewrite the data even if changes are not required, high temperatures are those exceeding 125°C up to 180°C.
2. Oil resistance has been tested using a specific oil as defined in the OMRON test method.

▪ Dimensions

(Unit: mm)

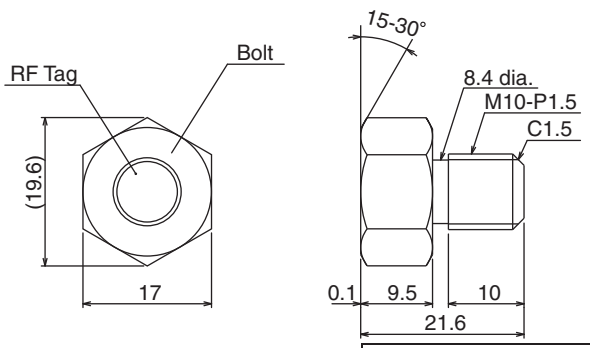

Bolt material	SUS303
Case material (RF Tag)	PPS resin
Filling resin (RF Tag)	Epoxy resin

CHECK! The side with the markings is the communications surface. Mount the RF Tag with this side facing the Antenna.

CHECK! The ID code is written in the memory of the RF Tag and may be affected by data retention characteristics at high temperatures. Take suitable precautions when using the READ ID command for RF Tags operating at high temperatures.

■ V680-D1KP52M-BT11

▪ General Specifications

Item / Model	V680-D1KP52M-BT11
Memory capacity	1,000 bytes (user area)
Memory type	EEPROM
Data Retention	10 years after writing (85°C or less), 0.5 years after writing (85 to 125°C) Total data retention at high temperatures exceeding 125°C is 10 hours See Note 1
Write Endurance	100,000 times per block (25°C)
Ambient operating temperature when communicating	–25 to 85°C (with no icing)
Ambient storage temperature (with data retention)	–40 to 125°C (with no icing)
Ambient operating humidity	35% to 95%
Degree of protection	IP68 (IEC 60529:2001), Oil resistance equivalent to IP67G (JIS C 0920:2003, Appendix 1) See Note 2.
Vibration resistance	10 to 2,000 Hz, 1.5-mm double amplitude, acceleration: 150 m/s², 10 sweeps each in X, Y, and Z directions for 15 minutes each
Shock resistance	500 m/s², 3 times each in X, Y, and Z directions (Total: 18 times)
Dimensions	Hex Head: 13 HEX × 7 mm, Screw: M8 × 10 mm
Materials	Bolt: SUS303, Case (RF Tag): PPS resin, Filling resin (RF Tag): Epoxy resin
Weight	Approx. 10 g
Metal countermeasures	Yes

Note 1. After string data at high temperatures, rewrite the data even if changes are not required, high temperatures are those exceeding 125°C up to 180°C.
2. Oil resistance has been tested using a specific oil as defined in the OMRON test method.

▪ Dimensions

(Unit: mm)

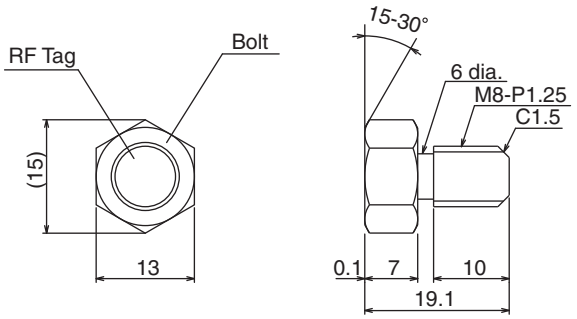

Bolt material	SUS303
Case material (RF Tag)	PPS resin
Filling resin (RF Tag)	Epoxy resin

CHECK! The side with the markings is the communications surface. Mount the RF Tag with this side facing the Antenna.

CHECK! The ID code is written in the memory of the RF Tag and may be affected by data retention characteristics at high temperatures. Take suitable precautions when using the READ ID command for RF Tags operating at high temperatures.

■ V680-D1KP53M

▪ General Specifications

Item / Model	V680-D1KP53M
Memory capacity	1,000 bytes (user area)
Memory type	EEPROM
Data Retention	10 years after writing (85°C or less), 0.5 years after writing (85 to 125°C) Total data retention at high temperatures exceeding 125°C is 10 hours See Note 1
Write Endurance	100,000 times per block (25°C)
Ambient operating temperature when communicating	–25 to 85°C (with no icing)
Ambient storage temperature (with data retention)	–40 to 125°C (with no icing)
Ambient operating humidity	35% to 95%
Degree of protection	IP68 (IEC 60529:2001), Oil resistance equivalent to IP67G (JIS C 0920:2003, Appendix 1) See Note 2.
Vibration resistance	10 to 2,000 Hz, 1.5-mm double amplitude, acceleration: 150 m/s^2, 10 sweeps each in X, Y, and Z directions for 15 minutes each
Shock resistance	500 m/s^2, 3 times each in X, Y, and Z directions (Total: 18 times)
Dimensions	10 dia. × 4.5 mm (DIN698373)
Materials	Case: PPS resin, Filling resin: Epoxy resin
Weight	Approx. 1.0 g
Metal countermeasures	Yes

Note 1. After string data at high temperatures, rewrite the data even if changes are not required, high temperatures are those exceeding 125°C up to 180°C.
2. Oil resistance has been tested using a specific oil as defined in the OMRON test method.

▪ Dimensions

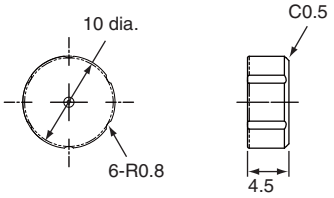

Case material	PPS resin
Filling resin	Epoxy resin

CHECK! When embedding the V680-D1KP53M into a metal surface, use the V680-HS51, V680-HS52 Antenna. Transmission will not be possible if the V680-HS63 Antenna is used.

CHECK! The side with the markings is the communications surface. Mount the RF Tag with this side facing the Antenna.

■ V680-D1KP54T

• General Specifications

Item / Model	V680-D1KP54T
Memory capacity	1,000 bytes (user area)
Memory type	EEPROM
Data Retention	10 years after writing (85°C or less), 0.5 years after writing (85°C to 125°C) Total data retention at high temperatures exceeding 125°C is 10 hours (See note.)
Write Endurance	100,000 times per block (25°C)
Ambient operating temperature when communicating	-25 to 85°C (with no icing)
Ambient storage temperature (with data retention)	-40 to 125°C (with no icing)
Ambient operating humidity	35% to 95%
Degree of protection	IP67 (IEC 60529) Oil resistance equivalent to IP67g according to the former JEM standard.
Vibration resistance	10 to 2,000 Hz, 1.5-mm double amplitude, acceleration: 150 m/s², 10 sweeps each in X, Y, and Z directions for 15 minutes each
Shock resistance	500 m/s², 3 times each in X, Y, and Z directions (Total: 18 times)
Dimensions	20 dia. × 2.7 mm
Materials	PPS resin
Weight	Approx. 2.0 g
Metal countermeasures	None

Note: After string data at high temperatures, rewrite the data even if changes are not required, high temperatures are those exceeding 125°C up to 180°C.

▪ Dimensions

V680-D1KP54T

(Unit : mm)

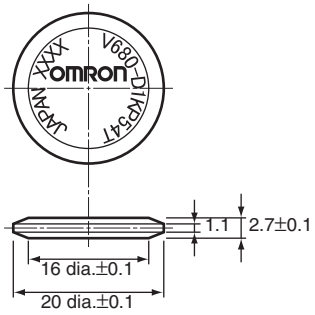

Case material	PPS resin

CHECK! The coin-shaped RF Tag has no directionality, so it can be faced in any direction.

CHECK! The ID code is written in the memory of the RF Tag and may be affected by data retention characteristics at high temperatures. Take suitable precautions when using the READ ID command for RF Tags operating at high temperatures.

V700-A80 Attachment

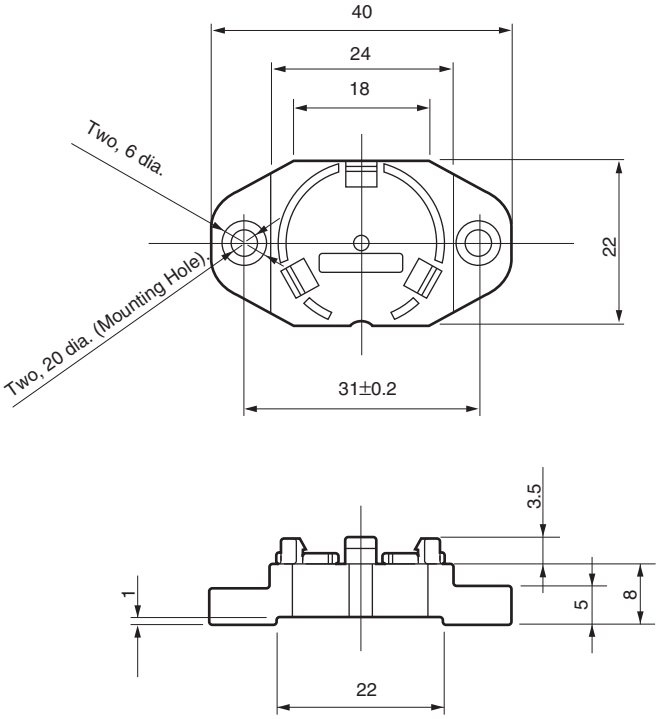

(Unit : mm)

Material	PPS resin

• RF Tag Heat Resistivity

- Storing RF Tags under high temperatures or heat cycle will adversely affect the performance of the internal parts and the service life of the RF Tags.
- An LTPD of 10% was determined during the evaluation for RF Tags that reached the end of their life after testing under the following test conditions.

Heat cycle	-10°C/+150°C, 30 minutes each for 1,000 cycles: Defective number 0/22 piece
	-100°C/+180°C,30 minutes each for 200 cycles: Defective number 0/22 piece
High temperatures	+150°C, 1,000 hours: Defective number 0/22 piece
	+180°C, 200 hours: Defective number 0/22 piece

CHECK!

LTPD: Lot tolerance percent defective
The lower limit of the malfunction rate for lots to be considered unacceptable during reliability testing.

■ V680-D1KP66T/-D1KP66MT

▪ General Specifications

Item / Model	V680-D1KP66T	V680-D1KP66MT
Memory capacity	1,000 bytes (user area)	
Memory type	EEPROM	
Data Retention	10 years after writing (85°C or less), 2.5 years after writing (85 to 125°C) Total data retention at high temperatures exceeding 125°C is 10 hours See Note 1	
Write Endurance	100,000 times per block (25°C)	
Ambient operating temperature	–25 to 85°C (with no icing)	
Ambient storage temperature (with data retention)	–40 to 125°C (with no icing)	
Ambient operating humidity	35% to 95%	
Degree of protection	IP68 (IEC 60529:2001), Oil resistance equivalent to IP67G (JIS C 0920:2003, Appendix 1) See Note 2.	
Vibration resistance	10 to 2,000 Hz, 1.5-mm double amplitude, acceleration: 150 m/s², 10 sweeps each in X, Y, and Z directions for 15 minutes each	
Shock resistance	500 m/s², 3 times each in X, Y, and Z directions (Total: 18 times)	
Dimensions	34 × 34 × 3.5 mm	
Materials	Case: PPS resin	
Weight	Approx. 6 g	Approx. 7.5 g
Metal countermeasures	None	Yes

Note 1. After string data at high temperatures, rewrite the data even if changes are not required, high temperatures are those exceeding 125°C up to 180°C.
2. Oil resistance has been tested using a specific oil as defined in the OMRON test method.

The V680-D1KP66MT is designed to be mounted directly to metal. The V680-D1KP66T and V680-D1KP66MT markings are shown in the following diagrams.

● V680-D1KP66MT

● V680-D1KP66T

CHECK!

The side with the markings is the communications surface. Mount the RF Tag with this side facing the Antenna.

▪ Dimensions

V680-D1KP66T/-D1KP66MT

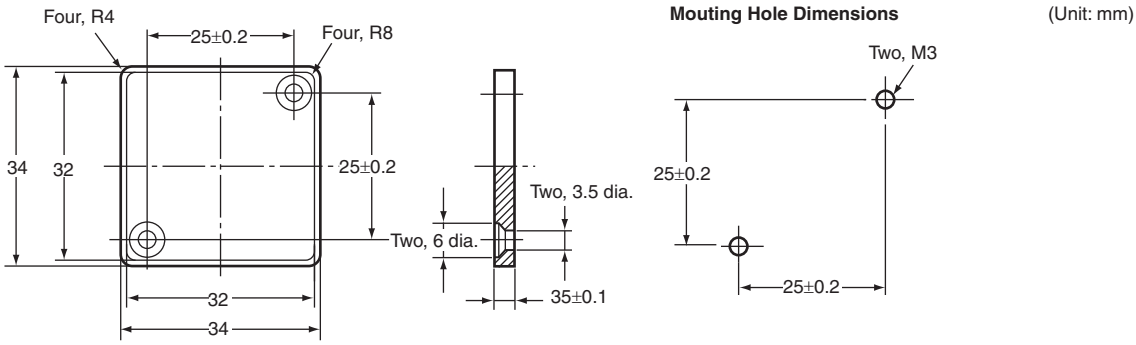

Case material	PPS resin

V600-A86 Attachment

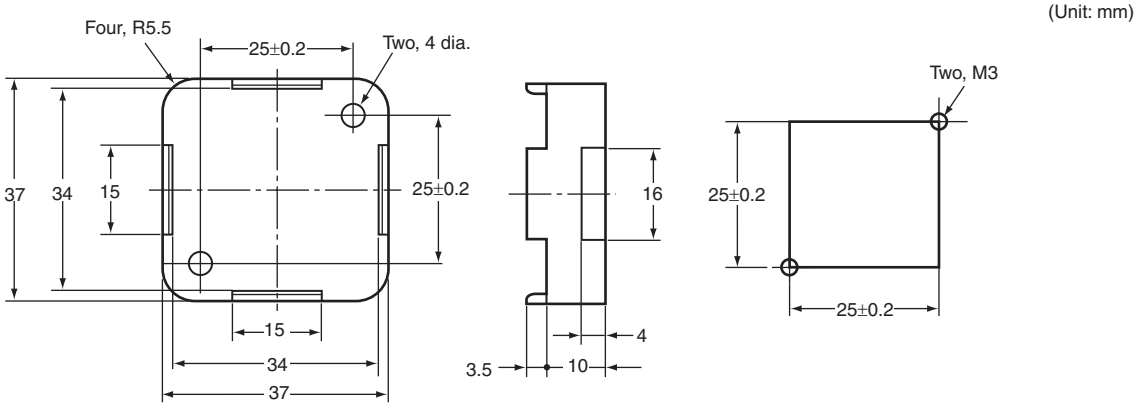

Case material	PPS resin

▪ RF Tag Heat Resistivity

- Storing RF Tags under high temperatures will adversely affect the performance of the internal parts and the service life of the RF Tags.
- An LTPD of 10% was determined during the evaluation for RF Tags that reached the end of their life after testing under the following test conditions.

Heat cycle	–10°C/150°C, 30 minutes each for 1,000 cycles
	–10°C/180°C, 30 minutes each for 200 cycles
High temperatures	150°C 1,000 hours
	180°C, 200 hours

CHECK!

LTPD: Lot tolerance percent defective
The lower limit of the malfunction rate for lots to be considered unacceptable during reliability testing.

■ V680-D1KP66T-SP

▪ General Specifications

Item	Specifications
Memory capacity	1,000 bytes
Memory type	EEPROM
Data Retention	10 years after writing (85°C or less)
Write Endurance	100,000 times per block (25°C)
Ambient operating temperature	When communicating: –25 to 70°C (with no icing) When not communicating: –40 to 110°C (with no icing)
Ambient operating humidity	35% to 95% (with no condensation)
Ambient storage temperature	–40 to 110°C (with no icing)
Ambient storage humidity	35% to 95% (with no condensation)
Vibration resistance	10 to 2,000 Hz, 1.5-mm double amplitude, acceleration: 150 m/s², 10 sweeps each in X, Y, and Z directions for 15 minutes each
Shock resistance	500 m/s², 3 times each in X, Y, and Z directions (Total: 18 times)
Dimensions	95 × 36.5 × 6.5 mm (excluding protruding parts)
Degree of protection	IP67
Material	External coating: Fluororesin (PFA) RF Tag body: PPS resin
Weight	Approx. 20 g
Mounting method	Two M5 screws
Metal countermeasures	None

▪ Dimensions

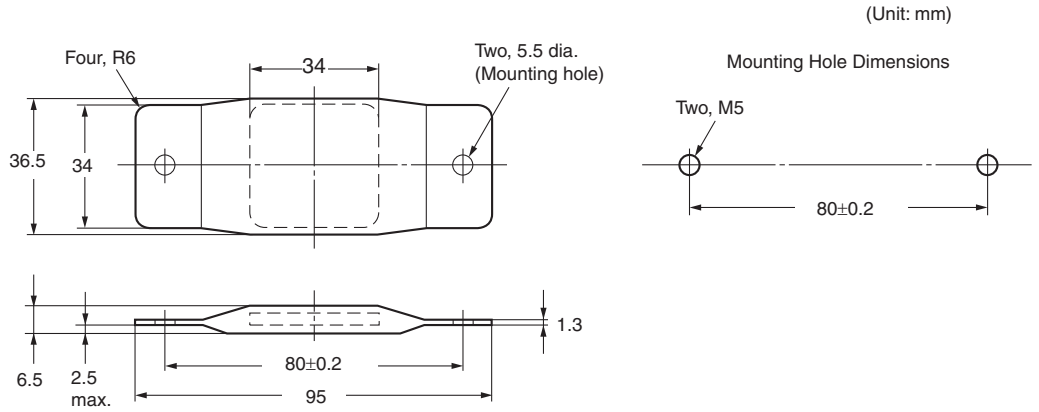

Case material	PFA resin

■ V680-D1KP58HTN

• General Specifications

Item / Model	V680-D1KP58HTN
Memory capacity	1,000 bytes (user area)
Memory type	EEPROM
Data Retention	10 years after writing (85°C or less), 0.5 years after writing (85 to 125°C) Total data retention at high temperatures exceeding 125°C is 10 hours
Write Endurance	100,000 times per block (25°C)
Ambient operating temperature	-25 to 85°C (with no icing)
Ambient storage temperature	-40 to 250°C (with no icing) (Data retention: -40 to 125°C)
Ambient operating humidity	35% to 95%
Degree of protection	IP67 (IEC 60529:2001), Oil resistance equivalent to IP67G (JIS C 0920:2003, Appendix 1) See Note.
Vibration resistance	10 to 2,000 Hz, 1.5-mm double amplitude, acceleration: 150 m/s^2,10 sweeps each in X, Y, and Z directions for 15 minutes each
Shock resistance	500 m/s^2, 3 times each in X, Y, and Z directions (Total: 18 times)
Materials	Coating: PPS resin
Weight	Approx. 70 g

Note. Oil resistance has been tested using a specific oil as defined in the OMRON test method.

• Dimensions

V680-D1KP58HTN

(Unit: mm)

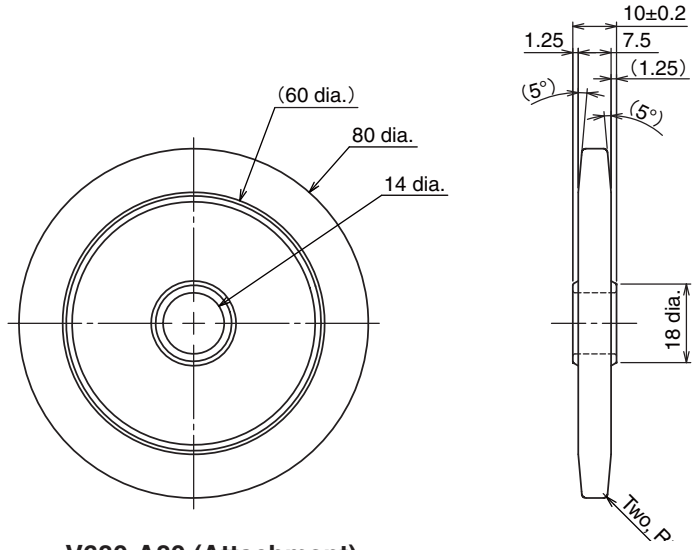

Case material	PPS resin

V680-A80 (Attachment)

This Attachment is specifically designed to secure V680-D1KP58HTN RF Tags to the workpiece.

Applicable RF Tag model: V680-D1KP58HTN

(Unit: mm)

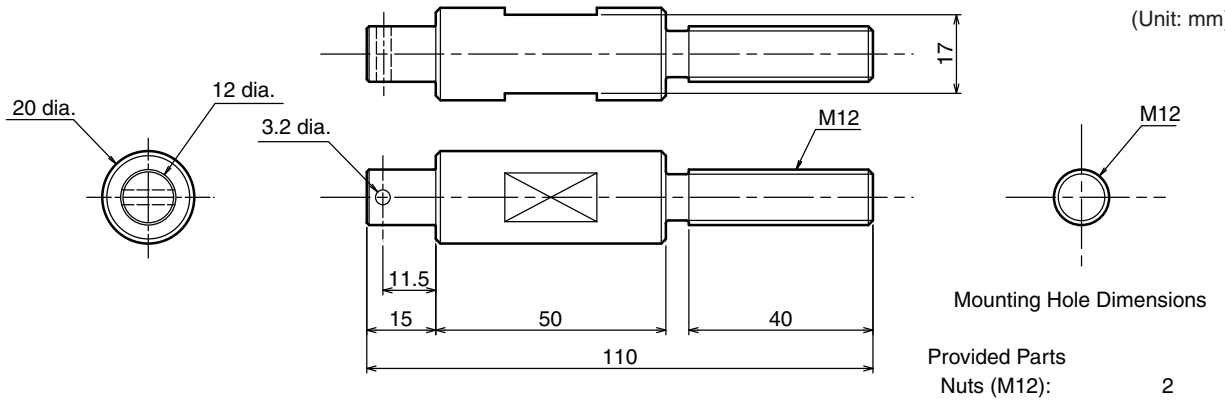

Mounting Hole Dimensions

Provided Parts
Nuts (M12): 2
Split pin (3.2 × 20 mm): 1

■ Use at high temperatures (V680-D1KP58HTN)

▪Data retention

- Data stored in memory in the RF Tag may be lost due to the characteristics of EEPROM, if the accumulated usage time of the RF Tag at a high temperature over 125°C exceeds 10 hours after writing data to the RF Tag. Reset the data retention time before the accumulated usage time exceeds 10 hours.
- An error in communications between the Antenna and the RF Tag may occur in an environment where the ambient operating temperature is 85°C or higher. Do not communicate between the Antenna and the RF Tag in an environment where the ambient operating temperature is 85°C or higher.
- The UID (unique identification number for each RF Tag) may be lost due to the characteristics of EEPROM when the RF tag is used at a high temperature over 125°C. Do not use the commands using UID at a high temperature over 125°C.

•Accumulated time

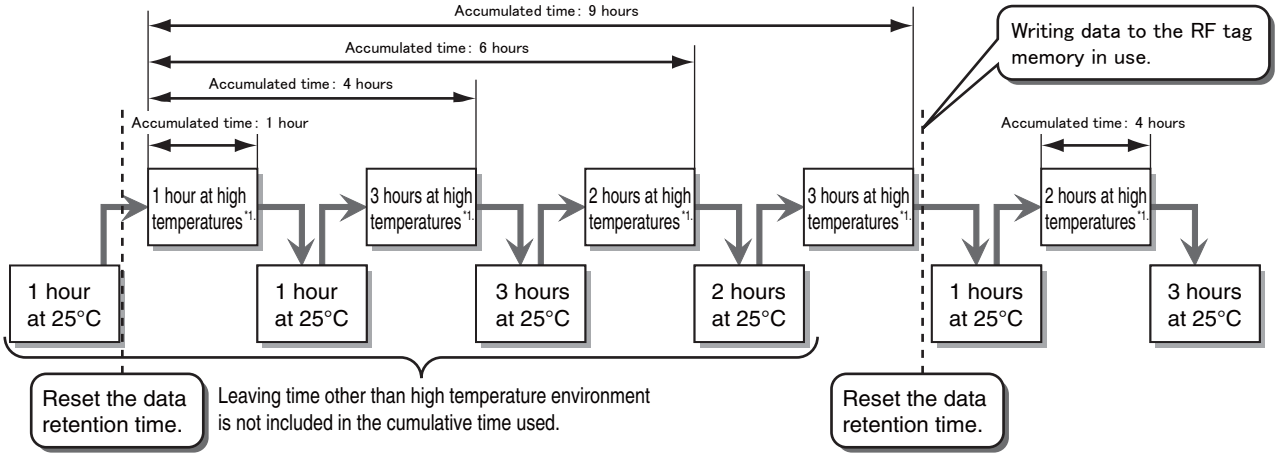

Fig. Concept of resetting the data retention time

*1. High temperatures are those exceeding 125°C up to 250°C.

•Resetting the data retention time

<When using 3 Bytes from the RF Tag addresses 0120Hex.>

1.Reading 3 Bytes of data from the RF tag addresses 0120Hex.
(4-byte Access Mode)

	Bits															
	15	14	13	12	11	10	9	8	7	6	5	4	3	2	1	0
X ch	*	*	*	*	*	*	*	0	0	0	0	0	0	0	1	1
	Change according to settings.							Fixed	DATA READ				3 bytes			
(X+1) ch	0	0	0	0	0	0	0	1	0	0	1	0	0	0	0	0
	Address 120															
(X+2) ch	0	0	0	0	0	0	0	0	0	0	0	0	0	0	0	0
	Fixed															
(X+3) ch	0	0	0	0	0	0	0	0	0	0	0	0	0	0	0	0
	Fixed															

Read start address

	bit15-12	bit11-8
	bit7-4	bit3-0
(X+1)ch	0	1
	2	0

Data of RF tag

Address	bit7-4	bit3-0
0000 hex		
⋮	⋮	⋮
0120 hex	1	2
0121 hex	7	8
0122 hex	A	B
⋮	⋮	⋮

Reading data from the RF tag memory in use.

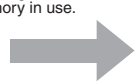

Read data

	bit15-12	bit11-8
	bit7-4	bit3-0
(Y+2)ch	7	8
	1	2
(Y+3)ch	0	0
	A	B

2.Read data written to 3 Bytes of data from the RF tag addresses 0120Hex.
(4-byte Access Mode)

	Bits															
	15	14	13	12	11	10	9	8	7	6	5	4	3	2	1	0
X ch	*	*	*	*	*	*	*	0	0	0	0	1	0	0	1	1
	Change according to settings.							Fixed	DATA WRITE				3 bytes			
(X+1) ch	0	0	0	0	0	0	0	1	0	0	1	0	0	0	0	0
	Address 0120 hex															
(X+2) ch	0	1	1	1	1	0	0	0	0	0	0	1	0	0	1	0
	78 hex								12 hex							
(X+3) ch	0	0	0	0	0	0	0	0	1	0	1	0	1	0	1	1
	Fixed								AB hex							

Write start address

	bit15-12	bit11-8
	bit7-4	bit3-0
(X+1)ch	0	1
	2	0

Write data

	bit15-12	bit11-8
	bit7-4	bit3-0
(X+2)ch	7	8
	1	2
(X+3)ch	0	0
	A	B

Read data written to the RF tag memory in use.

Data of RF tag

Address	bit7-4	bit3-0
0000 hex		
⋮	⋮	⋮
0321 hex	1	2
0322 hex	7	8
0323 hex	A	B
⋮	⋮	⋮

CHECK!

Data retention is reset only data written to the RF tag address.
If you reset the data retention, writes the same data to all of the tag memory in use.

▪ Heat Resistance

Storing RF Tags under high temperatures or heat cycle will adversely affect the performance of the internal parts and the service life of the RF Tags.

Correct operation has been confirmed through the OMRON in-house evaluation for RF Tags under the following high-temperature conditions.

1) 2,000 cycles, where 1 cycle is each 30-minute at Room temperature and 200°C

2) 250°C, 500 hours

• The controller's setting

Please set the latest ID controller to the CA1D mode and use it when the latest ID controller is used together with the old model ID controller Model V680-CA1D/-CA2D.

RF Tag / Controller	V680-D1KP58HT only	V680-D1KP58HT and V680-D1KP58HTN used together	V680-D1KP58HTN only
V680-CA1D/-CA2D only	Not required	Not required	Not required
C680-CA1D/-CA2D and the latest ID controller used together	Not required	Set the latest ID controller to the CA1D mode.	Set the latest ID controller to the CA1D mode.
The latest ID controller only	Not required	Not required	Not required

Note: The latest ID controller:
V680-CA5D01-V2/-CA5D02-V2
V680-CH1D/CHUD/-CH1D-PSI
CS1W-V680C11/-V680C12
CJ1W-V680C11/-V680C12

■ V680-D2KF52M

▪ General Specifications

Item / Model	V680-D2KF52M
Memory capacity	2,000 bytes (user area)
Memory type	FRAM
Data Retention	10 years after writing (55°C or less), 2.9 years after writing (55 to 85°C)
Write Endurance	10 billion times per block (85°C or less). Access frequency See Note 1: 10 billion times
Ambient operating temperature	–25 to 85°C (with no icing)
Ambient storage temperature	–40 to 85°C (with no icing)
Ambient operating humidity	35% to 95%
Degree of protection	IP67 (IEC 60529:2001), Oil resistance equivalent to IP67G (JIS C 0920:2003, Appendix 1) See Note 2.
Vibration resistance	10 to 2,000 Hz, 1.5-mm double amplitude, acceleration: 150 m/s², 10 sweeps each in X, Y, and Z directions for 15 minutes each
Shock resistance	500 m/s², 3 times each in X, Y, and Z directions (Total: 18 times)
Dimensions	8 dia. × 5 mm
Materials	Case: PPS resin, Filling resin: Epoxy resin
Weight	Approx. 0.5 g
Metal countermeasures	Yes

Note 1. The number of accesses is the total number of reads and writes.
2. Oil resistance has been tested using a specific oil as defined in the OMRON test method.

▪ Dimensions

(Unit: mm)

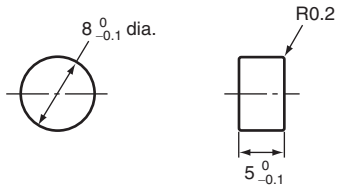

Case material	PPS resin
Filling resin	Epoxy resin

CHECK! When embedding the V680-D2KF52M into a metal surface, use the V680-HS51/-HS52 Antenna. Communications will not be possible if the V680-HS63 Antenna is used.

CHECK! The side with the markings is the communications surface. Mount the RF Tag with this side facing the Antenna.

■ V680-D2KF52M-BT01

▪ General Specifications

Item / Model	V680-D2KF52M-BT01
Memory capacity	2,000 bytes (user area)
Memory type	FRAM
Data Retention	10 years after writing (55°C or less), 2.9 years after writing (55 to 85°C)
Write Endurance	10 billion times per block (85°C or less). Access frequency (See note): 10 billion times
Ambient operating temperature	–25 to 85°C (with no icing)
Ambient storage temperature	–40 to 85°C (with no icing)
Ambient operating humidity	35% to 95%
Degree of protection	IP67 (IEC 60529:2001), Oil resistance equivalent to IP67G (JIS C 0920:2003, Appendix 1) See Note 2.
Vibration resistance	10 to 2,000 Hz, 1.5-mm double amplitude, acceleration: 150 m/s², 10 sweeps each in X, Y, and Z directions for 15 minutes each
Shock resistance	500 m/s², 3 times each in X, Y, and Z directions (Total: 18 times)
Dimensions	Hex Head: 17 HEX × 9.5 mm, Screw: M10 × 10 mm
Materials	Bolt: SUS303, Case (RF Tag): PPS resin, Filling resin (RF Tag): Epoxy resin
Weight	Approx. 25 g
Metal countermeasures	Yes

Note 1. The number of accesses is the total number of reads and writes.
2. Oil resistance has been tested using a specific oil as defined in the OMRON test method.

▪ Dimensions

(Unit: mm)

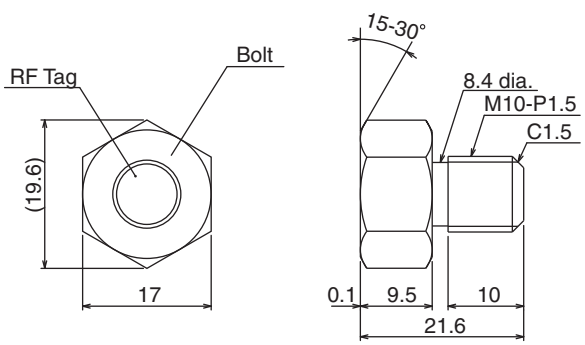

Bolt material	SUS303
Case material (RF Tag)	PPS resin
Filling resin (RF Tag)	Epoxy resin

CHECK!

The side with the markings is the communications surface. Mount the RF Tag with this side facing the Antenna.

■ V680-D2KF52M-BT11

▪ General Specifications

Item / Model	V680-D2KF52M-BT11
Memory capacity	2,000 bytes (user area)
Memory type	FRAM
Data Retention	10 years after writing (55°C or less), 2.9 years after writing (55 to 85°C)
Write Endurance	10 billion times per block (85°C or less). Access frequency See Note 1: 10 billion times
Ambient operating temperature	–25 to 85°C (with no icing)
Ambient storage temperature	–40 to 85°C (with no icing)
Ambient operating humidity	35% to 95%
Degree of protection	IP67 (IEC 60529:2001), Oil resistance equivalent to IP67G (JIS C 0920:2003, Appendix 1) See Note 2.
Vibration resistance	10 to 2,000 Hz, 1.5-mm double amplitude, acceleration: 150 m/s², 10 sweeps each in X, Y, and Z directions for 15 minutes each
Shock resistance	500 m/s², 3 times each in X, Y, and Z directions (Total: 18 times)
Dimensions	Hex Head: 13 HEX × 7 mm, Screw: M8 × 10 mm
Materials	Bolt: SUS303, Case (RF Tag): PPS resin, Filling resin (RF Tag): Epoxy resin
Weight	Approx. 10 g
Metal countermeasures	Yes

Note 1. The number of accesses is the total number of reads and writes.
2. Oil resistance has been tested using a specific oil as defined in the OMRON test method.

▪ Dimensions

(Unit: mm)

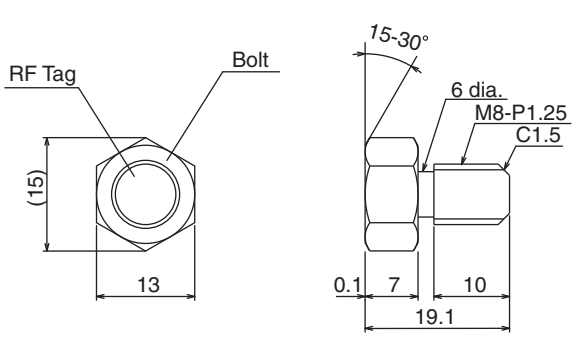

Bolt material	SUS303
Case material (RF Tag)	PPS resin
Filling resin (RF Tag)	Epoxy resin

CHECK!

The side with the markings is the communications surface. Mount the RF Tag with this side facing the Antenna.

■ V680-D8KF67/-D8KF67M

▪ General Specifications

Item / Model	V680-D8KF67	V680-D8KF67M
Memory capacity	8,192 bytes (user area)	
Memory type	FRAM	
Data Retention	10 years after writing (70°C or less), 6 years after writing (70 to 85°C)	
Write Endurance	10 billion times per block (85°C or less). Access frequency[See Note 1]: 10 billion times	
Ambient operating temperature	–20 to 85°C (with no icing)	
Ambient storage temperature	–40 to 85°C (with no icing)	
Ambient operating humidity	35% to 85%	
Degree of protection	IP67 (IEC 60529:2001), Oil resistance equivalent to IP67G (JIS C 0920:2003, Appendix 1) [See Note 2.]	
Vibration resistance	10 to 2,000 Hz, 1.5-mm double amplitude, acceleration: 150 m/s^2,10 sweeps each in X, Y, and Z directions for 15 minutes each	
Shock resistance	500 m/s^2, 3 times each in X, Y, and Z directions (Total: 18 times)	
Dimensions	40 × 40 × 4.5 mm	
Materials	Case: PBT resin	
Weight	Approx. 8 g	Approx. 8.5 g
Metal countermeasures	None	Yes

Note 1. The number of accesses is the total number of reads and writes.
2. Oil resistance has been tested using a specific oil as defined in the OMRON test method.

The V680-D8KF67M is designed to be mounted directly to metal. The V680-D8KF67 and V680-D8KF67M markings are shown in the following diagrams.

● V680-D8KF67M

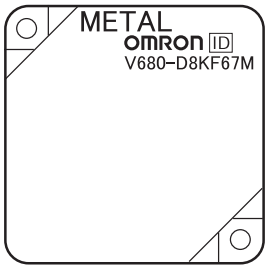

● V680-D8KF67

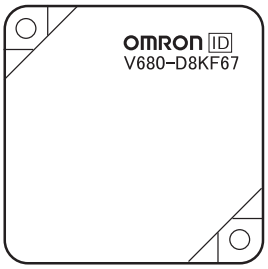

CHECK!

The side with the markings is the communications surface. Mount the RF Tag with this side facing the Antenna.

▪ Dimensions

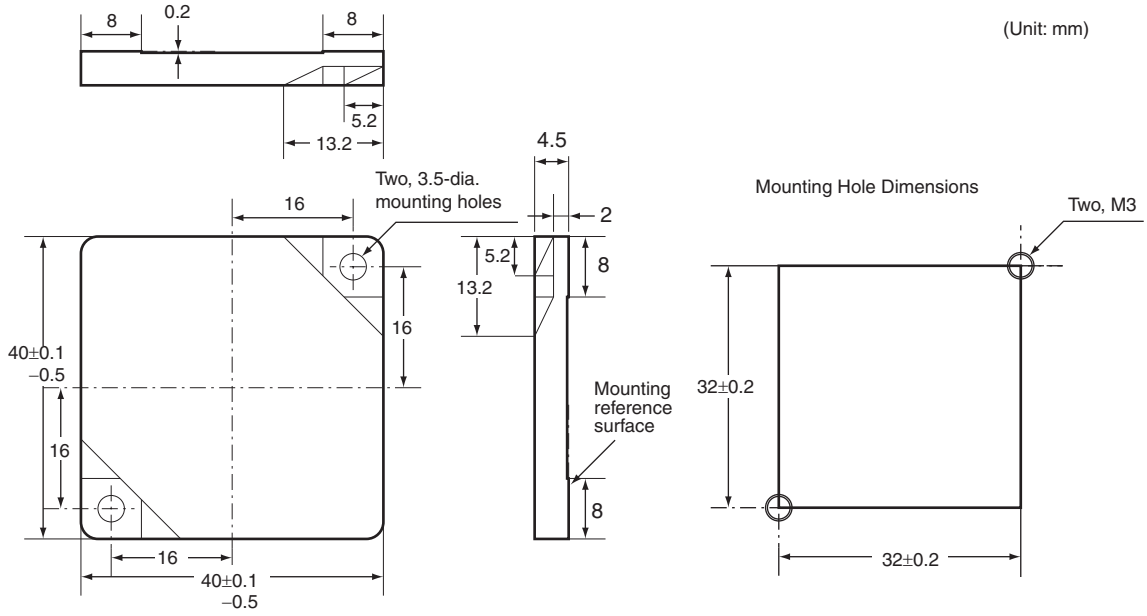

Case material	PBT resin
Filling resin	Epoxy resin

■ V680-D8KF68/-D32KF68

▪ General Specifications

Item / Model	V680-D8KF68	V680-D32KF68
Memory capacity	8,192 bytes (user area)	32,744 bytes (user area)
Memory type	FRAM	
Data Retention	10 years after writing (70°C or less), 6 years after writing (70 to 85°C)	
Write Endurance	10 billion times per block (85°C or less) Access frequency See Note 1: 10 billion times	
Ambient operating temperature	–20 to 85°C (with no icing)	
Ambient storage temperature	–40 to 85°C (with no icing)	
Ambient operating humidity	35% to 85%	
Degree of protection	IP67 (IEC 60529:2001), Oil resistance equivalent to IP67G (JIS C 0920:2003, Appendix 1) See Note 2.	
Vibration resistance	10 to 500 Hz, 1.5-mm double amplitude, acceleration: 100 m/s^2, 10 sweeps each in X, Y, and Z directions for 11 minutes each	
Shock resistance	500 m/s^2, 3 times each in X, Y, and Z directions (Total: 18 times)	
Dimensions	86 × 54 × 10 mm	
Materials	Case: PBT resin Filling resin: Epoxy resin	
Weight	Approx. 50 g	
Metal countermeasures	None	

Note 1. The number of accesses is the total number of reads and writes.
2. Oil resistance has been tested using a specific oil as defined in the OMRON test method.

General Specifications

V680-D8KF68/-D32KF68

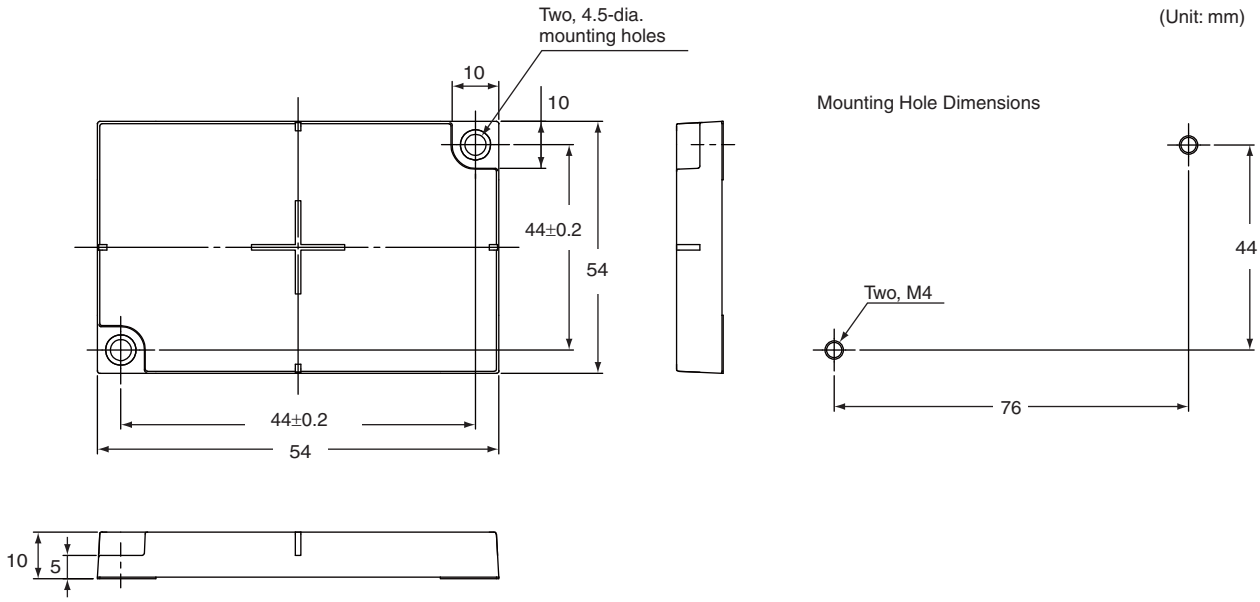

Case material	PBT resin
Filling resin	Epoxy resin

V680-A81 Attachment

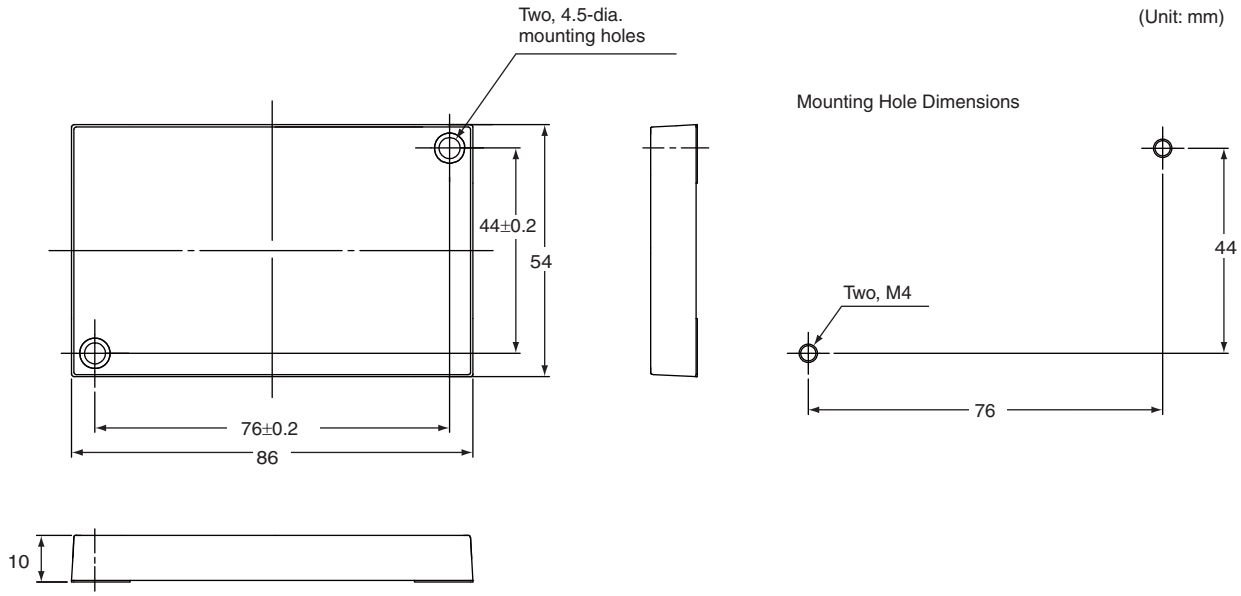

Case material	PBT resin
Filling resin	Epoxy resin

■ V680S-D2KF67/-D2KF67M/-D8KF67/-D8KF67M

▪ General Specifications

Item / Model	V680S-D2KF67	V680S-D2KF67M	V680S-D8KF67	V680S-D8KF67M
Memory capacity	2,000 bytes (user area)		8,192 bytes (user area)	
Memory type	FRAM			
Data Retention	10 years after writing (85°C or less)			
Write Endurance	One trillion times per block (85°C or less). Access frequency[See Note 1.]: One trillion times			
Ambient operating temperature	−20 to 85°C (with no icing)			
Ambient storage temperature	−40 to 125°C (with no icing)			
Ambient operating humidity	35% to 85%			
Degree of protection	IP68 (IEC 60529:2001), Oil resistance equivalent to IP67G (JIS C 0920:2003, Appendix 1) [See Note 2.] IPX9K (DIN 40 050)			
Vibration resistance	10 to 2,000 Hz, 1.5-mm double amplitude, acceleration: 150 m/s^2,10 sweeps each in X, Y, and Z directions for 15 minutes each			
Shock resistance	500 m/s^2, 3 times each in X, Y, and Z directions (Total: 18 times)			
Dimensions	40 × 40 × 5 mm			
Materials	Case: PPS resin			
Weight	Approx. 11.5 g	Approx. 12 g	Approx. 11.5 g	Approx. 12 g
Metal countermeasures	None	Yes	None	Yes

Note 1. The number of accesses is the total number of reads and writes.
2. Oil resistance has been tested using a specific oil as defined in the OMRON test method.

The V680S-D2KF67M/-D8KF67M is designed to be mounted directly to metal. The V680S-D2KF67/-D2KF67M/-D8KF67 and V680S-D8KF67M markings are shown in the following diagrams.

● V680S-D2KF67M/-D8KF67M

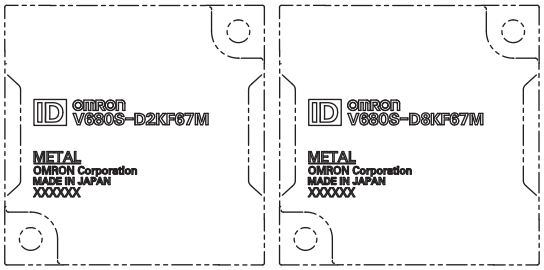

● V680S-D2KF67/-D8KF67

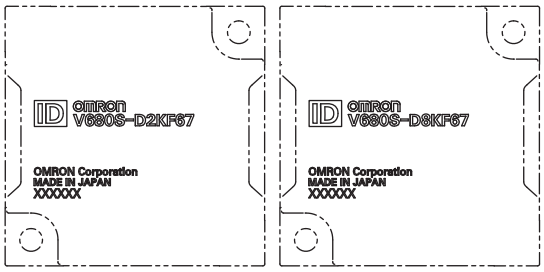

CHECK! The side with the markings is the communications surface. Mount the RF Tag with this side facing the Antenna.

CHECK! When using a V680-D8KF67/-D8KF67M, to use the ID Slave production after October 2014.

▪ Dimensions

(Unit: mm)

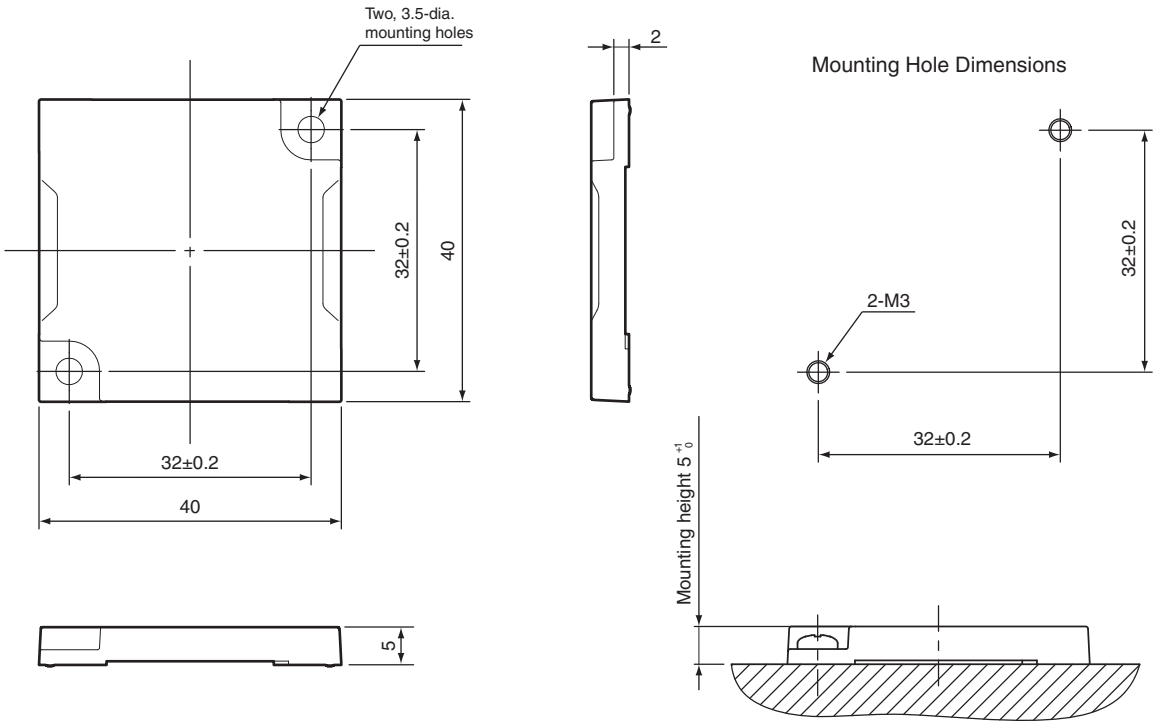

Case material	PPS resin

■ V680S-D2KF68/-D2KF68M

▪ General Specifications

Item / Model	V680S-D2KF68	V680S-D2KF68M	V680S-D8KF68	V680S-D8KF68M
Memory capacity	2,000 bytes (user area)		8,192 bytes (user area)	
Memory type	FRAM			
Data Retention	10 years after writing (85°C or less)			
Write Endurance	One trillion times per block (85°C or less) Access frequency See Note 1.: One trillion times			
Ambient operating temperature	–20 to 85°C (with no icing)			
Ambient storage temperature	–40 to 125°C (with no icing)			
Ambient operating humidity	35% to 85%			
Degree of protection	IP68 (IEC 60529:2001), Oil resistance equivalent to IP67G (JIS C 0920:2003, Appendix 1) See Note 2. IPX9K (DIN 40 050)			
Vibration resistance	10 to 500 Hz, 1.5-mm double amplitude, acceleration: 100 m/s², 10 sweeps each in X, Y, and Z directions for 11 minutes each			
Shock resistance	500 m/s², 3 times each in X, Y, and Z directions (Total: 18 times)			
Dimensions	86 × 54 × 10 mm			
Materials	Case: PPS resin			
Weight	Approx. 44 g	Approx. 46 g	Approx. 44 g	Approx. 46 g
Metal countermeasures	None	Yes	None	Yes

Note 1. The number of accesses is the total number of reads and writes.
2. Oil resistance has been tested using a specific oil as defined in the OMRON test method.

The V680S-D2KF68M/-D8KF68M is designed to be mounted directly to metal. The V680S-D2KF68/-D2KF68M/-D8KF68 and V680S-D8KF68M markings are shown in the following diagrams.

● V680S-D2KF68M/-D8KF68M

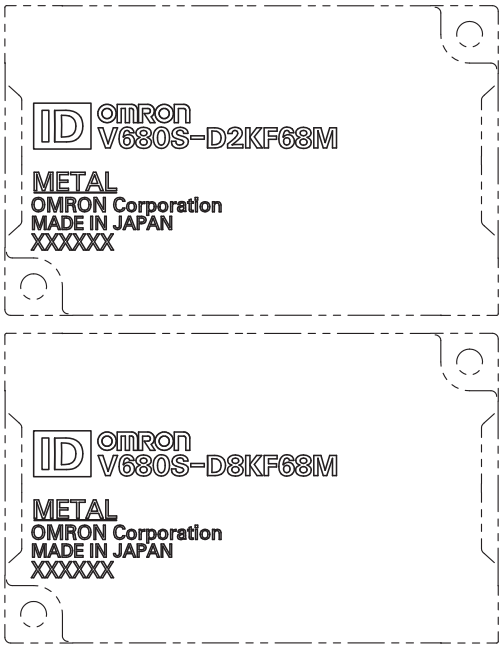

● V680S-D2KF68/-D8KF68

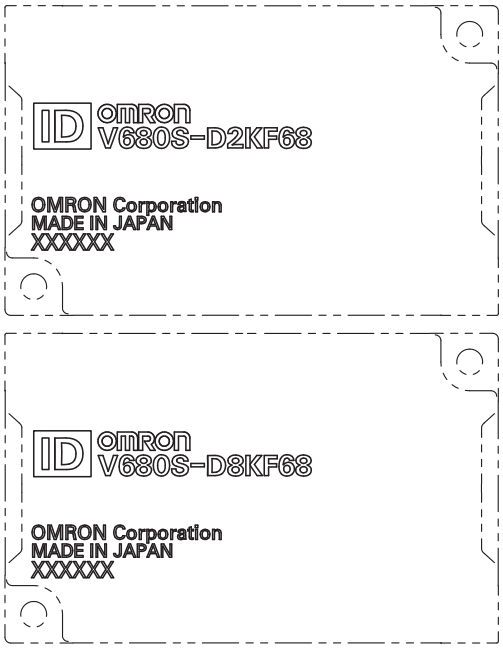

CHECK! The side with the markings is the communications surface. Mount the RF Tag with this side facing the Antenna.

CHECK! When using a V680-D8KF68/-D8KF68M, to use the ID Slave production after October 2014.

▪ Dimensions

V680S-D2KF68/-D2KF68M

(Unit: mm)

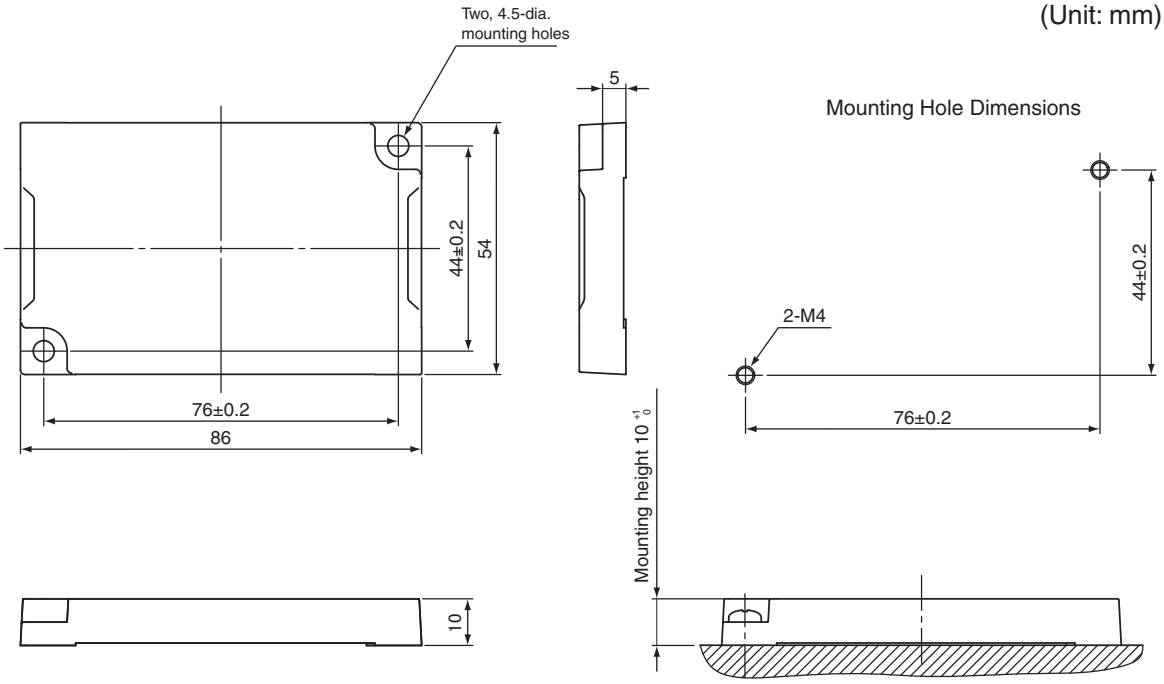

Case material	PPS resin

Characteristics

Communications Range Specifications

■V680-D1KP52MT

Antenna	RF Tag	Communications range	
V680-HS51	V680-D1KP52MT	Read	0.5 to 6.5 mm (Axis offset: ±2)
		Write	0.5 to 6.0 mm (Axis offset: ±2)
	V680-D1KP52MT embedded in metal (steel)	Read	0.5 to 3.5 mm (Axis offset: ±2)
		Write	0.5 to 3.0 mm (Axis offset: ±2)
V680-HS52	V680-D1KP52MT	Read	0.5 to 9.0 mm (Axis offset: ±2)
		Write	0.5 to 8.5 mm (Axis offset: ±2)
	V680-D1KP52MT embedded in metal (steel)	Read	0.5 to 4.5 mm (Axis offset: ±2)
		Write	0.5 to 4.0 mm (Axis offset: ±2)
V680-HS63	V680-D1KP52MT	Read	0.5 to 12.0 mm (Axis offset: ±2)
		Write	0.5 to 9.5 mm (Axis offset: ±2)
V680-HS61	V680-D1KP52MT embedded in metal (steel)	Read	0.5 to 4.0 mm (Axis offset: ±2)
		Write	0.5 to 3.0 mm (Axis offset: ±2)

CHECK!

When embedding the V680-D1KP52MT into a metal surface, use the V680-HS51/-HS52 Antenna. Transmission will not be possible if the V680-HS63 Antenna is used.

■Measurement Conditions

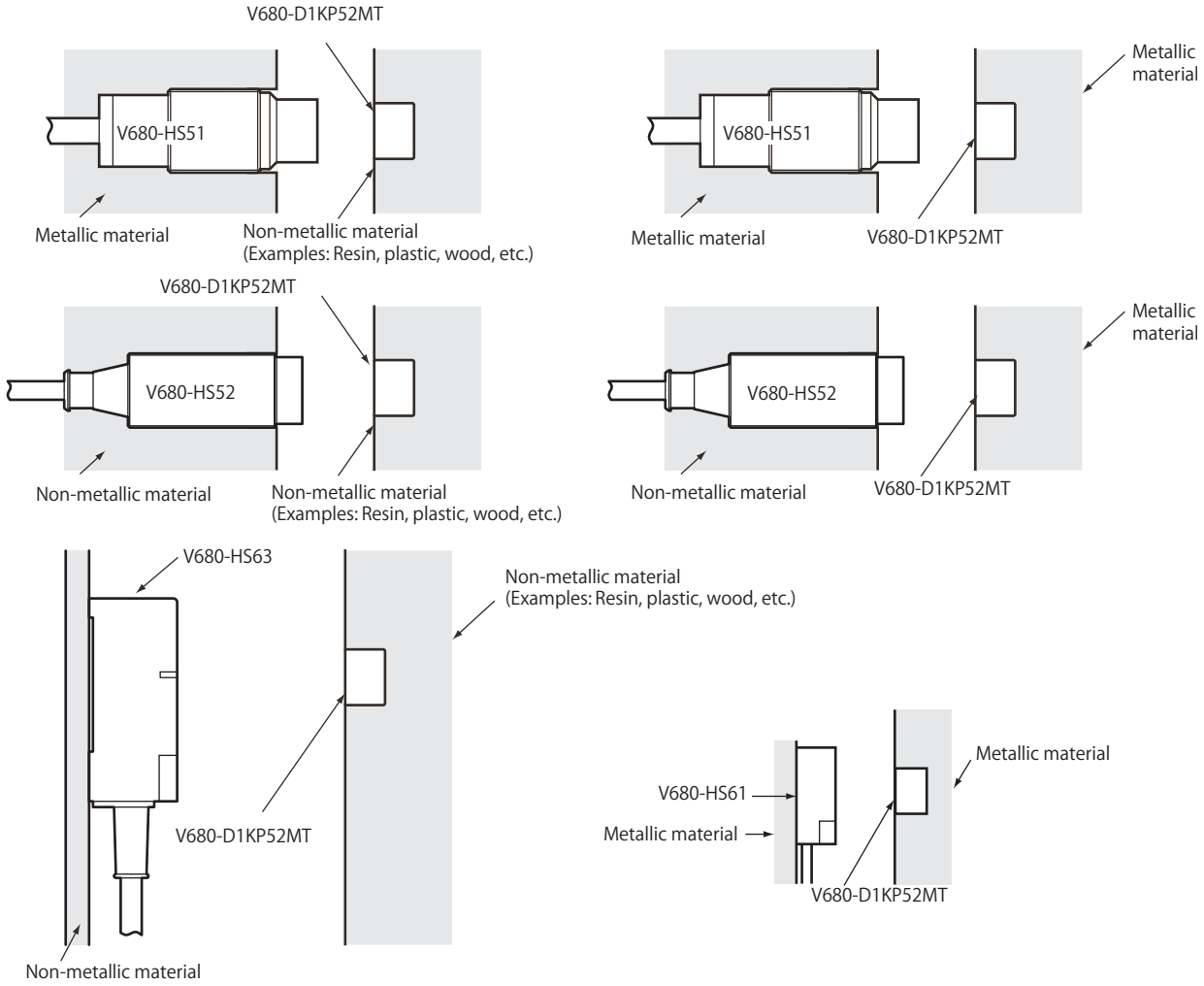

■ V680-D1KP52M-BT01/-D1KP52M-BT11

Antenna	RF Tag	Communications range	
V680-HS51	V680-D1KP52M-BT01/-D1KP52M-BT11	Read	0.5 to 2.5 mm (Axis offset: ±2)
		Write	0.5 to 2.0 mm (Axis offset: ±2)
V680-HS52	V680-D1KP52M-BT01/-D1KP52M-BT11	Read	0.5 to 3.0 mm (Axis offset: ±2)
		Write	0.5 to 2.5 mm (Axis offset: ±2)

▪ Measurement Conditions

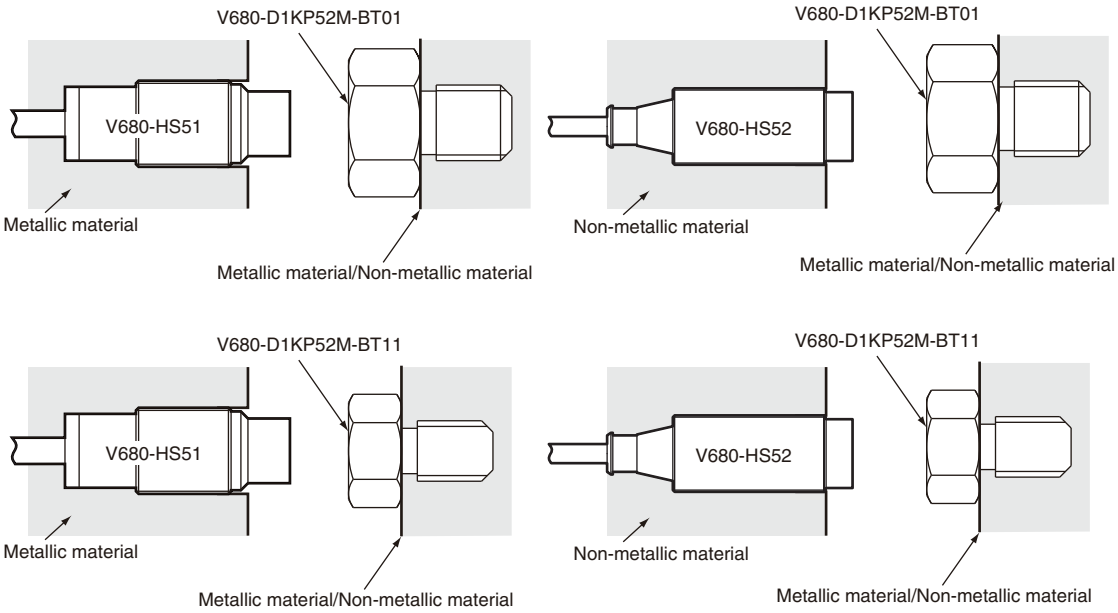

■ V680-D1KP53M

Antenna	RF Tag	Communications range	
V680-HS51	V680-D1KP53M	Read	0.5 to 6.5 mm (Axis offset: ±2)
		Write	0.5 to 6.0 mm (Axis offset: ±2)
	V680-D1KP53M embedded in metal (steel)	Read	0.5 to 3.5 mm (Axis offset: ±2)
		Write	0.5 to 3.0 mm (Axis offset: ±2)
V680-HS52	V680-D1KP53M	Read	0.5 to 9.0 mm (Axis offset: ±2)
		Write	0.5 to 8.5 mm (Axis offset: ±2)
	V680-D1KP53M embedded in metal (steel)	Read	0.5 to 4.5 mm (Axis offset: ±2)
		Write	0.5 to 4.0 mm (Axis offset: ±2)

CHECK!

When embedding the V680-D1KP53M into a metal surface, use the V680-HS51/-HS52 Antenna.
Transmission will not be possible if the V680-HS63 Antenna is used.

▪ Measurement Conditions

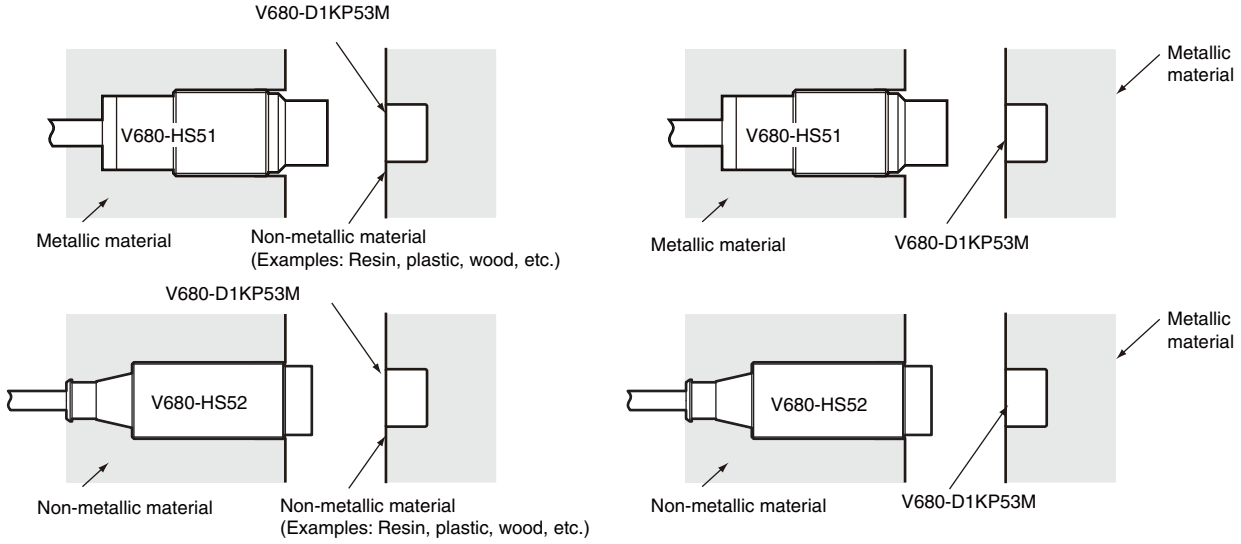

■ V680-D1KP54T

Antenna	RF Tag	Communications distance	
V680-HS52	V680-D1KP54T	Read	0 to 17.0 mm (Axis offset: ±2 mm)
		Write	0 to 15.0 mm (Axis offset: ±2 mm)
V680-HS63	V680-D1KP54T	Read	0 to 24.0 mm (Axis offset: ±10 mm)
		Write	0 to 20.0 mm (Axis offset: ±10 mm)
V680-HS65	V680-D1KP54T	Read	0 to 33.0 mm (Axis offset: ±10 mm)
		Write	0 to 28.0 mm (Axis offset: ±10 mm)

• Measurement Conditions

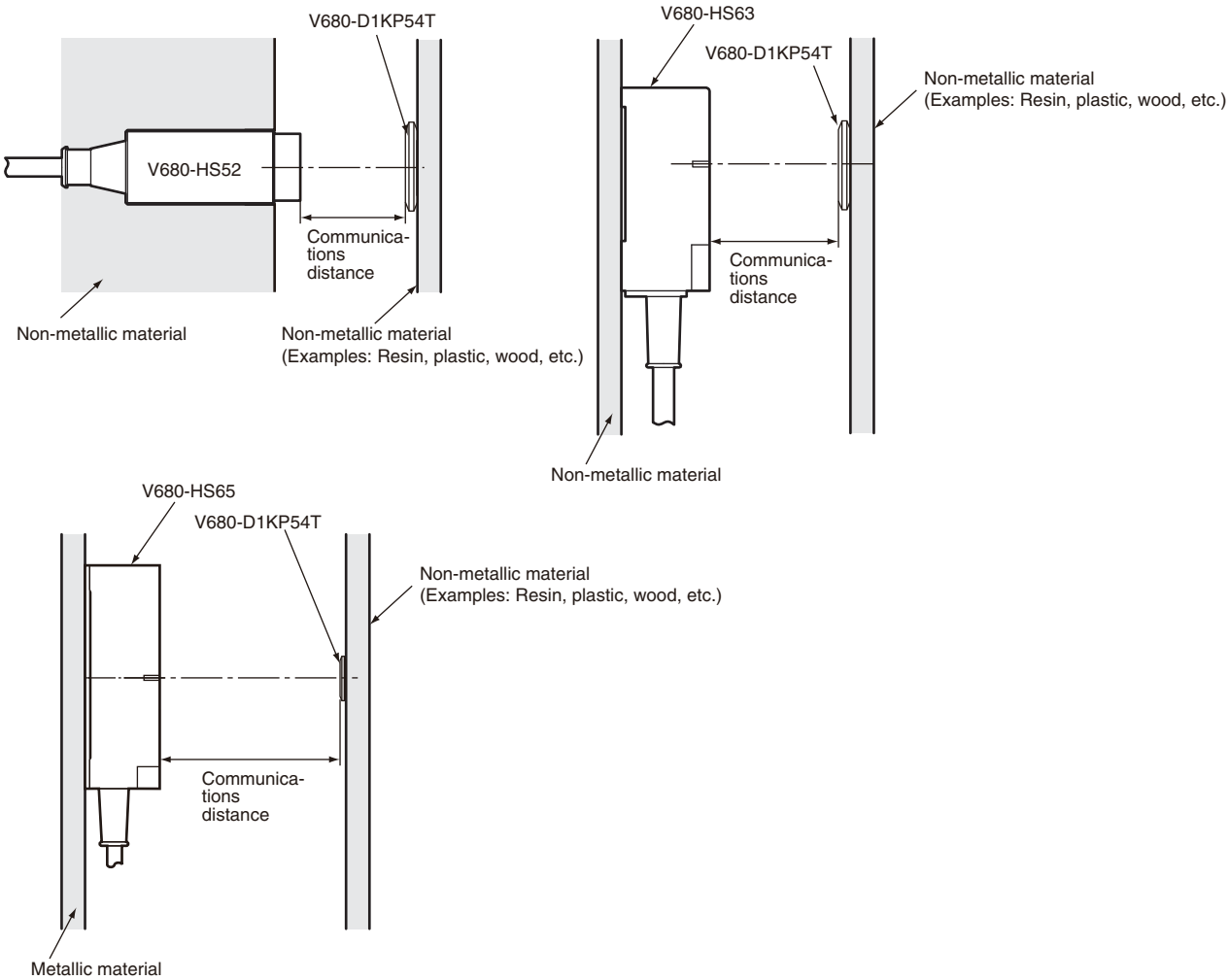

■ V680-D1KP66T

Antenna	RF Tag	Communications range	
V680-HS52	V680-D1KP66T	Read	1.0 to 17.0 mm (Axis offset: ±2)
		Write	1.0 to 17.0 mm (Axis offset: ±2)
V680-HS63	V680-D1KP66T	Read	5.0 to 30.0 mm (Axis offset: ±10)
		Write	5.0 to 25.0 mm (Axis offset: ±10)
V680-HS65	V680-D1KP66T	Read	5.0 to 47.0 mm (Axis offset: ±10)
		Write	5.0 to 42 mm (Axis offset: ±10)

▪ Measurement Conditions

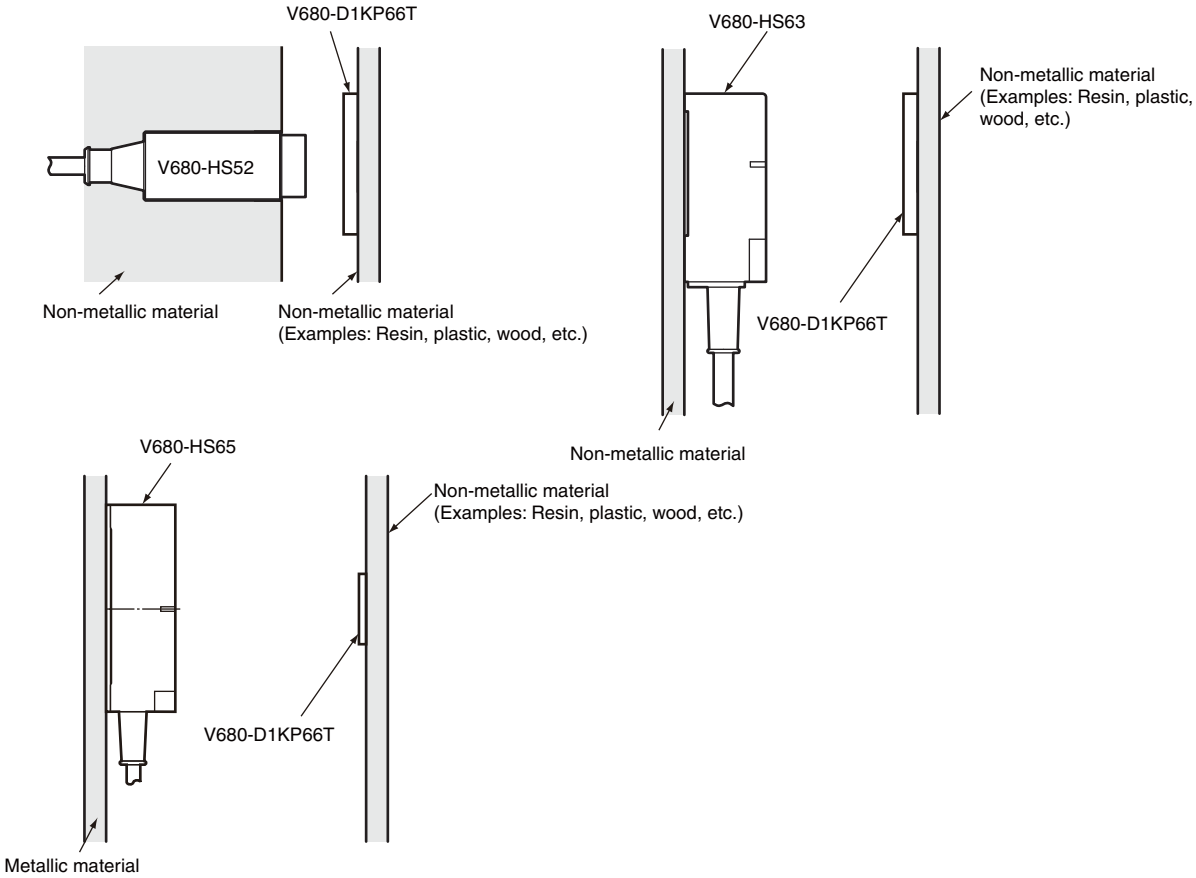

■ V680-D1KP66MT

Antenna	RF Tag	Communications range	
V680-HS52	V680-D1KP66MT embedded in metal (steel)	Read	1.0 to 16.0 mm (Axis offset: ±2)
		Write	1.0 to 14.0 mm (Axis offset: ±2)
V680-HS63	V680-D1KP66MT embedded in metal (steel)	Read	5.0 to 25.0 mm (Axis offset: ±10)
		Write	5.0 to 20.0 mm Axis offset: ±10)
V680-HS65	V680-D1KP66MT embedded in metal (steel)	Read	5.0 to 25.0 mm (Axis offset: ±10)
		Write	5.0 to 20.0 mm (Axis offset: ±10)

▪ Measurement Conditions

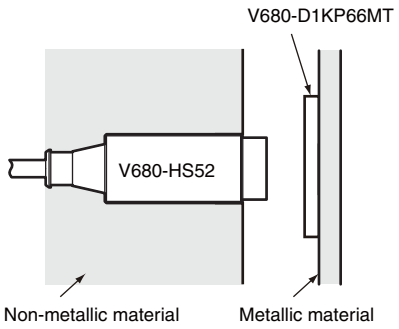

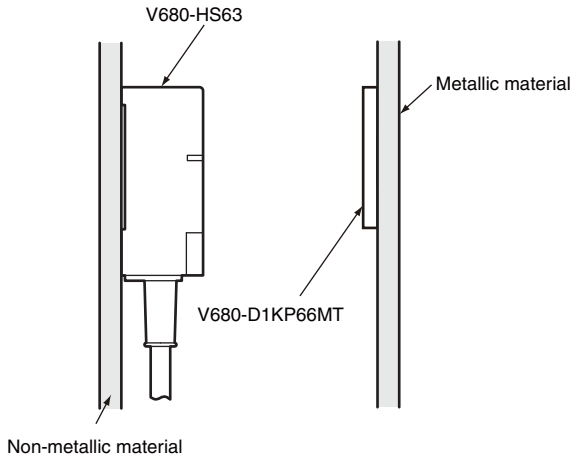

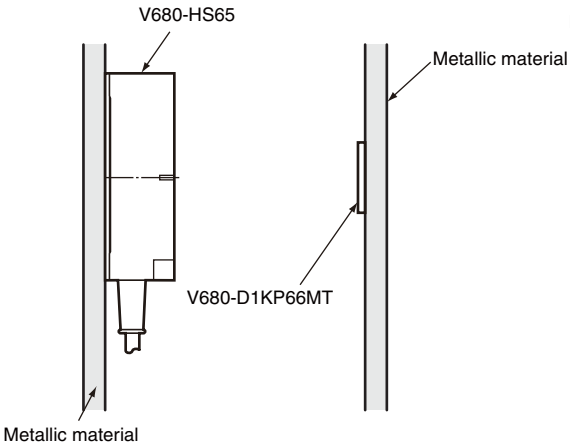

■ V680-D1KP66-SP

Antenna	RF Tag	Communications range	
V680-HS52	V680-D1KP66T-SP	Read	1.0 to 15.0 mm (Axis offset: ±2)
		Write	1.0 to 15.0 mm (Axis offset: ±2)
V680-HS63	V680-D1KP66T-SP	Read	1.0 to 25.0 mm (Axis offset: ±10)
		Write	1.0 to 20.0 mm (Axis offset: ±10)
V680-HS65	V680-D1KP66T-SP	Read	1.0 to 42.0 mm (Axis offset: ±10)
		Write	1.0 to 37.0 mm (Axis offset: ±10)

▪ Measurement Conditions

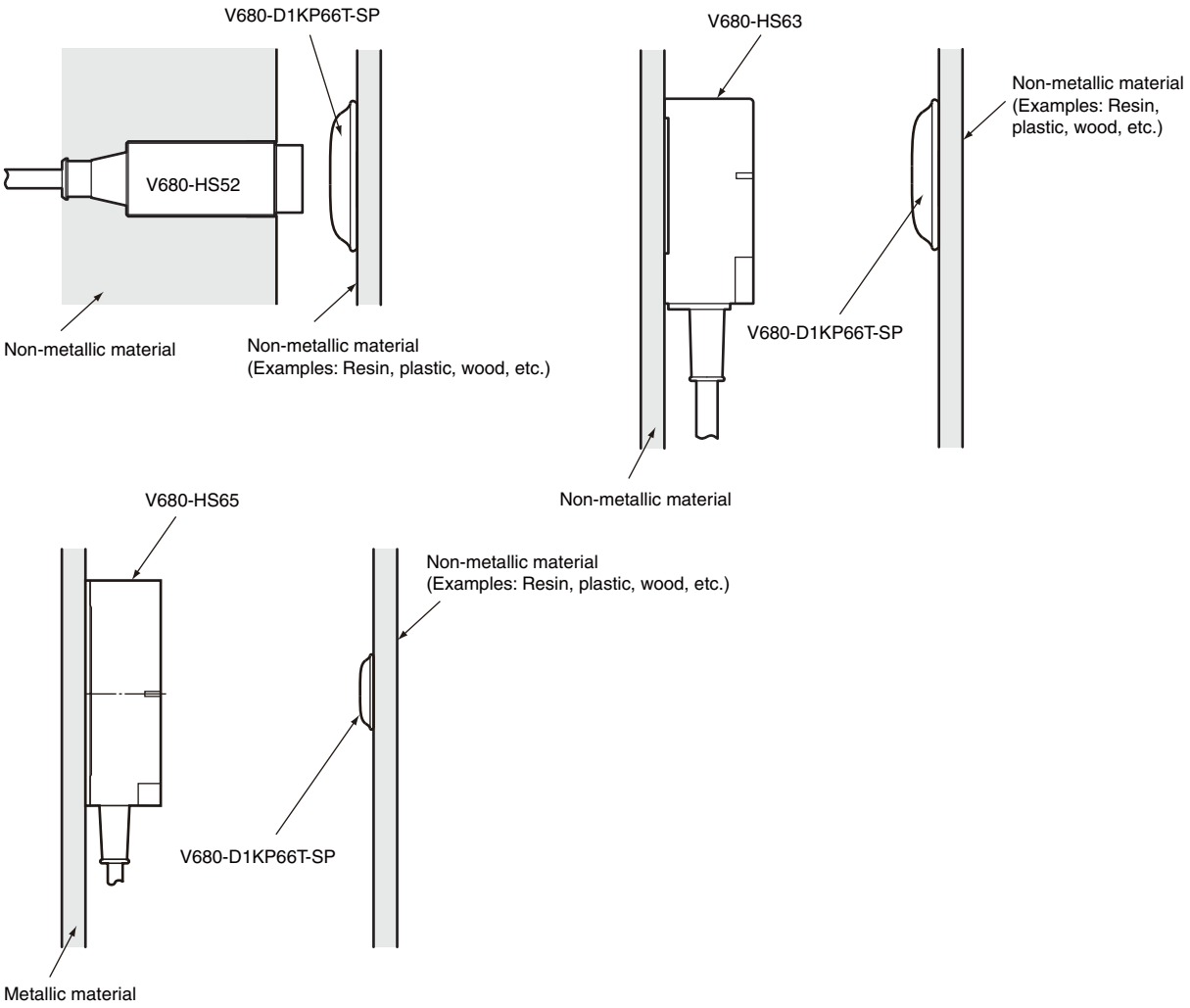

■ V680-D1KP58HTN

Antenna	RF Tag	Communications range	
V680-HS65	V680-D1KP58HTN	Read	0.0 to 55.0 mm (Axis offset: ±10)
		Write	0.0 to 50.0 mm (Axis offset: ±10)

▪ Measurement Conditions

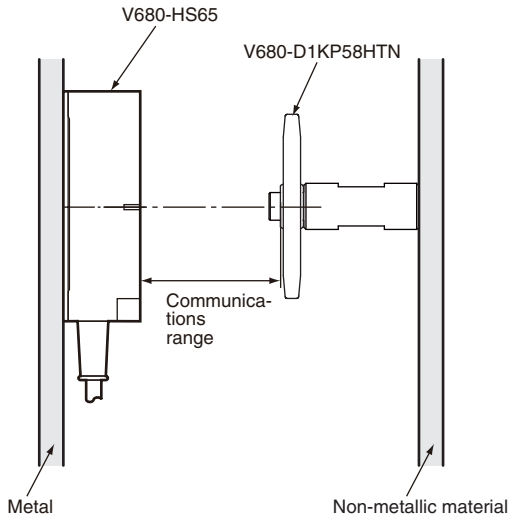

■ V680-D2KF52M

Antenna	RF Tag	Communications range	
V680-HS51	V680-D2KF52M	Read	0.5 to 5.5 mm (Axis offset: ±2)
		Write	0.5 to 5.5 mm (Axis offset: ±2)
	V680-D2KF52M embedded in metal (steel)	Read	0.5 to 3.5 mm (Axis offset: ±2)
		Write	0.5 to 3.5 mm (Axis offset: ±2)
V680-HS52	V680-D2KF52M	Read	0.5 to 8.0 mm (Axis offset: ±2)
		Write	0.5 to 8.0 mm (Axis offset: ±2)
	V680-D2KF52M embedded in metal (steel)	Read	0.5 to 3.0 mm (Axis offset: ±2)
		Write	0.5 to 3.0 mm (Axis offset: ±2)
V680-HS63	V680-D2KF52M	Read	0.5 to 9.5 mm (Axis offset: ±2)
		Write	0.5 to 9.5 mm (Axis offset: ±2)

CHECK!

When embedding the V680-D2KP52M into a metal surface, use the V680-HS51/-HS52 Antenna. Transmission will not be possible if the V680-HS63 Antenna is used.

▪ Measurement Conditions

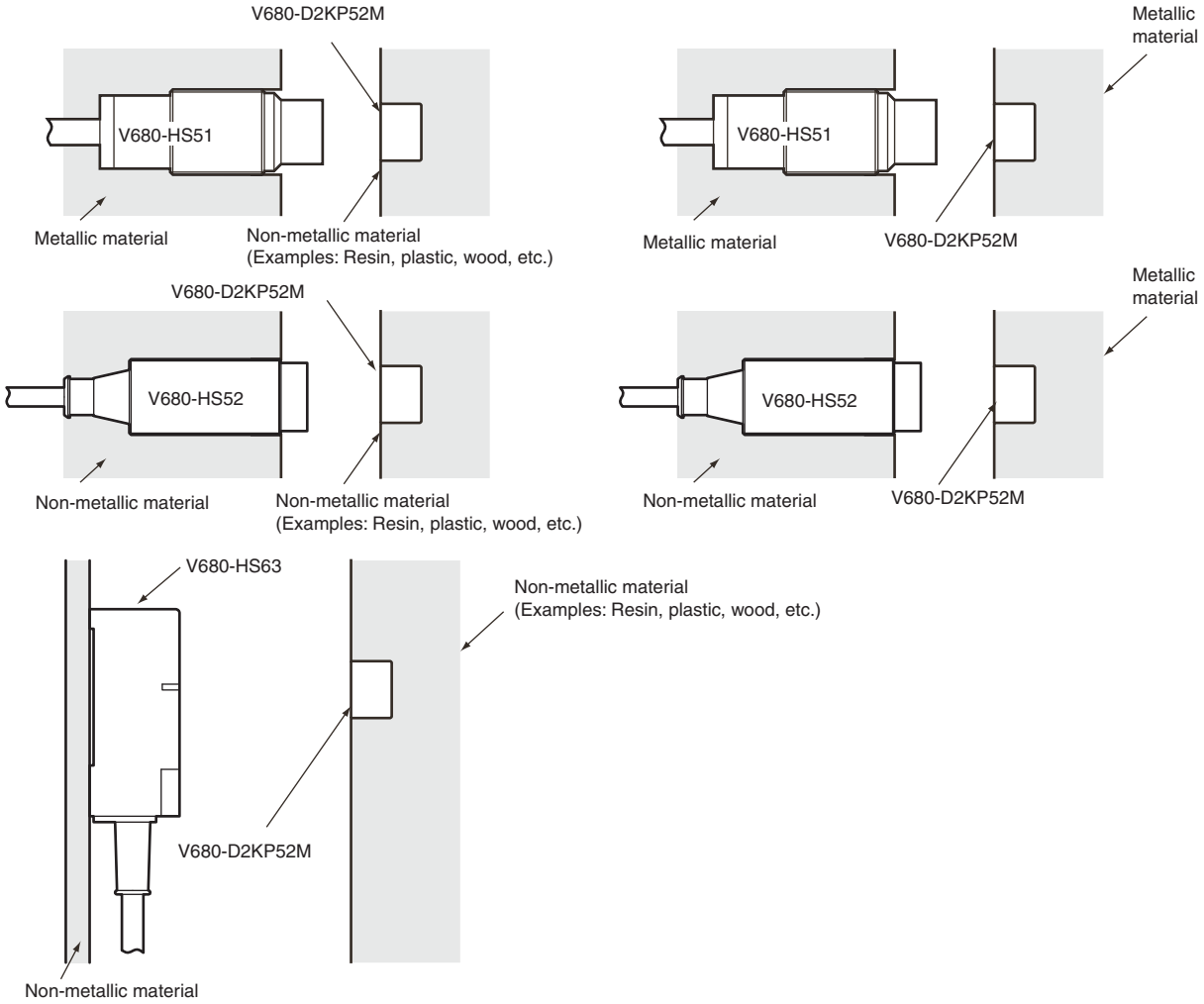

■ V680-D2KF52M-BT01/-D2KF52M-BT11

Antenna	RF Tag	Communications range	
V680-HS51	V680-D2KF52M-BT01/-D2KF52M-BT11	Read	0.5 to 2.5 mm (Axis offset: ±2)
		Write	0.5 to 2.5 mm (Axis offset: ±2)
V680-HS52	V680-D2KF52M-BT01/-D2KF52M-BT11	Read	0.5 to 2.0 mm (Axis offset: ±2)
		Write	0.5 to 2.5 mm (Axis offset: ±2)

▪ Measurement Conditions

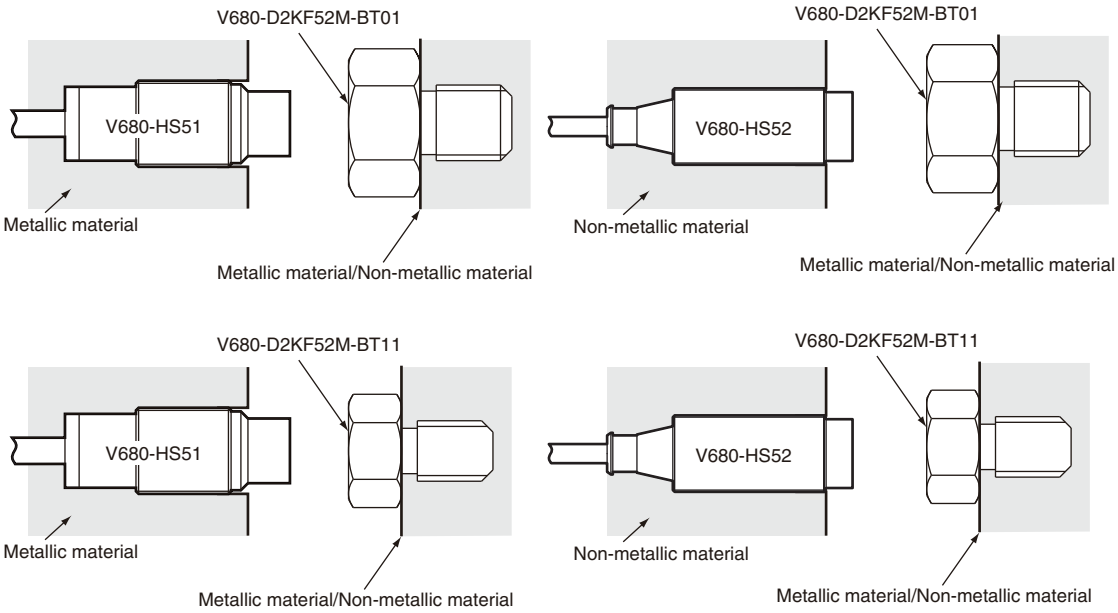

■ V680-D8KF67

Antenna	RF Tag	Communications range	
V680-HS52	V680-D8KF67	Read	0 to 17.0 mm (Axis offset: ±2)
		Write	0 to 17.0 mm (Axis offset: ±2)
V680-HS63	V680-D8KF67	Read	0 to 30.0 mm (Axis offset: ±10)
		Write	0 to 30.0 mm (Axis offset: ±10)
V680-HS65	V680-D8KF67	Read	0 to 42.0 mm (Axis offset: ±10)
		Write	0 to 42.0 mm (Axis offset: ±10)

▪ Measurement Conditions

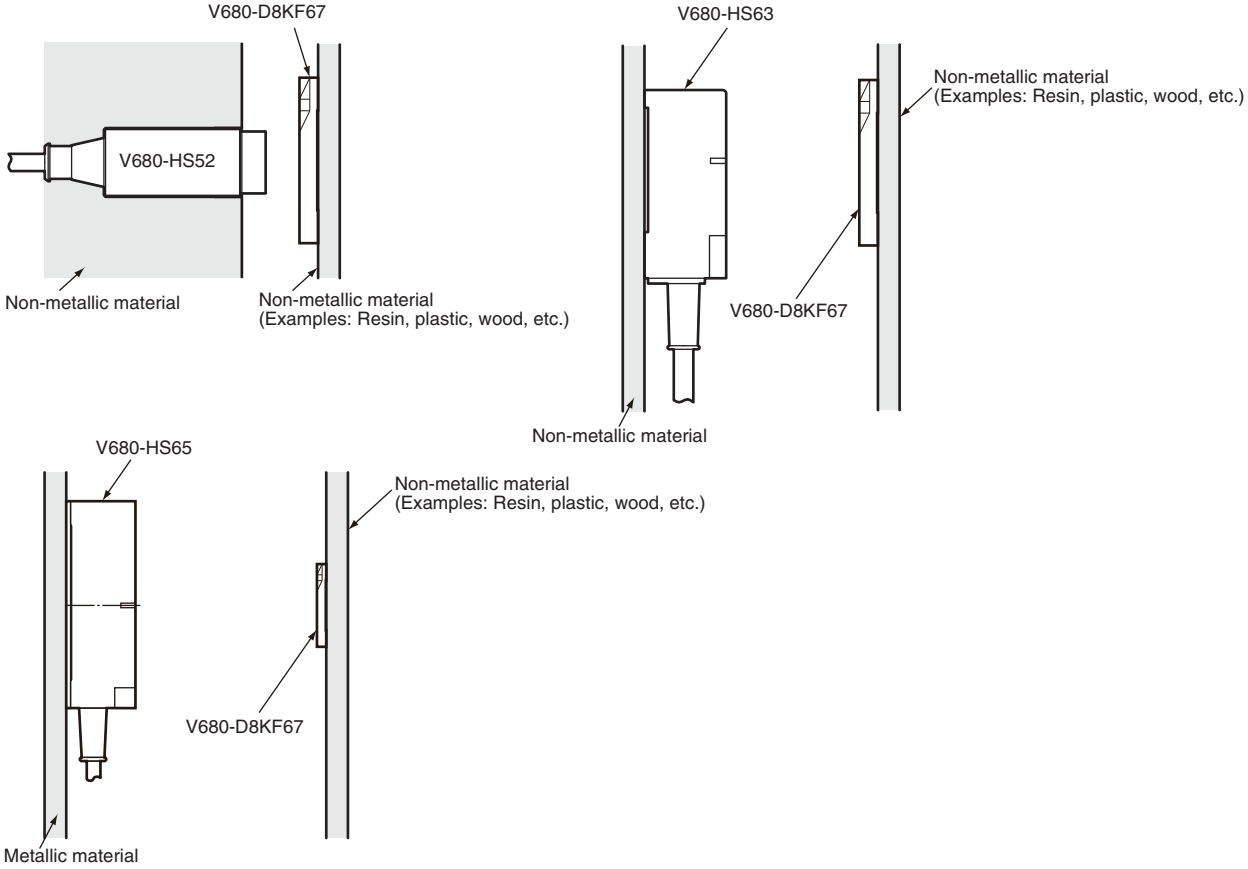

■ V680-D8KF67M

Antenna	RF Tag	Communications range	
V680-HS52	V680-D8KF67M with metal on back (steel)	Read	0 to 16.0 mm (Axis offset: ±2)
		Write	0 to 16.0 mm (Axis offset: ±2)
V680-HS63	V680-D8KF67M with metal on back (steel)	Read	0 to 25.0 mm (Axis offset: ±10)
		Write	0 to 25.0 mm (Axis offset: ±10)
V680-HS65	V680-D8KF67M with metal on back (steel)	Read	0 to 25.0 mm (Axis offset: ±10)
		Write	0 to 25.0 mm (Axis offset: ±10)

▪ Measurement Conditions

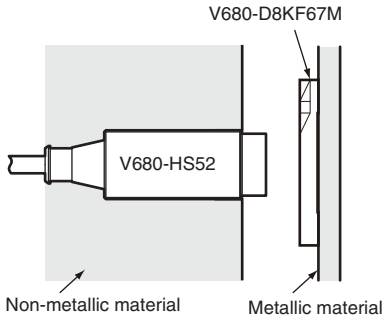

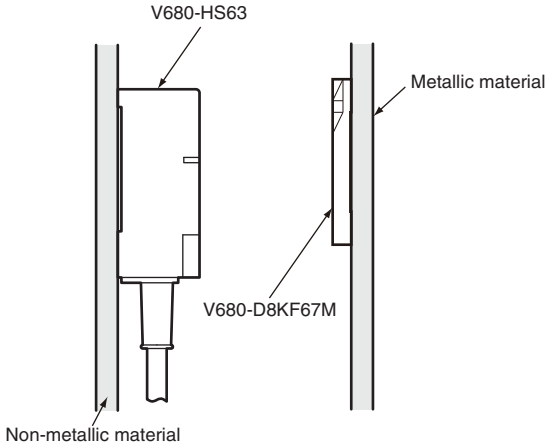

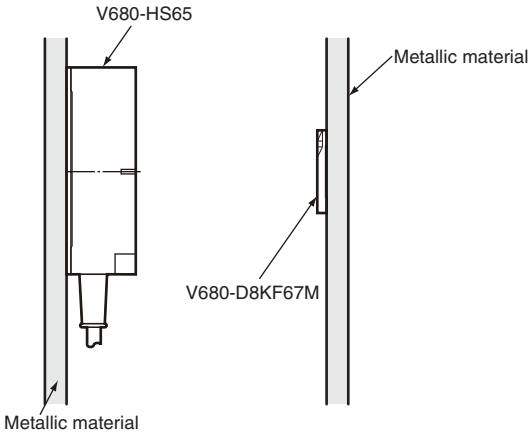

■ V680-D8KF68/-D32KF68

Antenna	RF Tag	Communications range	
V680-HS63	V680-D8KF68	Read	5.0 to 45.0 mm (Axis offset: ±10)
		Write	5.0 to 45.0 mm (Axis offset: ±10)
	V680-D8KF68 (with V680-A81 Attachment, V680-A81) with metal on back (steel)	Read	5.0 to 35.0 mm (Axis offset: ±10)
		Write	5.0 to 35.0 mm (Axis offset: ±10)
	V680-D32KF68	Read	5.0 to 45.0 mm (Axis offset: ±10)
		Write	5.0 to 45.0 mm (Axis offset: ±10)
	V680-D32KF68 (with Attachment, V680-A81) with metal on back (steel)	Read	5.0 to 35.0 mm (Axis offset: ±10)
		Write	5.0 to 35.0 mm (Axis offset: ±10)
V680-HS65	V680-D8KF68	Read	5.0 to 75.0 mm (Axis offset: ±10)
		Write	5.0 to 75.0 mm (Axis offset: ±10)
	V680-D8KF68 (with Attachment, V680-A81) with metal on back (steel)	Read	5.0 to 55.0 mm (Axis offset: ±10)
		Write	5.0 to 55.0 mm (Axis offset: ±10)
	V680-D32KF68	Read	5.0 to 75.0 mm (Axis offset: ±10)
		Write	5.0 to 75.0 mm (Axis offset: ±10)
	V680-D32KF68 (with Attachment, V680-A81) with metal on back (steel)	Read	5.0 to 55.0 mm (Axis offset: ±10)
		Write	5.0 to 55.0 mm (Axis offset: ±10)

▪ Measurement Conditions

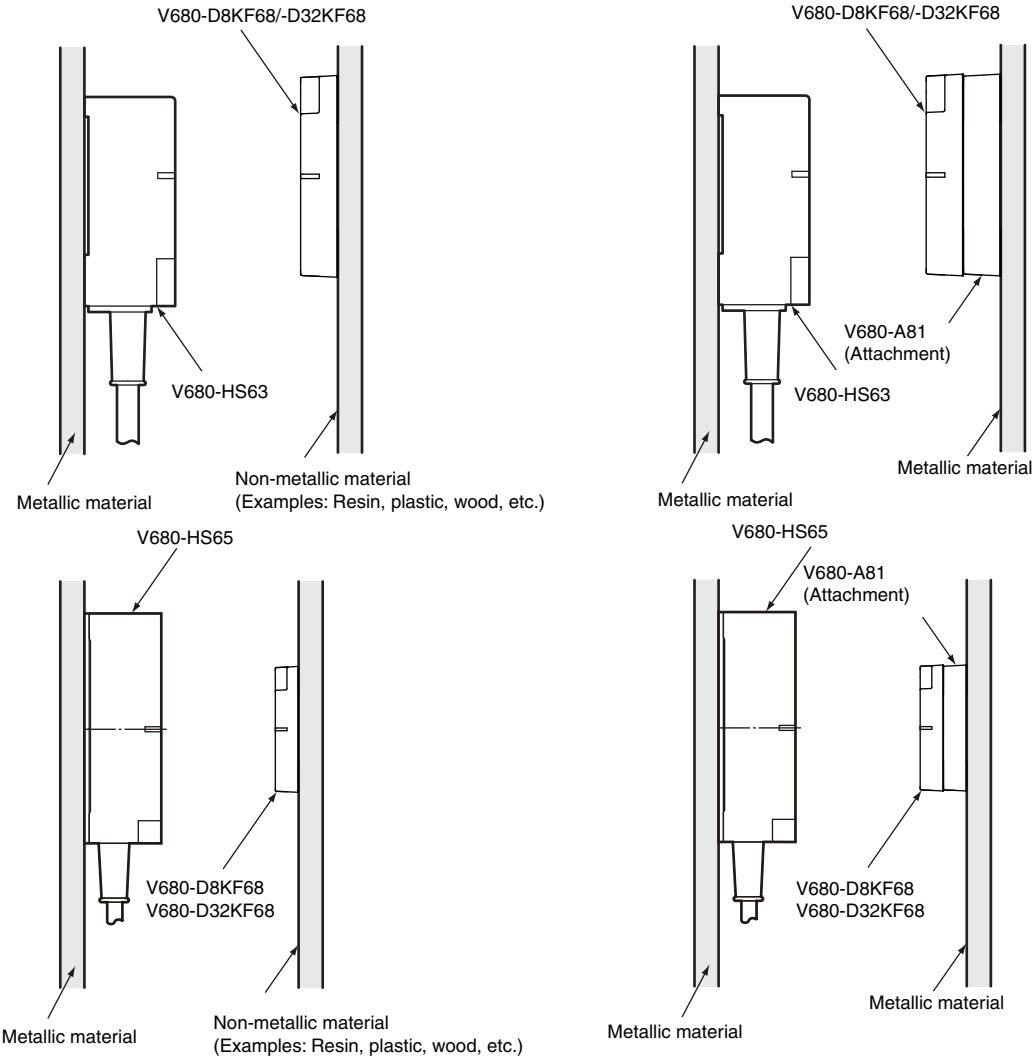

■ V680S-D2KF67

Antenna	RF Tag	Communications range	
V680-HS52	V680S-D2KF67	Read	1.0 to 17.0 mm (Axis offset: ±2)
		Write	1.0 to 17.0 mm (Axis offset: ±2)
V680-HS63	V680S-D2KF67	Read	7.0 to 30.0 mm (Axis offset: ±10)
		Write	7.0 to 30.0 mm (Axis offset: ±10)
V680-HS65	V680S-D2KF67	Read	5.0 to 42.0 mm (Axis offset: ±10)
		Write	5.0 to 42.0 mm (Axis offset: ±10)

▪ Measurement Conditions

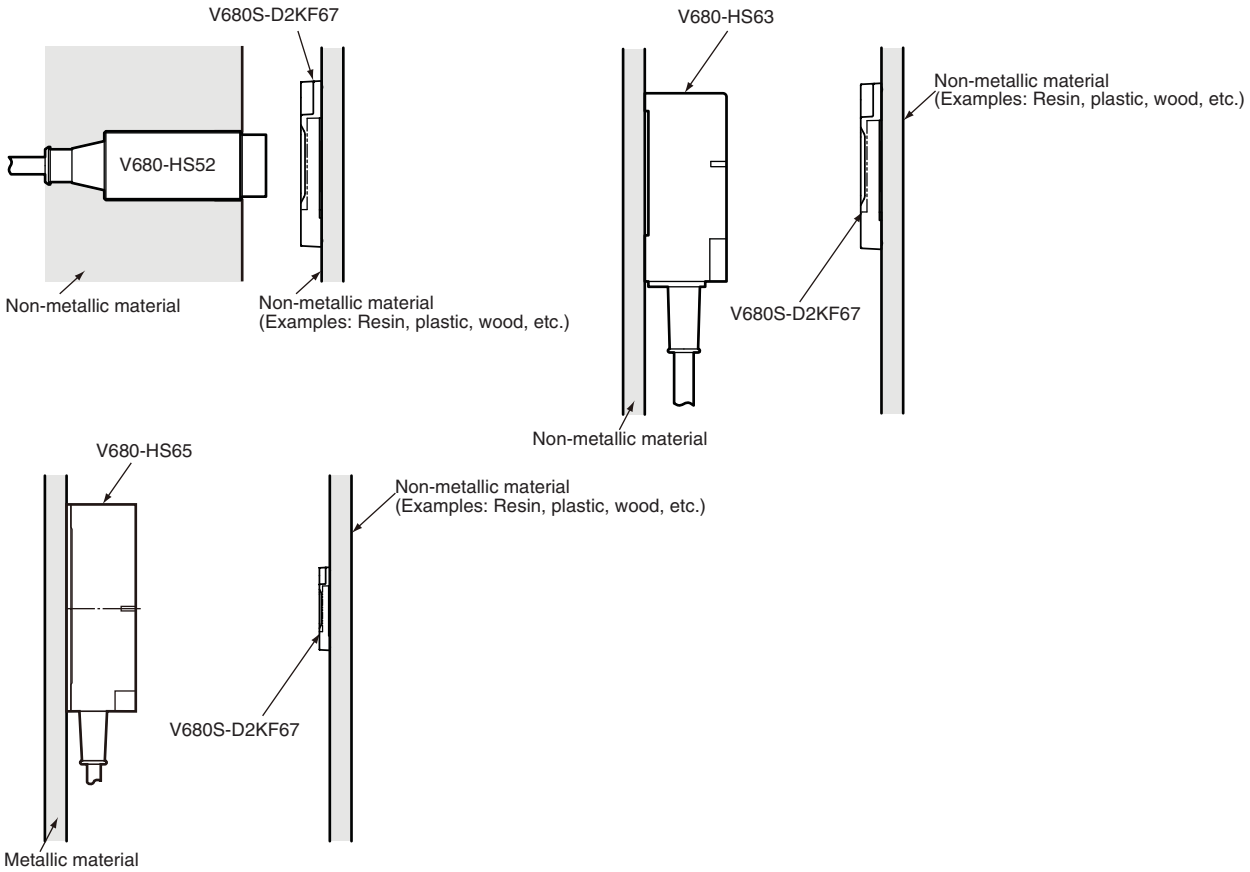

■ V680S-D2KF67M

Antenna	RF Tag	Communications range	
V680-HS52	V680S-D2KF67M with metal on back (steel)	Read	1.0 to 16.0 mm (Axis offset: ±2)
		Write	1.0 to 16.0 mm (Axis offset: ±2)
V680-HS63	V680S-D2KF67M with metal on back (steel)	Read	6.0 to 25.0 mm (Axis offset: ±10)
		Write	6.0 to 25.0 mm (Axis offset: ±10)
V680-HS65	V680S-D2KF67M with metal on back (steel)	Read	5.0 to 25.0 mm (Axis offset: ±10)
		Write	5.0 to 25.0 mm (Axis offset: ±10)

▪ Measurement Conditions

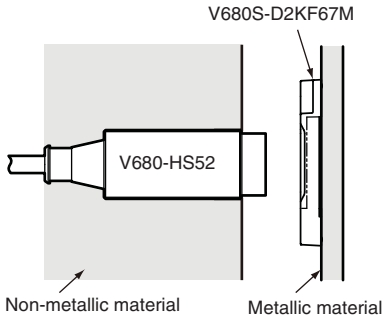

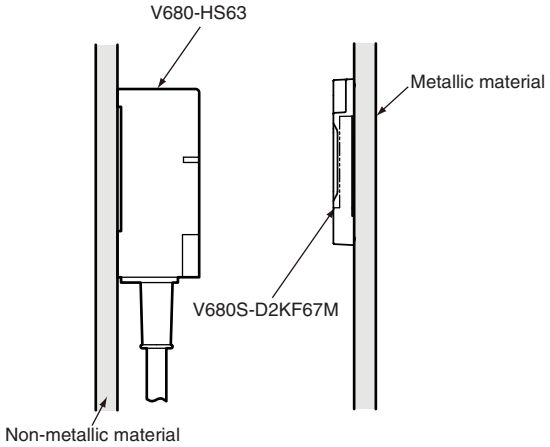

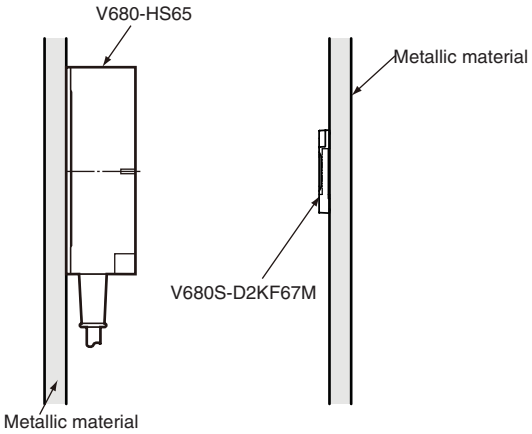

■ V680S-D2KF68

Antenna	RF Tag	Communications range	
V680-HS63	V680S-D2KF68	Read	5.0 to 45.0 mm (Axis offset: ±10)
		Write	5.0 to 45.0 mm (Axis offset: ±10)
V680-HS65	V680S-D2KF68	Read	5.0 to 75.0 mm (Axis offset: ±10)
		Write	5.0 to 75.0 mm (Axis offset: ±10)

▪ Measurement Conditions

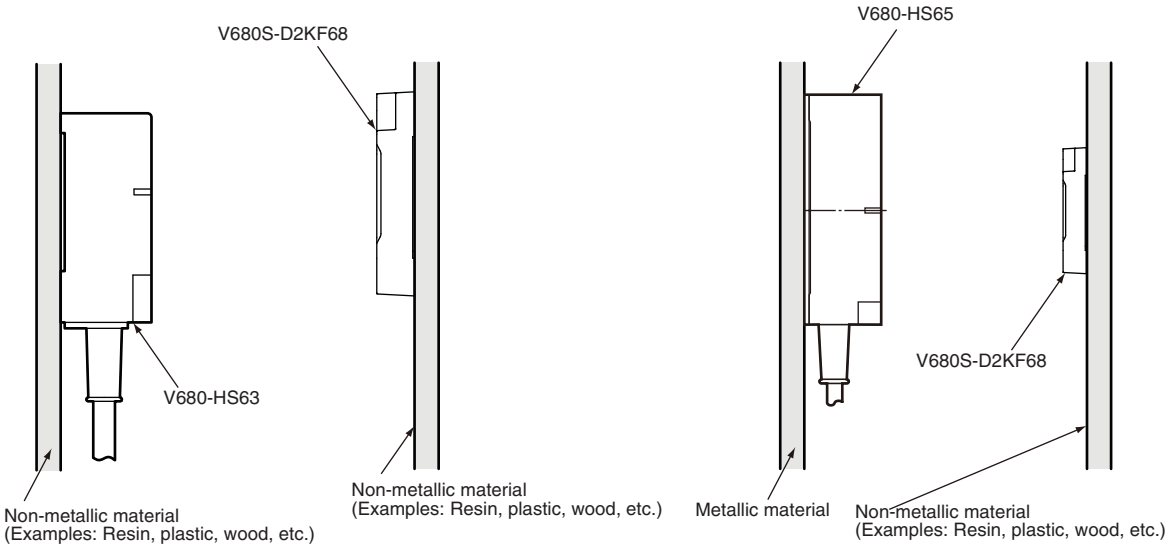

■ V680S-D2KF68M

Antenna	RF Tag	Communications range	
V680-HS63	V680S-D2KF68M	Read	5.0 to 35.0 mm (Axis offset: ±10)
		Write	5.0 to 35.0 mm (Axis offset: ±10)
V680-HS65	V680S-D2KF68M	Read	5.0 to 55.0 mm (Axis offset: ±10)
		Write	5.0 to 55.0 mm (Axis offset: ±10)

▪ Measurement Conditions

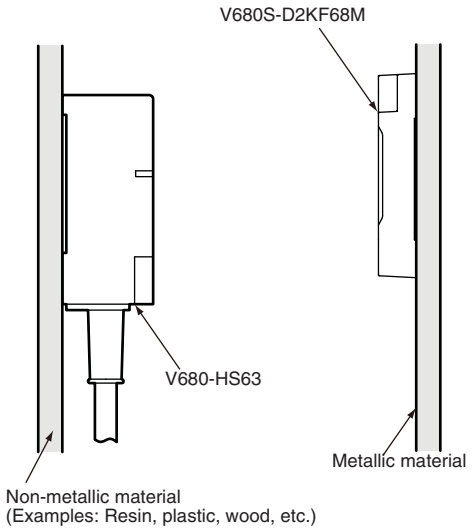

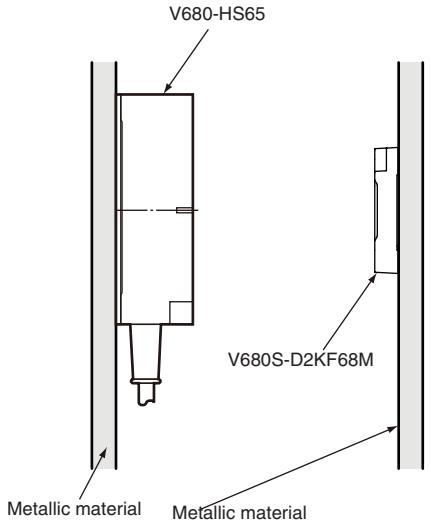

■ V680S-D8KF67

Antenna	RF Tag	Communications range	
V680-HS52	V680S-D8KF67	Read	1.0 to 17.0 mm (Axis offset: ±2)
		Write	1.0 to 17.0 mm (Axis offset: ±2)
V680-HS63	V680S-D8KF67	Read	7.0 to 30.0 mm (Axis offset: ±10)
		Write	7.0 to 30.0 mm (Axis offset: ±10)
V680-HS65	V680S-D8KF67	Read	5.0 to 42.0 mm (Axis offset: ±10)
		Write	5.0 to 42.0 mm (Axis offset: ±10)

▪ Measurement Conditions

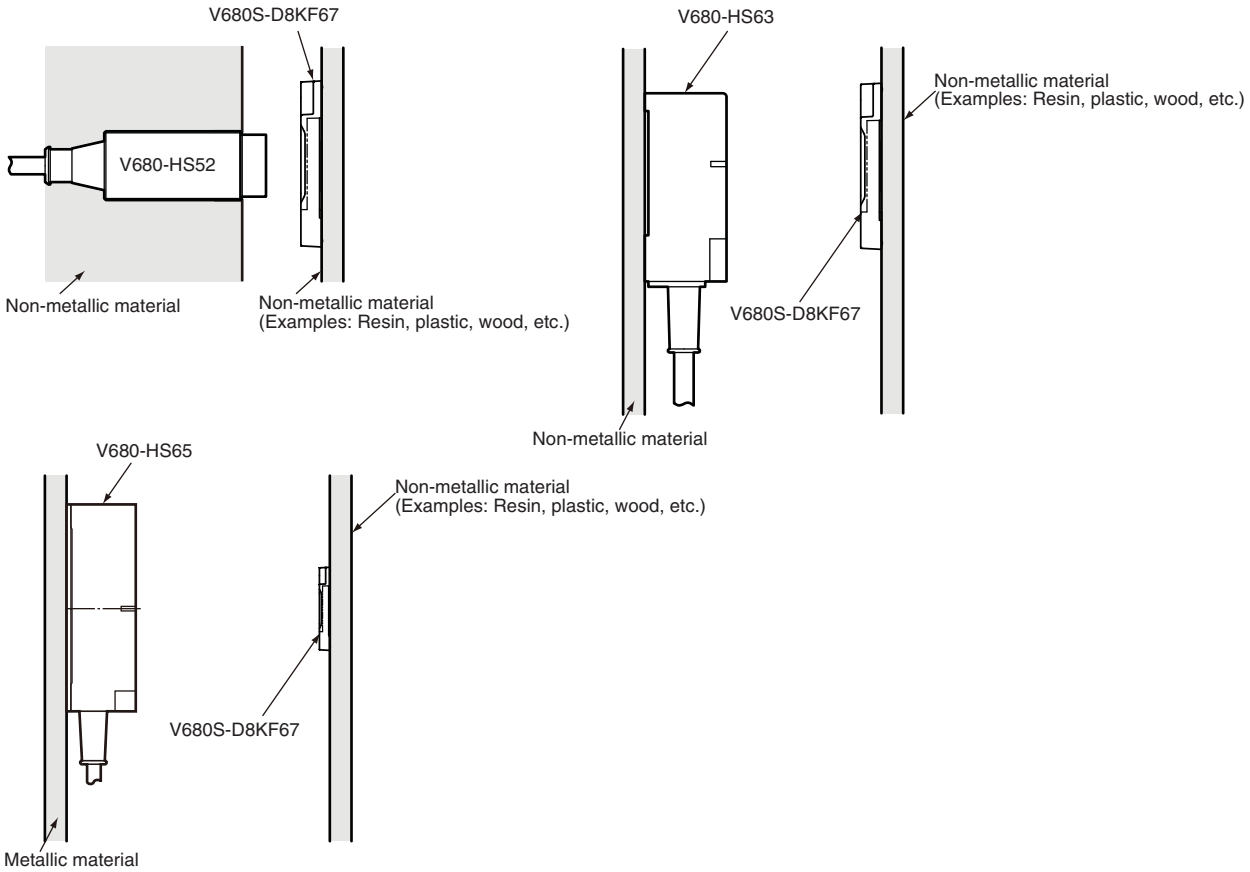

■ V680S-D8KF67M

Antenna	RF Tag	Communications range	
V680-HS52	V680S-D8KF67M with metal on back (steel)	Read	1.0 to 16.0 mm (Axis offset: ±2)
		Write	1.0 to 16.0 mm (Axis offset: ±2)
V680-HS63	V680S-D8KF67M with metal on back (steel)	Read	6.0 to 25.0 mm (Axis offset: ±10)
		Write	6.0 to 25.0 mm (Axis offset: ±10)
V680-HS65	V680S-D8KF67M with metal on back (steel)	Read	5.0 to 25.0 mm (Axis offset: ±10)
		Write	5.0 to 25.0 mm (Axis offset: ±10)

▪ Measurement Conditions

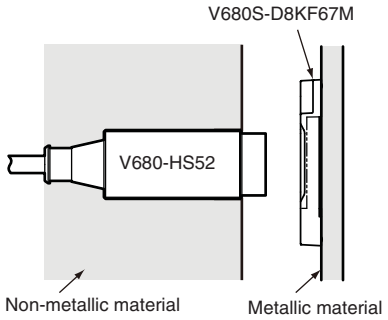

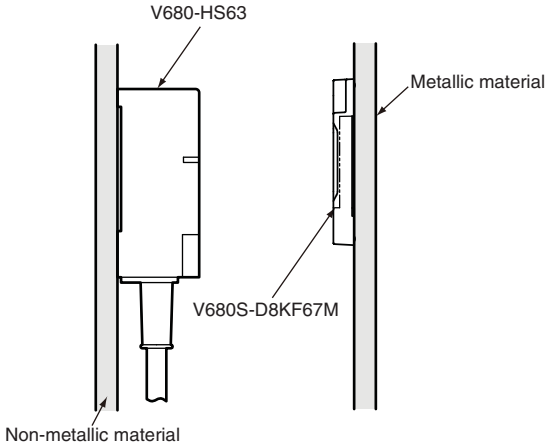

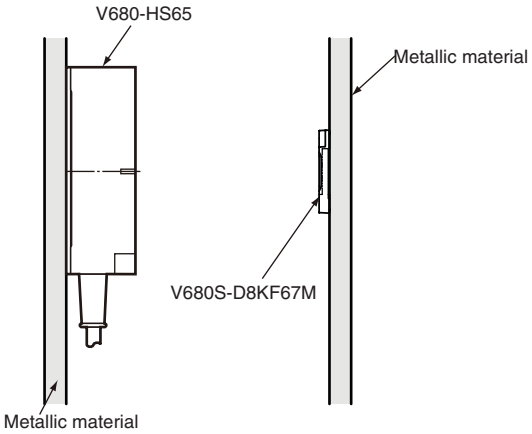

■ V680S-D8KF68

Antenna	RF Tag	Communications range	
V680-HS63	V680S-D8KF68	Read	5.0 to 45.0 mm (Axis offset: ±10)
		Write	5.0 to 45.0 mm (Axis offset: ±10)
V680-HS65	V680S-D8KF68	Read	5.0 to 75.0 mm (Axis offset: ±10)
		Write	5.0 to 75.0 mm (Axis offset: ±10)

▪ Measurement Conditions

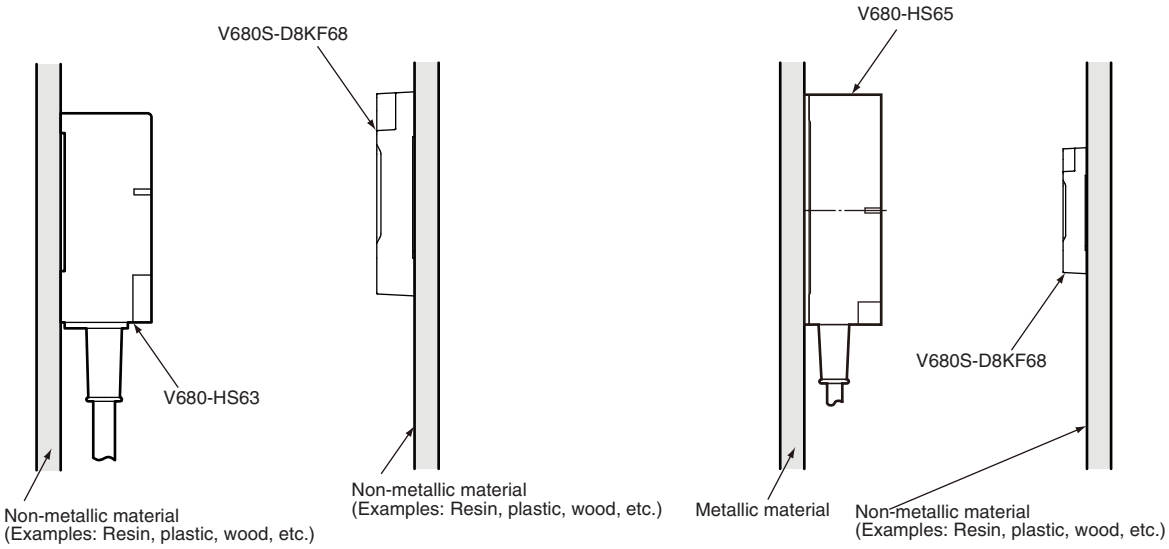

■ V680S-D8KF68M

Antenna	RF Tag	Communications range	
V680-HS63	V680S-D8KF68M	Read	5.0 to 35.0 mm (Axis offset: ±10)
		Write	5.0 to 35.0 mm (Axis offset: ±10)
V680-HS65	V680S-D8KF68M	Read	5.0 to 55.0 mm (Axis offset: ±10)
		Write	5.0 to 55.0 mm (Axis offset: ±10)

▪ Measurement Conditions

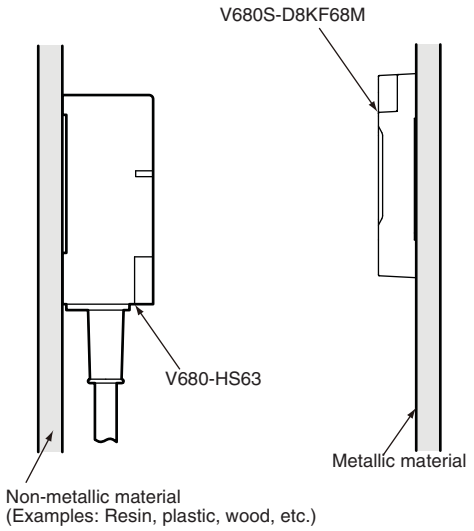

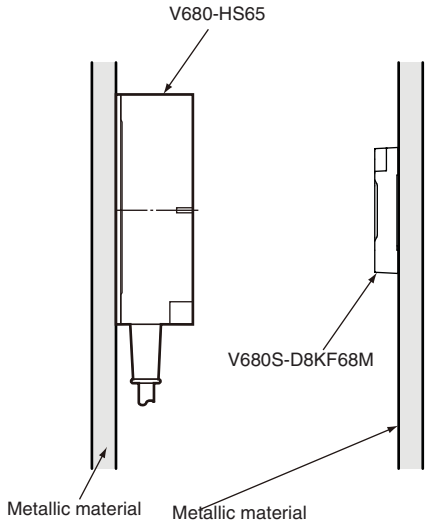

Interrogation Zone

■ V680-D1KP52MT

CHECK!

The interrogation zone given here are for reference only. For information on communications ranges, refer to *Communications Range Specifications* in this section. The interrogation zone depends on the type of RF Tags used, the ambient temperature, surrounding metals, and noise. Be sure to check carefully when installing the system.

p.122

● V680-HS51（Embedded in Metal）and V680-D1KP52MT

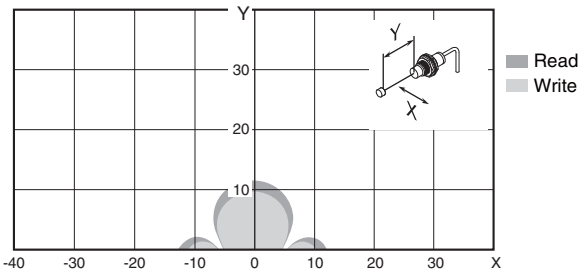

● V680-HS51（Embedded in Metal）and V680-D1KP52MT
(Embedded in Metal: Steel)

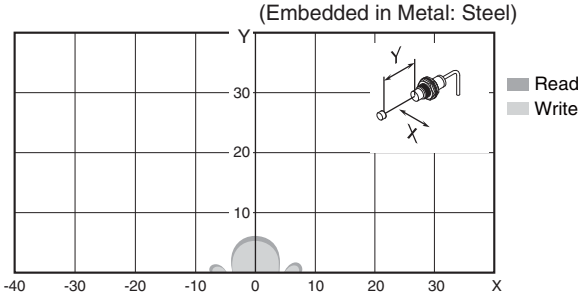

● V680-HS52（Embedded in Non-Metal）and V680-D1KP52MT

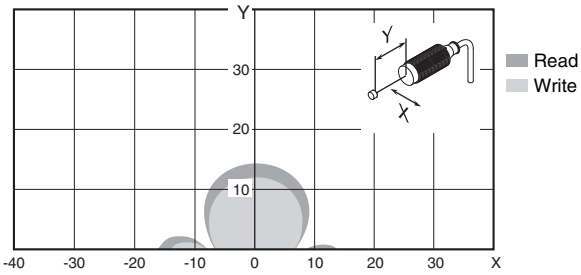

● V680-HS52（Embedded in Non-Metal）and V680-D1KP52MT
(Embedded in Metal: Steel)

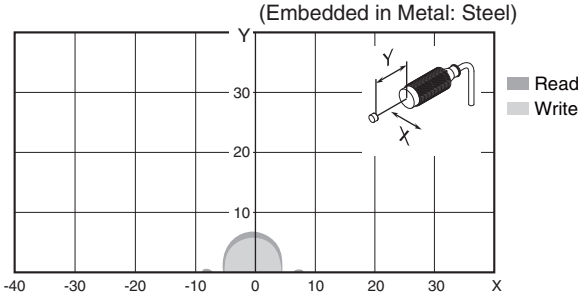

● V680-HS63（with Non-Metal on Back Surface）and V680-D1KP52MT

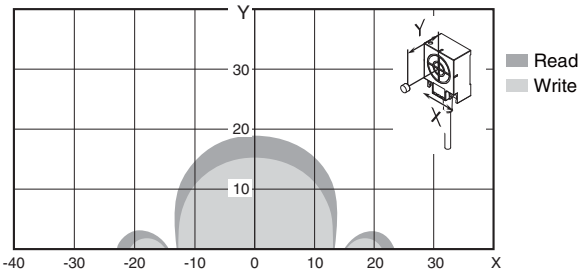

■ V680-D1KP52M-BT01/-D1KP52M-BT11

CHECK!

The interrogation zone given here are for reference only. For information on communications ranges, refer to *Communications Range Specifications* in this section. The interrogation zone depends on the type of RF Tags used, the ambient temperature, surrounding metals, and noise. Be sure to check carefully when installing the system.

p.122

●V680-HS51（Embedded in Metal）
and V680-D1KP52M-BT01/-D1KP52M-BT11

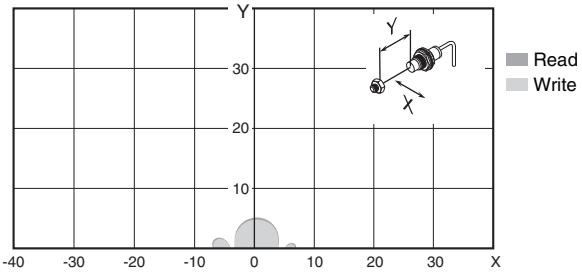

●V680-HS52（Embedded in Non-Metal）
and V680-D1KP52M-BT01/-D1KP52M-BT11

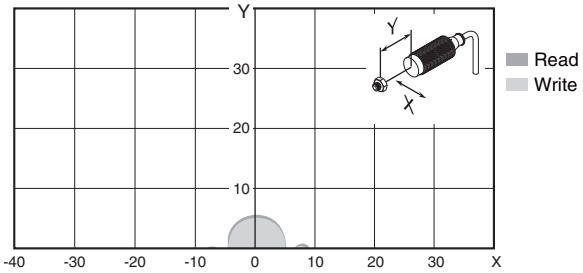

■ V680-D1KP53M

CHECK!

The interrogation zone given here are for reference only. For information on communications ranges, refer to *Communications Range Specifications* in this section. The interrogation zone depends on the type of RF Tags used, the ambient temperature, surrounding metals, and noise. Be sure to check carefully when installing the system.

p.122

● V680-HS51（Embedded in Metal）and V680-D1KP53M

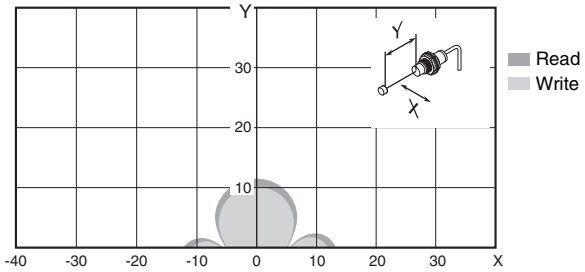

● V680-HS51（Embedded in Metal）and V680-D1KP53M
(Embedded in Metal: Steel)

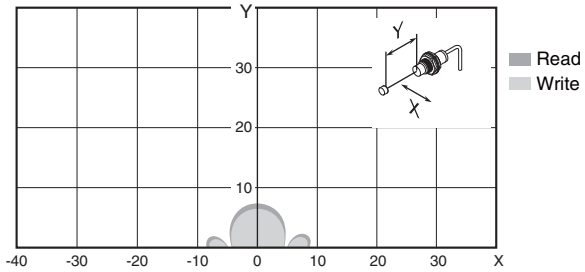

● V680-HS52（Embedded in Non-Metal）and V680-D1KP53M

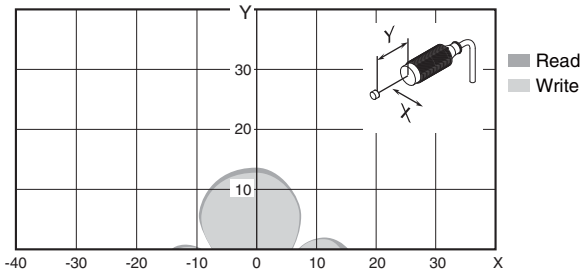

● V680-HS52（Embedded in Non-Metal）and V680-D1KP53M
(Embedded in Metal: Steel)

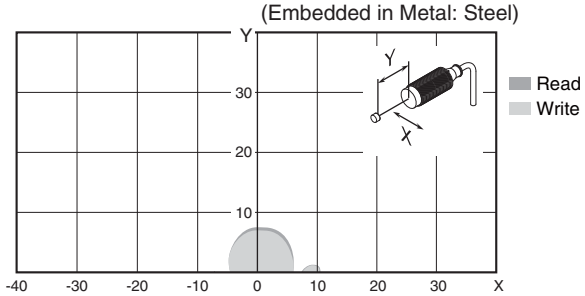

■ V680-D1KP54T

CHECK!

The interrogation zone given here are for reference only. For information on communications ranges, refer to *Communications Range Specifications* in this section. The interrogation zone depends on the type of RF Tags used, the ambient temperature, surrounding metals, and noise. Be sure to check carefully when installing the system.

p.122

● V680-HS52（Embedded in Non-Metal）and V680-D1KP54T

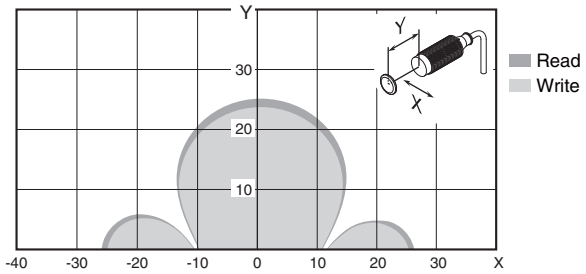

● V680-HS63（with Non-Metal on Back Surface）and V680-D1KP54T

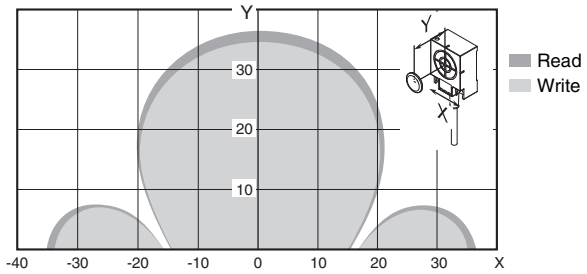

● V680-HS65（with Metal on Back Surface）and V680-D1KP54T

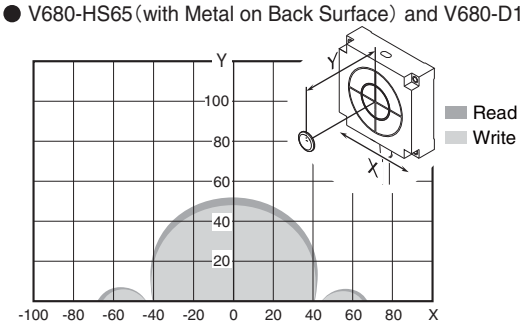

■ V680-D1KP66T

CHECK!

The interrogation zone given here are for reference only. For information on communications ranges, refer to *Communications Range Specifications* in this section. The interrogation zone depends on the type of RF Tags used, the ambient temperature, surrounding metals, and noise. Be sure to check carefully when installing the system.

p.122

● V680-HS52（Embedded in Non-Metal）and V680-D1KP66T

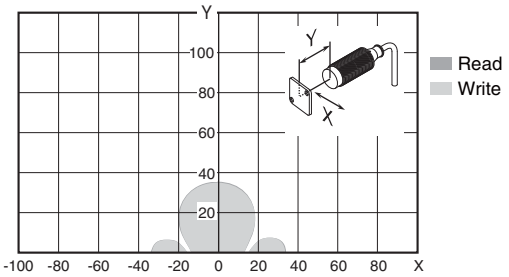

● V680-HS63（with Non-Metal on Back Surface）and V680-D1KP66T

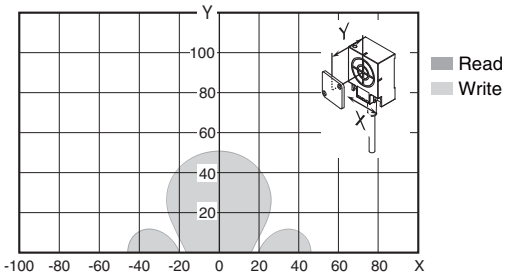

● V680-HS65（with Metal on Back Surface）and V680-D1KP66T

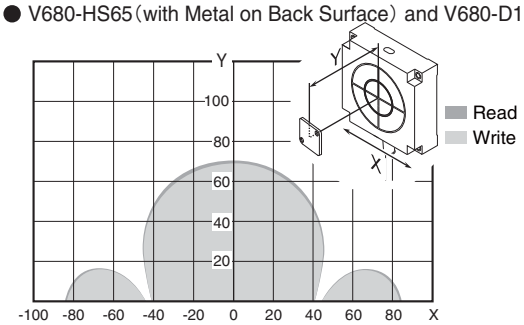

■ V680-D1KP66MT

CHECK!

The interrogation zone given here are for reference only. For information on communications ranges, refer to *Communications Range Specifications* in this section. The interrogation zone depends on the type of RF Tags used, the ambient temperature, surrounding metals, and noise. Be sure to check carefully when installing the system.

p.122

● V680-HS52（Embedded in Non-Metal）and V680-D1KP66MT with Metal on Back Surface (Steel)

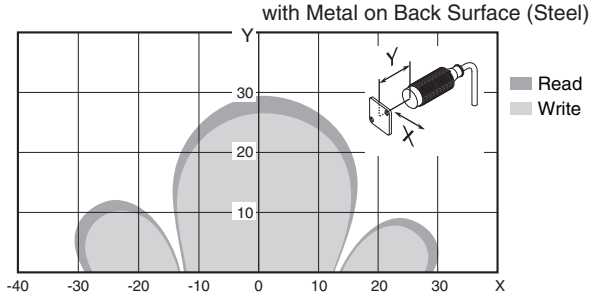

● V680-HS63（with Non-Metal on Back Surface）and V680-D1KP66MT with Metal on Back Surface (Steel)

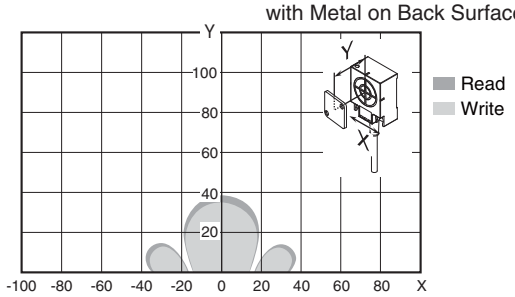

● V680-HS65（with Metal on Back Surface）and V680-D1KP66MT with Metal on Back Surface (Steel)

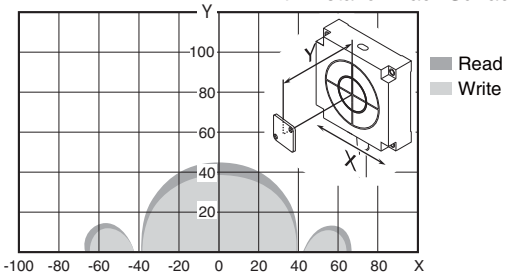

■ V680-D1KP66T-SP

CHECK!

The interrogation zone given here are for reference only. For information on communications ranges, refer to *Communications Range Specifications* in this section. The interrogation zone depends on the type of RF Tags used, the ambient temperature, surrounding metals, and noise. Be sure to check carefully when installing the system.

p.122

● V680-HS52（Embedded in Non-Metal）and V680-D1KP66T-SP

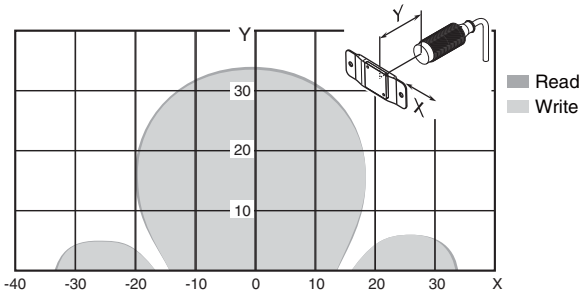

● V680-HS63（with Non-Metal on Back Surface）and V680-D1KP66T-S

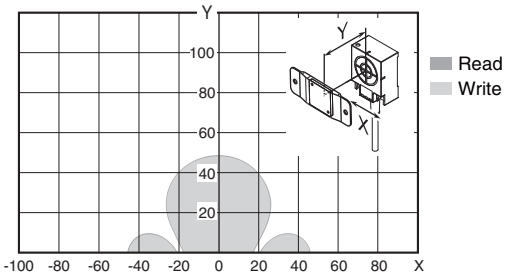

● V680-HS65（with Metal on Back Surface）and V680-D1KP66T-SP

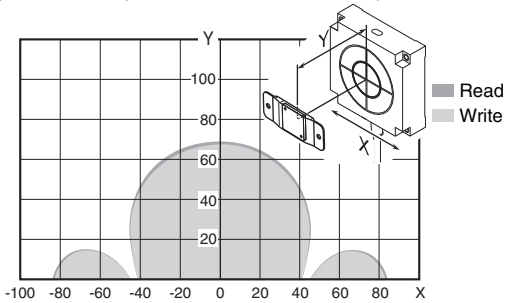

■ V680-D1KP58HTN

CHECK!

The interrogation zone given here are for reference only. For information on communications ranges, refer to *Communications Range Specifications* in this section. The interrogation zone depends on the type of RF Tags used, the ambient temperature, surrounding metals, and noise. Be sure to check carefully when installing the system.

p.129

● V680-HS65(with Metal on Back Surface) and V680-D1KP58HTN

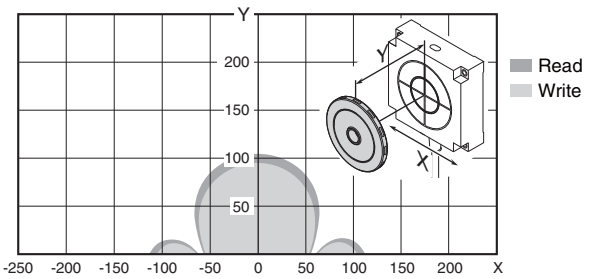

■ V680-D2KF52M

CHECK!

The interrogation zone given here are for reference only. For information on communications ranges, refer to *Communications Range Specifications* in this section. The interrogation zone depends on the type of RF Tags used, the ambient temperature, surrounding metals, and noise. Be sure to check carefully when installing the system.

p.122

● V680-HS51（Embedded in Metal）and V680-D2KF52M

・Read/Write

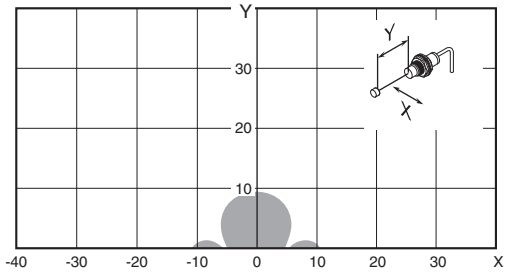

● V680-HS51（Embedded in Metal）and V680-D2KF52M (Embedded in Metal: Steel)

・Read/Write

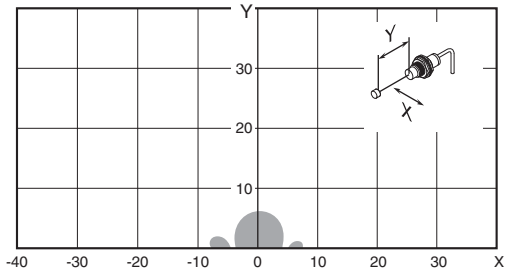

● V680-HS52（Embedded in Non-Metal）and V680-D2KF52M

・Read/Write

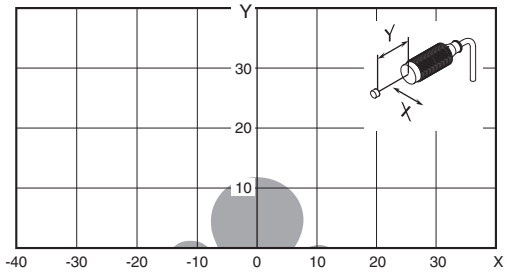

● V680-HS52（Embedded in Non-Metal）and V680-D2KF52M (Embedded in Metal: Steel)

・Read/Write

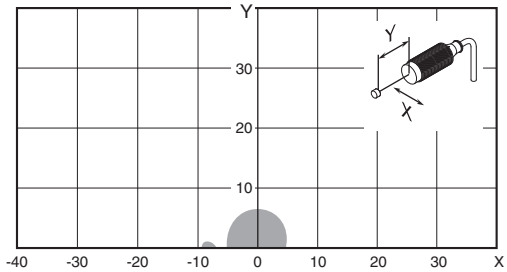

● V680-HS63（with Non-Metal on Back Surface）and V680-D2KF52M

・Read/Write

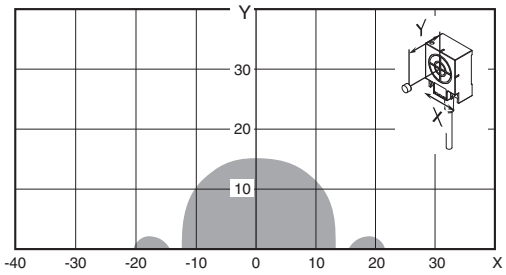

■ V680-D2KF52M-BT01/-D2KF52M-BT11

CHECK!

The interrogation zone given here are for reference only. For information on communications ranges, refer to *Communications Range Specifications* in this section. The interrogation zone depends on the type of RF Tags used, the ambient temperature, surrounding metals, and noise. Be sure to check carefully when installing the system.

p.122

●V680-HS51（Embedded in Metal）
and V680-D2KF52M-BT01/-D2KF52M-BT11

・Read/Write

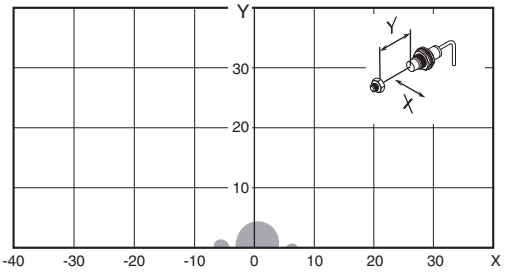

●V680-HS52（Embedded in Non-Metal）
and V680-D2KF52M-BT01/-D2KF52M-BT11

・Read/Write

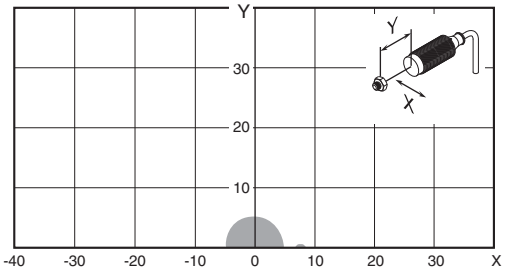

■ V680-D8KF67

CHECK!

The interrogation zone given here are for reference only. For information on communications ranges, refer to *Communications Range Specifications* in this section. The interrogation zone depends on the type of RF Tags used, the ambient temperature, surrounding metals, and noise. Be sure to check carefully when installing the system.

p.122

● V680-HS52（Embedded in Non-Metal）and V680-D8KF67

・Read/Write

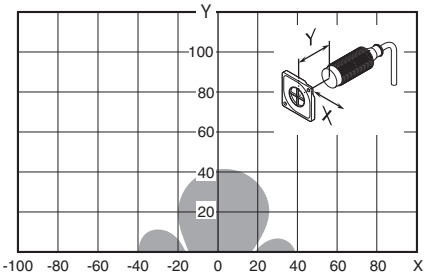

● V680-HS63（with Non-Metal on Back Surface）and V680-D8KF67

・Read/Write

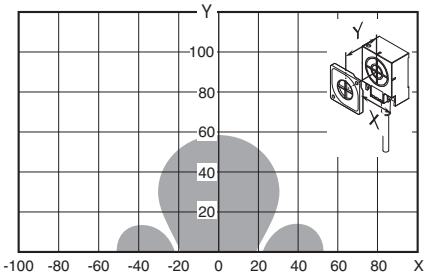

● V680-HS65（with Metal on Back Surface）and V680-D8KF67

・Read/Write

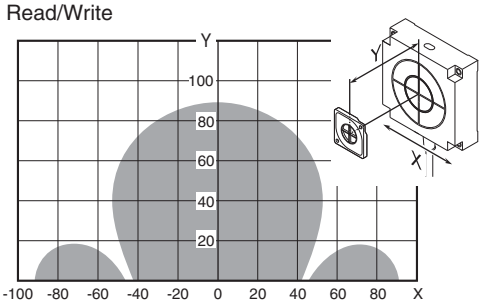

■ V680-D8KF67M

CHECK!

The interrogation zone given here are for reference only. For information on communications ranges, refer to *Communications Range Specifications* in this section. The interrogation zone depends on the type of RF Tags used, the ambient temperature, surrounding metals, and noise. Be sure to check carefully when installing the system.

p.122

● V680-HS52（Embedded in Non-Metal）and V680-D8KF67M with Metal on Back Surface (Steel)

・Read/Write

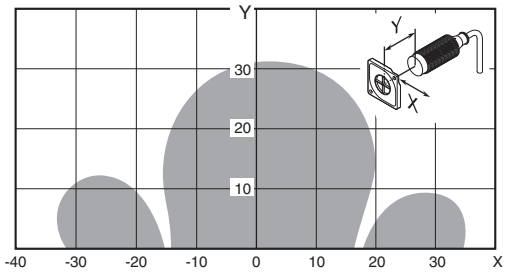

● V680-HS63（with Non-Metal on Back Surface）and V680-D8KF67M with Metal on Back Surface (Steel)

・Read/Write

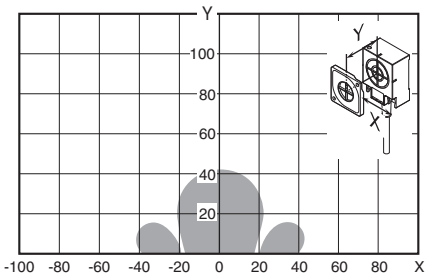

● V680-HS65（with Metal on Back Surface）and V680-D8KF67M with Metal on Back Surface (Steel)

・Read/Write

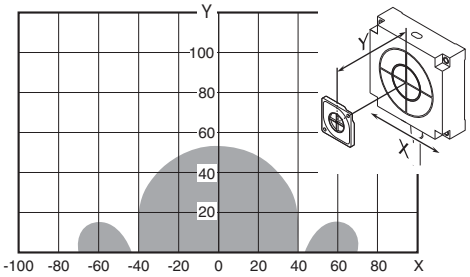

■ V680-D8KF68/-D32KF68

CHECK!

The interrogation zone given here are for reference only. For information on communications ranges, refer to *Communications Range Specifications* in this section. The interrogation zone depends on the type of RF Tags used, the ambient temperature, surrounding metals, and noise. Be sure to check carefully when installing the system.

p.122

● V680-HS63（with Metal on Back Surface）
and V680-D8KF68/-D32KF68
(Horizontal-facing RF Tag)

・Read/Write

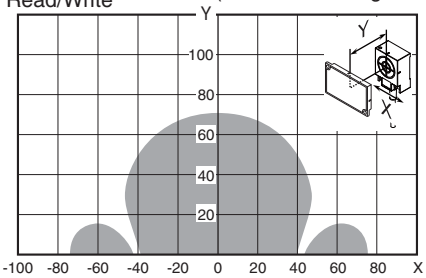

● V680-HS63（with Metal on Back Surface）
and V680-D8KF68/-D32KF68
(Vertical-facing RF Tag)

・Read/Write

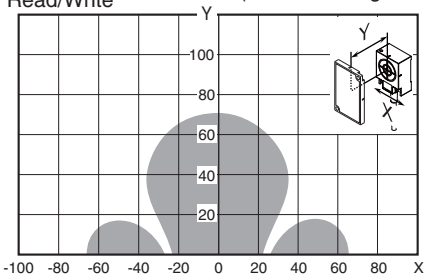

● V680-HS63（with Metal on Back Surface）
and V680-D8KF68/-D32KF68 (with Attachment, V680-A81)
Metal on back: Steel (Horizontal-facing RF Tag)

・Read/Write

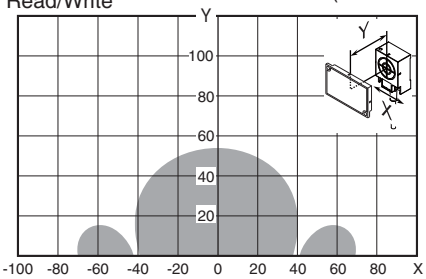

● V680-HS63（with Metal on Back Surface）
and V680-D8KF68/-D32KF68 (with Attachment, V680-A81)
Metal on back: Steel (Vertical-facing RF Tag)

・Read/Write

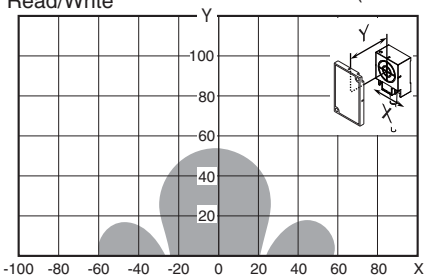

● V680-HS65（with Metal on Back Surface）
and V680-D8KF68/-D32KF68
(Horizontal-facing RF Tag)

・Read/Write

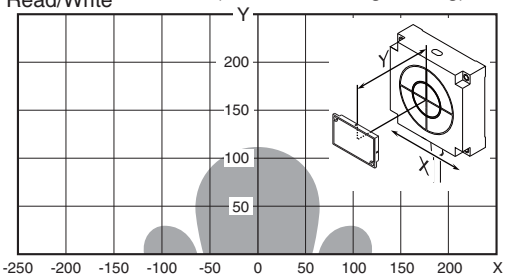

● V680-HS65（with Metal on Back Surface）
and V680-D8KF68/-D32KF68
(Vertical-facing RF Tag)

・Read/Write

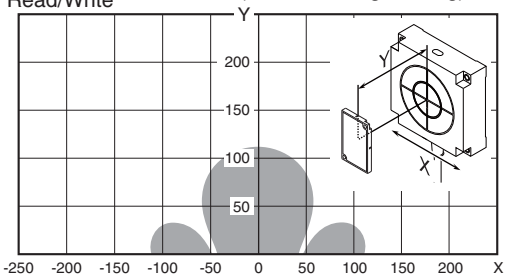

● V680-HS65（with Metal on Back Surface）
and V680-D8KF68/-D32KF68 (with Attachment, V680-A81)
Metal on back: Steel (Horizontal-facing RF Tag)

・Read/Write

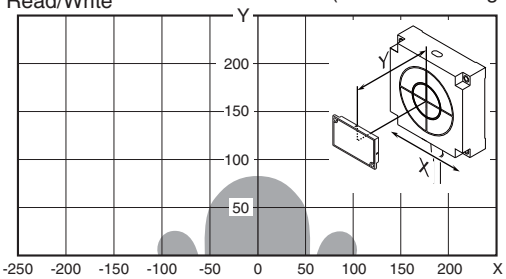

● V680-HS65（with Metal on Back Surface）
and V680-D8KF68/-D32KF68 (with Attachment, V680-A81)
Metal on back: Steel (Vertical-facing RF Tag)

・Read/Write

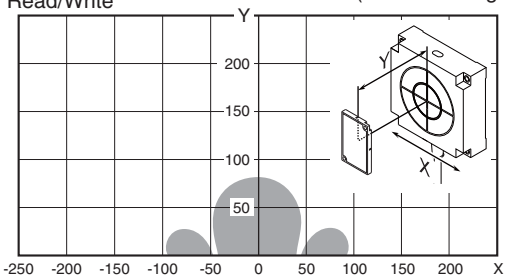

■ V680S-D2KF67

CHECK!

The interrogation zone given here are for reference only. For information on communications ranges, refer to *Communications Range Specifications* in this section. The interrogation zone depends on the type of RF Tags used, the ambient temperature, surrounding metals, and noise. Be sure to check carefully when installing the system.

p.122

● V680-HS52（Embedded in Non-Metal）and V680S-D2KF67

・Read/Write

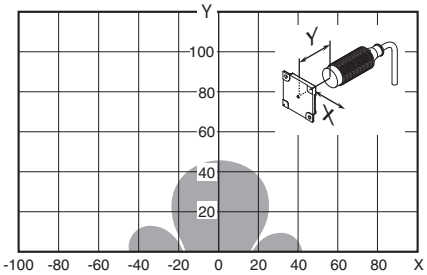

● V680-HS63（with Non-Metal on Back Surface）and V680S-D2KF67

・Read/Write

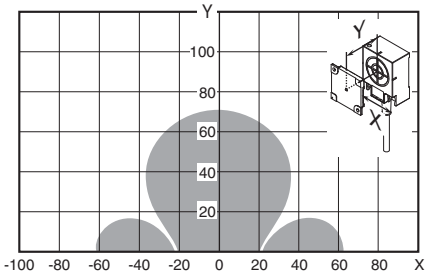

● V680-HS65（with Metal on Back Surface）and V680S-D2KF67

・Read/Write

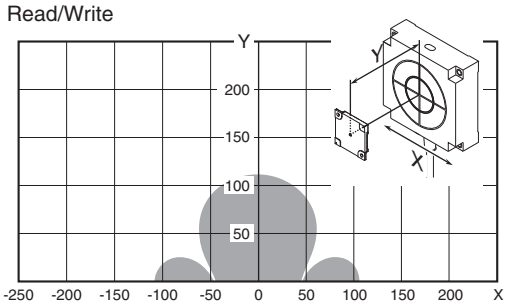

■ V680S-D2KF67M

CHECK!

The interrogation zone given here are for reference only. For information on communications ranges, refer to *Communications Range Specifications* in this section. The interrogation zone depends on the type of RF Tags used, the ambient temperature, surrounding metals, and noise. Be sure to check carefully when installing the system.

p.122

● V680-HS52（Embedded in Non-Metal）and V680S-D2KF67M with Metal on Back Surface (Steel)

・Read/Write

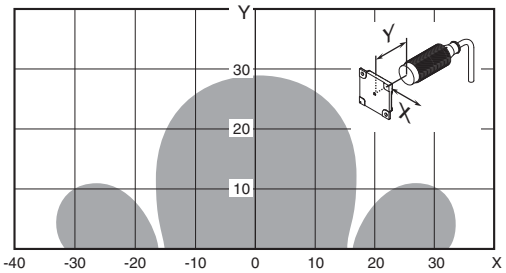

● V680-HS63（with Non-Metal on Back Surface）and V680S-D2KF67M with Metal on Back Surface (Steel)

・Read/Write

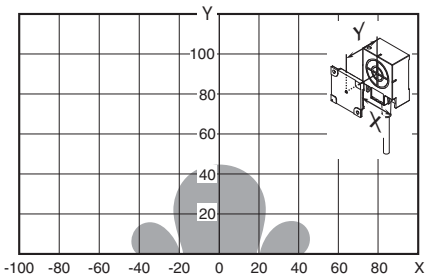

● V680-HS65（with Metal on Back Surface）and V680S-D2KF67M with Metal on Back Surface (Steel)

・Read/Write

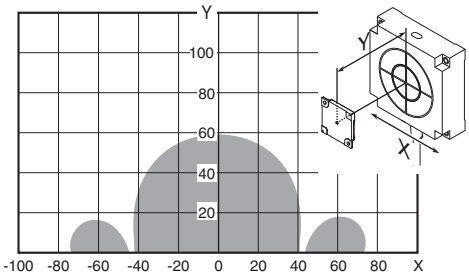

■ V680S-D2KF68

CHECK!

The interrogation zone given here are for reference only. For information on communications ranges, refer to *Communications Range Specifications* in this section. The interrogation zone depends on the type of RF Tags used, the ambient temperature, surrounding metals, and noise. Be sure to check carefully when installing the system.

p.122

● V680-HS63（with Metal on Back Surface）
and V680S-D2KF68
(Horizontal-facing RF Tag)

・Read/Write

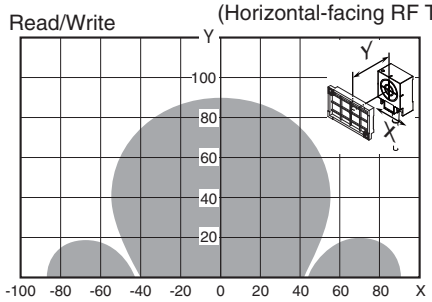

● V680-HS63（with Metal on Back Surface）
and V680S-D2KF68
(Vertical-facing RF Tag)

・Read/Write

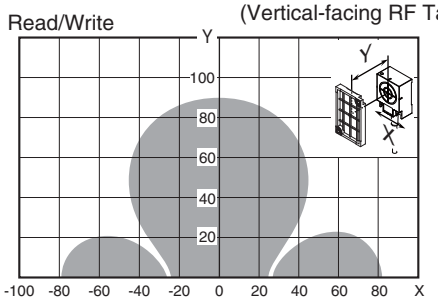

● V680-HS65（with Metal on Back Surface）
and V680S-D2KF68
(Horizontal-facing RF Tag)

・Read/Write

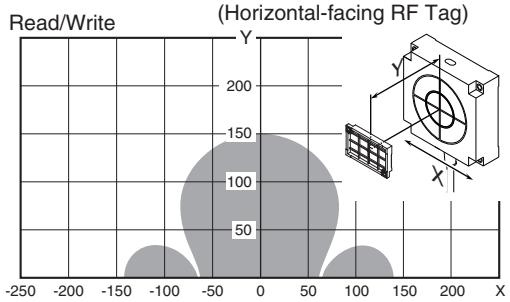

● V680-HS65（with Metal on Back Surface）
and V680S-D2KF68
(Vertical-facing RF Tag)

・Read/Write

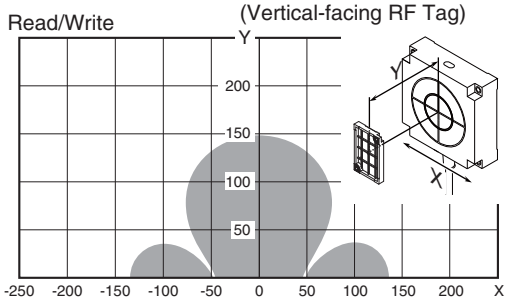

■ V680S-D2KF68M

CHECK!

The interrogation zone given here are for reference only. For information on communications ranges, refer to *Communications Range Specifications* in this section. The interrogation zone depends on the type of RF Tags used, the ambient temperature, surrounding metals, and noise. Be sure to check carefully when installing the system.

p.122

● V680-HS63 (with Metal on Back Surface) and V680S-D2KF68M
Metal on back: Steel (Horizontal-facing RF Tag)

・Read/Write

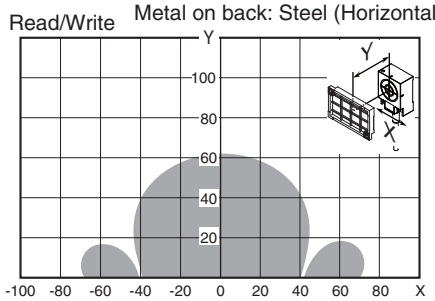

● V680-HS63 (with Metal on Back Surface) and V680S-D2KF68M
Metal on back: Steel (Vertical-facing RF Tag)

・Read/Write

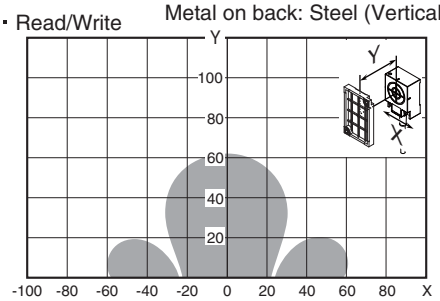

● V680-HS65 (with Metal on Back Surface) and V680S-D2KF68M
Metal on back: Steel (Horizontal-facing RF Tag)

・Read/Write

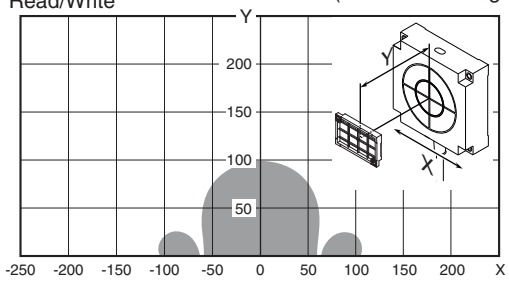

● V680-HS65 (with Metal on Back Surface) and V680S-D2KF68M
Metal on back: Steel (Vertical-facing RF Tag)

・Read/Write

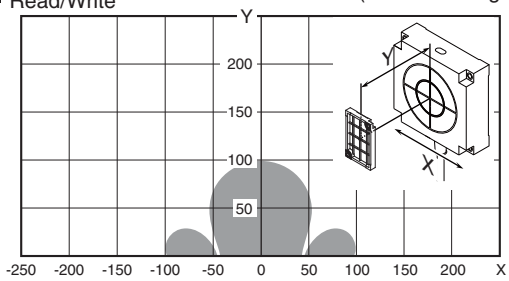

■ V680S-D8KF67

CHECK!

The interrogation zone given here are for reference only. For information on communications ranges, refer to *Communications Range Specifications* in this section. The interrogation zone depends on the type of RF Tags used, the ambient temperature, surrounding metals, and noise. Be sure to check carefully when installing the system.

p.139

● V680-HS52（Embedded in Non-Metal）and V680S-D8KF67

・Read/Write

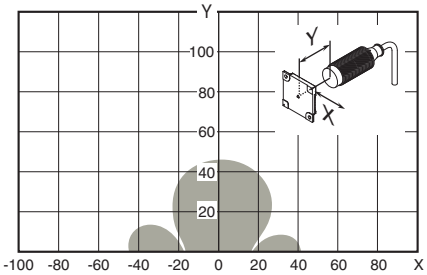

● V680-HS63（with Non-Metal on Back Surface）and V680S-D8KF67

・Read/Write

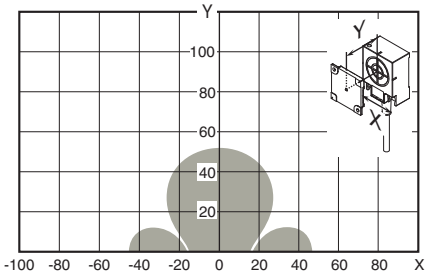

● V680-HS65（with Metal on Back Surface）and V680S-D8KF67

・Read/Write

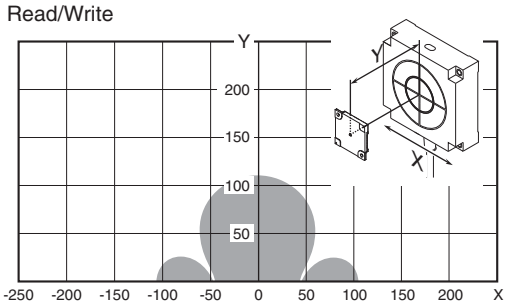

■ V680S-D8KF67M

CHECK!

The interrogation zone given here are for reference only. For information on communications ranges, refer to *Communications Range Specifications* in this section. The interrogation zone depends on the type of RF Tags used, the ambient temperature, surrounding metals, and noise. Be sure to check carefully when installing the system.

p.140

● V680-HS52（Embedded in Non-Metal）and V680S-D8KF67M with Metal on Back Surface (Steel)

・Read/Write

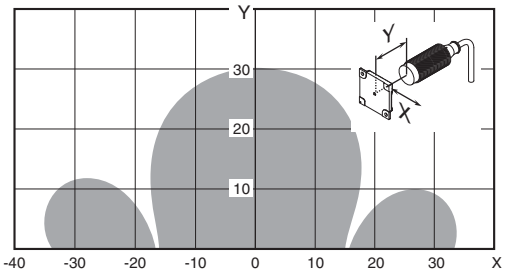

● V680-HS63（with Non-Metal on Back Surface）and V680S-D8KF67M with Metal on Back Surface (Steel)

・Read/Write

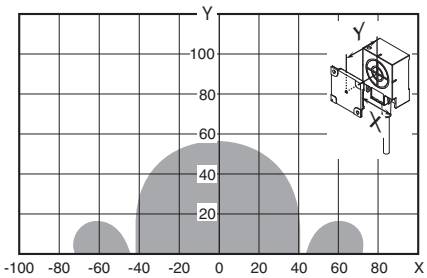

● V680-HS65（with Metal on Back Surface）and V680S-D8KF67M with Metal on Back Surface (Steel)

・Read/Write

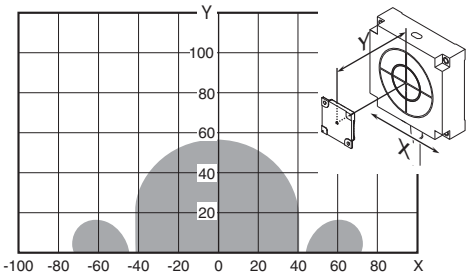

■ V680S-D8KF68

CHECK!

The interrogation zone given here are for reference only. For information on communications ranges, refer to *Communications Range Specifications* in this section. The interrogation zone depends on the type of RF Tags used, the ambient temperature, surrounding metals, and noise. Be sure to check carefully when installing the system.

p.141

● V680-HS63（with Metal on Back Surface）
and V680S-D8KF68
(Horizontal-facing RF Tag)

・Read/Write

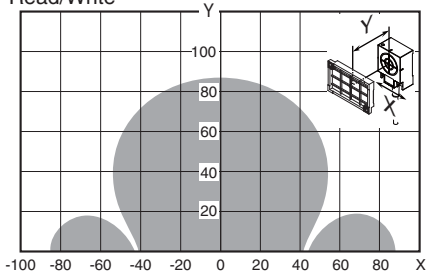

● V680-HS63（with Metal on Back Surface）
and V680S-D8KF68
(Vertical-facing RF Tag)

・Read/Write

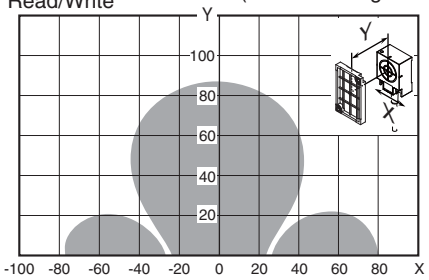

● V680-HS65（with Metal on Back Surface）
and V680S-D8KF68
(Horizontal-facing RF Tag)

・Read/Write

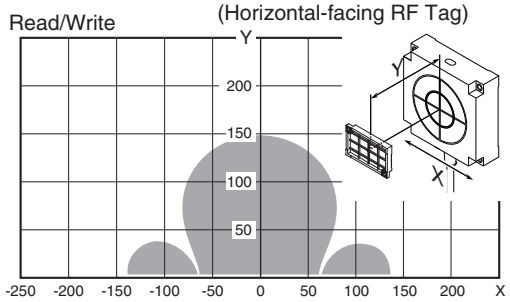

● V680-HS65（with Metal on Back Surface）
and V680S-D8KF68
(Vertical-facing RF Tag)

・Read/Write

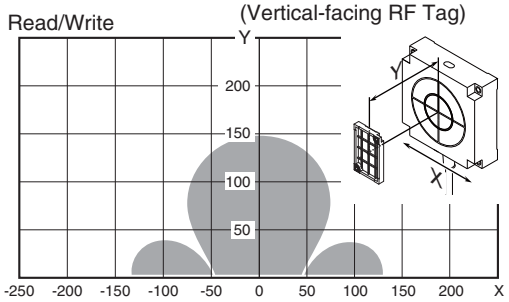

■ V680S-D8KF68M

CHECK!

The interrogation zone given here are for reference only. For information on communications ranges, refer to *Communications Range Specifications* in this section. The interrogation zone depends on the type of RF Tags used, the ambient temperature, surrounding metals, and noise. Be sure to check carefully when installing the system.

p.141

● V680-HS63（with Metal on Back Surface）
and V680S-D8KF68M
Metal on back: Steel (Horizontal-facing RF Tag)

・Read/Write

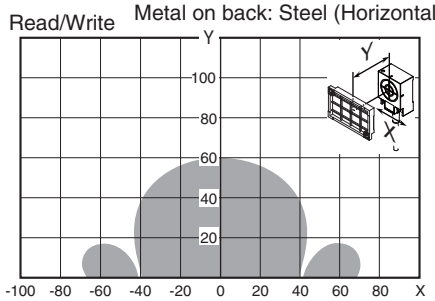

● V680-HS63（with Metal on Back Surface）
and V680S-D8KF68M
Metal on back: Steel (Vertical-facing RF Tag)

・Read/Write

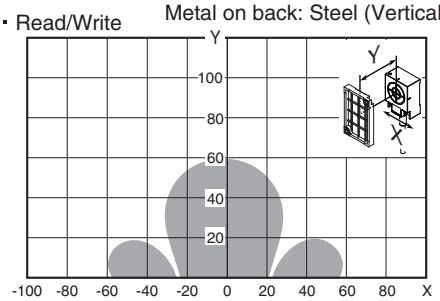

● V680-HS65（with Metal on Back Surface）
and V680S-D8KF68M
Metal on back: Steel (Horizontal-facing RF Tag)

・Read/Write

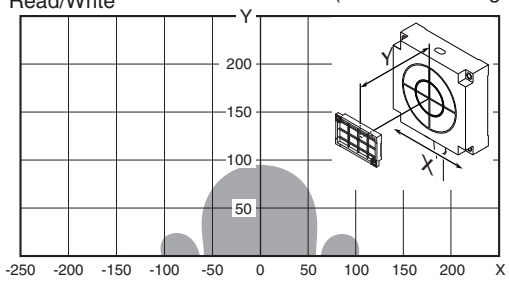

● V680-HS65（with Metal on Back Surface）
and V680S-D8KF68M
Metal on back: Steel (Vertical-facing RF Tag)

・Read/Write

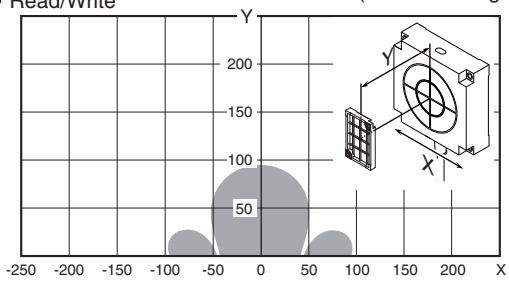

Communications Time (Reference)

The communications time is the processing time required for communications between the Antenna and the RF Tag.

■ 1-Kbyte memory RF Tags

▪ V680-D1KP□□ (V680-HS□□ Antenna)

communications time setting	Command	Communication time (msec)			
		4-byte Access mode	26-byte Access mode	58-byte Access mode	V600-compatible mode
Standard	Read	67	95	137	67
	Write (with verify)	105	143	210	105
	Data fill	17.5 × Number of blocks to process + 89.2			---
Speed	Read	63	85	117	---
	Write (with verify)	89	128	186	---
	Data fill	14.8 × Number of blocks to process + 71.7			---

■ 2-Kbyte memory RF Tags

▪ V680-D2KF□□ and V680S-D2KF□□(V680-HS□□ Antenna)

communications time setting	Command	Communication time (msec)			
		4-byte Access mode	26-byte Access mode	58-byte Access mode	V600-compatible mode
Standard	Read	65	92	130	65
	Write (with verify)	105	142	219	105
	Data fill	17.5 × Number of blocks to process + 89.2			---
Speed	Read	61	81	110	---
	Write (with verify)	86	124	178	---
	Data fill	14.8 × Number of blocks to process + 71.7			---

■ 8-Kbyte/32-Kbyte memory RF Tags

▪ V680-D8KF□□ and V680-D32KF68(V680-HS□□ Antenna)

communications time setting	Command	Communication time (msec)			
		4-byte Access mode	26-byte Access mode	58-byte Access mode	V600-compatible mode
Standard	Read	66	94	136	66
	Write (with verify)	96	131	182	96
	Data fill	17.5 × Number of blocks to process + 89.2			---
Speed	Read	59	76	102	---
	Write (with verify)	76	100	135	---
	Data fill	14.8 × Number of blocks to process + 71.7			---

CHECK!

"Blocks to process" means the 8-byte memory areas expressed with RF Tags □□□0 to □□□7 hex and □□□8 to □□□F hex.

CHECK!

Setting the communications time setting for high-speed communications will reduce noise resistance.

■ 8-Kbyte memory RF Tags

▪ V680S-D8KF□□ (V680-HS□□ Antenna)

communications time setting	Command	Communication time (msec)			
		4-byte Access mode	26-byte Access mode	58-byte Access mode	V600-compatible mode
Standard	Read	42	42	60	42
	Write (with verify)	133	133	170	133
	Data fill	9.1 × Number of blocks to process + 105.5			---
Speed	Read	42	42	60	42
	Write (with verify)	133	133	170	133
	Data fill	9.1 × Number of blocks to process + 105.5			---

CHECK!

"Blocks to process" means the 32-byte memory areas expressed with RF Tags □□00 to □□17 hex, □□20 to □□3F hex, ··· , and □□E0 to □□FF hex.

CHECK!

Setting the communications time setting for high-speed communications will reduce noise resistance.

TAT (Reference)

The TAT (Turnaround Time) is the time from when the ID Slave's Command Execution Bit turns ON until the RF Tag is communicated with and execution results are returned. The TAT can be calculated with the following formula:

TAT = DeviceNet communications time + RFID communications time

RFID communications time : The communications processing time between the Antenna and the RF Tag.

CHECK! For details, refer to Communications Time (Reference) in this section.

p.164

DeviceNet communications time : The communications processing time between the host device (e.g., DeviceNet Master) and the ID Slave.

CHECK! Fordetails, refer to *Section8: Communications Timeng* in the DeviceNet Unit Operation Manual (Cat. No. W380).

Reference Data

Antenna Mounting Precautions

■ V680-HS51

▪ Effect of Surrounding Metals on the Antenna (Reference)

When embedding the Antenna in metal, be sure the metal does not extend beyond the tip of the Antenna.

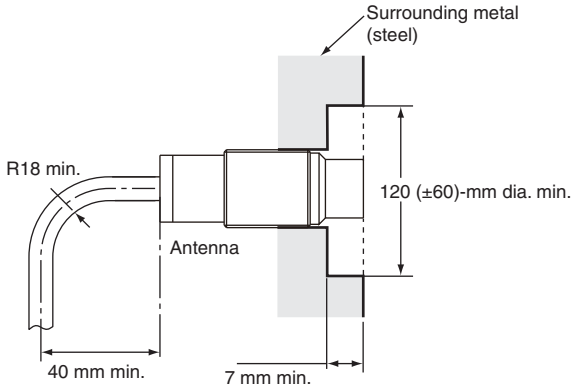

Do not bend the cable into a curve tighter than 18 mm in radius.

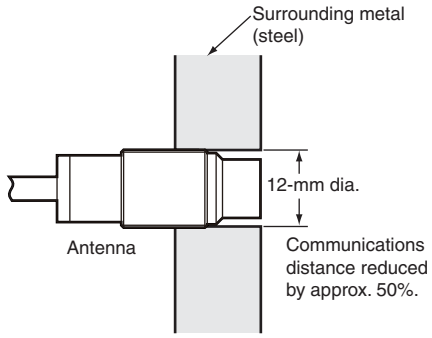

If the metal around the Antenna reaches the communication surface, the communications distance will be reduced by approx. 50% compared with mounting to a non-metallic surface.

▪ Mutual Interference between Antennas (Reference)

To prevent malfunctioning due to mutual interference when using more than one Antenna, leave sufficient space between them as shown in the following diagrams.

- Installing the Antennas Facing Each Other
- Installing the Antennas in Parallel

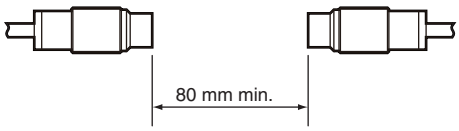

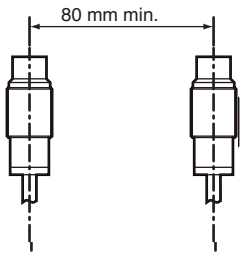

■V680-HS52

•Effect of Surrounding Meta ls on the Antenna (Reference)

When embedding the Antenna in metal, be sure the metal does not extend beyond the tip of the Antenna.

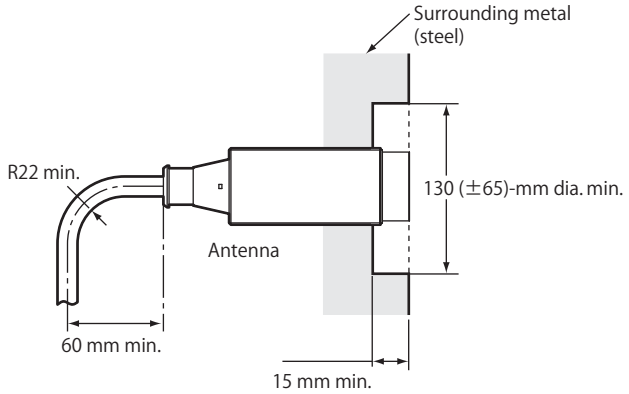

Do not bend the cable into a curve tighter than 22 mm in radius.

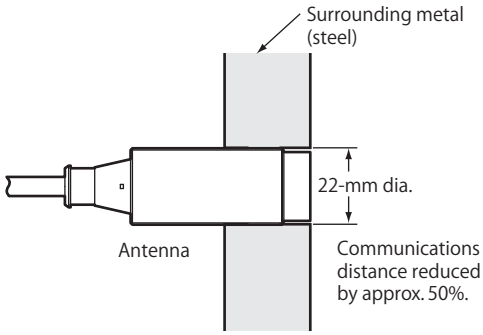

If the metal around the Antenna reaches the coil surface, the communications distance will be reduced by approx. 50% compared with mounting to a non-metallic surface.

•Mutual Interference be tween Antennas (Reference)

To prevent malfunctioning due to mutual interference when using more than one Antenna, leave sufficient space between them as shown in the following diagrams.

• Installing the AntennasFacing Each Other

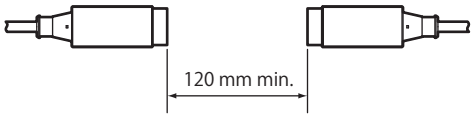

• Installing the Antennas in Parallel

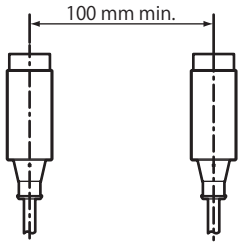

■V680-HS61

• Effect of Surrounding Metals on the Antenna (Reference)

In addition to surface mounting, it is also possible to embed the V680-HS61 in a metallic material to protect it from being struck bu other objects. To prevent malfunctioning, allow a space of at least 60 mm between the Antenna and the sides of the merallic material. If the space is less than 60 mm, the read/write distance will be greatly diminished. In addition, the height of metallic material must not exceed that of the Antenna.

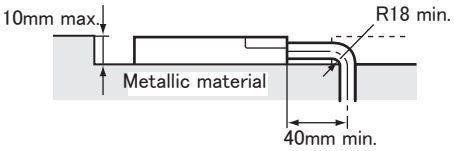

Do not bend the cable into a curve tighter than 18 mm in radius.

The communications range will be reduced significantly if the Antenna is installed closer than 60 mm to metal surfaces.

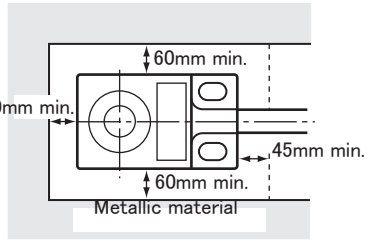

• Mutual Interference beween Antennas (Reference)

To prevent malfunctioning due to mutual interference when using more than one Antenna, leave sufficient space between them as shown in the following diagrams.

• Installing the Antennas Facing Each Other

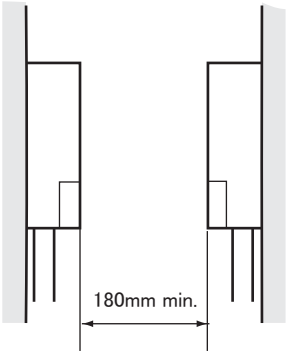

• Installing the Antennas in Parallel

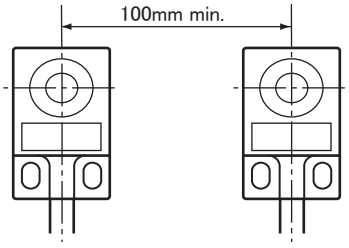

■ V680-HS63

▪ Effect of Surrounding Metals on the Antenna (Reference)

In addition to surface mounting, it is also possible to embed the V680-HS63 in a metallic material to protect it from being struck by other objects. To prevent malfunctioning, allow a space of at least 30 mm between the Antenna and the sides of the metallic material. If the space is less than 30 mm, the read/write range will be greatly diminished. In addition, the height of metallic material must not exceed that of the Antenna.

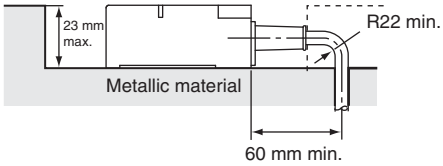

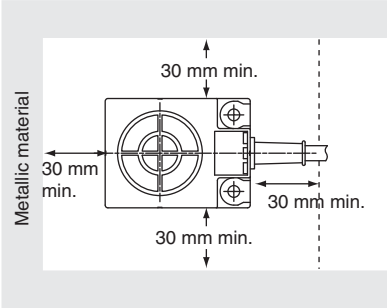

Note 1: Do not bend the cable into a curve tighter than 22 mm in radius.
2: The communications range will be reduced significantly if the Antenna is installed closer than 30 mm to metal surfaces.

▪ Mutual Interference between Antennas (Reference)

To prevent malfunctioning due to mutual interference when using more than one Antenna, leave sufficient space between them as shown in the following diagrams.

- Installing the Antennas Facing Each Other
- Installing the Antennas in Parallel

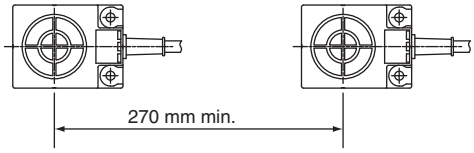

■ V680-HS65

▪ Effect of Surrounding Metals on the Antenna (Reference)

In addition to surface mounting, it is also possible to embed the V680-HS65 in a metallic material to protect it from being struck by other objects. To prevent malfunctioning, allow a space of at least 100 mm between the Antenna and the sides of the metallic material. If the space is less than 100 mm, the read/write range will be greatly diminished. In addition, the height of metallic material must not exceed that of the Antenna.

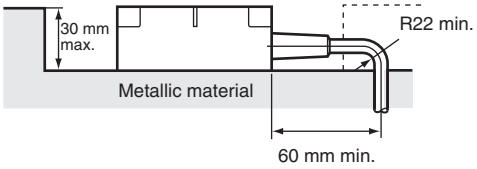

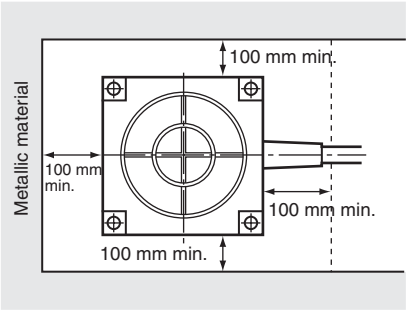

Note 1: Do not bend the cable into a curve tighter than 22 mm in radius.
2: The communications range will be reduced significantly if the Antenna is installed closer than 100 mm to metal surfaces.

▪ Mutual Interference between Antennas (Reference)

To prevent malfunctioning due to mutual interference when using more than one Antenna, leave sufficient space between them as shown in the following diagrams.

- Installing the Antennas Facing Each Other
- Installing the Antennas in Parallel

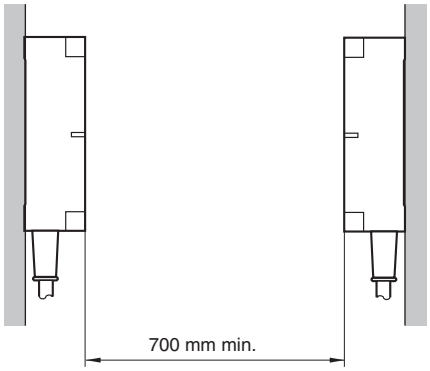

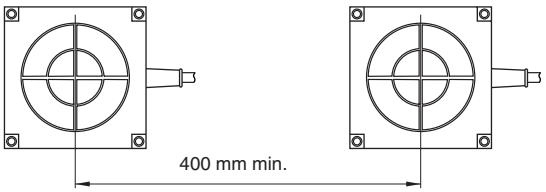

RF Tag Mounting Precautions

■ V680-D1KP52MT

▪ Differences in Surrounding Metals(Reference)

communications ranges are affected by the type of metal in back of or surrounding the RF Tag, as shown in the following table.

	Steel	SUS	Brass	Aluminum
V680-D2KF52M	100%	85% to 90%	80% to 85%	80% to 85%

Note: The value for steel around or behind the RF Tag is set to 100%.

▪ Mutual Interference with RF Tags (Reference)

To prevent malfunctioning due to mutual interference when using more than one RF Tag, leave sufficient space between them as shown in the following diagram.

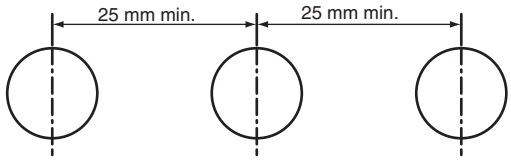

▪ Influence of RF Tag Angle (Reference)

Install Antennas and RF Tags as close to parallel to each other as possible.
Communications are possible even when an Antenna and an RF Tag are mounted at an angle, but the communications range will be shortened. The relation between the angle and the communications range is shown below.

Percentage of Change in Communications Range for 680-D1KP52MT Angle

	RF Tag angle (θ°)				
	0	10	20	30	40
V680-HS51 and V680-D1KP52MT	0%	–1%	–5%	–10%	–15%
V680-HS51 and V680-D1KP52MT (Metal on back: Steel)	0%	0%	0%	–4%	–28%
V680-HS52 and V680-D1KP52MT	0%	0%	0%	–2%	–6%
V680-HS52 and V680-D1KP52MT (Metal on back: Steel)	0%	–6%	–13%	–25%	---
V680-HS63 and V680-D1KP52MT	0%	–2%	–5%	–9%	–14%

---: Measurement is not possible because Antenna and RF Tag would strike each other.

Measurement Conditions

● V680-HS51 and V680-D1KP52MT

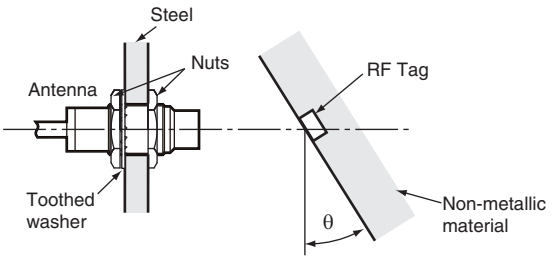

● V680-HS51 and V680-D1KP52MT (Metal on back: Steel)

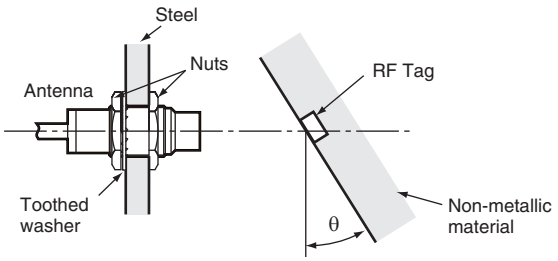

● V680-HS52 and V680-D1KP52MT

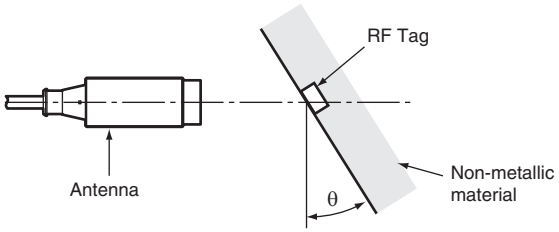

● V680-HS52 and V680-D1KP52MT (Metal on back: Steel)

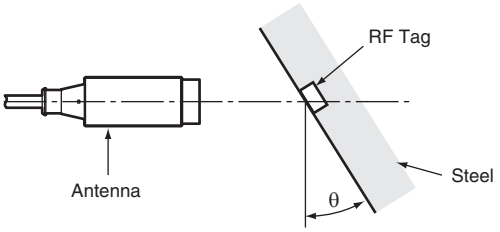

● V680-HS63 and V680-D1KP52MT

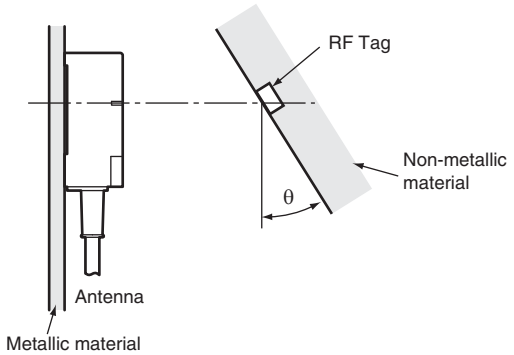

■ V680-D1KP52M-BT01/-D1KP52M-BT11

▪ Mutual Interference with RF Tags (Reference)

To prevent malfunctioning due to mutual interference when using more than one RF Tag, leave sufficient space between them as shown in the following diagram.

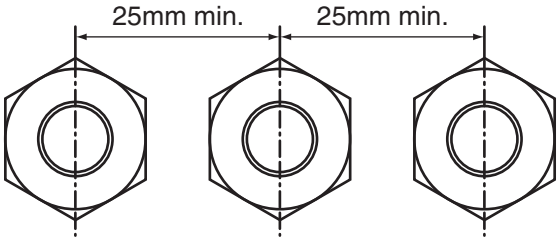

▪ Influence of RF Tag Angle (Reference)

Install Antennas and RF Tags as close to parallel to each other as possible.
Communications are possible even when an Antenna and an RF Tag are mounted at an angle, but the communications range will be shortened. The relation between the angle and the communications range is shown below.

Percentage of Change in Communications Range for 680-D1KP52M-BT01/-D1KP52M-BT11 Angle

	RF Tag angle (θ°)				
	0	10	20	30	40
V680-HS51 and V680-D1KP52M-BT01/-D1KP52M-BT11	0%	–18%	–36%	---	---
V680-HS52 and V680-D1KP52M-BT01/-D1KP52M-BT11	0%	–34%	–50%	---	---

---: Measurement is not possible because Antenna and RF Tag would strike each other.

Measurement Conditions

● V680-HS51
and V680-D1KP52M-BT01/-D1KP52M-BT11

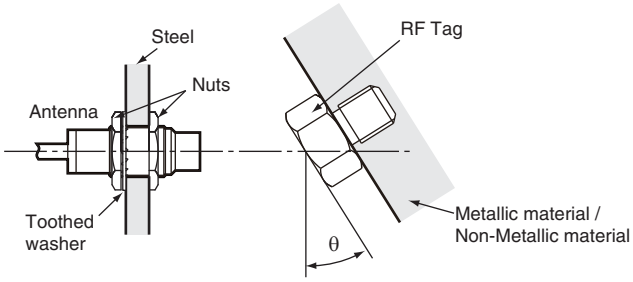

● V680-HS52
and V680-D1KP52M-BT01/-D1KP52M-BT11

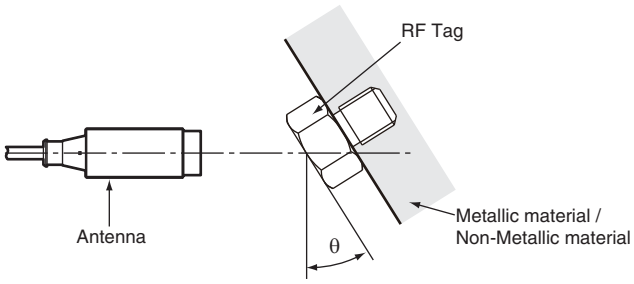

■ V680-D1KP53M

▪ Differences in Surrounding Metals (Reference)

Communications ranges are affected by the type of metal in back of or surrounding the RF Tag, as shown in the following table.

	Steel	SUS	Brass	Aluminum
V680-D1KP53M	100%	90% to 95%	90% to 95%	90% to 95%

Note: The value for steel around or behind the RF Tag is set to 100%.

▪ Mutual Interference with RF Tags (Reference)

To prevent malfunctioning due to mutual interference when using more than one RF Tag, leave sufficient space between them as shown in the following diagram.

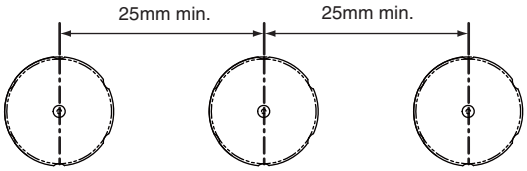

▪ Influence of RF Tag Angle (Reference)

Install Antennas and RF Tags as close to parallel to each other as possible.
Communications are possible even when an Antenna and an RF Tag are mounted at an angle, but the communications range will be shortened. The relation between the angle and the communications range is shown below.

Percentage of Change in Communications Range for 680-D1KP53M Angle

	RF Tag angle (θ°)				
	0	10	20	30	40
V680-HS51 and V680-D1KP53M	0%	–1%	–5%	–10%	–15%
V680-HS51 and V680-D1KP53M (Metal on back: Steel)	0%	0%	0%	–4%	–28%
V680-HS52 and V680-D1KP53M	0%	0%	0%	–2%	–6%
V680-HS52 and V680-D1KP53M (Metal on back: Steel)	0%	–6%	–13%	–25%	---

---: Measurement is not possible because Antenna and RF Tag would strike each other.

Measurement Conditions

● V680-HS51 and V680-D1KP53M

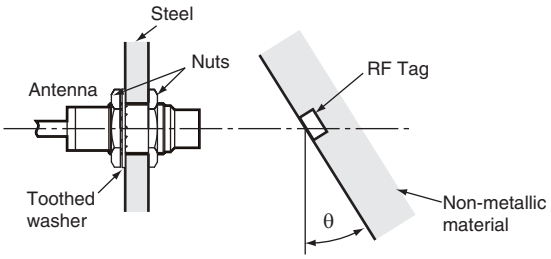

● V680-HS51 and V680-D1KP53M (Metal on back: Steel)

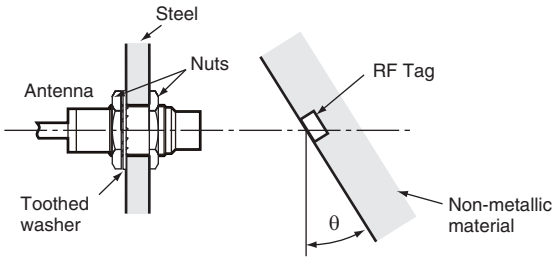

● V680-HS52 and V680-D1KP53M

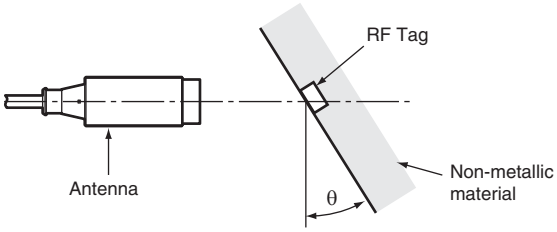

● V680-HS52 and V680-D1KP53M (Metal on back: Steel)

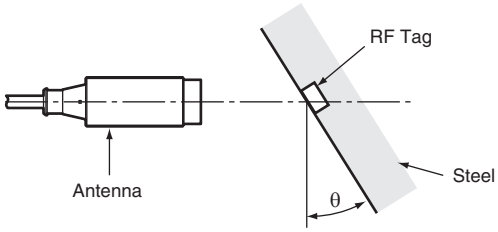

■ V680-D1KP54T

▪ Effect of Metal behind RF Tags(Reference)

The V680-D1KP54T communications distance is reduced if there is any metal material behind the RF Tag.

If the RF Tag is to be mounted to metal, then use a insert a non-metal spacer (such as plastic or resin).

The relationship between the distance from the RF Tag to the metal surface and the communications distance is shown below.

The V700-A80 Attachment is 8 mm thick.

● V680-HS52 and V680-D1KP54T

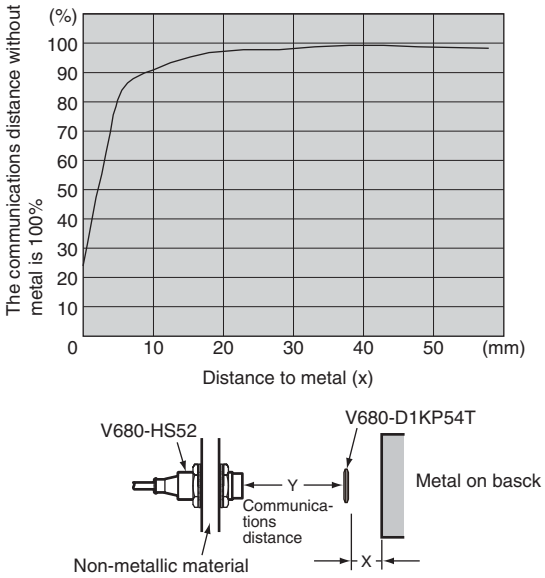

● V680-HS63 and V680-D1KP54T

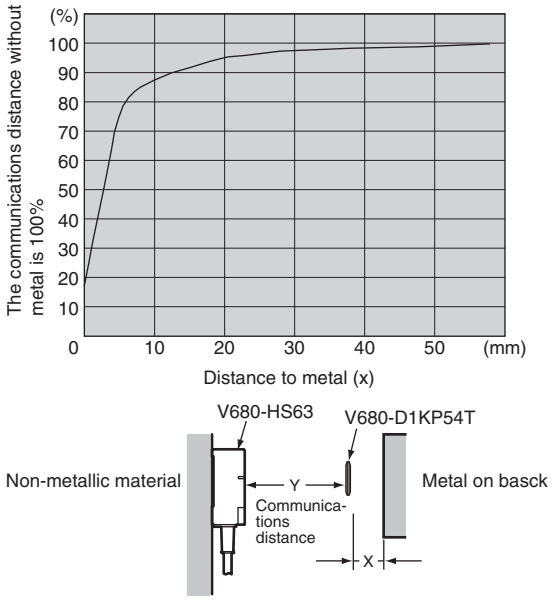

● V680-HS65 and V680-D1KP54T

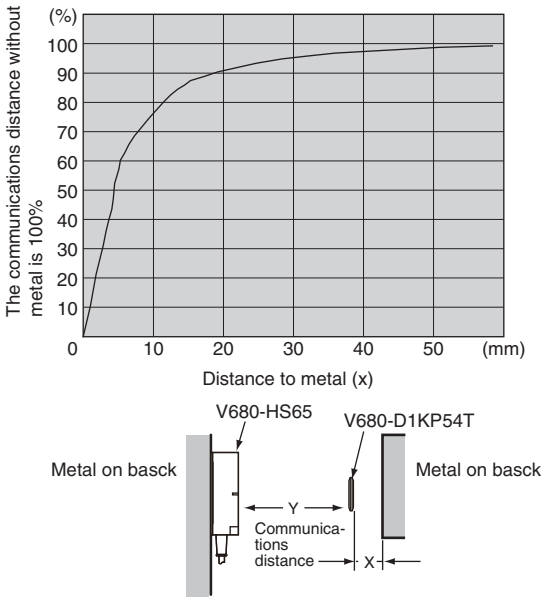

▪ Mutual Interference with RF Tags (Reference)

To prevent malfunctioning due to mutual interference when using more than one RF Tag, leave sufficient space between them as shown in the following diagram.

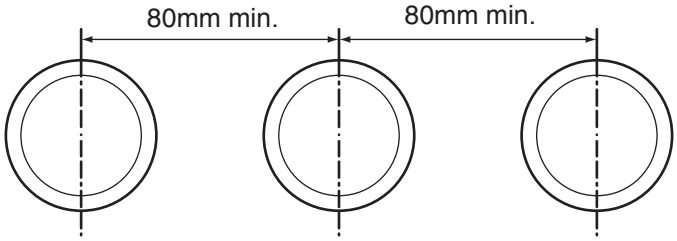

▪ Influence of RF Tag Angle (Reference)

Install Antennas and RF Tags as parallel to each other as possible. Communications are possible even when an Antenna and a RF Tag are mounted at an angle, but the communications distance will be shortened. The relation between the angle and the communications distance is shown below.

Percentage Drop in Communications Distance According to Angle of V680-D1KP54T

	RF Tag angle (θ°)				
	0	10	20	30	40
V680-HS52 and V680-D1KP54T	0%	0%	0%	0%	0%
V680-HS63 and V680-D1KP54T	0%	-1%	-1%	-2%	-4%
V680-HS65 and V680-D1KP54T	0%	-1%	-3%	-7%	-15%

Measurement Conditions

- V680-HS52 and V680-D1KP54T

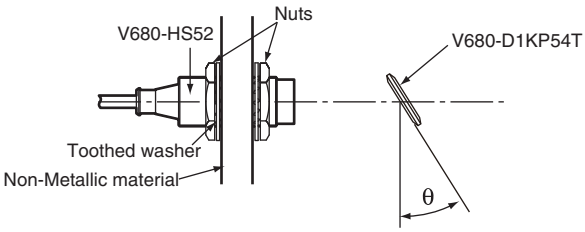

- V680-HS63 and V680-D1KP54T

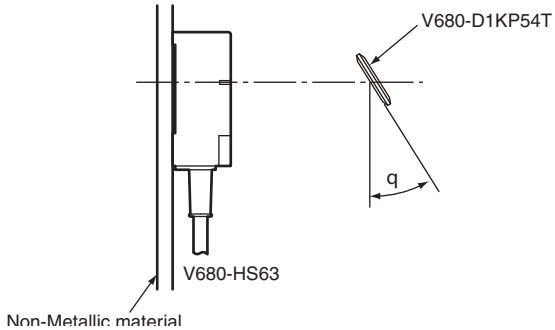

- V680-HS65 and V680-D1KP54T

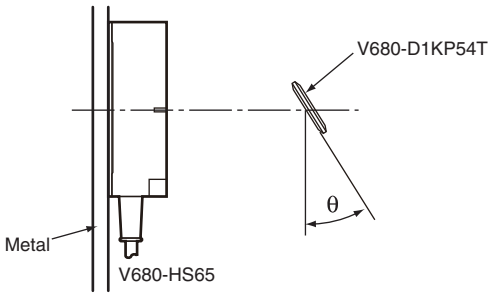

■ V680-D1KP66T

▪ Effect of Metal on Back of RF Tags (Reference)

The V680-D1KP66T communications range is reduced if there is any metal on the back of the RF Tag. If the RF Tag is to be mounted to metallic material, then either use a V600-A86 Attachment (sold separately) or insert a non-metal spacer (such as plastic or resin). The relationship between the distance from the RF Tag to the metal surface and the communications range is shown below. The Attachment is 10 mm thick, and more than one Attachment can be stacked.

V600-A86 Attachment Installation

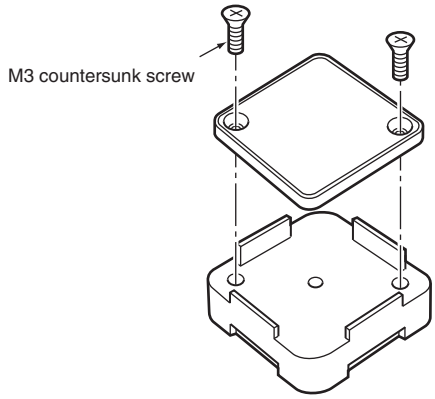

Note: Install so that the mounting holes are aligned.

● V680-HS52 and V680-D1KP66T

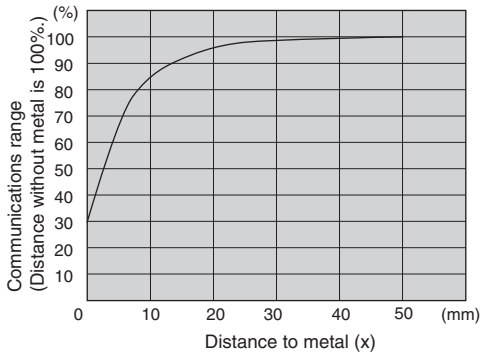

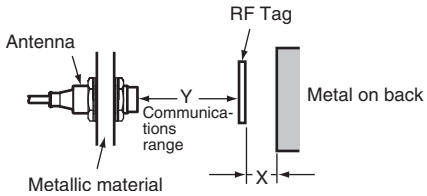

● V680-HS63 and V680-D1KP66T

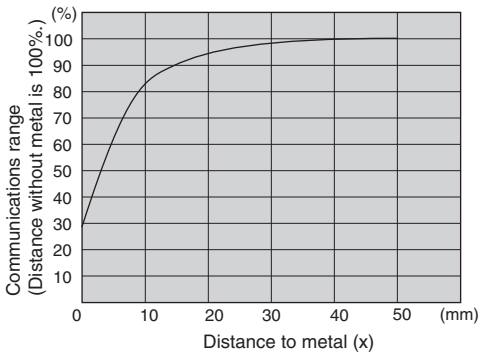

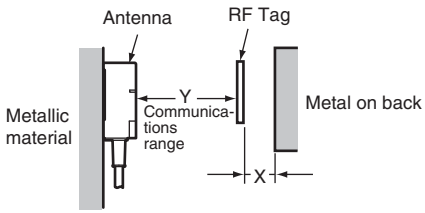

● V680-HS65 and V680-D1KP66T

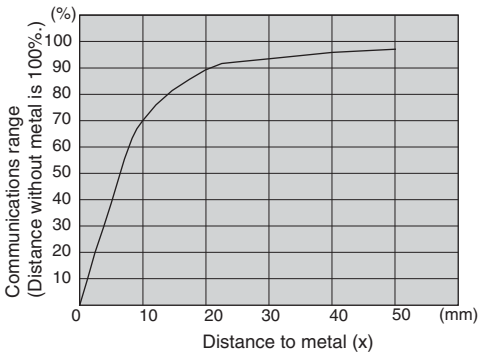

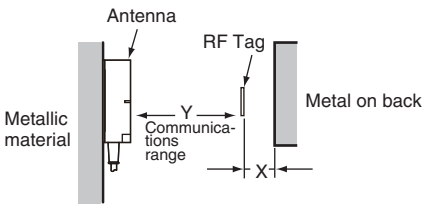

▪ Mutual Interference with RF Tags (Reference)

To prevent malfunctioning due to mutual interference when using more than one RF Tag, leave sufficient space between them as shown in the following diagram.

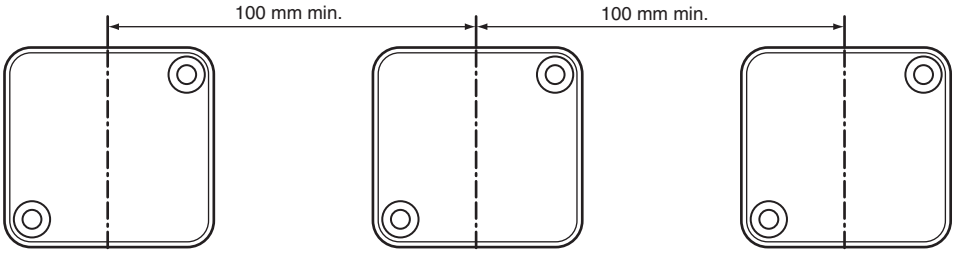

▪ Influence of RF Tag Angle (Reference)

Install Antennas and RF Tags as close to parallel to each other as possible.
Communications are possible even when an Antenna and an RF Tag are mounted at an angle, but the communications range will be shortened. The relation between the angle and the communications range is shown below.

Reduction in Communications Range for V680-D1KP66T Angle

	RF Tag angle (θ°)				
	0	10	20	30	40
V680-HS52 and V680-D1KP66T	0%	–1%	–2%	–4%	–7%
V680-HS63 and V680-D1KP66T	0%	–2%	–3%	–5%	–9%
V680-HS65 and V680-D1KP66T	0%	–1%	–3%	–6%	–11%

Measurement Conditions

● V680-HS52 and V680-D1KP66T

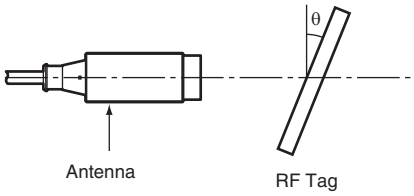

● V680-HS63 and V680-D1KP66T

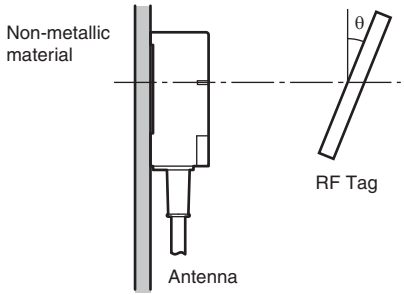

● V680-HS65 and V680-D1KP66T

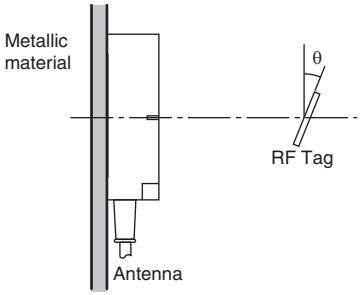

■ V680-D1KP66MT

▪ Effect of Surrounding Metals (Reference)

The V680-D1KP66MT can be surface-mounted or it can be embedded in metal. If it is embedded in metal, the height of the metal casing must not exceed that of the RF Tag.

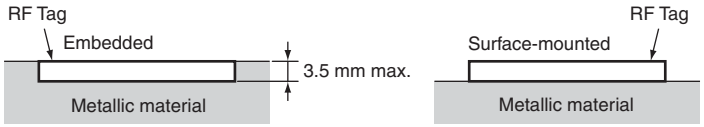

● V680-HS52 and V680-D1KP66MT

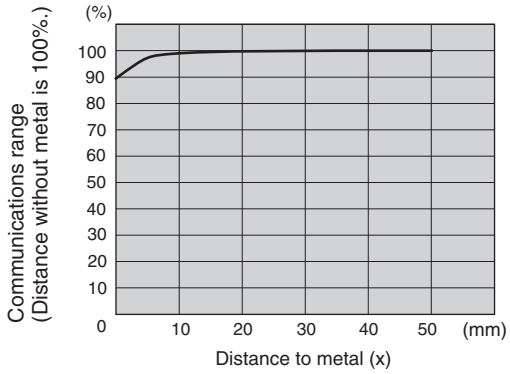

● V680-HS63 and V680-D1KP66MT

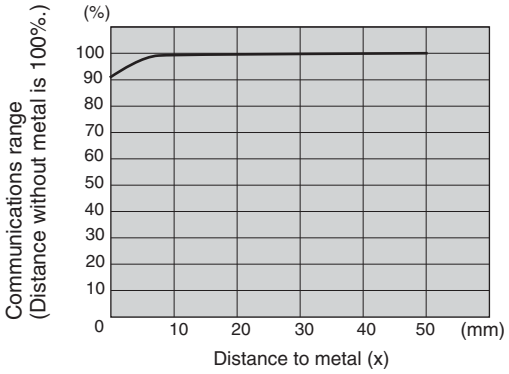

● V680-HS65 and V680-D1KP66MT

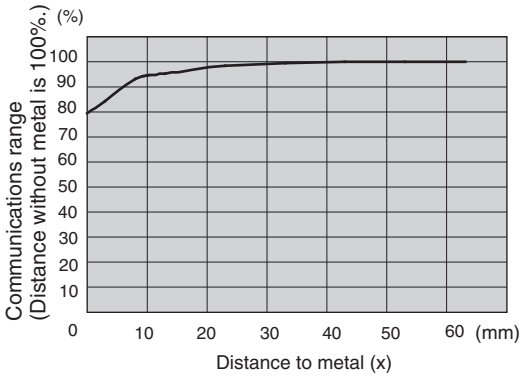

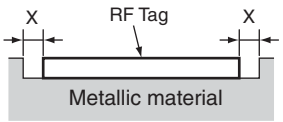

▪ Mutual Interference with RF Tags (Reference)

To prevent malfunctioning due to mutual interference when using more than one RF Tag, leave sufficient space between them as shown in the following diagram.

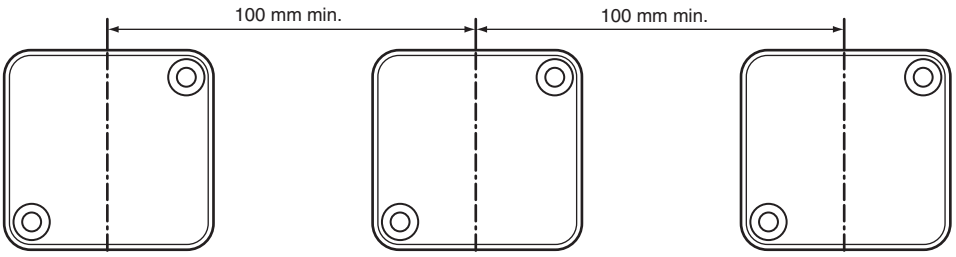

▪ Influence of RF Tag Angle (Reference)

Install Antennas and RF Tags as close to parallel to each other as possible.
Communications are possible even when an Antenna and an RF Tag are mounted at an angle, but the communications range will be shortened. The relation between the angle and the communications range is shown below.

Reduction in Communications Range for V680-D1KP66MT Angle

	RF Tag angle (θ°)				
	0	10	20	30	40
V680-HS52 and V680-D1KP66MT (Metal on back: Steel)	0%	–1%	–2%	–5%	–9%
V680-HS63 and V680-D1KP66MT (Metal on back: Steel)	0%	–1%	–4%	–7%	–13%
V680-HS65 and V680-D1KP66MT (Metal on back: Steel)	0%	–1%	–6%	–15%	---

---: Measurement is not possible because Antenna and RF Tag would strike each other.

Measurement Conditions

- V680-HS52 and V680-D1KP66MT (Metal on back: Steel)

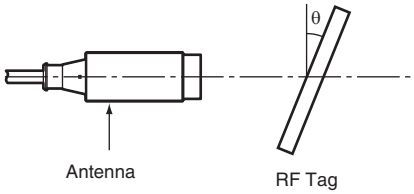

- V680-HS63 and V680-D1KP66MT (Metal on back: Steel)

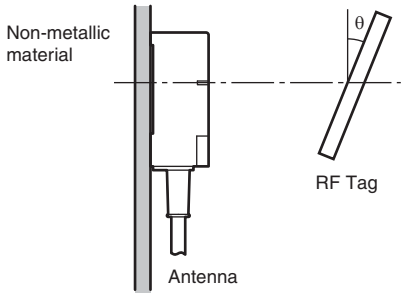

- V680-HS65 and V680-D1KP66MT (Metal on back: Steel)

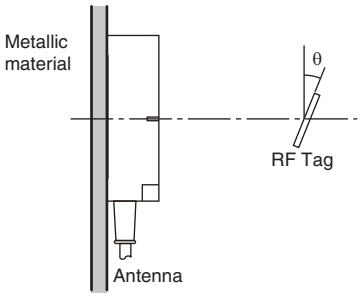

■ V680-D1KP66T-SP

▪ Effect of Metal on Back of RF Tags (Reference)

The V680-D1KP66T-SP communications range is reduced if there is any metallic material on the back of the RF Tag. If the RF Tag is mounted on metallic material, insert a non-metal spacer (such as plastic or resin).

The relationship between the distance from the RF Tag to the metal surface and the communications range is shown below.

● V680-HS52 and V680-D1KP66T-SP

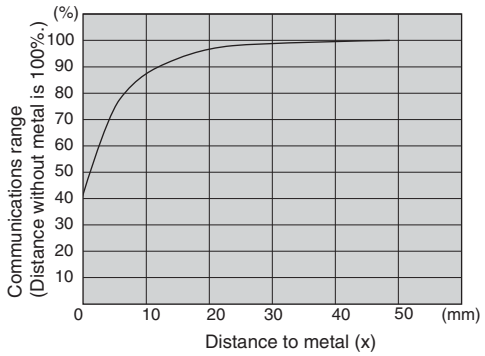

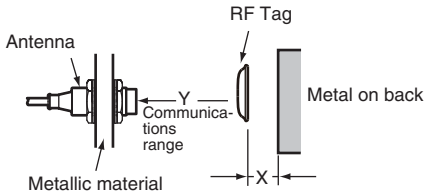

● V680-HS63 and V680-D1KP66T-SP

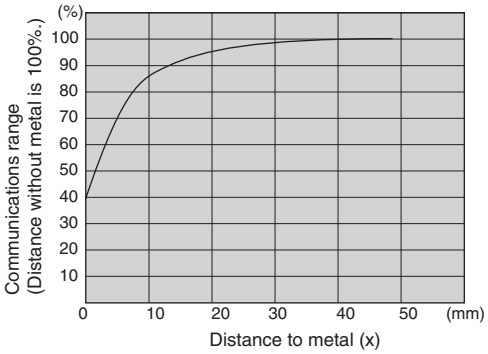

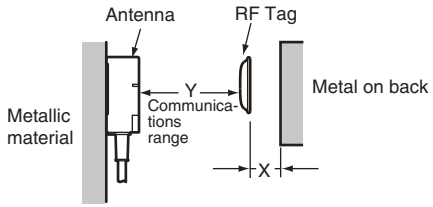

● V680-HS65 and V680-D1KP66T-SP

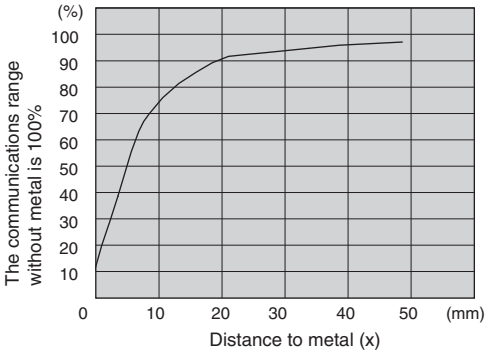

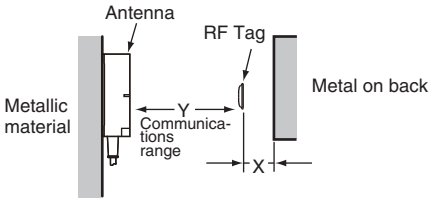

▪ Mutual Interference with RF Tags (Reference)

To prevent malfunctioning due to mutual interference when using more than one RF Tag, leave sufficient space between them as shown in the following diagram.

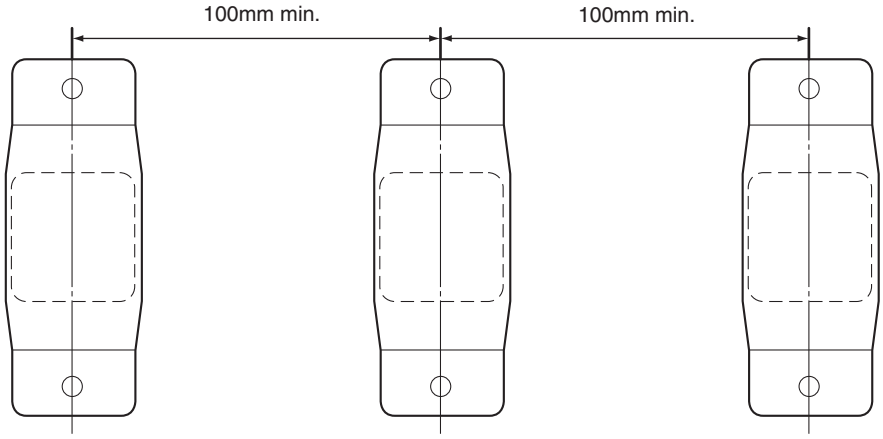

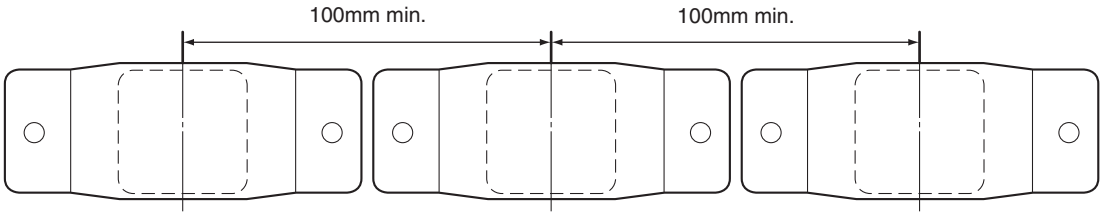

▪ Influence of RF Tag Angle (Reference)

Install Antennas and RF Tags as close to parallel to each other as possible.
Communications are possible even when an Antenna and an RF Tag are mounted at an angle, but the communications range will be shortened. The relation between the angle and the communications range is shown below.

Reduction in Communications Range for V680-D1KP66T-SP Angle

	RF Tag angle (θ°)				
	0	10	20	30	40
V680-HS52 and V680-D1KP66T-SP	0%	–1%	–2%	–4%	–7%
V680-HS63 and V680-D1KP66T-SP	0%	–2%	–3%	–5%	–9%
V680-HS65 and V680-D1KP66T-SP	0%	–1%	–3%	–6%	–11%

Measurement Conditions

● V680-HS52 and V680-D1KP66T-SP

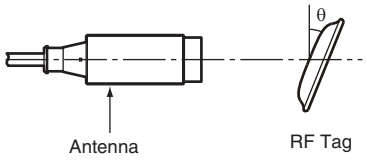

● V680-HS63 and V680-D1KP66T-SP

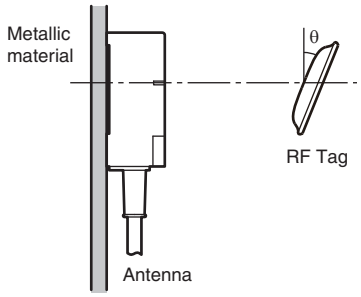

● V680-HS65 and V680-D1KP66T-SP

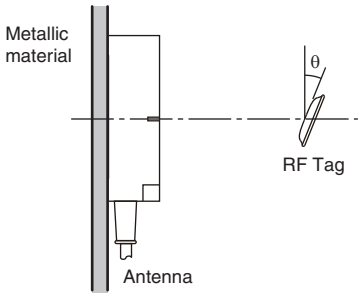

■ V680-D1KP58HTN

▪ Influence of Metal Behind RF Tag (Reference)

Take the influence of metal behind RF Tags into consideration when mounting them.

The communications range is adversely affected if there is any metal material around the RF Tag. The degree of influence depends on the type, size, and shape of the material around the RF Tag. The following graphs show the influence of metal objects behind the RF Tag for reference.

Influence of Metal

The following diagram shows the rate of reduction in the communications range when metal is located behind the RF Tag. The horizontal axis in the diagram indicates the distance between the RF Tag and the metal plate, and the vertical axis indicates the relative communications range at 100% without a metal plate, i.e, the rate of reduction in communications range.

● V680-HS65 and V680-D1KP58HTN

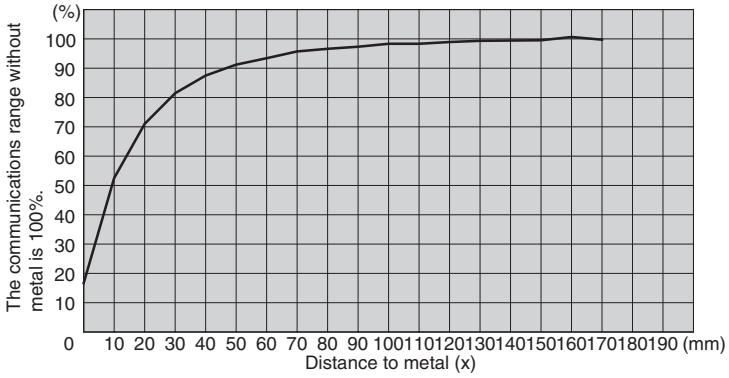

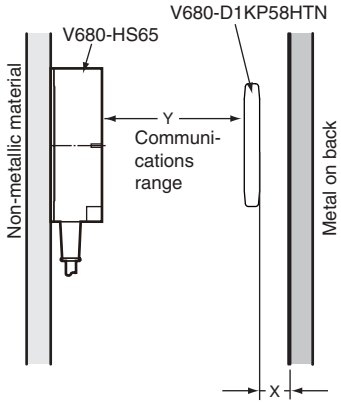

Material: Steel (t = 1.5 mm)

Shape: 295 mm × 295 mm

▪ Mutual Interference with RF Tag (Reference)

Provide the mounting distances indicated below to prevent malfunctions due to mutual interference when using multiple RF Tags.

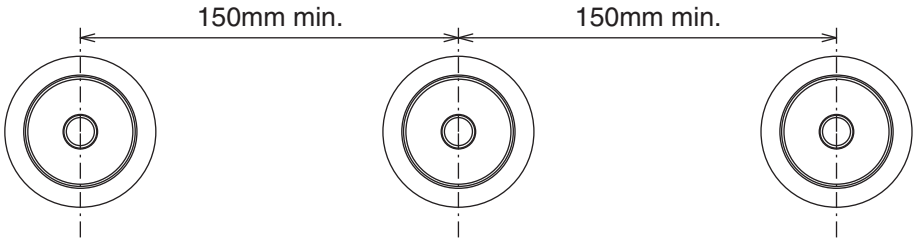

▪ Influence of RF Tag Angle (Reference)

The maximum communications range can be obtained when the Antenna and RF Tag are installed in parallel. When the RF Tag is installed on an angle, the communications range is reduced. Consider the effect of the RF Tag angle when installing the RF Tag. As reference data, the following diagram shows the rate of reduction in communications range according to the RF Tag angle. The horizontal axis indicates the angle when the RF Tag surface and Antenna surface are in parallel at 0°. The vertical axis indicates the relative communications range when the angle is 0° at 100%, i.e., the rate in reduction of the communications range.

▪ Percentage Drop in Communications Range According to Angle of V680-D1KP58HTN

	RF Tag angle (θ°)									
	0	10	20	30	40	50	60	70	80	90
V680-HS65 and V680-D1KP58HTN	0%	0%	-1%	-1%	-2%	-3%	-6%	-11%	-19%	-32%

Measurement Conditions

• V680-HS65 and V680-D1KP58HTN

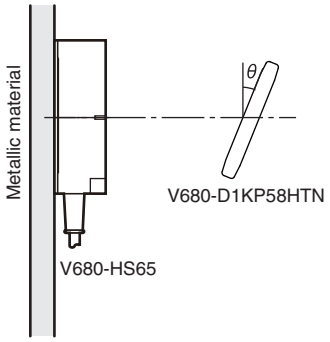

■ V680-D2KF52M

▪ Differences in Surrounding Metals

communications ranges are affected by the type of metal in back of or surrounding the RF Tag, as shown in the following table.

	Steel	SUS	Brass	Aluminum
V680-D2KF52M	100%	80% to 85%	80% to 85%	75% to 80%

Note: The value for steel around or behind the RF Tag is set to 100%.

▪ Mutual Interference with RF Tags (Reference)

To prevent malfunctioning due to mutual interference when using more than one RF Tag, leave sufficient space between them as shown in the following diagram.

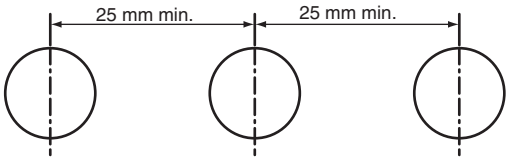

▪ Influence of RF Tag Angle (Reference)

Install Antennas and RF Tags as close to parallel to each other as possible.
Communications are possible even when an Antenna and an RF Tag are mounted at an angle, but the communications range will be shortened. The relation between the angle and the communications range is shown below.

Reduction in Communications Range for V680-D2KF52M Angle

	RF Tag angle (θ°)				
	0	10	20	30	40
V680-HS51 and V680-D2KF52M	0%	–2%	–6%	-–	–22%
V680-HS51 and V680-D2KF52M (Metal on back: Steel)	0%	0%	0%	–7%	–30%
V680-HS52 and V680-D2KF52M	0%	0%	0%	–2%	–5%
V680-HS52 and V680-D2KF52M (Metal on back: Steel)	0%	–2%	–7%	---	---
V680-HS63 and V680-D2KF52M	0%	0%	–1%	–4%	–9%

---: Measurement is not possible because Antenna and RF Tag would strike each other.

Measurement Conditions

● V680-HS51 and V680-D2KF52M

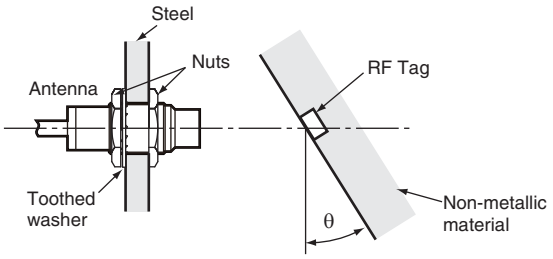

● V680-HS51 and V680-D2KF52M (Metal on back: Steel)

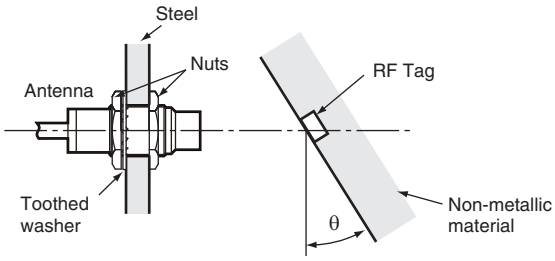

● V680-HS52 and V680-D2KF52M

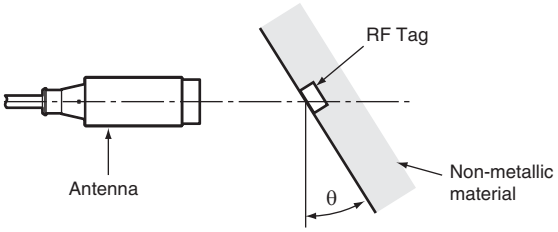

● V680-HS52 and V680-D2KF52M (Metal on back: Steel)

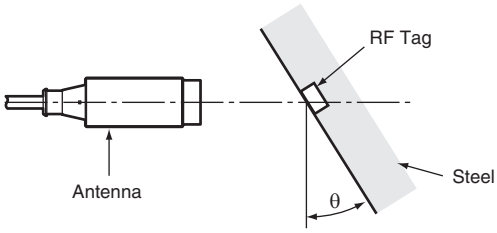

● V680-HS63 and V680-D2KF52M

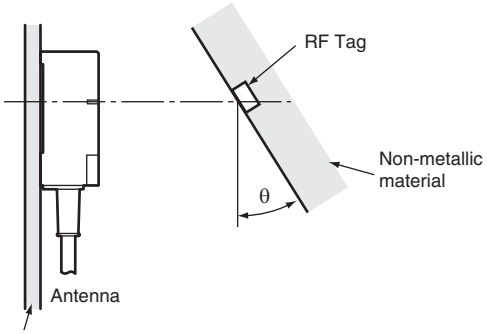

■ V680-D2KF52M-BT01/-D2KF52M-BT11

▪ Mutual Interference with RF Tags (Reference)

To prevent malfunctioning due to mutual interference when using more than one RF Tag, leave sufficient space between them as shown in the following diagram.

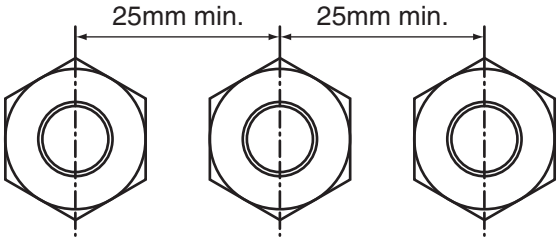

▪ Influence of RF Tag Angle (Reference)

Install Antennas and RF Tags as close to parallel to each other as possible.
Communications are possible even when an Antenna and an RF Tag are mounted at an angle, but the communications range will be shortened. The relation between the angle and the communications range is shown below.

Percentage of Change in Communications Range for 680-D2KF52M-BT01/-D2KF52M-BT11 Angle

	RF Tag angle (θ°)				
	0	10	20	30	40
V680-HS51 and V680-D2KF52M-BT01/-D2KF52M-BT11	0%	–32%	–50%	---	---
V680-HS52 and V680-D2KF52M-BT01/-D2KF52M-BT11	0%	–32%	–42%	---	---

---: Measurement is not possible because Antenna and RF Tag would strike each other.

Measurement Conditions

● V680-HS51
and V680-D2KF52M-BT01/-D2KF52M-BT11

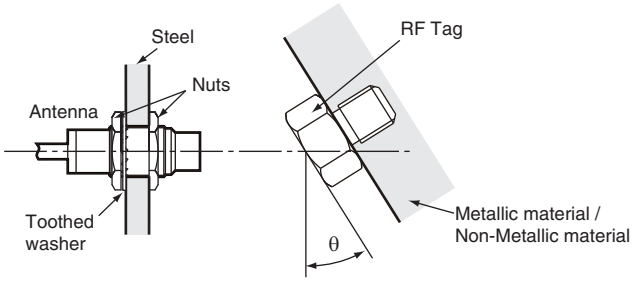

● V680-HS52
and V680-D2KF52M-BT01/-D2KF52M-BT11

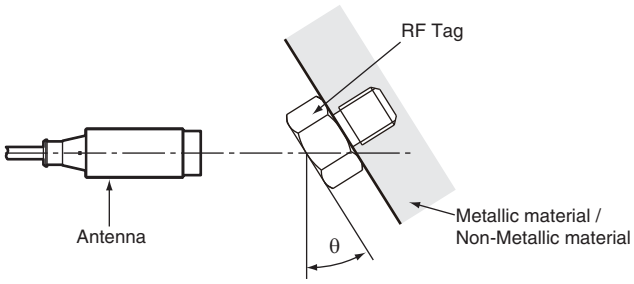

■ V680-D8KF67

▪ Effect of Metal on Back of RF Tags (Reference)

The V680-D8KF67 communications range is reduced if there is any metallic material on the back of the RF Tag.

● V680-HS52 and V680-D8KF67

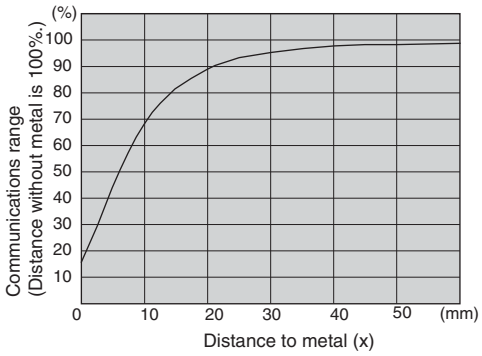

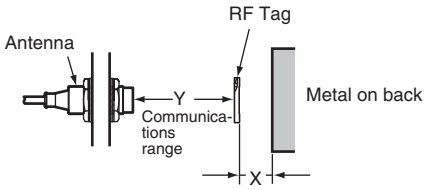

● V680-HS63 and V680-D8KF67

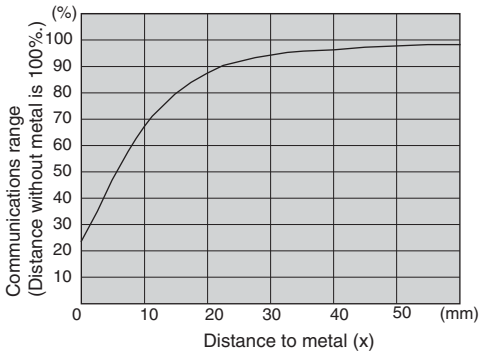

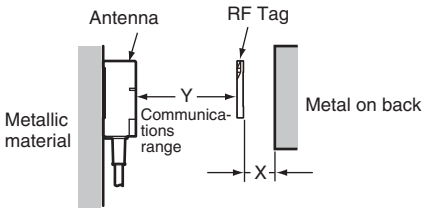

● V680-HS65 and V680-D8KF67

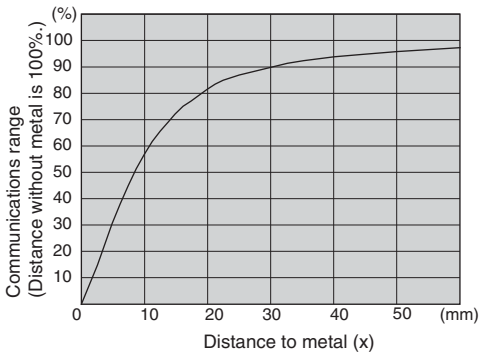

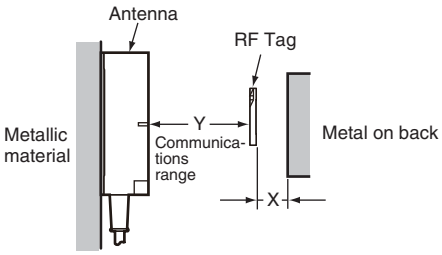

▪ Mutual Interference with RF Tags (Reference)

To prevent malfunctioning due to mutual interference when using more than one RF Tag, leave sufficient space between them as shown in the following diagram.

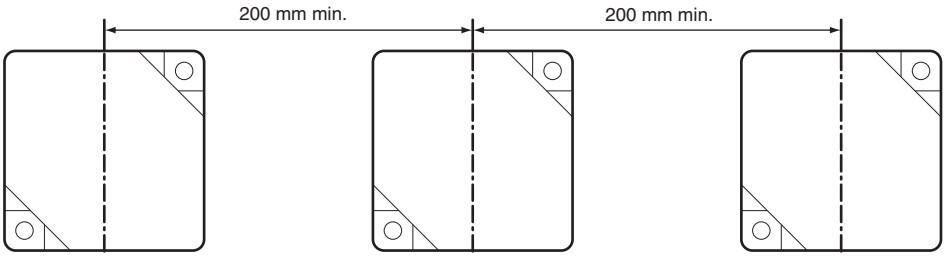

▪ Influence of RF Tag Angle (Reference)

Install Antennas and RF Tags as close to parallel to each other as possible.
Communications are possible even when an Antenna and an RF Tag are mounted at an angle, but the communications range will be shortened. The relation between the angle and the communications range is shown below.

Reduction in Communications Range for V680-D8KF67 Angle

	RF Tag angle (θ°)				
	0	10	20	30	40
V680-HS52 and V680-D8KF67	0%	-1%	-1%	–1%	–1%
V680-HS63 and V680-D8KF67	0%	–1%	–1%	–2%	–4%
V680-HS65 and V680-D8KF67	0%	–1%	–2%	–5%	–9%

Measurement Conditions

● V680-HS52 and V680-D8KF67

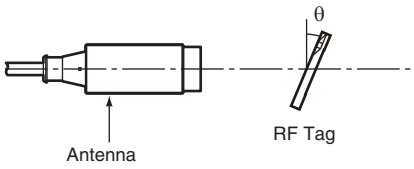

● V680-HS63 and V680-D8KF67

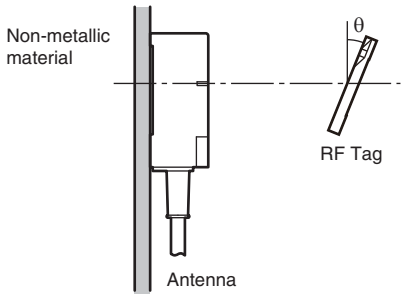

● V680-HS65 and V680-D8KF67

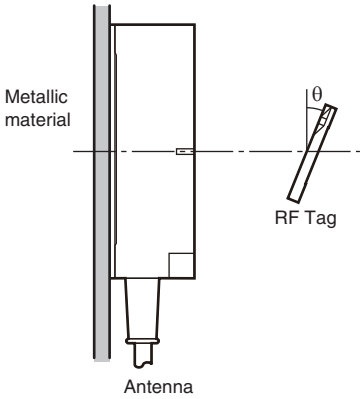

■ V680-D8KF67M

▪ Effect of Surrounding Metals (Reference)

The V680-D8KF67M can be surface-mounted or it can be embedded in metal. If it is embedded in metal, the height of the metal casing must not exceed that of the RF Tag.

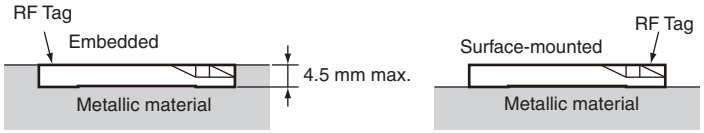

● V680-HS52 and V680-D8KF67M

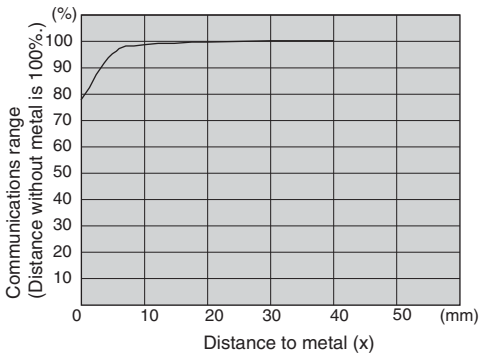

● V680-HS63 and V680-D8KF67M

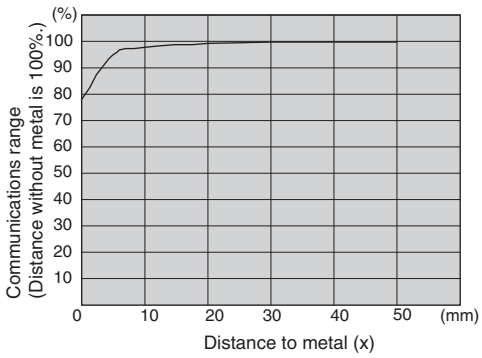

● V680-HS65 and V680-D8KF67M

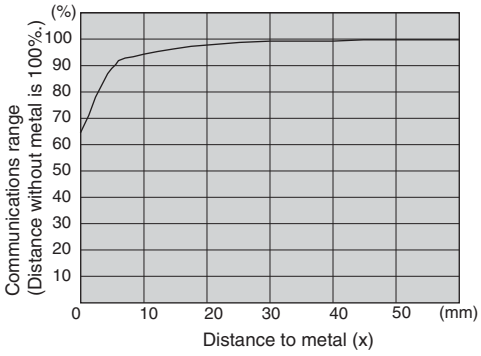

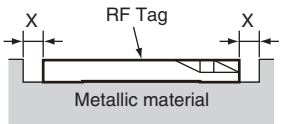

▪ Mutual Interference with RF Tags (Reference)

To prevent malfunctioning due to mutual interference when using more than one RF Tag, leave sufficient space between them as shown in the following diagram.

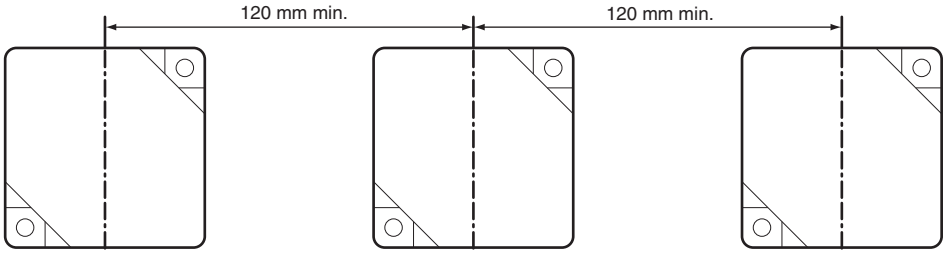

▪ Influence of RF Tag Angle (Reference)

Install Antennas and RF Tags as close to parallel to each other as possible.
Communications are possible even when an Antenna and an RF Tag are mounted at an angle, but the communications range will be shortened. The relation between the angle and the communications range is shown below.

Reduction in Communications Range for V680-D8KF67M Angle

	RF Tag angle (θ°)				
	0	10	20	30	40
V680-HS52 and V680-D8KF67M (Metal on back: Steel)	0%	0%	0%	0%	0%
V680-HS63 and V680-D8KF67M (Metal on back: Steel)	0%	0%	–1%	–2%	–5%
V680-HS65 and V680-D8KF67M (Metal on back: Steel)	0%	–1%	–3%	–9%	–19%

Measurement Conditions

● V680-HS52 and V680-D8KF67M
(Metal on back: Steel)

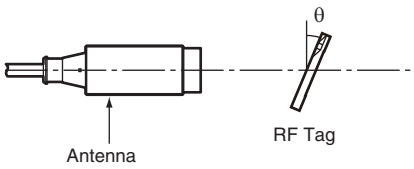

● V680-HS63 and V680-D8KF67M
(Metal on back: Steel)

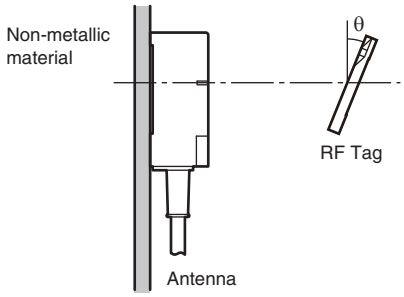

● V680-HS65 and V680-D8KF67M
(Metal on back: Steel)

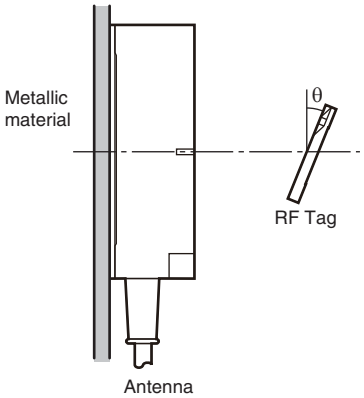

■ V680-D8KF68/-D32KF68

▪ Effect of Surrounding Metals (Reference)

• Special Attachment (V680-A81) Installation Direction

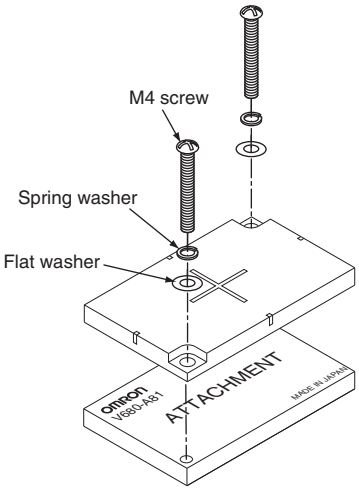

The communications distance will be reduced if there is metal on the back of an ID Tag. When mounting on a metal surface, use the V680-A81 special Attachment (sold separately) or insert a non-metallic spacer (e.g., plastic, resin, etc.).

● V680-HS63 and V680-D8KF68/-D32KF68

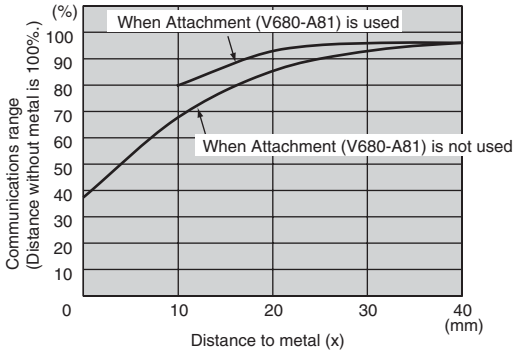

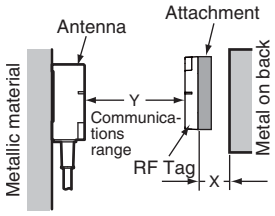

● V680-HS65 and V680-D8KF68/-D32KF68

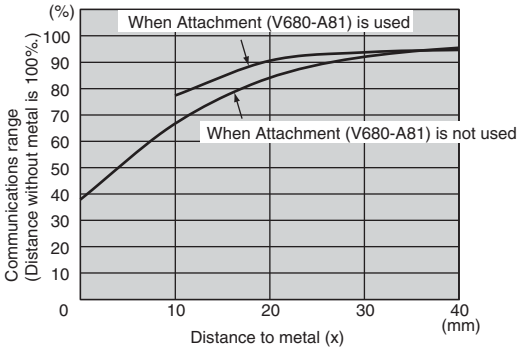

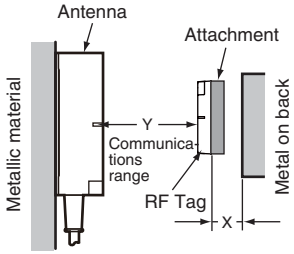

▪ Mutual Interference with RF Tags (Reference)

To prevent malfunctioning due to mutual interference when using more than one RF Tag, leave sufficient space between them as shown in the following diagram.

When V680-HS63 Is Used

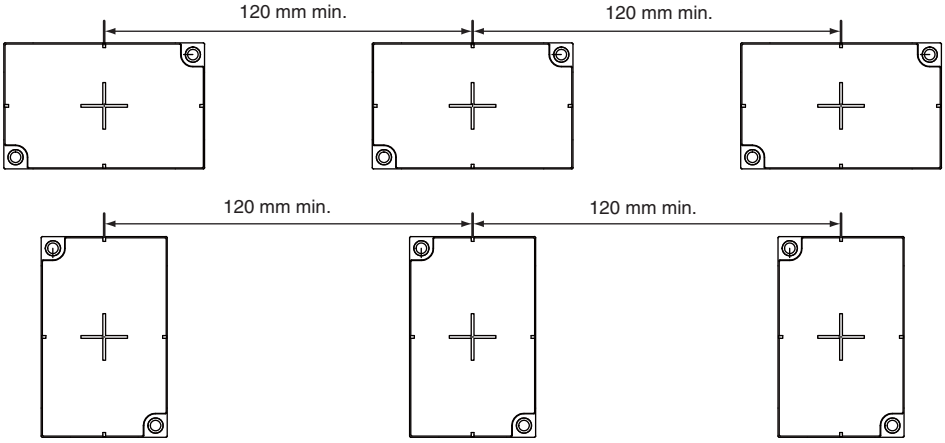

When V680-HS65 Is Used

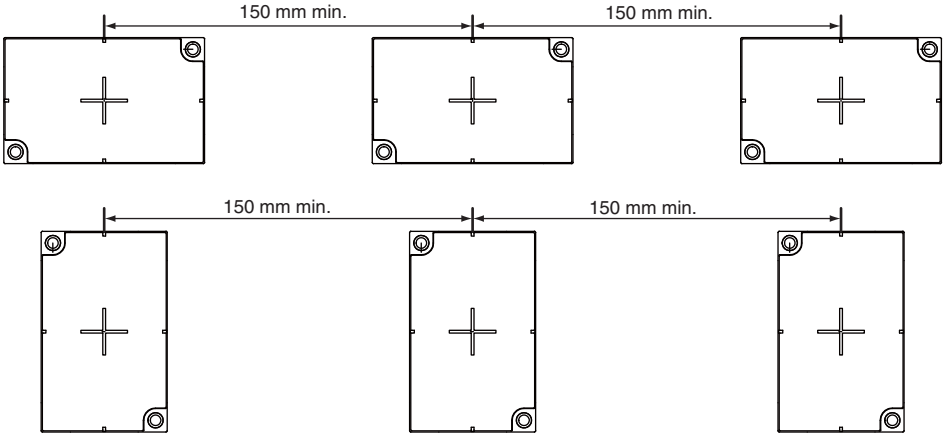

▪ Influence of RF Tag Angle (Reference)

Install Antennas and RF Tags as close to parallel to each other as possible.
Communications are possible even when an Antenna and an RF Tag are mounted at an angle, but the communications range will be shortened. The relation between the angle and the communications range is shown below.

Reduction in Communications Range for V680-D8KF68/-D32KF68 Angle

	RF Tag angle (θ°)				
	0	10	20	30	40
V680-HS63 and V680-D8KF68/-D32KF68 (Horizontal-facing RF Tag)	0%	0%	0%	0%	0%
V680-HS63 and V680-D8KF68/-D32KF68 (Vertical-facing RF Tag)	0%	–1%	–2%	–3%	–5%
V680-HS65 and V680-D8KF68/-D32KF68 (Horizontal-facing RF Tag)	0%	–1%	–2%	–4%	–6%
V680-HS65 and V680-D8KF68/-D32KF68 (Vertical-facing RF Tag)	0%	–1%	–3%	–6%	–10%

Measurement Conditions

● V680-HS63 and V680-D8KF68/-D32KF68 (Horizontal-facing RF Tag)

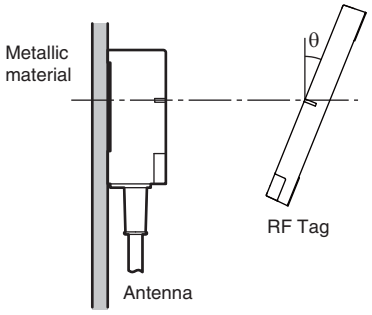

● V680-HS63 and V680-D8KF68/-D32KF68 (Vertical-facing RF Tag)

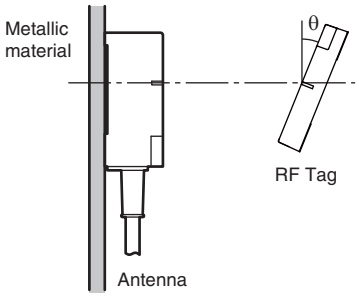

● V680-HS65 and V680-D8KF68/-D32KF68 (Horizontal-facing RF Tag)

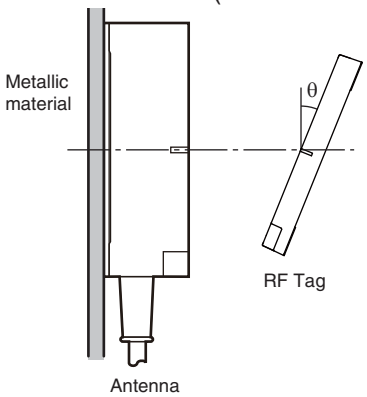

● V680-HS65 and V680-D8KF68/-D32KF68 (Vertical-facing RF Tag)

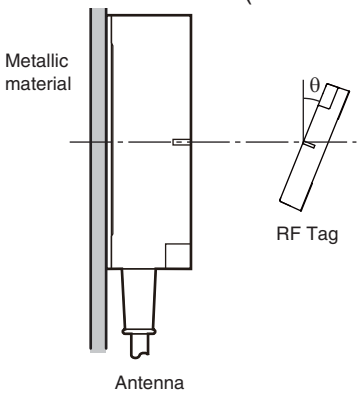

■ V680S-D2KF67

▪ Effect of Metal on Back of RF Tags (Reference)

The V680S-D2KF67 communications range is reduced if there is any metallic material on the back of the RF Tag.

● V680-HS52 and V680S-D2KF67

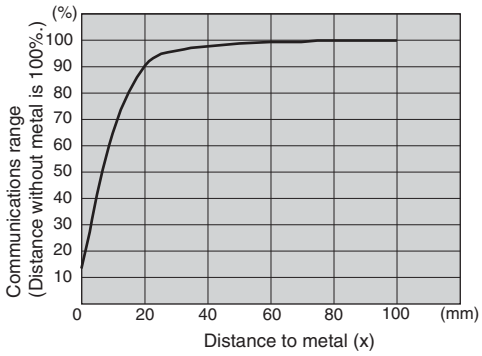

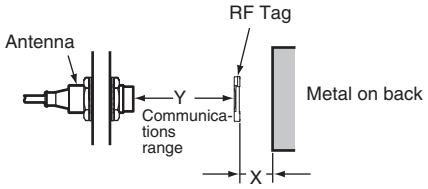

● V680-HS63 and V680S-D2KF67

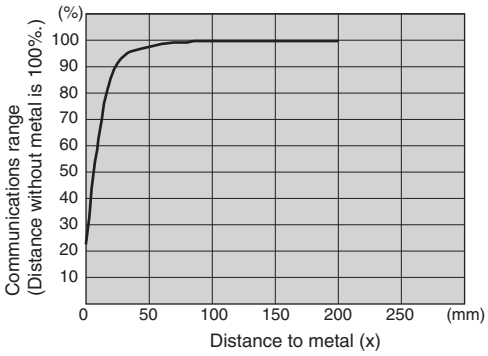

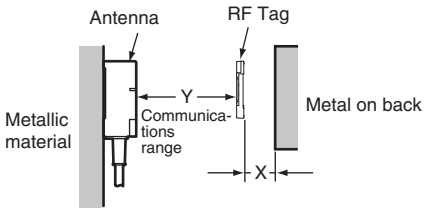

● V680-HS65 and V680S-D2KF67

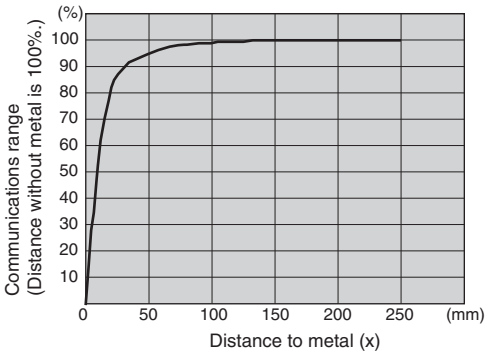

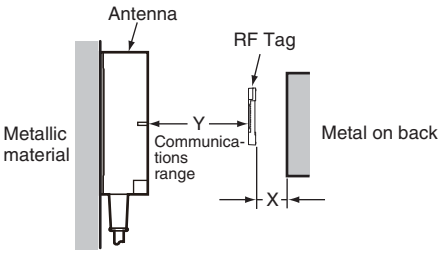

▪ Mutual Interference with RF Tags (Reference)

To prevent malfunctioning due to mutual interference when using more than one RF Tag, leave sufficient space between them as shown in the following diagram.

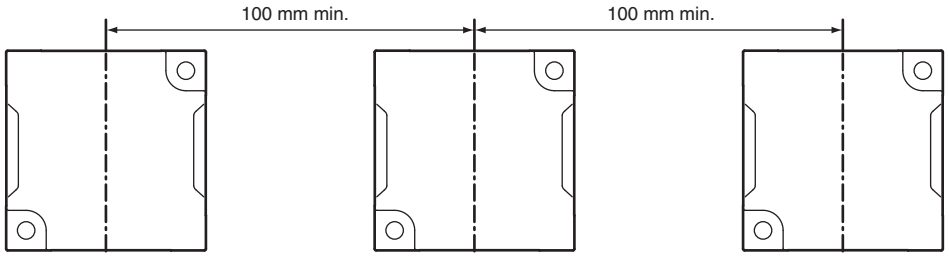

▪ Influence of RF Tag Angle (Reference)

Install Antennas and RF Tags as close to parallel to each other as possible.
Communications are possible even when an Antenna and an RF Tag are mounted at an angle, but the communications range will be shortened. The relation between the angle and the communications range is shown below.

Reduction in Communications Range for V680S-D2KF67 Angle

	RF Tag angle (θ°)									
	0	10	20	30	40	50	60	70	80	90
V680-HS52 and V680S-D2KF67	0%	-1%	-2%	-3%	-5%	-9%	-15%	-24%	---	---
V680-HS63 and V680S-D2KF67	0%	-1%	-2%	-4%	-7%	-12%	-18%	---	---	---
V680-HS65 and V680S-D2KF67	0%	-1%	-2%	-4%	-7%	-12%	-19%	-29%	-45%	---

Measurement Conditions

● V680-HS52 and V680S-D2KF67

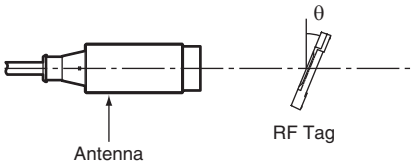

● V680-HS63 and V680S-D2KF67

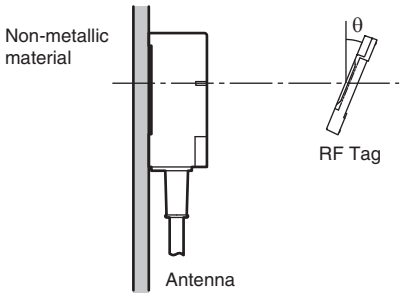

● V680-HS65 and V680S-D2KF67

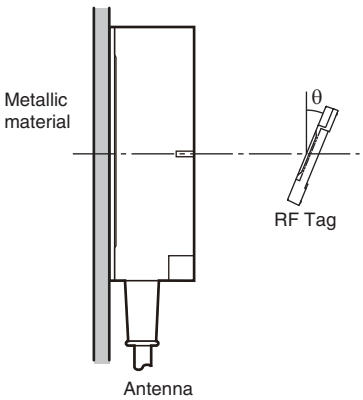

■ V680S-D2KF67M

▪ Effect of Surrounding Metals (Reference)

The V680S-D2KF67M can be surface-mounted or it can be embedded in metal. If it is embedded in metal, the height of the metal casing must not exceed that of the RF Tag.

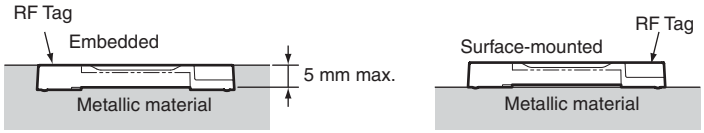

● V680-HS52 and V680S-D2KF67M

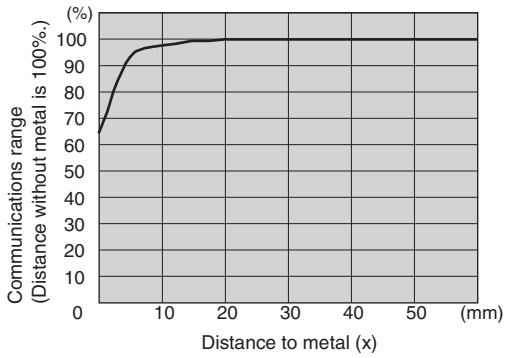

● V680-HS63 and V680S-D2KF67M

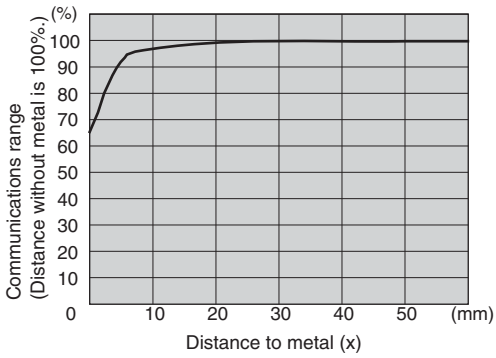

● V680-HS65 and V680S-D2KF67M

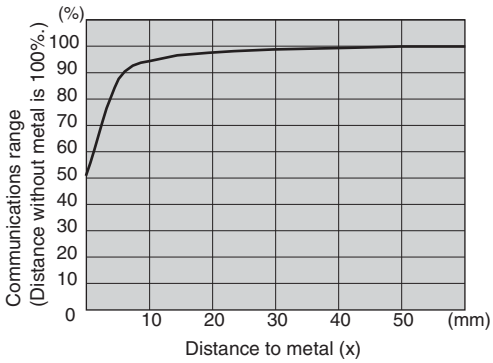

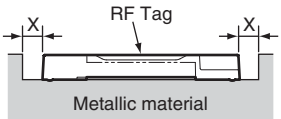

▪ Mutual Interference with RF Tags (Reference)

To prevent malfunctioning due to mutual interference when using more than one RF Tag, leave sufficient space between them as shown in the following diagram.

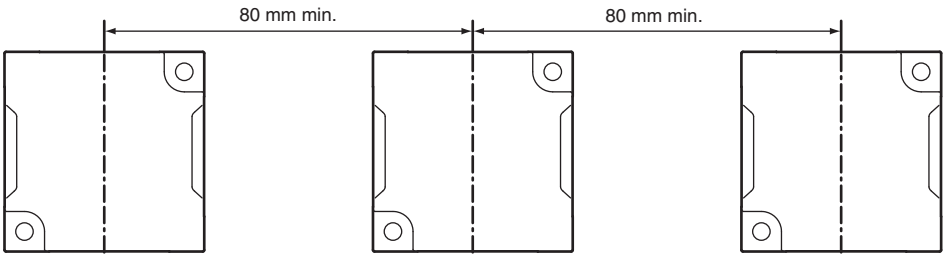

▪ Influence of RF Tag Angle (Reference)

Install Antennas and RF Tags as close to parallel to each other as possible.
Communications are possible even when an Antenna and an RF Tag are mounted at an angle, but the communications range will be shortened. The relation between the angle and the communications range is shown below.

Reduction in Communications Range for V680S-D2KF67M Angle

	RF Tag angle (θ°)									
	0	10	20	30	40	50	60	70	80	90
V680-HS52 and V680S-D2KF67M (Metal on back: Steel)	0%	-1%	-2%	-4%	-6%	-11%	---	---	---	---
V680-HS63 and V680S-D2KF67M (Metal on back: Steel)	0%	-1%	-3%	-7%	-12%	-18%	-29%	-50%	---	---
V680-HS65 and V680S-D2KF67M (Metal on back: Steel)	0%	-2%	-5%	11%	-21%	-36%	---	---	---	---

Measurement Conditions

● V680-HS52 and V680S-D2KF67M
(Metal on back: Steel)

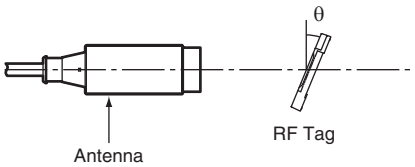

● V680-HS63 and V680S-D2KF67M
(Metal on back: Steel)

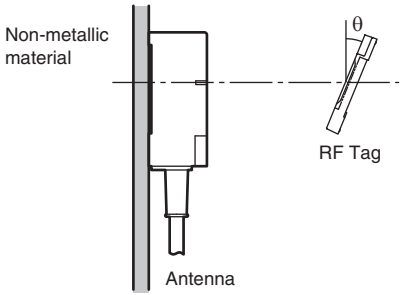

● V680-HS65 and V680S-D2KF67M
(Metal on back: Steel)

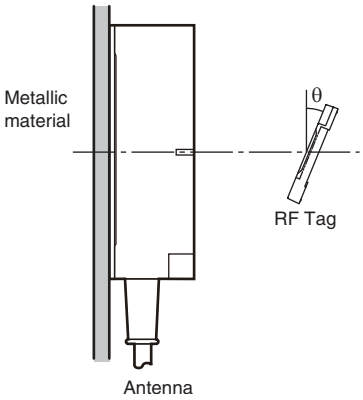

■ V680S-D2KF68

▪ Effect of Metal on Back of RF Tags (Reference)

The V680S-D2KF68 communications range is reduced if there is any metallic material on the back of the RF Tag.

● V680-HS63 and V680S-D2KF68

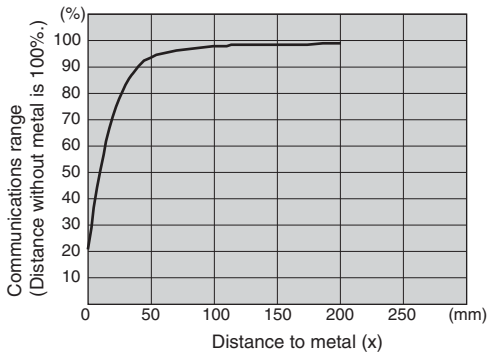

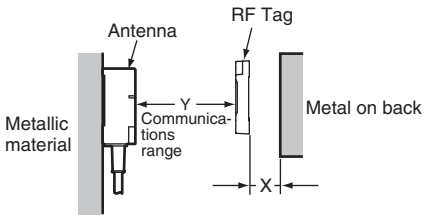

● V680-HS65 and V680S-D2KF68

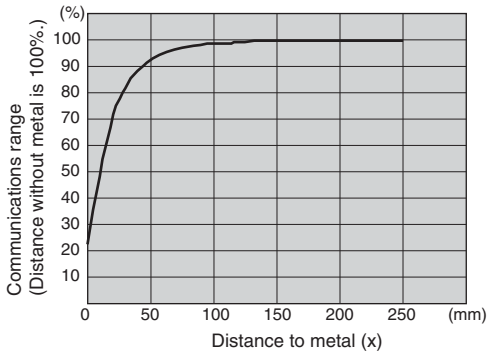

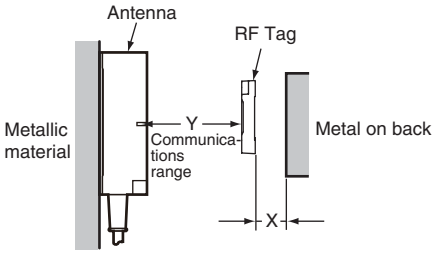

▪ Mutual Interference with RF Tags (Reference)

To prevent malfunctioning due to mutual interference when using more than one RF Tag, leave sufficient space between them as shown in the following diagram.

When V680-HS63 Is Used

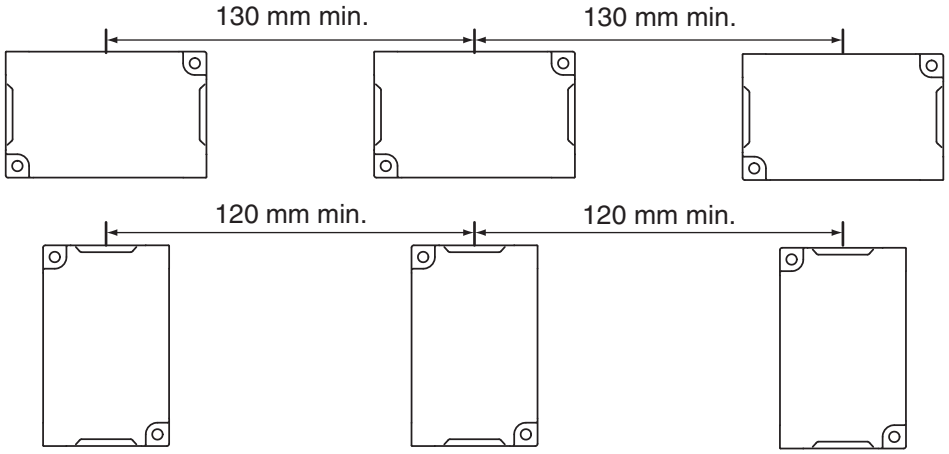

When V680-HS65 Is Used

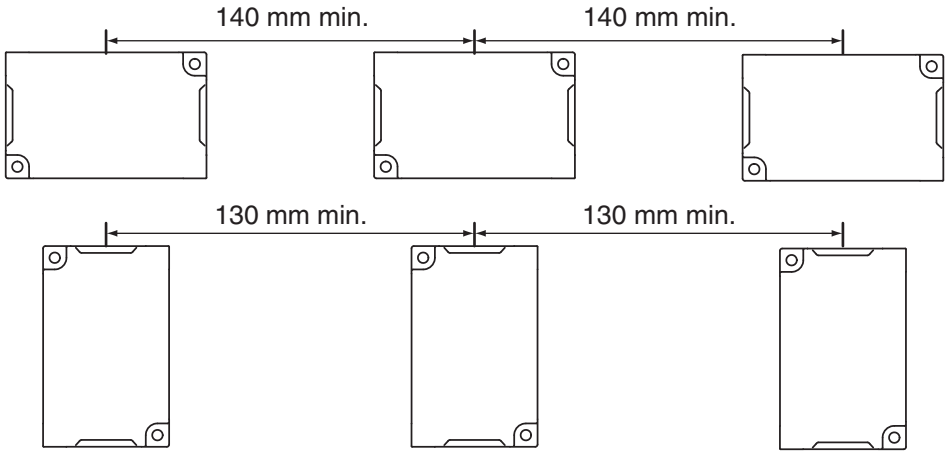

▪ Influence of RF Tag Angle (Reference)

Install Antennas and RF Tags as close to parallel to each other as possible.
Communications are possible even when an Antenna and an RF Tag are mounted at an angle, but the communications range will be shortened. The relation between the angle and the communications range is shown below.

Reduction in Communications Range for V680S-D2KF68 Angle

	RF Tag angle (θ°)									
	0	10	20	30	40	50	60	70	80	90
V680-HS63 and V680S-D2KF68 (Horizontal-facing RF Tag)	0%	-1%	-1%	-1%	-1%	-1%	-3%	-8%	-16%	---
V680-HS63 and V680S-D2KF68 (Vertical-facing RF Tag)	0%	-1%	-2%	-4%	-7%	-11%	-17%	-25%	-37%	-58%
V680-HS65 and V680S-D2KF68 (Horizontal-facing RF Tag)	0%	-1%	-2%	-3%	-6%	-9%	-15%	-22%	-35%	-60%
V680-HS65 and V680S-D2KF68 (Vertical-facing RF Tag)	0%	-1%	-3%	-5%	-9%	-13%	-20%	-29%	-44%	-72%

Measurement Conditions

● V680-HS63 and V680S-D2KF68 (Horizontal-facing RF Tag)

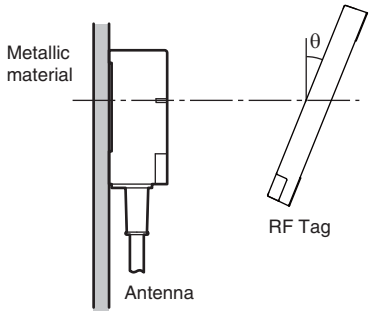

● V680-HS63 and V680S-D2KF68 (Vertical-facing RF Tag)

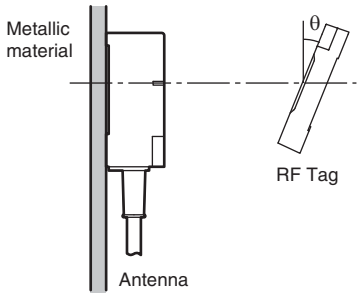

● V680-HS65 and V680S-D2KF68 (Horizontal-facing RF Tag)

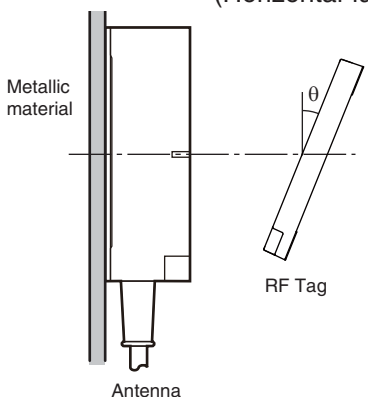

● V680-HS65 and V680S-D2KF68 (Vertical-facing RF Tag)

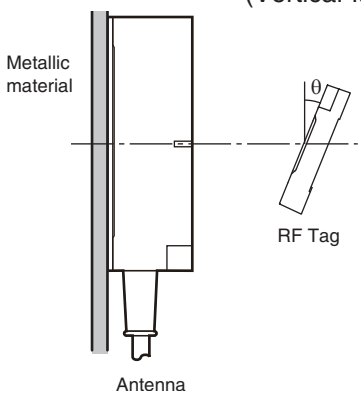

■ V680S-D2KF68M

▪ Effect of Surrounding Metals (Reference)

The V680S-D2KF68M can be surface-mounted or it can be embedded in metal. If it is embedded in metal, the height of the metal casing must not exceed that of the RF Tag.

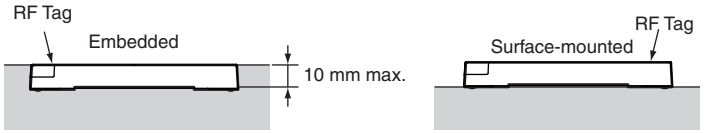

● V680-HS63 and V680S-D2KF68M

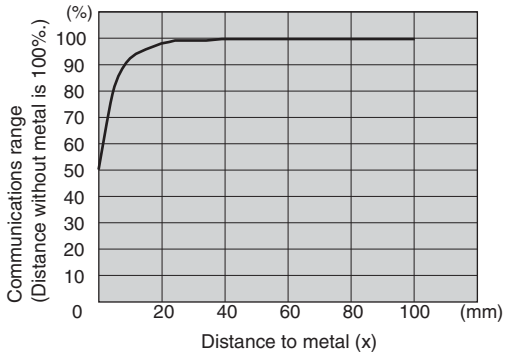

● V680-HS65 and V680S-D2KF68M

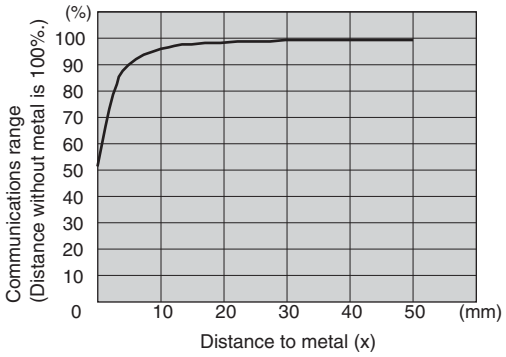

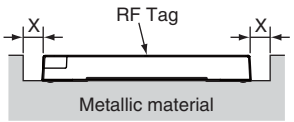

▪ Mutual Interference with RF Tags (Reference)

To prevent malfunctioning due to mutual interference when using more than one RF Tag, leave sufficient space between them as shown in the following diagram.

When V680-HS63 Is Used

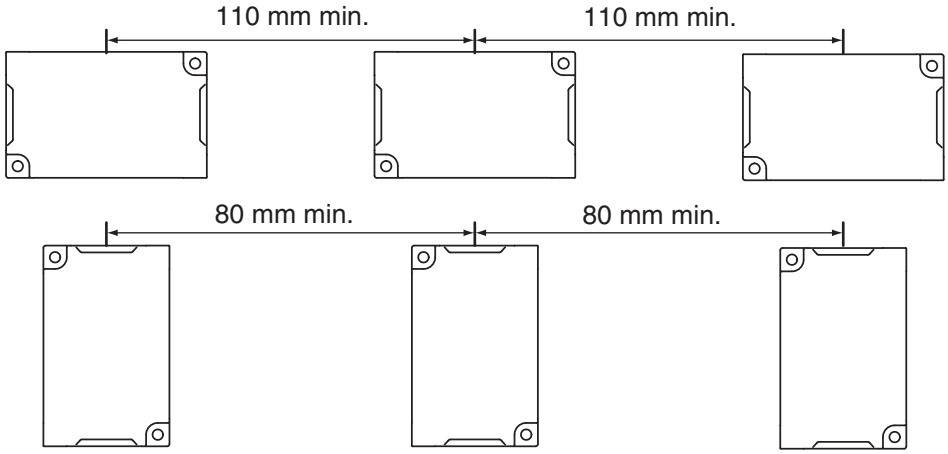

When V680-HS65 Is Used

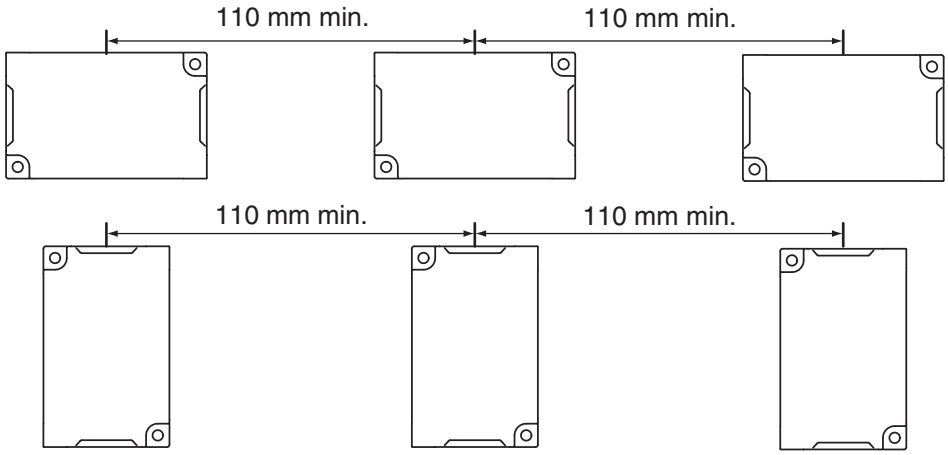

▪ Influence of RF Tag Angle (Reference)

Install Antennas and RF Tags as close to parallel to each other as possible.
Communications are possible even when an Antenna and an RF Tag are mounted at an angle, but the communications range will be shortened. The relation between the angle and the communications range is shown below.

Reduction in Communications Range for V680S-D2KF68M Angle

	RF Tag angle (θ°)									
	0	10	20	30	40	50	60	70	80	90
V680-HS63 and V680S-D2KF68M(Horizontal-facing RF Tag) (Metal on back: Steel)	0%	0%	0%	0%	0%	0%	0%	-5%	-14%	---
V680-HS63 and V680S-D2KF68M(Vertical-facing RF Tag) (Metal on back: Steel)	0%	-1%	-2%	-5%	-8%	-14%	-23%	-36%	---	---
V680-HS65 and V680S-D2KF68M(Horizontal-facing RF Tag) (Metal on back: Steel)	0%	-1%	-2%	-4%	-7%	-12%	-21%	-41%	---	---
V680-HS65 and V680S-D2KF68M(Vertical-facing RF Tag) (Metal on back: Steel)	0%	-1%	-3%	-6%	-12%	-20%	-32%	-59%	-65%	---

Measurement Conditions

● V680-HS63 and V680S-D2KF68(Horizontal-facing RF Tag) (Metal on back: Steel)

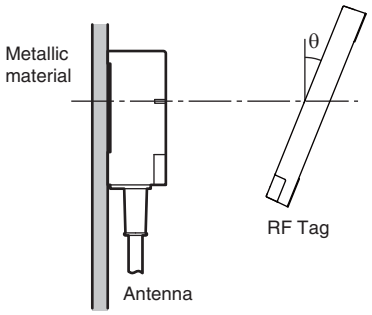

● V680-HS63 and V680S-D2KF68(Vertical-facing RF Tag) (Metal on back: Steel)

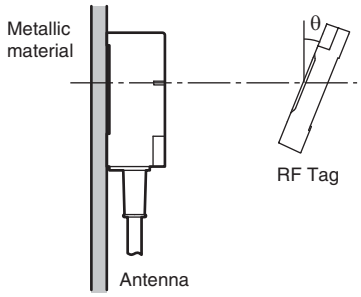

● V680-HS65 and V680S-D2KF68(Horizontal-facing RF Tag) (Metal on back: Steel)

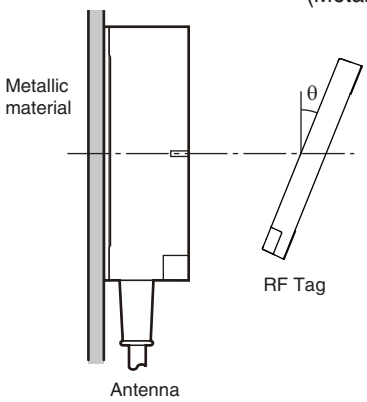

● V680-HS65 and V680S-D2KF68(Vertical-facing RF Tag) (Metal on back: Steel)

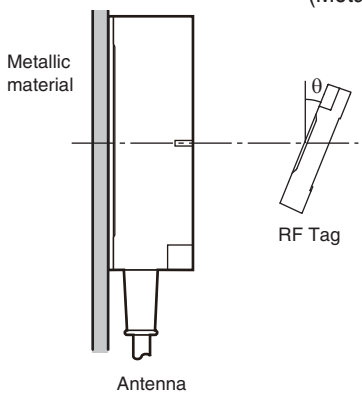

■ V680S-D8KF67

▪ Effect of Metal on Back of RF Tags (Reference)

The V680S-D8KF67 communications range is reduced if there is any metallic material on the back of the RF Tag.

● V680-HS52 and V680S-D8KF67

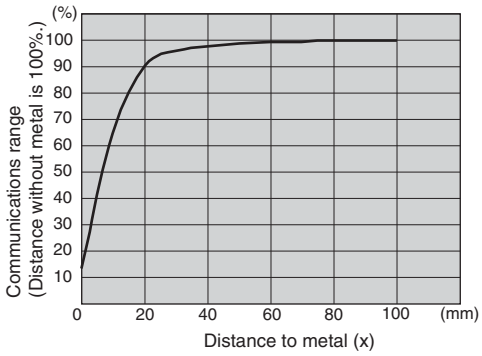

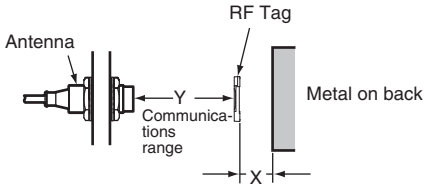

● V680-HS63 and V680S-D8KF67

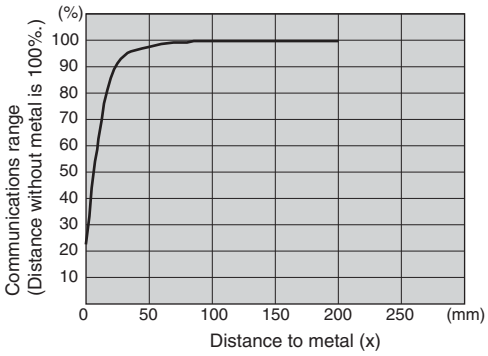

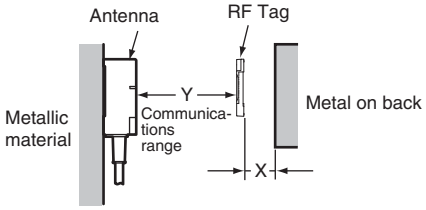

● V680-HS65 and V680S-D8KF67

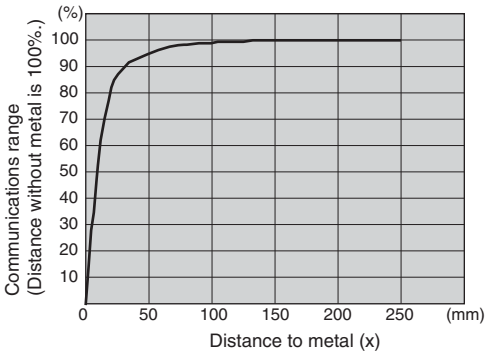

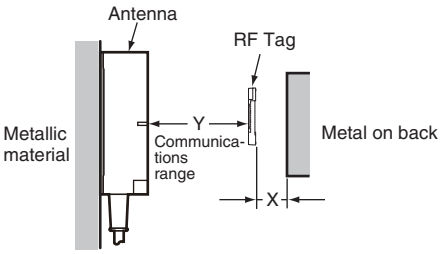

▪ Mutual Interference with RF Tags (Reference)

To prevent malfunctioning due to mutual interference when using more than one RF Tag, leave sufficient space between them as shown in the following diagram.

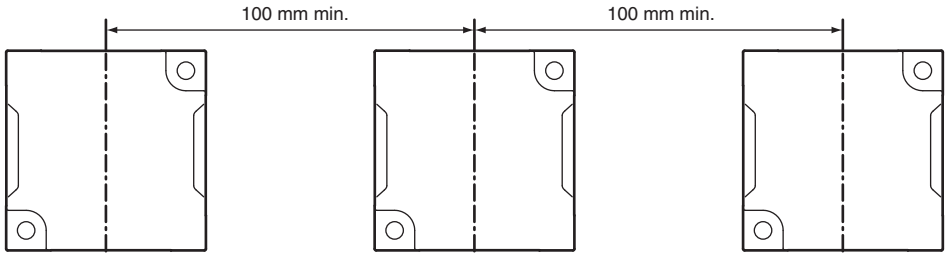

▪ Influence of RF Tag Angle (Reference)

Install Antennas and RF Tags as close to parallel to each other as possible.
Communications are possible even when an Antenna and an RF Tag are mounted at an angle, but the communications range will be shortened. The relation between the angle and the communications range is shown below.

Reduction in Communications Range for V680S-D8KF67 Angle

	RF Tag angle (θ°)									
	0	10	20	30	40	50	60	70	80	90
V680-HS52 and V680S-D8KF67	0%	-1%	-2%	-3%	-5%	-9%	-15%	-24%	---	---
V680-HS63 and V680S-D8KF67	0%	-1%	-2%	-4%	-7%	-12%	-18%	---	---	---
V680-HS65 and V680S-D8KF67	0%	-1%	-2%	-4%	-7%	-12%	-19%	-29%	-45%	---

Measurement Conditions

● V680-HS52 and V680S-D8KF67

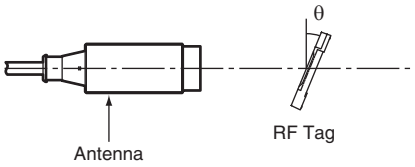

● V680-HS63 and V680S-D8KF67

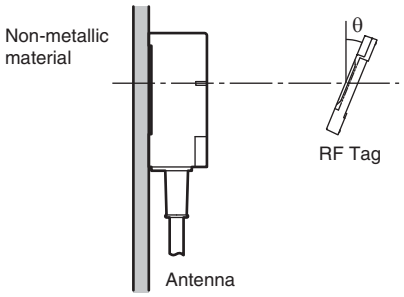

● V680-HS65 and V680S-D8KF67

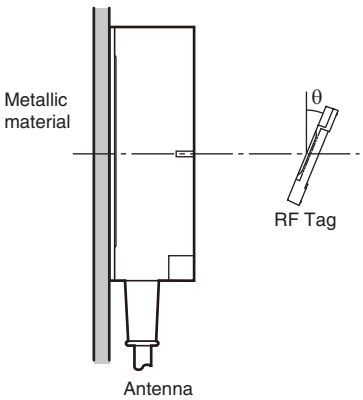

■ V680S-D8KF67M

▪ Effect of Surrounding Metals (Reference)

The V680S-D8KF67M can be surface-mounted or it can be embedded in metal. If it is embedded in metal, the height of the metal casing must not exceed that of the RF Tag.

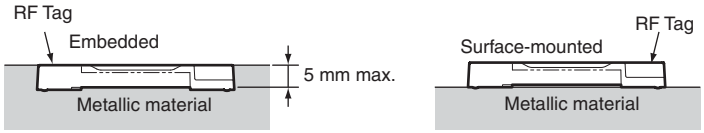

● V680-HS52 and V680S-D8KF67M

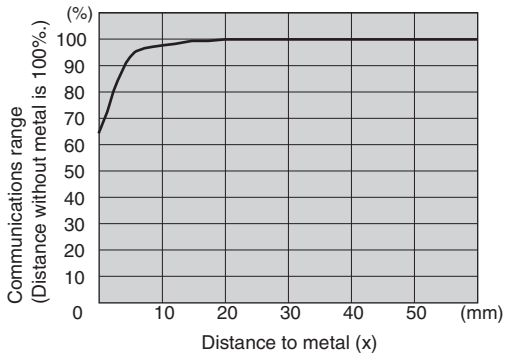

● V680-HS63 and V680S-D8KF67M

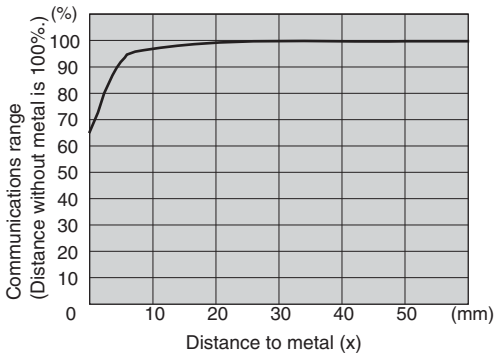

● V680-HS65 and V680S-D8KF67M

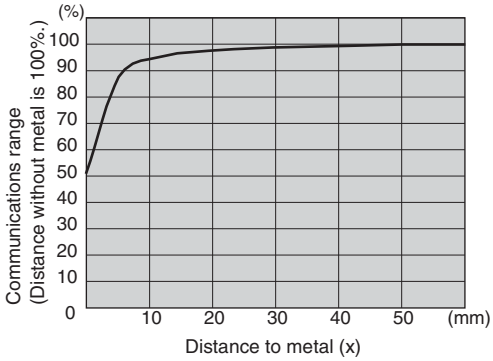

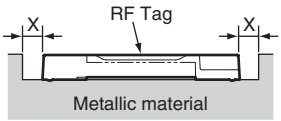

▪ Mutual Interference with RF Tags (Reference)

To prevent malfunctioning due to mutual interference when using more than one RF Tag, leave sufficient space between them as shown in the following diagram.

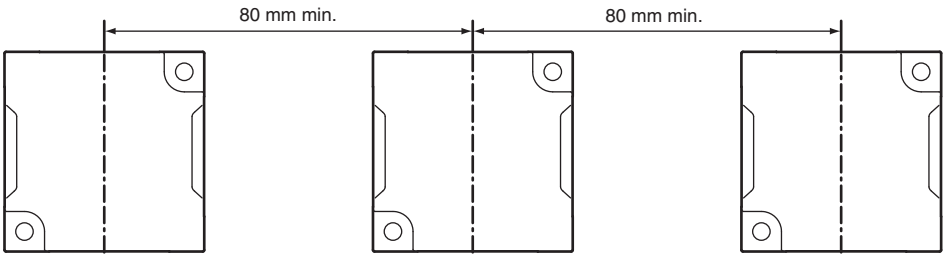

▪ Influence of RF Tag Angle (Reference)

Install Antennas and RF Tags as close to parallel to each other as possible.
Communications are possible even when an Antenna and an RF Tag are mounted at an angle, but the communications range will be shortened. The relation between the angle and the communications range is shown below.

Reduction in Communications Range for V680S-D8KF67M Angle

	RF Tag angle (θ°)									
	0	10	20	30	40	50	60	70	80	90
V680-HS52 and V680S-D8KF67M (Metal on back: Steel)	0%	-1%	-2%	-4%	-6%	-11%	---	---	---	---
V680-HS63 and V680S-D8KF67M (Metal on back: Steel)	0%	-1%	-3%	-7%	-12%	-18%	-29%	-50%	---	---
V680-HS65 and V680S-D8KF67M (Metal on back: Steel)	0%	-2%	-5%	11%	-21%	-36%	---	---	---	---

Measurement Conditions

● V680-HS52 and V680S-D8KF67M
(Metal on back: Steel)

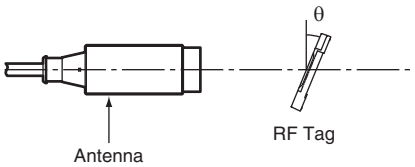

● V680-HS63 and V680S-D8KF67M
(Metal on back: Steel)

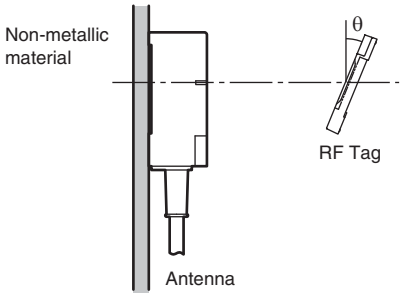

● V680-HS65 and V680S-D8KF67M
(Metal on back: Steel)

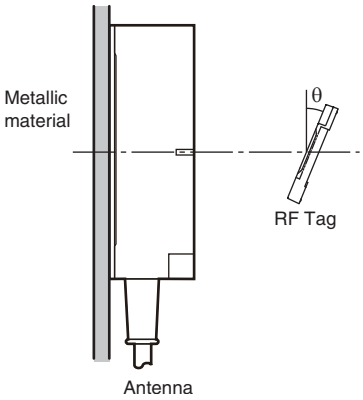

■ V680S-D8KF68

▪ Effect of Metal on Back of RF Tags (Reference)

The V680S-D8KF68 communications range is reduced if there is any metallic material on the back of the RF Tag.

● V680-HS63 and V680S-D8KF68

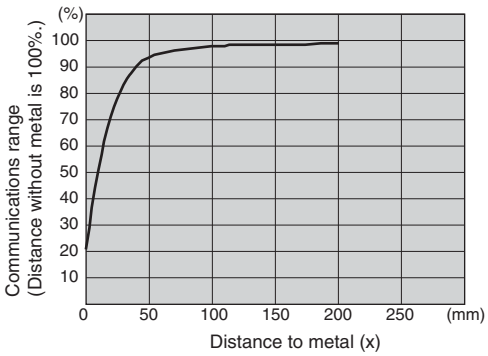

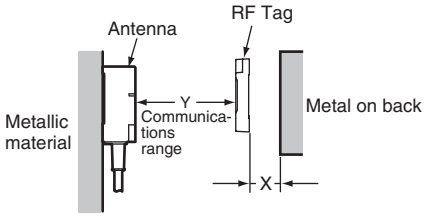

● V680-HS65 and V680S-D8KF68

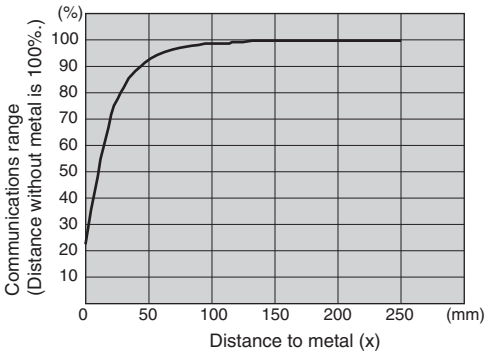

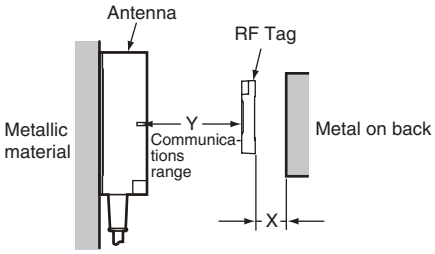

▪ Mutual Interference with RF Tags (Reference)

To prevent malfunctioning due to mutual interference when using more than one RF Tag, leave sufficient space between them as shown in the following diagram.

When V680-HS63 Is Used

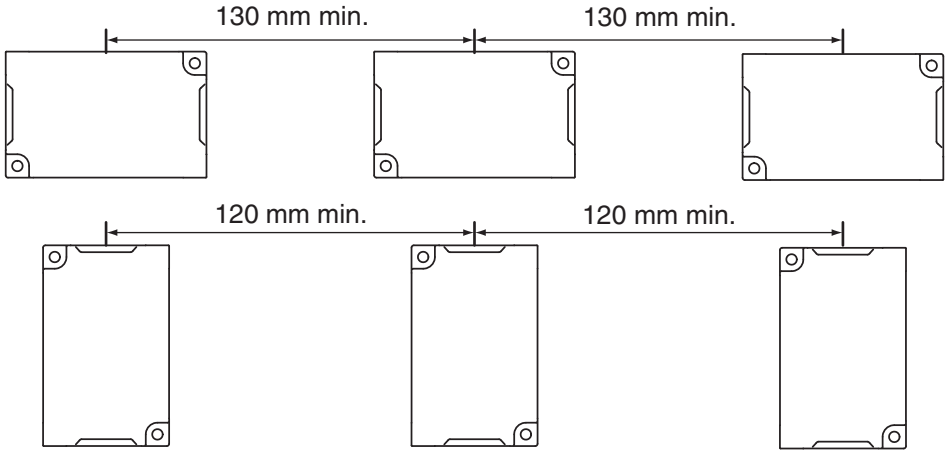

When V680-HS65 Is Used

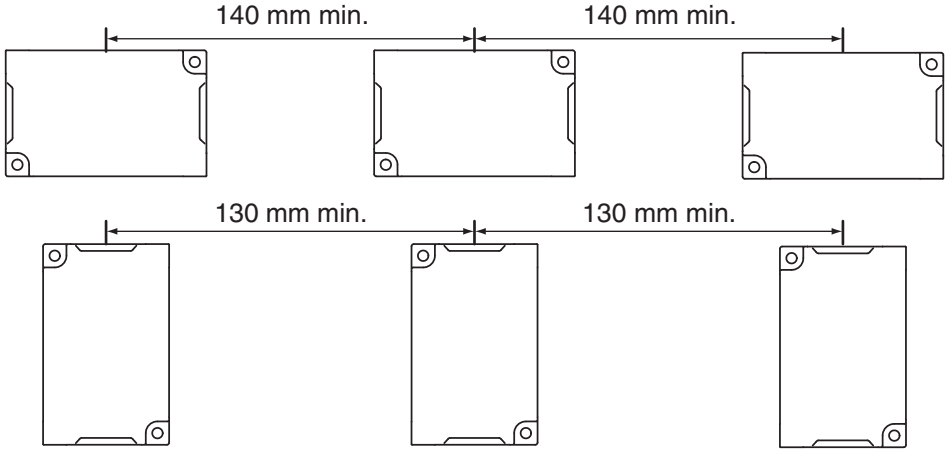

▪ Influence of RF Tag Angle (Reference)

Install Antennas and RF Tags as close to parallel to each other as possible.
Communications are possible even when an Antenna and an RF Tag are mounted at an angle, but the communications range will be shortened. The relation between the angle and the communications range is shown below.

Reduction in Communications Range for V680S-D8KF68 Angle

	RF Tag angle (θ°)									
	0	10	20	30	40	50	60	70	80	90
V680-HS63 and V680S-D8KF68 (Horizontal-facing RF Tag)	0%	-1%	-1%	-1%	-1%	-1%	-3%	-8%	-16%	---
V680-HS63 and V680S-D8KF68 (Vertical-facing RF Tag)	0%	-1%	-2%	-4%	-7%	-11%	-17%	-25%	-37%	-58%
V680-HS65 and V680S-D8KF68 (Horizontal-facing RF Tag)	0%	-1%	-2%	-3%	-6%	-9%	-15%	-22%	-35%	-60%
V680-HS65 and V680S-D8KF68 (Vertical-facing RF Tag)	0%	-1%	-3%	-5%	-9%	-13%	-20%	-29%	-44%	-72%

Measurement Conditions

● V680-HS63 and V680S-D8KF68 (Horizontal-facing RF Tag)

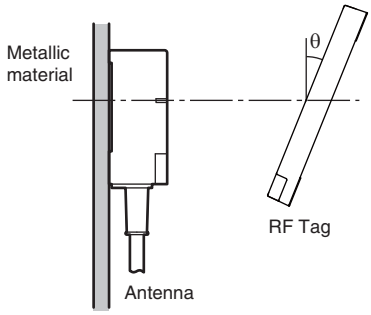

● V680-HS63 and V680S-D8KF68 (Vertical-facing RF Tag)

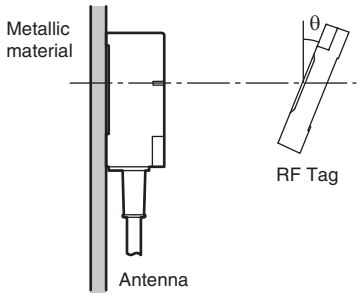

● V680-HS65 and V680S-D8KF68 (Horizontal-facing RF Tag)

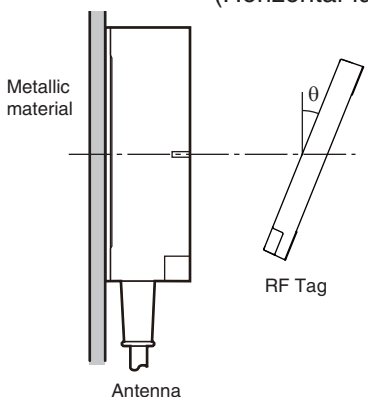

● V680-HS65 and V680S-D8KF68 (Vertical-facing RF Tag)

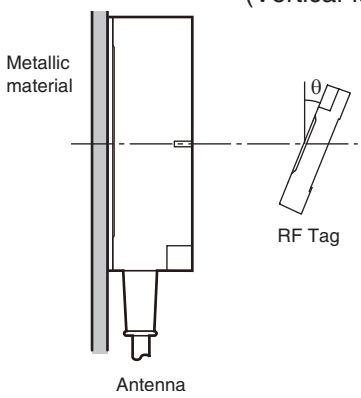

■ V680S-D8KF68M

▪ Effect of Surrounding Metals (Reference)

The V680S-D8KF68M can be surface-mounted or it can be embedded in metal. If it is embedded in metal, the height of the metal casing must not exceed that of the RF Tag.

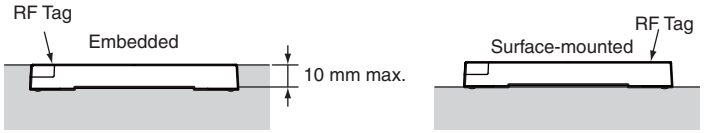

● V680-HS63 and V680S-D8KF68M

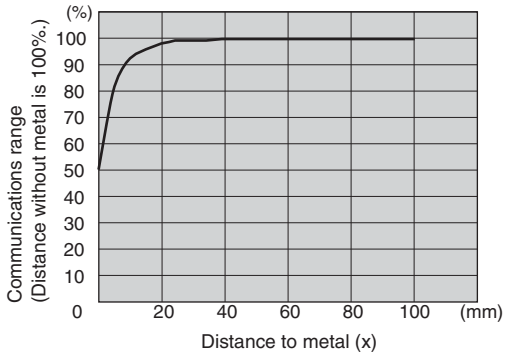

● V680-HS65 and V680S-D8KF68M

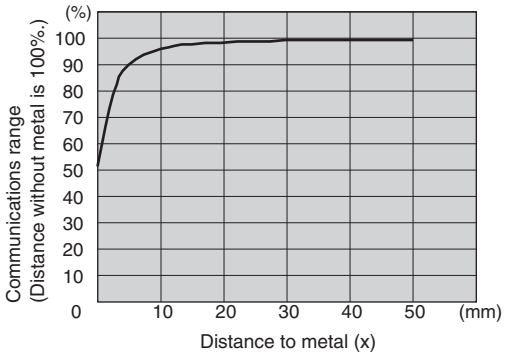

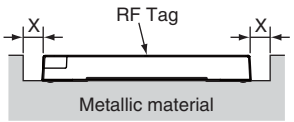

▪ Mutual Interference with RF Tags (Reference)

To prevent malfunctioning due to mutual interference when using more than one RF Tag, leave sufficient space between them as shown in the following diagram.

When V680-HS63 Is Used

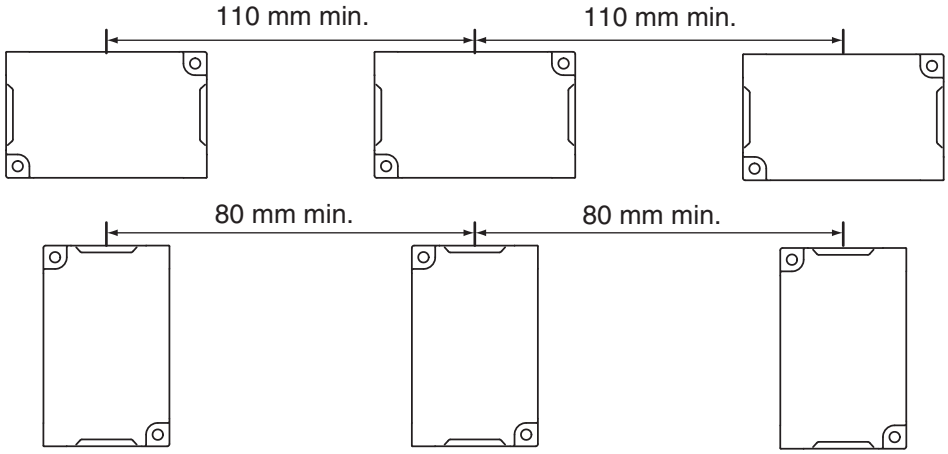

When V680-HS65 Is Used

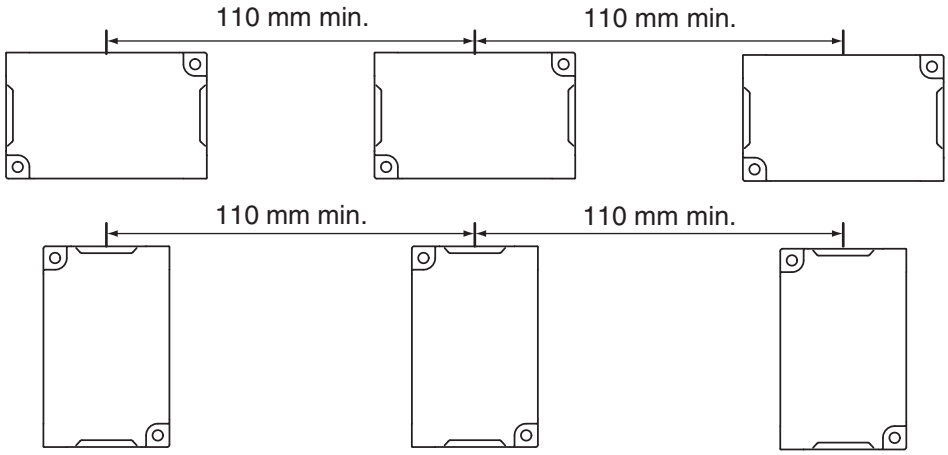

▪ Influence of RF Tag Angle (Reference)

Install Antennas and RF Tags as close to parallel to each other as possible.
Communications are possible even when an Antenna and an RF Tag are mounted at an angle, but the communications range will be shortened. The relation between the angle and the communications range is shown below.

Reduction in Communications Range for V680S-D8KF68M Angle

	RF Tag angle (θ°)									
	0	10	20	30	40	50	60	70	80	90
V680-HS63 and V680S-D8KF68M(Horizontal-facing RF Tag) (Metal on back: Steel)	0%	0%	0%	0%	0%	0%	0%	-5%	-14%	---
V680-HS63 and V680S-D8KF68M(Vertical-facing RF Tag) (Metal on back: Steel)	0%	-1%	-2%	-5%	-8%	-14%	-23%	-36%	---	---
V680-HS65 and V680S-D8KF68M(Horizontal-facing RF Tag) (Metal on back: Steel)	0%	-1%	-2%	-4%	-7%	-12%	-21%	-41%	---	---
V680-HS65 and V680S-D8KF68M(Vertical-facing RF Tag) (Metal on back: Steel)	0%	-1%	-3%	-6%	-12%	-20%	-32%	-59%	-65%	---

Measurement Conditions

● V680-HS63 and V680S-D8KF68(Horizontal-facing RF Tag) (Metal on back: Steel)

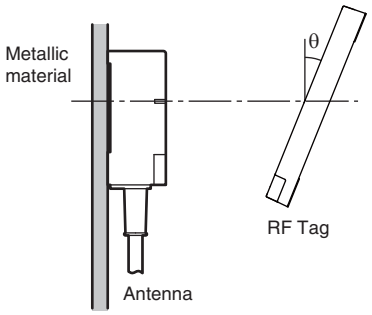

● V680-HS63 and V680S-D8KF68(Vertical-facing RF Tag) (Metal on back: Steel)

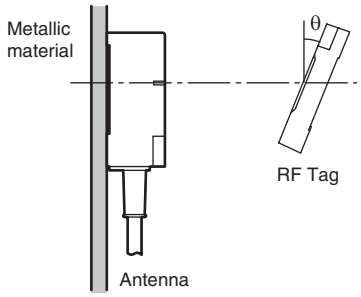

● V680-HS65 and V680S-D8KF68(Horizontal-facing RF Tag) (Metal on back: Steel)

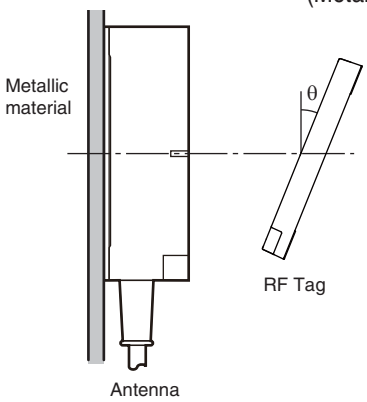

● V680-HS65 and V680S-D8KF68(Vertical-facing RF Tag) (Metal on back: Steel)

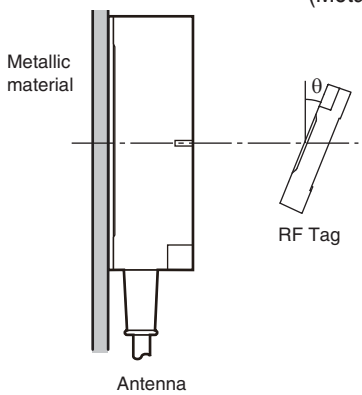

RF Tag Memory Map

V680-D1KP□□

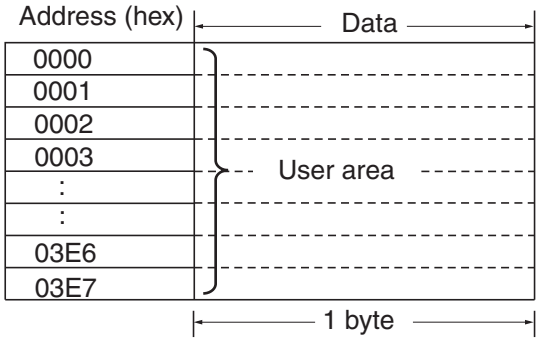

These RF Tags use EEPROM for memory. Including the write protection setting area, which is from 0000 to 0003 hex, the user can use a total of 1,000 bytes of space.

V680-D2KF□□ and V680S-D2KF6□

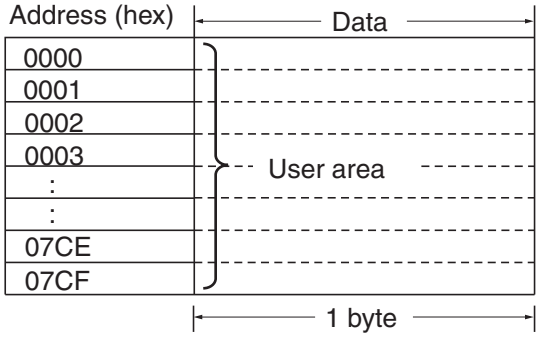

These RF Tags use FRAM for memory. Including the write protection setting area, which is from 0000 to 0003 hex, the user can use a total of 2,000 bytes of space.

V680-D8KF□□and V680S-D8KF6□

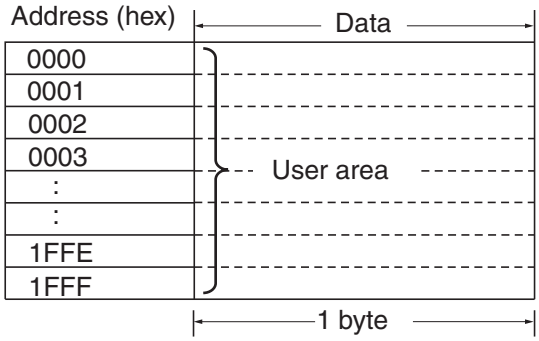

These RF Tags use FRAM for memory. Including the write protection setting area, which is from 0000 to 0003 hex, the user can use a total of 8,192 bytes of space.

V680-D32KF□□

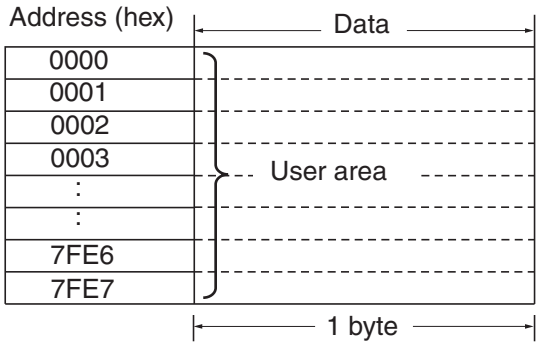

These RF Tags use FRAM for memory. Including the write protection setting area, which is from 0000 to 0003 hex, the user can use a total of 32,744 bytes of space.

CHECK!

Memory is normally accessed in 16-bit (2-byte) units. When using 1-BYTE WRITE, memory will be accessed in 8-bit (1-byte) units.

The start address for the data to be write protected is always 0001 hex and cannot be changed. Therefore, write any data you want to write protect starting from address 0001 hex.

RF Tag Memory Capacities and Memory Types

(As of May 2018)

Model	Memory capacity (user memory)	Memory type	Life expectancy
V680-D1KP52MT V680-D1KP52M-BT01 V680-D1KP52M-BT11 V680-D1KP53M V680-D1KP54T V680-D1KP66T V680-D1KP66MT V680-D1KP66T-SP V680-D1KP58HTN	1,000 bytes	EEPROM	Write endurance: 100,000 times per block (25°C) Data retention: 10 years after writing (85°C or less)
V680-D2KF52M V680-D2KF52M-BT01 V680-D2KF52M-BT11	2,000 bytes	FRAM	Access frequency: 10 billion times Data retention: 10 years after writing (55°C or less)
V680-D8KF67 V680-D8KF67M V680-D8KF68	8,192 bytes		Access frequency: 10 billion times Data retention: 10 years after writing (70°C or less)
V680-D32KF68	32,744 bytes		
V680S-D2KF67 V680S-D2KF67M V680S-D2KF68 V680S-D2KF68M	2,000 bytes	FRAM	Access frequency: One trillion times Data retention: 10 years after writing (85°C or less)
V680S-D8KF67 V680S-D8KF67M V680S-D8KF68 V680S-D8KF68M	8,192 bytes		

Multi-vendor Use

Connecting a Non-OMRON Configurator

This section describes how to connect OMRON Slaves to a non-OMRON Master.
Do not perform communications with a bit strobe connection for Slaves that have outputs. DeviceNet I/O communications have multiple connection types, such as poll and bit strobe, but for DeviceNet specifications, bit strobe connections are used for inputs only. Following these specifications, OMRON Master Units communicate with output Slaves by using a poll connection.
Some non-OMRON Masters perform communications with output units by using a bit strobe connection. Check the specifications before performing connections when connecting with a non-OMRON Master.
When connecting an OMRON Slave to a non-OMRON Master, it is necessary to install the OMRON Slave's EDS file in the non-OMRON Configurator, and set the Slave data in the Master. (Some non-OMRON Masters can be connected with performing this setting.) In addition to enabling connection to non-OMRON Masters, installing the EDS file in the Configurator also enables setting specific parameters for each Slave by using the Configurator.

CHECK! If the EDS file cannot be obtained or the non-OMRON Configurator does not support EDS files, you must directly input the connection type and the data size.

CHECK! The EDS file uses default settings (i.e., mode switch 0). To use other settings, change the connection type, data size, and connection pathe for the set mode.
For details, refer to *Object Implementation* in this section.
p.223 to p.224

Refer to the following devices profiles if more detailed DeviceNet specifications for Slaves are required when registering the scan list.

Device Profiles

General data	Applicable DeviceNet specifications	Volume 1 Edition 3.1 Volume 3 Edition 1.3	
	Vendor name	OMRON Corporation	Vendor ID = 47
	Device profile name	Slave: Generic	Profile number = 0
	Product catalog number	Manual number	
	Product revision	2.1	
Physical conformance data	Network power consumption	24 VDC, 40 mA max.	
	Connector type	Open flag	
	Physical layer insulation	Yes	
	Support indicator	Module Network	
	MAC ID setting	Set with software or rotary switches (software setting numbers 64 to 99)	
	Default MAC ID	0	
	Transmission baud rate setting	No (baud rate recognized automatically)	
	Supported transmission baud rates	125, 250, or 500 kbps	
Communications data	Predefined Master/Slave connection set	Group 2 only server	
	Dynamic connection support (UCOMM)	No	
	Explicit message fragmentation support	Yes	

Object Implementation

Identity Object (0x01)

Object class	Attribute	Not supported
	Service	Not supported

		ID	Description	GET	SET	Value (hex)
Object instance	Attribute	1	Vender	Yes	No	47
		2	Product type	Yes	No	0
		3	Product code	Yes	No	208
		4	Revision	Yes	No	2,1
		5	Status (Bits Supported)	Yes	No	bit 0 only
		6	Serial number	Yes	No	per Unit
		7	Product name	Yes	No	V680-HAM42*1
		8	State	No	No	
	Service	DeviceNet service		Parameter option		
		05 hex	Reset	No		
		0E hex	Get_Attribute_Single	No		

*1 The number of characters to be registered is limited, so “-DRT” is omitted.

Message Router Object (0x02)

Object class	Attribute	Not supported
	Service	Not supported
Object instance	Attribute	Not supported
	Service	Not supported
Addition of vender-specific specifications		No

DeviceNet Object (0x03)

		ID	Description	GET	SET	Value (hex)
Object class	Attribute	1	Revision	Yes	No	02
	Service	DeviceNet service		Parameter option		
		0E hex	Get_Attribute_Single	No		

Object instance	Attribute	ID	Description	GET	SET	Value (hex)
		1	MAC ID	Yes	No	
		2	Baud rate	Yes	No	
		3	BOI	Yes	No	00
		4	Bus off counter	Yes	No	
		5	Allocation information	Yes	No	
		6	MAC ID switch changed	Yes	No	
		7	Baud rate switch changed	Yes	No	
		8	MAC ID switch value	Yes	No	
		9	Baud rate switch value	Yes	No	
	Service	DeviceNet service		Parameter option		
		0E hex		No		
		10 hex		No		
		4B hex		No		
		4C hex		No		

■ Assembly Object (0 × 04)

Object class	Attribute	Not supported
	Service	Not supported

Object instance (See note.)	Section	Data		Maximum number of instances		
	Instance type	Static I/O		1		
	Attribute	Description		GET	SET	Value (hex)
		1	Number of Members in List	Yes	No	
		2	Member List	Yes	No	
		3	Data	Yes	No	00
	Service	DeviceNet service		Parameter option		
		0E hex	Get_Attribute_Single	No		
		10 hex	Set_Attribute_Single	No		

Note. The instance numbers are as follows:

V600-compatible	IN: 100, OUT: 101
4-bytes access mode	IN: 102, OUT: 103
26-bytes access mode	IN: 104, OUT: 105
58-bytes access mode	IN: 106, OUT: 107

■ Connection Object (0x05)

Object class	Attribute	Not supported
	Service	Not supported
	Maximum number of active connections	1

Object instance 1	Section	Data		Maximum number of instances		
	Instance type	Explicit Message		1		
	Production trigger	Cyclic				
	Transport type	Server				
	Transport class	3				
	Attribute	ID	Description	GET	SET	Value (hex)
		1	State	Yes	No	
		2	Instance type	Yes	No	00
		3	Transport class trigger	Yes	No	83
		4	Produced connection ID	Yes	No	---
		5	Consumed connection ID	Yes	No	---
		6	Initial comm characteristics	Yes	No	21
		7	Produced connection size	Yes	No	64
		8	Consumed connection size	Yes	No	64
		9	Expected packet rate	Yes	No	
		12	Watchdog time-out action	Yes	No	01
		13	Produced connection path length	Yes	No	0000
		14	Produced connection path	Yes	No	
		15	Consumed connection length	Yes	No	0000
		16	Consumed connection path length	Yes	No	
		17	Production inhibit time	Yes	No	
	Service	DeviceNet service		Parameter option		
		05 hex	Reset	No		
		0E hex	Get_Attribute_Single	No		
		10 hex	Set_Attribute_Single	No		

Object instance 2	Section	Data		Maximum number of instances		
	Instance type	Polled I/O		1		
	Production trigger	Cyclic				
	Transport type	Server				
	Transport class	2				
	Attribute	ID	Description	GET	SET	Value (hex)
		1	State	Yes	No	
		2	Instance type	Yes	No	00
		3	Transport class trigger	Yes	No	82
		4	Produced connection ID	Yes	No	---
		5	Consumed connection ID	Yes	No	---
		6	Initial comm characteristics	Yes	No	01
		7	Produced connection size	Yes	No	(See note1.)
		8	Consumed connection size	Yes	No	(See note2.)
		9	Expected packet rate	Yes	No	
		12	Watchdog time-out action	Yes	No	00
		13	Produced connection path length	Yes	No	06
		14	Produced connection path	Yes	No	(See note3.)
		15	Consumed connection length	Yes	No	06
		16	Consumed connection path length	Yes	No	(See note4.)
		17	Production inhibit time	Yes	No	0000
	Service	DeviceNet service		Parameter option		
		05 hex	Reset	No		
		0E hex	Get_Attribute_Single	No		
		10 hex	Set_Attribute_Single	No		

Note 1. The number of input bytes in the set mode.
2. The number of output bytes in the set mode.
3.,4. Depends on the set mode.

Mode	Note1.	Note3.	Note2.	Note4.
V600-compatible mode	04	20 04 24 65 30 03	04	20 04 24 64 30 03
4-bytes access mode	08	20 04 24 67 30 03	08	20 04 24 66 30 03
26-bytes access mode	32	20 04 24 69 30 03	32	20 04 24 68 30 03
58-bytes access mode	64	20 04 24 6B 30 03	64	20 04 24 6A 30 03

Object instance 3	Section	Data		Maximum number of instances		
	Instance type	Polled I/O		1		
	Production trigger	Cyclic				
	Transport type	Server				
	Transport class	2				
	Attribute	ID	Description	GET	SET	Value (hex)
		1	State	Yes	No	
		2	Instance type	Yes	No	01
		3	Transport class trigger	Yes	No	82
		4	Produced connection ID	Yes	No	---
		5	Consumed connection ID	Yes	No	---
		6	Initial comm characteristics	Yes	No	02
		7	Produced connection size	Yes	No	(See note1.)
		8	Consumed connection size	Yes	No	0800
		9	Expected packet rate	Yes	No	
		12	Watchdog time-out action	Yes	No	00
		13	Produced connection path length	Yes	No	06
		14	Produced connection path	Yes	No	(See note2.)
		15	Consumed connection length	Yes	No	0000
		16	Consumed connection path length	Yes	No	---
		17	Production inhibit time	Yes	No	
	Service	DeviceNet service		Parameter option		
		05 hex	Reset	No		
		0E hex	Get_Attribute_Single	No		
		10 hex	Set_Attribute_Single	No		

Note 1., 2. Depends on the set mode.

Mode	Note1.	Note2.
V600-compatible mode	04	20 04 24 65 30 03
4-bytes access mode	08	20 04 24 67 30 03
26-bytes access mode	08	20 04 24 69 30 03
58-bytes access mode	08	20 04 24 6B 30 03

Chemical Resistance of the Antennas

Applicable Models

V680-HS51 V680-HS52-W/R V680-HS63-W/R V680-HS65-W/R V680-HS61

ABS resin is used for case material and epoxy resin for filling material. Refer to the following lists and do not use chemicals that affect ABS and epoxy resin.

■Chemicals That Cause Deformations, Cracks, Etc.

ABS resin	Epoxy resin
Trichlene, acetone, xylene, toluene, gasoline, creosol, methylene chloride, phenol, cyclohexane, aqua regia, chromic acid, sulfuric acid (90% RT), methyl ethyl ketone, aniline, nitrobenzine, monochlorobenzinepyridine, nitric acid (60% RT), formic acid (80% RT)	Aqua regia, chromic acid, sulfuric acid (90% RT), nitric acid (60% RT), ammonia solution, acetone, methylene chloride, phenol

■Chemicals That May Cause Discoloration, Swelling, Etc.

ABS resin	Epoxy resin
Hydrochloric acid, alcohol, Freon, sodium hydroxide, hydrogen peroxide, benzine, sulfuric acid (10% RT), nitric acid (10% RT), phosphoric acid (85% RT), ammonia solution	Sulfuric acid (10% RT), nitric acid (10% RT), hydrochloric acid (30% RT), acetic acid (50% RT), oxalic acid, calcium hydroxide, benzine, creosol, alcohol, cyclohexane, toluene, xylene, benzine, grease

■Chemicals That Do Not Affect ABS Resin or Epoxy Resin

ABS resin	Epoxy resin
Ammonia, kerosine, mineral oil, developer, Yushiroken S50, Chemi-Cool Z, Velocity No. 3, Yushiroken EEE-30Y, petroleum, grease, acetic acid, oxalic acid, calcium hydroxide, phosphoric acid (30% RT), hydrochloric acid (10% RT), potassium hydroxide	Ammonia, hydrochloric acid (10% RT), potassium hydroxide, petroleum, gasoline, Yushiroken S50, Chemi-Cool Z, Velocity No. 3, Yushiroken EEE-30Y

Note: The above results are from tests conducted a room temperature (23°C). Even if the chemicals do not affect the ABS or epoxy resins at room temperature, they may affect the resins at higher or lower temperatures. Check the chemicals carefully in advance.

Chemical Resistance of RF Tags

Applicable Models

V680-D1KP52MT V680-D1KP52M-BT01/-BT11 V680-D1KP53M
V680-D1KP52MT V680-D2KF52M-BT01/-BT11

PPS resin is used for case material and epoxy resin for filling material. Refer to the following lists and do not use chemicals that affect PPS and epoxy resin.
RF Tags cannot be used in applications with explosion-proof specifications.

■ Chemicals That Cause Deformations, Cracks, Etc.

PPS resin	Epoxy resin
Aqua regia	Aqua regia, chromic acid, sulfuric acid (90% RT), nitric acid (60% RT), ammonia solution, acetone, methylene chloride, phenol

■ Chemicals That May Cause Discoloration, Swelling, Etc.

PPS resin	Epoxy resin
Nitric acid (60% RT)	Sulfuric acid (10% RT), nitric acid (10% RT), concetrated hydrochloric acid, acetic acid (50% RT), oxalic acid, calcium hydroxide, benzine, creosol, alcohol, cyclohexane, toluene, xylene, benzine, grease

■ Chemicals that Do Not Affect PPS Resin or Epoxy Resin

PPS resin	Epoxy resin
Hydrochloric acid (37%RT), sulfuric acid (98%RT), nitric acid (40%RT), hydrogen fluoride solution (40%RT), chromic acid (40%RT), hydrogen peroxide solution (28%RT), sodium hydroxide solution (60%RT), ammonia solution (28%RT), sodium chloride (10%RT), sodium carbonate (20%RT), sodium hypochlorite solution, phenol solution (5%RT), glacial acetic acid, acetic acid, oleic acid, methyl alcohol (95%RT), ethyl alcohol (95%RT), ethyl acetate, sebacic acid, diethylhexyl, acetone, diethyl ether, n-heptane, 2-2-4 trimethylpentane, benzine, toluene, aniline, mineral oil, gasoline, insulating oil, dichloroethylene, carbon tetrachloride	Ammonia, hydrochloric acid (10% RT), potassium hydroxide, petroleum, gasoline, Yushiroken S50, Chemi-Cool Z, Velocity No. 3, Yushiroken EEE-30Y, methyl ethyl ketone, sodium hydroxide (10%RT)

Note: The above results are from tests conducted a room temperature (23°C). Even if the chemicals do not affect the PPS or epoxy resins at room temperature, they may affect the resins at higher or lower temperatures. Check the chemicals carefully in advance.

Applicable Models

V680-D1KP54T V680-D1KP66T/MT V680-D1KP58HTN

V680S-D2KF67/-D2KF67M/-D2KF68/-D2KF68M V680S-D8KF67/-D8KF67M/-D8KF68/-D8KF68M

Chemical		At room temperature	90°C
Hydrochloric acid	37%	A	A
	10%	A	A
Sulfuric acid	98%	A	B
	50%	A	A
	30%	A	A
	3%	A	A
Nitric acid	60%	B	C
	40%	A	B
	10%	A	A
Hydrogen fluoride solution	40%	A	A
Chromic acid	40%	A	A
Hydrogen peroxide solution	28%	A	B
	3%	A	A
Sodium hydroxide solution	60%	A	A
	10%	A	A
	1%	A	A
Ammonia solution	28%	A	B
	10%	A	B
Sodium chloride	10%	A	A
Sodium carbonate	20%	A	A
	2%	A	A

Chemical		At room temperature	90°C
Sodium hypochlorite solution		A	A
Phenol solution	5%	A	A
Glacial acetic acid		A	A
Acetic acid		A	A
Oleic acid		A	A
Methyl alcohol	95%	A	A
Ethyl alcohol	95%	A	A
Ethyl acetate		A	A
Sebacic acid diethylhexyl		A	A
Acetone		A	A
Diethyl ether		A	A
n-heptane		A	A
2-2-4 trimethylpentane		A	A
Benzene		A	A
Toluene		A	A
Aniline		A	A
Mineral oil		A	A
Gasoline		A	A
Insulating oil		A	A
Dichloroethylene		A	A
Carbon tetrachloride		A	A

A: Has no adverse effect, B: May cause discoloration, swelling, etc., C: Causes deformation, cracks, etc.

CHECK!

The above table shows the extent of changes in PPS resin exposed to each chemical at room temperature and at 90°C. If actual chemicals, concentrations, and temperatures are different from those shown in the tables, always conduct tests under the actual conditions in which the RF Tags are to be used.

Applicable Model

V680-D1KP66T-SP

PFA is used for the V680-D1KP66T-SP RF Tag coating.
Refer to the following materials and check the characteristics before using them.

■ Chemical Resistance of PFA Fluororesin (Reference Material)

PFA: Tetrafluorethylene-Perfluoroalkylvinyletheir copolymer

PFA fluororesin is non-reactive to most chemicals.
It reacts to alkaline metals in the melted state, F2 (fluorine) under high temperature and high pressure, and some halogen derivatives.
The results testing by immersing the PFA material in commonly used organic and inorganic chemicals are shown below. This testing involves placing a compression molded test piece (1.3-mm thickness) in the chemicals at room temperature for one week (168 hours), then removing it to measure the change in weight, tensile strength, and stretch. If the change in tensile strength is less than 15%, elasticity is less than 10%, and weight is less than 0.5%, the effect is considered minimal.
When fluids that wet the resin surface, such as trichloroacetic acid, Tri-n-butylamine hydrofluoride, perchloroethylene, and carbon tetrachloride, are applied at high temperatures, it is likely that the PFA will increase weight by absorption and lose its tensile strength. Even if chemicals that are solvents are absorbed, the molecular structure will not change. If the PFA is subject to deformation at high temperatures, deformation at high pressures, or other physical damage, the absorbed chemicals will repeatedly expand and contract within the PFA, causing physical defects such as cracks or blistering. However, these are problems that are likely to occur with any type of plastic.

▪ Inorganic Chemicals

Chemical	Test temperature (°C)	Residual characteristic (%)		Weight gain (%)
		Tensile strength	Stretch	
Concentrated hydrochloric acid	120	98	100	0.0
Concentrated sulfuric acid	120	95	98	0.0
Hydrofluoric acid (60%RT)	23	99	99	0.0
Fuming sulfuric acid	23	95	96	0.0
Aqua regia	120	99	100	0.0
Chromic acid (50% RT)	120	93	97	0.0
Concentrated nitric acid	120	95	98	0.0
Fuming nitric acid	23	99	99	0.0
66	98	100	100	0.0
Caustic soda (50% RT)	120	93	99	0.4
Hydrogen peroxide solution (30% RT)	23	93	95	0.0
Bromine	23	99	100	0.0
Chlorine	120	92	100	0.5
Ferrous chloride (25% RT)	100	93	98	0.0
Zinc chloride (25% RT)	100	96	100	0.0
Sulfuryl chloride	69	83	100	2.7
Chlorosulfonic acid	151	91	100	0.0
Concentrated phosphoric acid	100	93	100	0.0

▪ Organic Chemicals

Chemical	Test temperature (°C)	Residual characteristic (%)		Weight gain (%)
		Tensile strength	Stretch	
Water-acetic acid	118	95	100	0.4
Acetic anhydride	139	91	99	0.3
Trichloroacetic acid	196	90	100	2.2
Isooctane	99	94	100	0.7
Naphtha	100	91	100	0.5
Mineral oil	180	87	95	0.0
Toluene	110	88	100	0.7
o-Creosol	191	92	96	0.2
Nitrobenzene	210	90	100	0.7
Benzyl alcohol	205	93	99	0.3
Aniline	185	94	100	0.3
n-Butylamine	78	86	97	0.4
Ethylenediamine	117	96	100	0.1
Tetrahydrofuran	66	88	100	0.7
Benzaldehyde	179	90	99	0.5
Cyclohexane	156	92	100	0.4
Methyl ethyl ketone	80	90	100	0.6
Acetophenone	202	90	100	0.6
Dimethylphtalate	200	98	100	0.3
n-Butyl acetate	125	93	100	0.5
Tri-n-butyl phosphate	200	91	100	2.0
Methylene chloride	40	94	100	0.8
Perchloroethylene	121	86	100	2.0
Carbon tetrachloride	77	87	100	2.3
Dimethyl formamide	154	96	100	0.2
Dimethyl sulfoxide	189	95	100	0.1
Dioxane	101	92	100	0.6

Reference: Satokawa Takaomi, Fluoro-resin Handbook, Nikkan Kogyo Shimbun Ltd.

Applicable Models

V680-D2KF67/67M V680-D8KF67/67M V680-D8KF68/D32KF68

Chemicals that affect RF Tags are shown below.
Polybutylene terephthalate (PBT) resin is used for case material and epoxy resin for filling material.
Refer to the following lists and do not use chemicals that affect PBT and epoxy resins.
RF Tags cannot be used in applications with explosion-proof specifications.

■ Chemicals That Cause Deformations, Cracks, Etc.

PBT resin	Epoxy resin
Acetone, trichloroethylene, ethylene dichloride, sodium hydroxide, and other alkaline substances	Aqua regia, chromic acid, sulfuric acid (90% RT), nitric acid (60% RT), liquid ammonia, acetone, methylene chloride, phenol

■ Chemicals That May Cause Discoloration, Swelling, Etc.

PBT resin	Epoxy resin
Hydrochloric acid (10% RT), acetic acid (5% RT), benzene	Sulfuric acid (10% RT), nitric acid (10% RT), concentrated hydrochloric acid, acetic acid (50% RT), oxalic acid, calcium hydroxide, benzene, cresol, alcohol, microhexanon, toluene, xylene, benzene, grease

■ Chemicals that Do Not Affect PPS Resin or Epoxy Resin

PBT resin	Epoxy resin
Nitric acid (30% RT), concentrated hydrochloric acid, acetic acid, ethyl acetate (100% RT), potassium permaganate (5% RH), ethyl acetate, carbon tetrachloride, methanol, ethanol, gasoline	Ammonia, hydrochloric acid (10% RT), potassium hydrate, petroleum, gasoline, Yushiroken S50, Chemi-cool Z, Velocity No. 3, Yushiroken EEE-30Y, methyl ethyl ketone, sodium hydroxide

Note: The above results are from tests conducted at room temperature (23°C). Even if the chemicals do not affect the PPS or epoxy resins at room temperature, they may affect the resins at higher or lower temperatures. Check the chemicals carefully in advance.

Degree of Protection

Ingress protection degrees (IP-□□) are determined by the following tests. Be sure to check the sealing capability under the actual operating environment and conditions before actual use.

■ IEC (International Electrotechnical Commission)

IEC 60529:2001

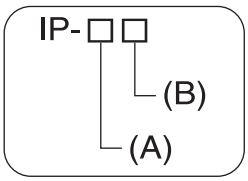

(A) First Digit: Degree of Protection from Solid Materials

Degree	Protection	
0		No protection
1	50 mm dia.	Protects against penetration of any solid object such as a hand that is 50 mm or more in diameter.
2	12.5 mm dia.	Protects against penetration of any solid object, that is 12.5 mm or more in diameter. Even if finger or other object 12 mm in diameter penetrates, it will not reach a hazardous part.
3	2.5 mm	Protects against penetration of any solid object, such as a wire, that is 2.5 mm or more in diameter.
4	1 mm	Protects against penetration of any solid object, such as a wire, that is 1 mm or more in diameter.
5		Protects against penetration of dust of a quantity that may cause malfunction or obstruct the safe operation of the product.
6		Protects against penetration of all dust.

(B) Second Digit: Degree of Protection Against Water

Degree	Protection		Test method (with pure water)
0	No protection	Not protected against water.	No test
1	Protection against water drops	Protects against vertical drops of water towards the product.	Water is dropped vertically towards the product from the test machine for 10 min. 200 mm
2	Protection against water drop	Protects against drops of water approaching at a maximum angle of 15° to the left, right, back, and front from vertical towards the product.	Water is dropped for 2.5 min each (i.e., 10 min in total) towards the product inclined 15° to the left, right, back, and front from the test machine. 15° 200 mm
3	Protection against sprinkled water	Protects against sprinkled water approaching at a maximum angle of 60° from vertical towards the product.	Water is sprinkled for 10 min at a maximum angle of 60° to the left and right from vertical from the test machine. 0.07ℓ/min per hole

Degree	Protection		Test method (with pure water)
4	Protection against water spray	Protects against water spray approaching at any angle towards the product.	Water is sprayed at any angle towards the product for 10 min from the test machine. 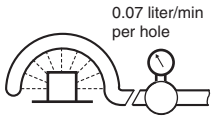
5	Protection against water jet spray	Protects against water jet spray approaching at any angle towards the product.	Water is jet sprayed at any angle towards the product for 1 min per square meter for at least 3 min in total from the test machine. 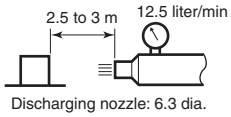
6	Protection against high pressure water jet spray	Protects against high-pressure water jet spray approaching at any angle towards the product.	Water is jet sprayed at any angle towards the product for 1 min per square meter for at least 3 min in total from the test machine. 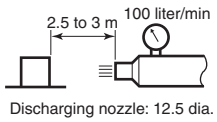
7	Protection against limited immersion in water	Resists the penetration of water when the product is placed underwater at specified pressure for a specified time.	The product is placed 1 m deep in water (if the product is 850 mm max. in height) for 30 min. 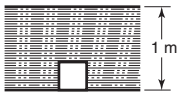
8 (See note.)	Protection against long-term immersion in water	Can be used continuously underwater.	The test method is determined by the manufacturer and user.

Note: OMRON Test Method
Usage condition: 10 m or less under water in natural conditions
1. No water ingress after 1 hour under water at 2 atmospheres of pressure.
2. Sensing distance and insulation resistance specifications must be met after 100 repetitions of half hour in 5°C water and half hour in 85°C water.

About IPX9K
IPX9K is a protection standard regarding high temperature and high-pressure water which is defined by the German standard (DIN 40050 PART9).
Water is sprayed on 80 °C hot water with the water pressure of 80 to 100BAR from a nozzle to the test piece.
Amount of water is 14 to 16 liters/minute.
The distance between the test piece and a nozzle is 10 to 15 cm, and the directions of water-drainage are 0 degrees, 30 degrees, 60 degrees, and 90 degrees horizontally.
They are evaluated with the test piece is rotating on a horizontal plane by 30 seconds in each direction.

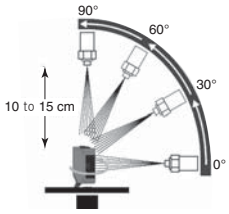

■ Oil Resistance (OMRON in-house standard)

	Protection
Oil-resistant	No adverse affect from oil drops or oil spray approaching from any direction.
Oil-proof	Protects against penetration of oil drops or oil spray approaching from any direction.

Note. Oil resistance has been tested using a specific oil as defined in the OMRON test method. (JIS C 0920:2003, Appendix 1)

Revision History

A manual revision code appears as a suffix to the catalog number at the bottom of the front and rear pages.

Man. No.: Z278-E1-10

↑

Revision code

Revision code	Date	Revised contents
01	March 2008	Original production
01A	July 2008	Added item for the overseas regulations and standards, and made other minor corrections.
02	January 2009	Added items for V680-D1KP53M, V680-D8KF67/-D8KF67M RF Tags, overseas regulations and standards, and made other minor corrections.
02A	May 2009	The material of V680-D2KF67/-D2KF67M is changed, and made other minor corrections.
03	January 2012	Added items for V680-D1KP52M-BT01/-D1KP52M-BT11/-D2KF52M-BT01/-D2KF52M-BT11 RF Tags, and made other minor corrections.
04	November 2012	Added item for V680-D1KP58HTN RF Tag, and made other minor corrections.
04A	February 2013	Minor changed.
05	February 2014	Added items for V680S-D2KF67/-D2KF67M/-D2KF68/-D2KF68M RF Tags. Deleted items for V680-D2KF67 RF Tags. and made other minor corrections.
05A	April 2014	The dimensions of V680S-D2KF67/-D2KF67M/-D2KF68/-D2KF68M is changed.
06	October 2014	Added items for V680S-D8KF67/-D8KF67M/-D8KF68/-D8KF68M RF Tags. and made other minor corrections.
07	May 2018	Added items for V680-D1KP54T RF Tags, and made other minor corrections.
08	November 2018	Made other minor corrections.
09	December 2019	Minor changed.
10	Jun 2023	Added Items for V680-HS61.

OMRON Corporation **Industrial Automation Company**
Tokyo, JAPAN
Contact: www.ia.omron.com

Regional Headquarters
OMRON EUROPE B.V.
Wegalaan 67-69, 2132 JD Hoofddorp
The Netherlands
Tel: (31)2356-81-300/Fax: (31)2356-81-388

OMRON ELECTRONICS LLC
2895 Greenspoint Parkway, Suite 200
Hoffman Estates, IL 60169 U.S.A
Tel: (1) 847-843-7900/Fax: (1) 847-843-7787

OMRON ASIA PACIFIC PTE. LTD.
No. 438A Alexandra Road # 05-05/08 (Lobby 2),
Alexandra Technopark,
Singapore 119967
Tel: (65) 6835-3011/Fax: (65) 6835-2711

OMRON (CHINA) CO., LTD.
Room 2211, Bank of China Tower,
200 Yin Cheng Zhong Road,
PuDong New Area, Shanghai, 200120, China
Tel: (86) 21-5037-2222/Fax: (86) 21-5037-2200

Authorized Distributor:

© OMRON Corporation 2008-2018 All Rights Reserved.
In the interest of product improvement,
specifications are subject to change without notice.

Man. No. Z278-E1-09 1219(0308)