PRINTRONIX®

Quick Setup Guide

SL5000r™ and T5000r™
RFID Smart Label and Thermal Printers

This Quick Setup Guide contains a CD-ROM with the following materials:

- The User's Manual
- Programmer's Reference Manuals
- Useful utility programs

The CD-ROM is located in a plastic pocket in the back cover.

Do not discard this guide. If you move or pack the printer in the future, you will need to follow the instructions in this guide.

For technical assistance, contact your Distributor/VAR/Reseller for service.

For further assistance, contact the Printronix Customer Support Center.

The Customer Support Center offers technical support with:

- Installation
- Configuration and Setup
- Operation and Supplies Loading
- Specifications of Proper Print Media and Ribbons
- Answers to Post-Sales Service Support Questions

Printronix Customer Support Center contact information:

Americas	(714) 368-2686
Europe, Middle East, and Africa	(31) 24 6489 410
Asia Pacific	(65) 6548 4114

Web site: http://www.printronix.com/public/servicessupport/default.aspx

Genuine Printronix Supplies:

Americas	(800) 733-1900
Europe, Middle East, and Africa	(33) 1 46 25 1900
Asia Pacific	(65) 6548 4116 or (65) 6548 4182

Web site: http://www.printronix.com/public/supplies/default.aspx

Or visit the Printronix web site at www.printronix.com

SL5000r and T5000r
RFID Smart Label and Thermal Printers

Quick Setup Guide

PRINTRONIX®

Software License Agreement

CAREFULLY READ THE FOLLOWING TERMS AND CONDITIONS BEFORE USING THIS PRINTER. USING THIS PRINTER INDICATES YOUR ACCEPTANCE OF THESE TERMS AND CONDITIONS. IF YOU DO NOT AGREE TO THESE TERMS AND CONDITIONS, PROMPTLY RETURN THE PRINTER AND ALL ACCOMPANYING HARDWARE AND WRITTEN MATERIALS TO THE PLACE YOU OBTAINED THEM, AND YOUR MONEY WILL BE REFUNDED.

Definitions.

“Software” shall mean the digitally encoded, machine-readable data and program. The term “Software Product” includes the Software resident in the printer and its documentation. The Software Product is licensed (not sold) to you, and Printronix, Inc. either owns or licenses from other vendors who own, all copyright, trade secret, patent and other proprietary rights in the Software Product.

License.

1. Authorized Use. You agree to accept a non-exclusive license to use the Software resident in the printer solely for your own customary business or personal purposes.
2. Restrictions.
   a. To protect the proprietary rights of Printronix, Inc., you agree to maintain the Software Product and other proprietary information concerning the typefaces in strict confidence.
   b. You agree not to duplicate or copy the Software Product.
   c. You shall not sublicense, sell, lease, or otherwise transfer all or any portion of the Software Product separate from the printer, without the prior written consent of Printronix, Inc.
   d. You may not modify or prepare derivative works of the Software Product.
   e. You may not transmit the Software Product over a network, by telephone, or electronically using any means; or reverse engineer, decompile or disassemble the Software.
   f. You agree to keep confidential and use your best efforts to prevent and protect the contents of the Software Product from unauthorized disclosure or use.
3. Transfer. You may transfer the Software Product with the printer, but only if the recipient agrees to accept the terms and conditions of this Agreement. Your license is automatically terminated if you transfer the Software Product and printer.

Limited Software Product Warranty

Printronix, Inc. warrants that for ninety (90) days after delivery, the Software will perform in accordance with specifications published by Printronix, Inc. Printronix, Inc. does not warrant that the Software is free from all bugs, errors and omissions.

Remedy

Your exclusive remedy and the sole liability of Printronix, Inc. in connection with the Software is replacement of defective software with a copy of the same version and revision level.

Disclaimer of Warranties and Limitation of Remedies

1. THE PARTIES AGREE THAT ALL OTHER WARRANTIES, EXPRESS OR IMPLIED, INCLUDING WARRANTIES OF FITNESS FOR A PARTICULAR PURPOSE AND MERCHANTABILITY ARE EXCLUDED.
   Printronix, Inc. does not warrant that the functions contained in the Software will meet your requirements or that the operation of the Software will be uninterrupted or error free.
   Printronix, Inc. reserves the right to make changes and/or improvements in the Software without notice at any time.

2. IN NO EVENT WILL PRINTRONIX, INC. BE LIABLE FOR LOST PROFITS, LOST DATA, BUSINESS INTERRUPTIONS, OR ANY OTHER DIRECT, INDIRECT, INCIDENTAL OR CONSEQUENTIAL DAMAGES ARISING OUT OF THE USE OF OR INABILITY TO USE THIS PRODUCT, EVEN IF PRINTRONIX, INC. HAS BEEN ADVISED OF THE POSSIBILITY OF SUCH DAMAGES, OR ANY DAMAGES CAUSED BY THE ABUSE OR MANIPULATION OF THE SOFTWARE. SOME STATES DO NOT ALLOW THE EXCLUSION OR LIMITATION OF LIABILITY FOR CONSEQUENTIAL OR INCIDENTAL DAMAGES, SO THE ABOVE LIMITATION MAY NOT APPLY TO YOU.
3. Printronix, Inc. will not be liable for any loss or damage caused by delay in furnishing a Software Product or any other performance under this Agreement.
4. Our entire liability and your exclusive remedies for our liability of any kind (including liability for negligence except liability for personal injury caused solely by our negligence) for the Software Product covered by this Agreement and all other performance or nonperformance by us under or related to this Agreement are limited to the remedies specified by this Agreement.
5. California law governs this Agreement.

Termination of License Agreement

This License shall continue until terminated. This license may be terminated by agreement between you and Printronix, Inc. or by Printronix, Inc. if you fail to comply with the terms of this License and such failure is not corrected within thirty (30) days after notice. When this License is terminated, you shall return to the place you obtained them, the printer and all copies of the Software and documentation.

U.S. Government Restricted Rights

Use, duplication or disclosure by the Government is subject to restrictions as set forth in the Rights in Technical Data and Computer Software clause at FAR 242.227-7013, subdivision (b) (3) (ii) or subparagraph (c) (1) (ii), as appropriate. Further use, duplication or disclosure is subject to restrictions applicable to restricted rights software as set forth in FAR 52.227-19 (c) (2).

Acknowledgement of Terms and Conditions

YOU ACKNOWLEDGE THAT YOU HAVE READ THIS AGREEMENT, UNDERSTAND IT, AND AGREE TO BE BOUND BY ITS TERMS AND CONDITIONS. NEITHER PARTY SHALL BE BOUND BY ANY STATEMENT OR REPRESENTATION NOT CONTAINED IN THIS AGREEMENT. NO CHANGE IN THIS AGREEMENT IS EFFECTIVE UNLESS WRITTEN AND SIGNED BY PROPERLY AUTHORIZED REPRESENTATIVES OF EACH PARTY. BY USING THIS PRINTER, YOU AGREE TO ACCEPT THE TERMS AND CONDITIONS OF THIS AGREEMENT.

Communication Notices

This equipment has been tested and found to comply with the limits for a Class B digital device, pursuant to Part 15 of the FCC Rules. These limits are designed to provide reasonable protection against harmful interference in a residential installation. This equipment generates, uses, and can radiate radio frequency energy and, if not installed and used in accordance with the instructions, may cause harmful interference to radio communications. However, there is no guarantee that interference will not occur in a particular installation. If this equipment does cause harmful interference to radio or television reception, which can be determined by turning the equipment off and on, the user is encouraged to try to correct the interference by one or more of the following measures:

- Reorient or relocate the receiving antenna.
- Increase the separation between the equipment and receiver.
- Connect the equipment into an outlet on a circuit different from that to which the receiver is connected.
- Consult the dealer or an experienced radio/TV technician for help.

Properly shielded and grounded cables and connectors must be used in order to meet FCC emission limits. Printronix is not responsible for any radio or television interference caused by using other than recommended cables and connectors or by any unauthorized changes or modifications to this equipment. Unauthorized changes or modifications could void the user's authority to operate the equipment.

This device complies with part 15 of the FCC Rules. Operation is subject to the following two conditions: (1) this device may not cause harmful interference, and (2) this device must accept any interference received, including interference that may cause undesired operation.

Any change or modification to this product voids the user's authority to operate it per FCC Part 15 Subpart A Section 15.21 regulations.

CAUTION: This product should be positioned so that personnel in the area for prolonged periods may safely remain at least 23 cm (9 in) from the readers antenna surface in an uncontrolled environment. See FCC OET Bulletin 56 "Hazards of radio frequency and electromagnetic fields."

This product contains an intentional radiator with the following parameters:
Operating Frequency: 902 to 928 MHz
Typical RF Power: 25 to 100 milliwatts (SL5x04 MP) or 25 to 205 milliwatts (SL5x04 C1)
Maximum RF Power: 1 Watt under abnormal conditions

Printronix SL5000r and T5000r

Tested To Comply
With FCC Standards

FOR HOME OR OFFICE USE

Canada

This Class B digital apparatus complies with Canadian ICES-003 and RSS 210.

Cet appareil numérique de la classe B est conforme à la norme NMB-003 du Canada.

CE Notice (European Union)

Marking by the CE symbol indicates compliance of this Printronix system to the EMC Directive and the Low Voltage Directive of the European Union. Such marking is indicative that this Printronix system meets the following technical standards:

- EN 300 220-1 (2000), Electromagnetic Compatibility and Radio Spectrum Matters; Short Range Devices; Radio equipment to be used in the 25 MHz to 1000 MHz frequency range with power levels ranging up to 500 mW.
- EN 55022 — “Limits and Methods of Measurement of Radio Interference Characteristics of Information Technology Equipment.”
- EN 50082-1: 1992 — “Electromagnetic compatibility—Generic immunity standard Part 1: Residential, commercial, and light industry.”
- EN 60950 — “Safety of Information Technology Equipment.”

This printer is a Class B product for use in a typical Class B domestic environment.

CE Symbol

CE

Declaration Of Conformity

Manufacturer:	Printronix, Inc. 14600 Myford Rd. Irvine, CA 92623 U.S.A.

declares that the product:

Product Type:	Information Technology Equipment, Printer
Equipment Class:	Commercial and Light Industrial
Model Numbers:	T5204r, T5304r, SL5204r, SL5304r, 5504-R40 with optional suffixes
Configuration:	serial, parallel, coax, twinax, external LAN, Ethernet, Wireless Ethernet, RFID

conforms to the following standards:

Safety:	EN 60950-1: 2001, First Edition
EMC:	ETSI EN 301 489-1 ETSI EN 301 489-3 ETSI EN300 220 V1.3.1 Sec. 8.1, 8.2, 8.6, 8.7, 8.9 EN 55022: 1998 +A1 Class B EN 55024: 1998 EN 61000-4-2 EN 61000-4-3 EN 61000-4-4 EN 61000-4-5 EN 61000-4-6 EN 61000-4-8 EN 61000-4-11 EN 61000-3-2: 2000 EN 61000-3-3: 1995 +A1

and complies with:

The Low Voltage Directive 73/23/EEC and the EMC Directive 89/336/EEC.

Taiwan

乙類

此設備經測試證明符合 BSMI(經濟部標準檢驗局)之乙類數位裝置的限制規定。這些限制的目的是爲了在住宅區安裝時，能防止有害的干擾，提供合理的保護。此設備會產生、使用並散發射頻能量；如果未遵照製造廠商的指導手冊來安裝和使用，可能會干擾無線電通訊。但是，這並不保證在個別的安裝中不會產生干擾。您可以透過關閉和開啓此設備來判斷它是否會對廣播和電視收訊造成干擾；如果確實如此，我們建議您嘗試以下列一種或多種方法來排除干擾：

- 重新調整天線的接收方向或重新放置接收天線。
- 增加設備與接收器的距離。
- 將設備連接至不同的插座，使設備與接收器連接在不同的電路上。
- 請向經銷商或有經驗的無線電／電視技術人員查詢，以獲得幫助。

Lithium Battery Warning

The controller board contains a lithium battery sealed inside the real-time clock chip. Do not disassemble the chip to replace the battery. Do not dispose of the chip by incineration. Failure to comply may cause the battery to explode. Contact your local waste agency for the correct disposal procedure.

廢電池請回收

Printronix makes no representations or warranties of any kind regarding this material, including, but not limited to, implied warranties of merchantability and fitness for a particular purpose. Printronix shall not be held responsible for errors contained herein or any omissions from this material or for any damages, whether direct, indirect, incidental or consequential, in connection with the furnishing, distribution, performance or use of this material. The information in this manual is subject to change without notice.

This document contains proprietary information protected by copyright. No part of this document may be reproduced, copied, translated or incorporated in any other material in any form or by any means, whether manual, graphic, electronic, mechanical or otherwise, without the prior written consent of Printronix.

COPYRIGHT © 2005 PRINTRONIX, INC. All rights reserved.

Trademark Acknowledgements

Printronix and PGL are registered trademarks of Printronix, Inc.

SL5000r and T5000r are trademarks of Printronix, Inc.

Table of Contents

Unpacking And Installing The Printer 11
- Unpacking The Printer 11
- Removing The Internal Packing Material 12
- Installation 13

Controls And Indicators 14
- Power Switch 14
- Control Panel 14

Loading Media And Ribbon 18
- Loading Roll Media 19
- Loading Ribbon 24

Printing Adjustments 27
- Printhead Pressure Adjustment 27
- Printhead Pressure Block Adjustments 27
- Positioning The Media Sensors 28

Calibrating The Printer 30
- Running Auto Calibrate 30
- Making A Media Profile Printout 32

Changing The Active IGP Emulation 37

Configuring The Printer 37

QUICK SETUP Menu 38
- QUICK SETUP Menu Items 40

Saving The Configuration 50

Selecting The Power-Up Configuration 50

Loading A Saved Configuration 50

Run A Barcode Demo Test 51

Cleaning 52
- Exterior 52
- Interior 52
- General Cleaning 52
- Cleaning The Printhead, Platen Roller, And Media Sensors 52

Repacking The Printer 56

For More Information 58

Table of Contents

Unpacking And Installing The Printer

NOTE: This *Quick Setup Guide* covers both the SL5000r and T5000r printers.

The SL5000r is a smart label printer: it is equipped with an RFID encoder and has the “RFID Smart” logo near the control panel.

The 4 and 6 inch T5000r printers do not come equipped with RFID encoders, but are field upgradable to SL5000r printers.

The 8 inch T5000r printer is currently not RFID compatible.

Unpacking The Printer

The printer is shipped in a carton and protective bag. Keep all packing material in case shipping is required.

CAUTION **Avoid touching the electrical connectors to prevent electrostatic discharge damage while setting up the printer. The discharge of accumulated electrostatic energy can damage or destroy the printhead or electronic components used in this device.**

CAUTION **Do not place the printer on its backside during unpacking or handling, because damage to the printer interface connector may occur.**

Removing The Internal Packing Material

Remove the tape strips and foam pads from the printer as indicated below. (The top lid of the shipping carton also displays these instructions.)

NOTE: Save the foam pads for repacking the printer.

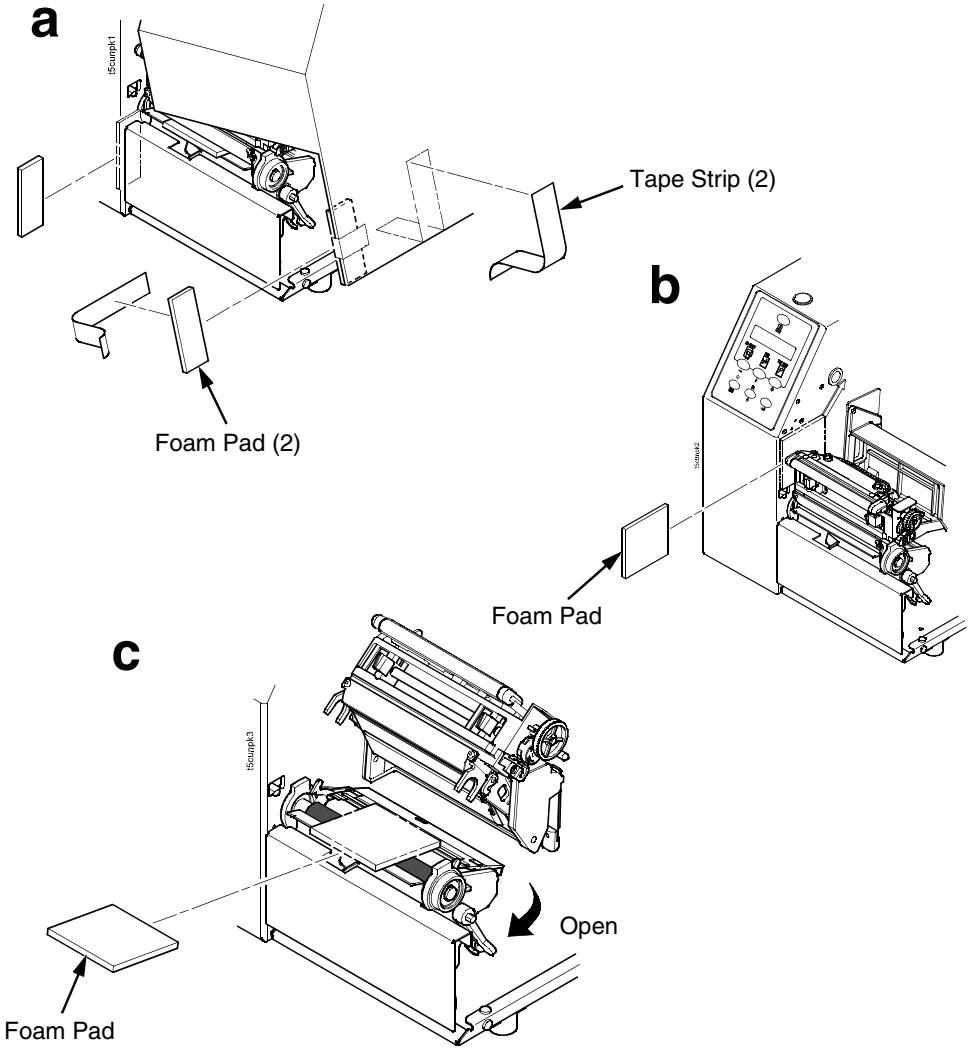

Installation

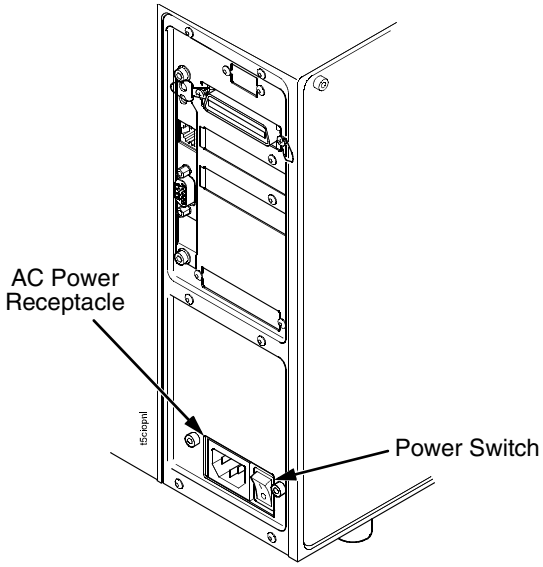

1. Place the printer on a flat level surface that allows easy access to all sides of the printer.

CAUTION **Never operate the printer on its side or upside down.**

2. Make sure the printer power switch is in the Off (O) position.

WARNING **Failure to properly ground the printer may result in electric shock to the operator.**

In compliance with international safety standards, this printer has been equipped with a three-pronged power cord. Do not use adapter plugs or remove the grounding prong from the cable plug. If an extension cord is required, ensure that a three-wire cable with a properly grounded plug is used.

3. Attach the AC power cord to the AC power receptacle in the back of the printer.

CAUTION **Verify the required voltage on the printer's model number label on the back of the printer.**

4. Attach the AC power cord to a grounded (three prong) electrical outlet of the proper voltage.

Controls And Indicators

Power Switch

The power switch is located on the bottom back panel of the printer. To apply power, place the switch in the I (On) position. When you first power on the printer, a series of initialization messages appears on the Liquid Crystal Display (LCD) on the control panel.

To remove power, place the power switch in the O (Off) position.

Control Panel

The control panel is located on the front of the printer and includes an LCD, indicators, and control keys (buttons). These are described in the following tables.

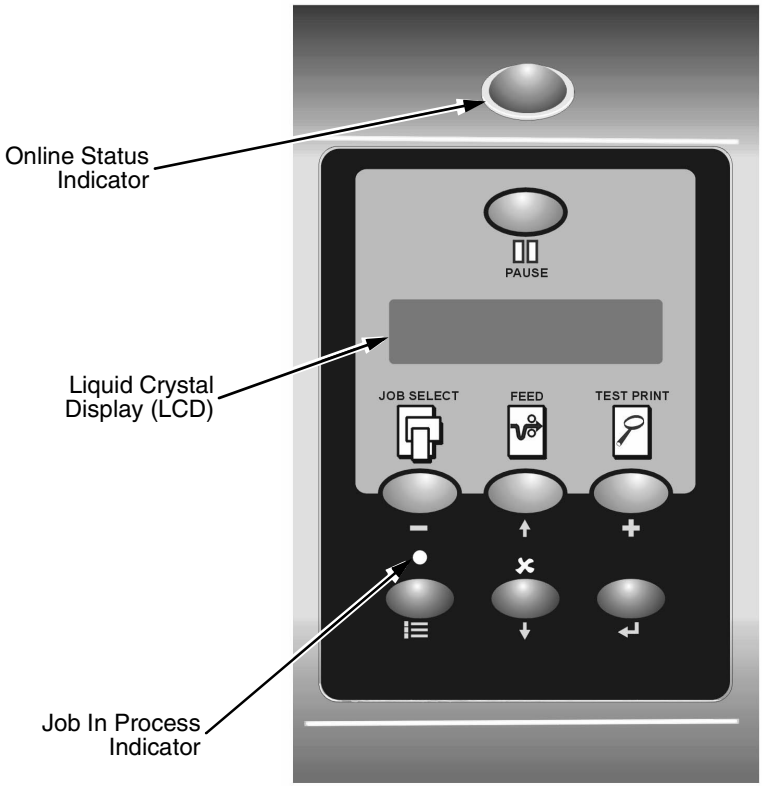

Status And Display Indicators

Indicator	Description	Function in Online Mode	Function in Offline Mode	Function in Menu Mode
Online Status	Indicates when the printer is online, offline, or when there is a fault condition.	Stays lit when the printer is online, ready to print, and accept data from the host. Flashes during a fault condition.	Off when the printer is offline. Flashes during a fault condition.	Off. Flashes during a fault condition.
Liquid Crystal Display (LCD)	A backlighted liquid crystal display with two rows of 16 characters each.	Displays “ONLINE,” the interface type, and emulation in use. During a fault condition, displays the specific fault message and the corrective action.	Displays “OFFLINE.” During a fault condition, displays the specific fault message and the corrective action.	Displays “OFFLINE” and a main menu, submenu, or option. During a fault condition, displays the specific fault message and the corrective action.
Job In Process	Indicates when the printer is receiving or processing data.	Flashes when receiving data. Stays lit when data has been processed and is waiting to be printed. Off when no data is being received or when no data remains in the buffer.	Flashes when receiving data. Stays lit when data has been processed and is waiting to be printed. Off when no data is being received or when no data remains in the buffer.	None

Control Panel Keys

Button	Description	Function in Online Mode	Function in Offline Mode	Function in Menu Mode
PAUSE	**PAUSE Key** Toggles the printer between Online and Offline modes.	Sets printer to Offline mode.	Sets printer to Online mode.	Sets printer to Offline mode.
JOB SELECT —	**JOB SELECT Key** **DECREMENT Key in Menu mode**	None	Displays the name and number of the last loaded configuration and allows you to load the factory and/ or pre-stored printer configurations.	Scrolls left through main menus. Decrements option values within submenus.
FEED ↑	**FEED Key** **UP Key in Menu mode**	Advances the media one label length.	Advances the media one label length.	Scrolls the current menu selection one level up.
TEST PRINT +	**TEST PRINT Key** Pressing the ↵ (ENTER) key with a Diagnostic Test displayed initiates the test. Pressing ↵ again terminates the test. **INCREMENT Key in Menu mode**	None	Scrolls through the Test Print patterns.	Scrolls right through main menus. Increments option values within submenus.

Control Panel Keys (cont.)

Button	Description	Function in Online Mode	Function in Offline Mode	Function in Menu Mode
✕ ↓	**CANCEL Key** When the CANCEL key is enabled, pressing it will clear all data in the printer buffer and prevent printing of that data. **Note:** The default = Disable. However, when the Coax/ Twinax Interface option is installed, the default = Enable. **DOWN Key in Menu mode**	None	Clears all data in the printer data buffer when enabled.	Scrolls the current menu selection one level down.
☰	**MENU Key**	Takes the printer Offline and selects the Menu mode.	Selects the Menu mode.	Scrolls between main menu selections.
↵	**ENTER Key** Pressing the ↵ (ENTER) key in Menu mode selects the displayed option or value. An asterisk then appears next to the option or value indicating it has been selected. **Note:** If the ENTER key is locked, “ENTER SWITCH LOCKED” displays on the LCD for one second. Press the ↓ (DOWN) and ↵ (ENTER) keys at the same time to unlock the ENTER key.	None	None	Selects the current menu value and displays an asterisk (*) next to the value.

Loading Media And Ribbon

IMPORTANT **Printronix recommends using the supplied starter roll of 100 labels to set up and verify printer operation. If you have an SL5000r, this will avoid expending the more expensive smart labels for this task.**

CAUTION **DO NOT TOUCH the printhead or the electronic components under the printhead assembly.**

CAUTION **Do not close the pivoting deck without label stock installed between the printhead and the platen, because debris on the platen may damage the printhead.**

Loading Roll Media

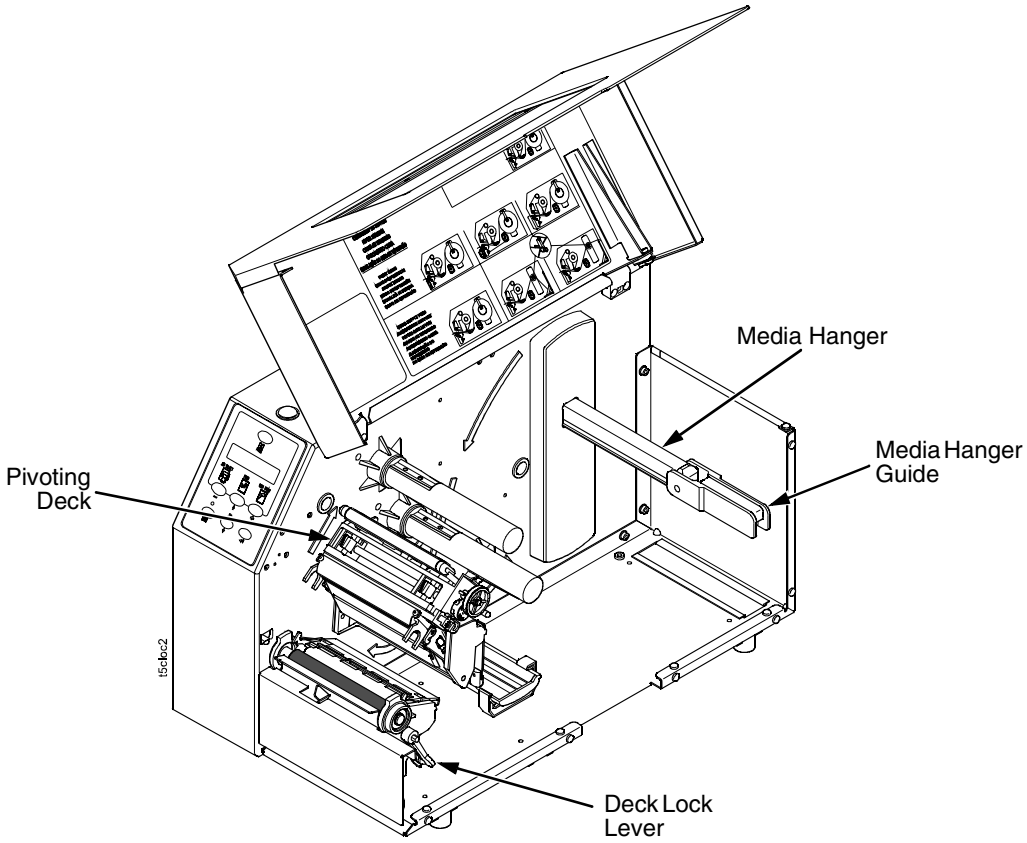

IMPORTANT **If you are using direct thermal mode, clean the printhead, platen roller, and upper and lower media sensors every time you change the media. See “Cleaning” on page 52.**

1. Slide the media hanger guide outward to the end of the media hanger, and flip it up into the horizontal position (as shown).
2. Open the pivoting deck by rotating the deck lock lever fully clockwise.

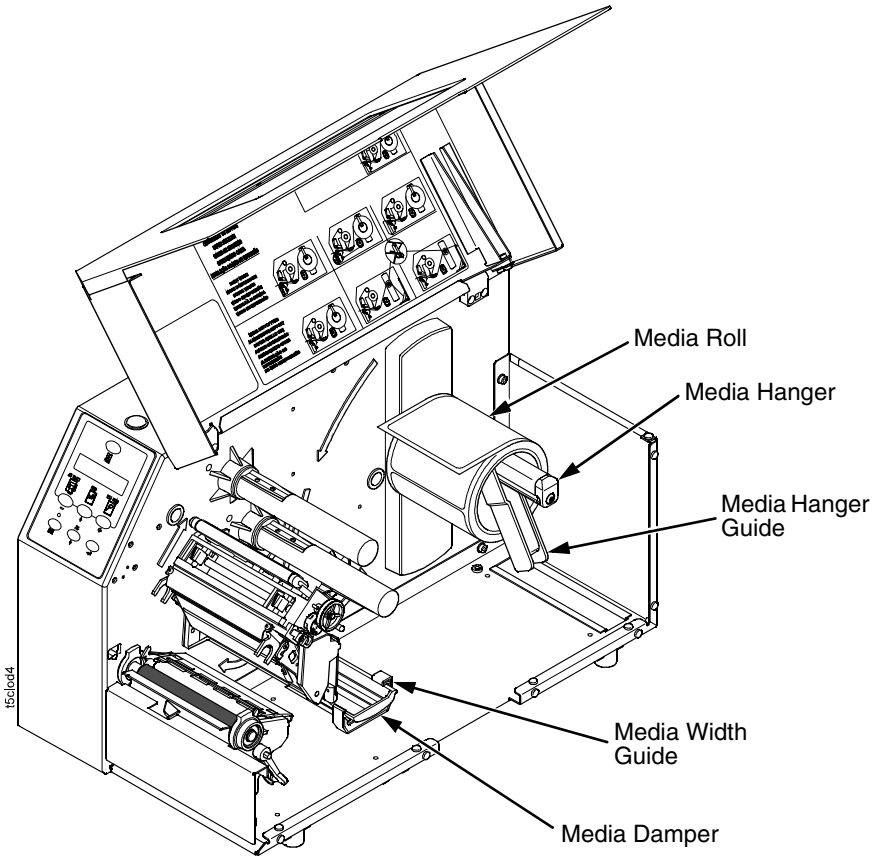

3. Slide the media width guide close to the outside end of the media damper.
4. Slide the supplied starter media roll onto and towards the back of the media hanger.
5. Place the media hanger guide under the media hanger and against the lower part of the label core at a 45 degree angle (as shown). This position provides the required tension for a new label roll and the desired drag for a partial label roll.

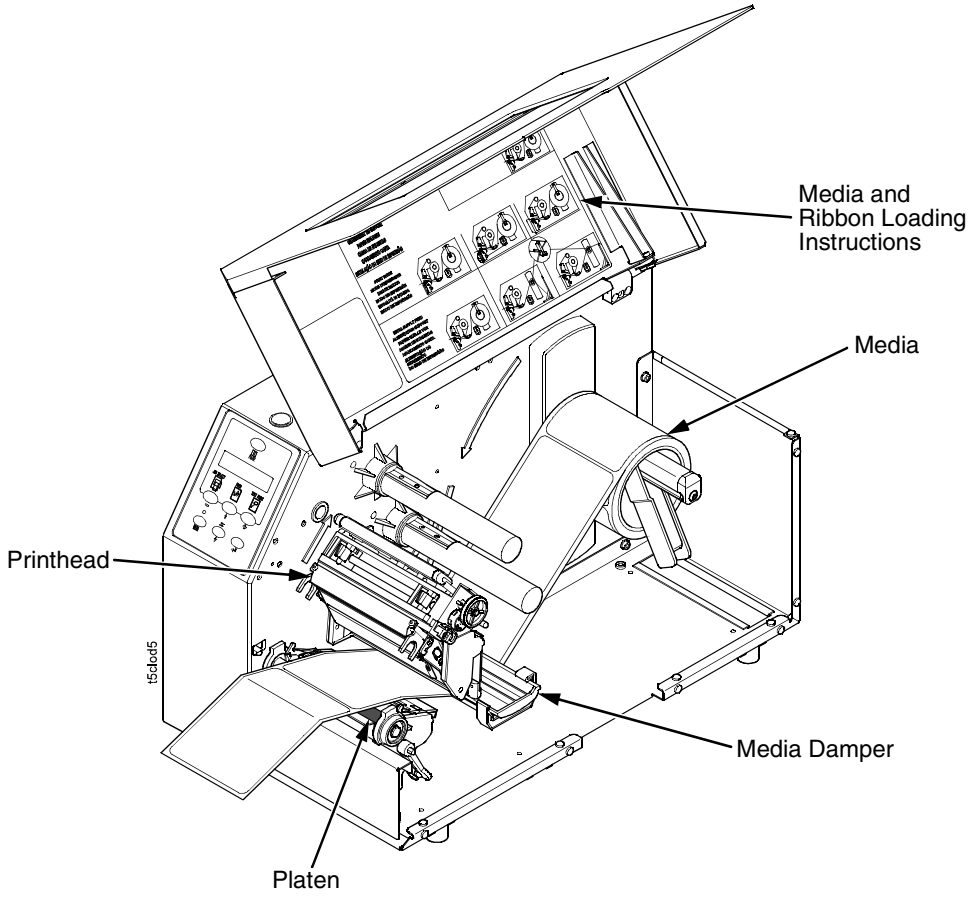

6. Thread the media under the media damper and then between the platen (rubber drive roller) and the printhead.

   You can also refer to the arrows on the printer frame or to the label inside the media cover for media loading instructions.

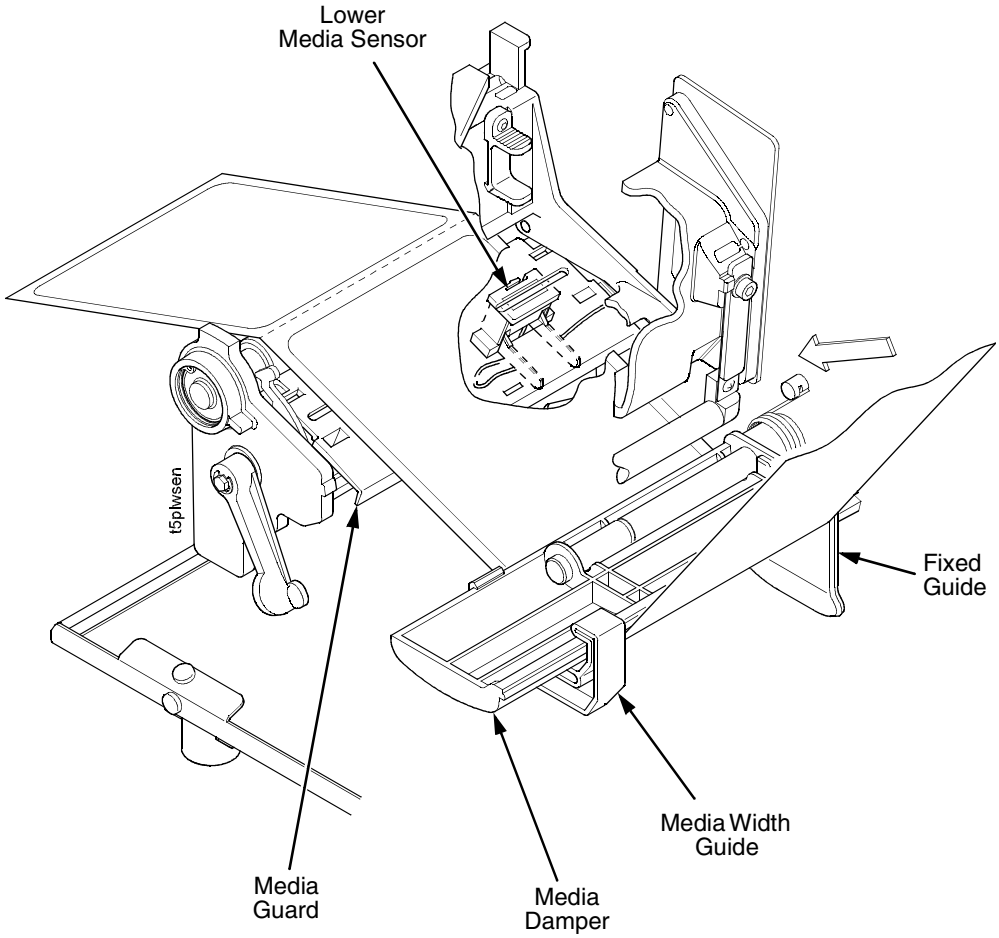

7. Verify that the left edge of the media is against the fixed guide on the bottom of the media damper.
8. Push the media width guide in until it is flush with the outer edge of the media.
9. Check the horizontal position of the lower media sensor (located under the media guard) and the upper media sensor (shown on page 27). (See “Positioning The Media Sensors” on page 28.)

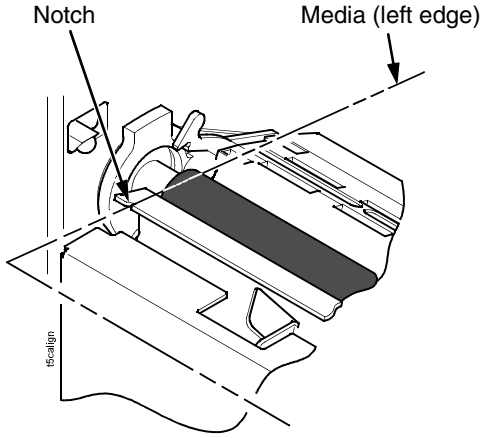

10. Align the left (inside) edge of the media with the notch located in the left front edge of the tear bar.

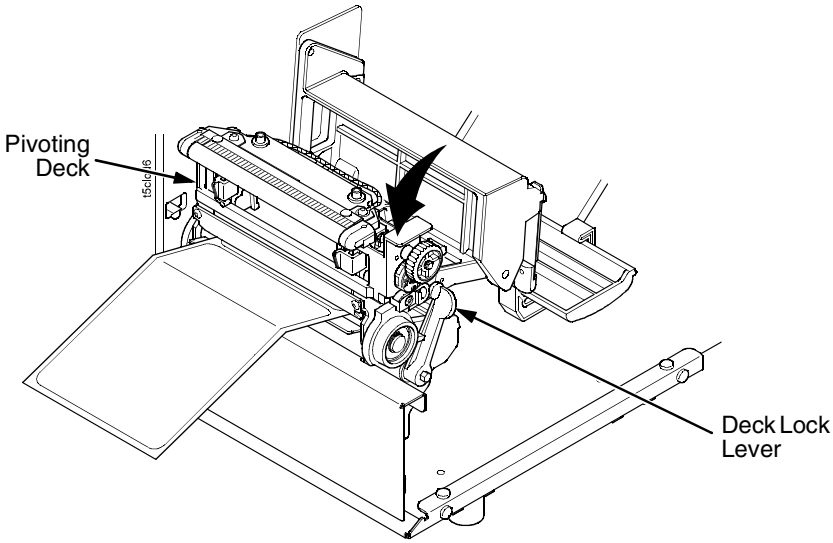

11. Close the printhead by pressing down on the pivoting deck and rotating the deck lock lever fully counterclockwise.
12. Power on the printer (place the power switch in the I position).

Loading Ribbon

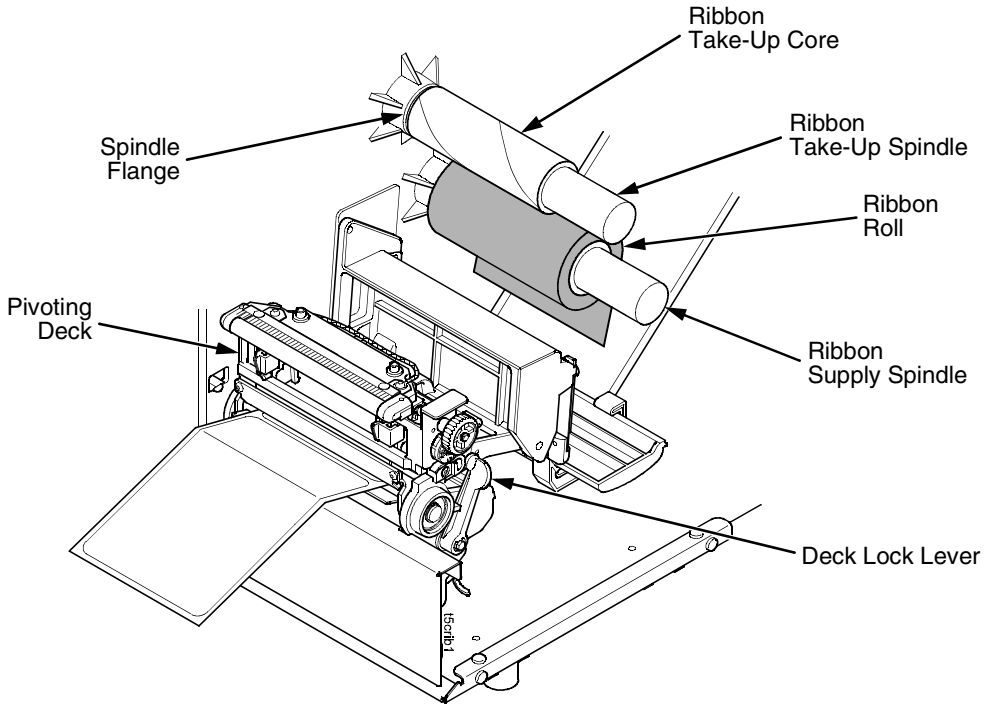

IMPORTANT **Clean the printhead, platen roller, and upper and lower media sensors every time you change the ribbon. See "Cleaning" on page 52.**

1. Install the ribbon take-up core on the ribbon take-up spindle.

NOTE: The first ribbon take-up core comes with the printer. Thereafter, use the core from the old (used up) ribbon.

2. Slide the ribbon roll onto the ribbon supply spindle until it stops against the spindle flange.
3. Open the pivoting deck by rotating the deck lock lever fully clockwise until the deck swings upward.

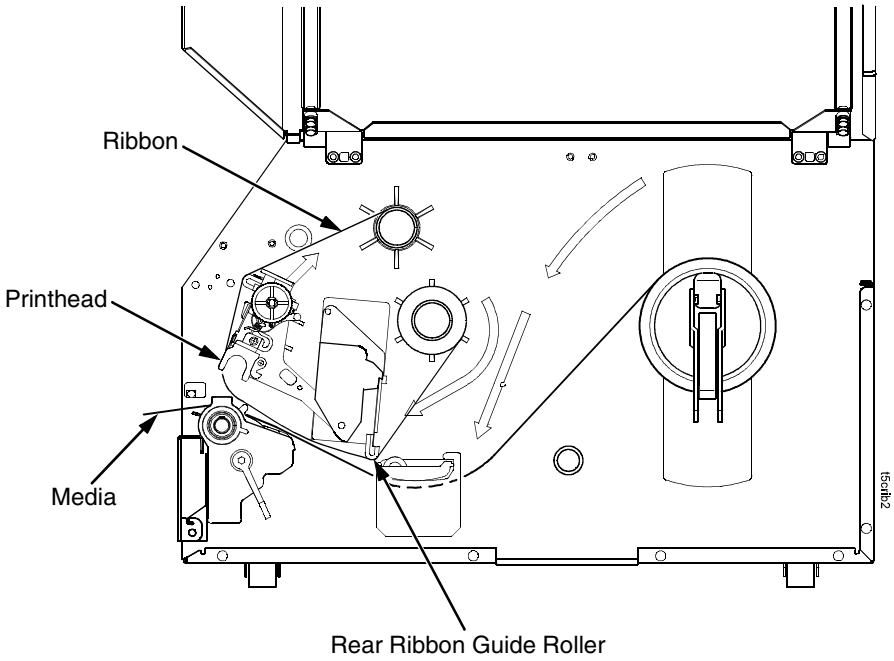

4. Thread the end of the ribbon under the rear ribbon guide roller, then between the platen and the printhead.

   You can also refer to the arrows on the printer frame or to the upper-right corner of the label inside the media cover for ribbon loading instructions.

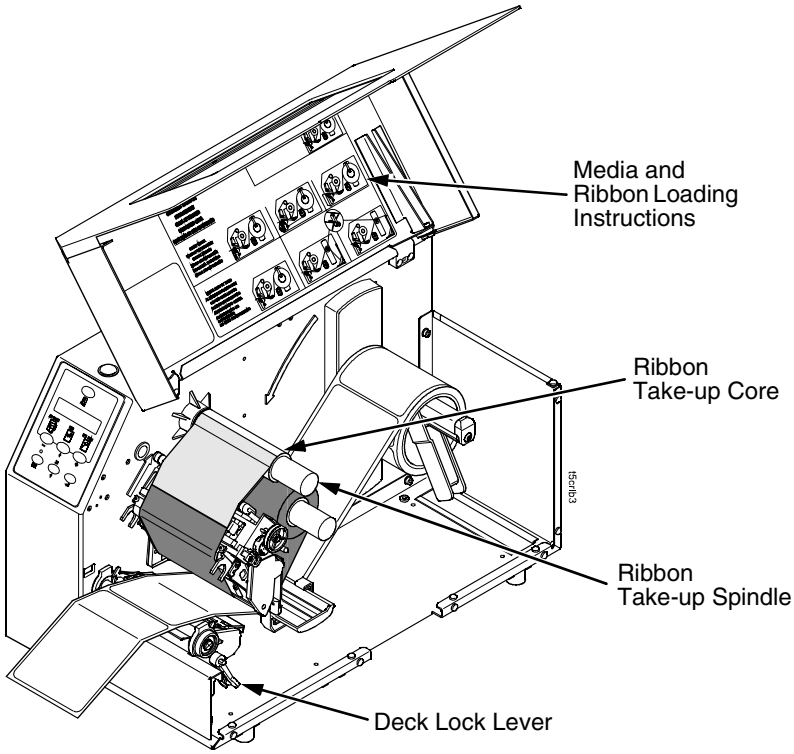

IMPORTANT **Do not attach the ribbon to the ribbon take-up spindle without a ribbon take-up core installed.**

5. Attach the ribbon to the ribbon take-up core on the ribbon take-up spindle using the adhesive on the ribbon leader.
6. Manually rotate the spindle clockwise until the clear leader has passed the printhead.
7. Close the pivoting deck and rotate the deck lock lever fully counterclockwise.

Printing Adjustments

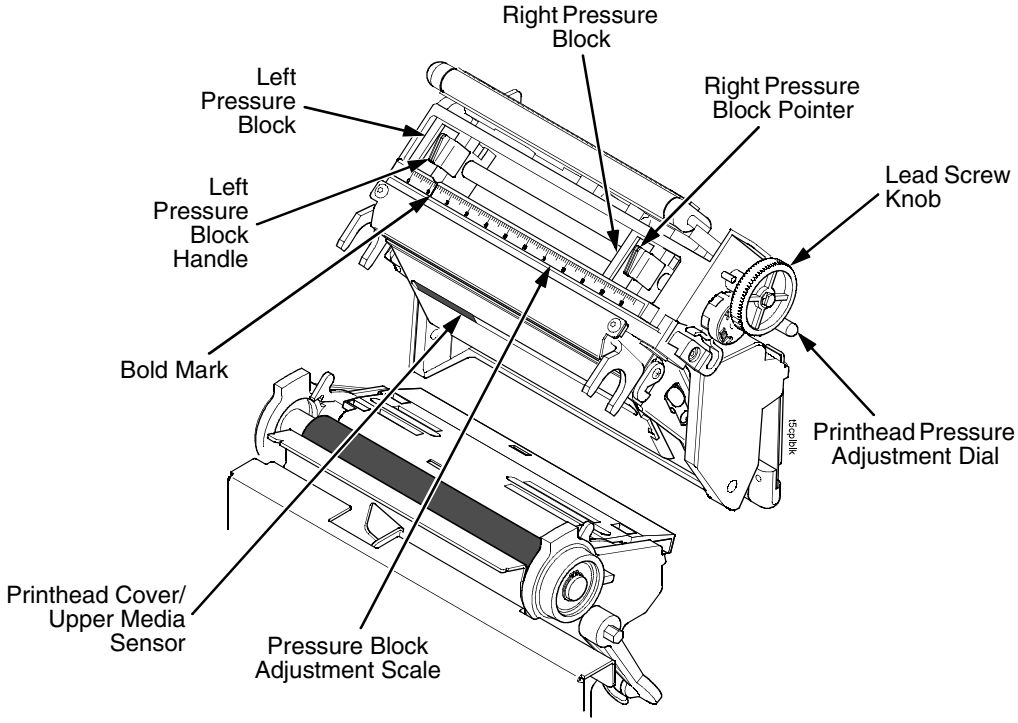

Printhead Pressure Adjustment

Adjust the printhead pressure to the setting of 4.

Printhead Pressure Block Adjustments

Left Pressure Block

Manually adjust the left pressure block so its handle is aligned with the bold mark on the pressure block adjustment scale.

Right Pressure Block

Use the lead screw knob to position the right pressure block with its pointer near the right edge of the media in use.

Positioning The Media Sensors

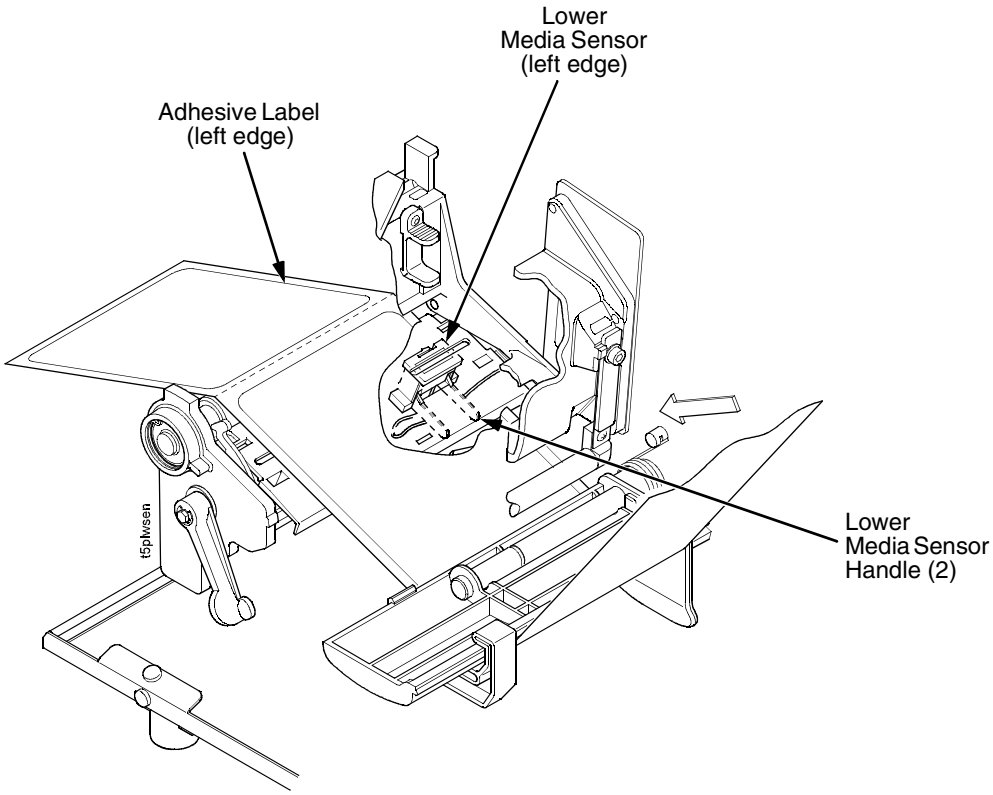

Your printer is equipped with upper and lower media sensors that detect the top-of-form position on media with label length indicators (black marks, gaps, notches, or holes). The media sensors also detect Paper Out conditions.

Use the handles on the lower media sensor to horizontally position it so that the left edge of the sensor's visible red LED is aligned under the left edge of the adhesive label of the installed media.

The upper media sensor, located in the slot under the printhead cover (see figure on page 27), should be located directly over the lower media sensor.

If you are using smart labels, the lower media sensor should not be placed in the path of media features that could cause false gap detection or paper out faults. Such features are dark pre-printing, rounded die cut label corners, and extraneous cut-outs.

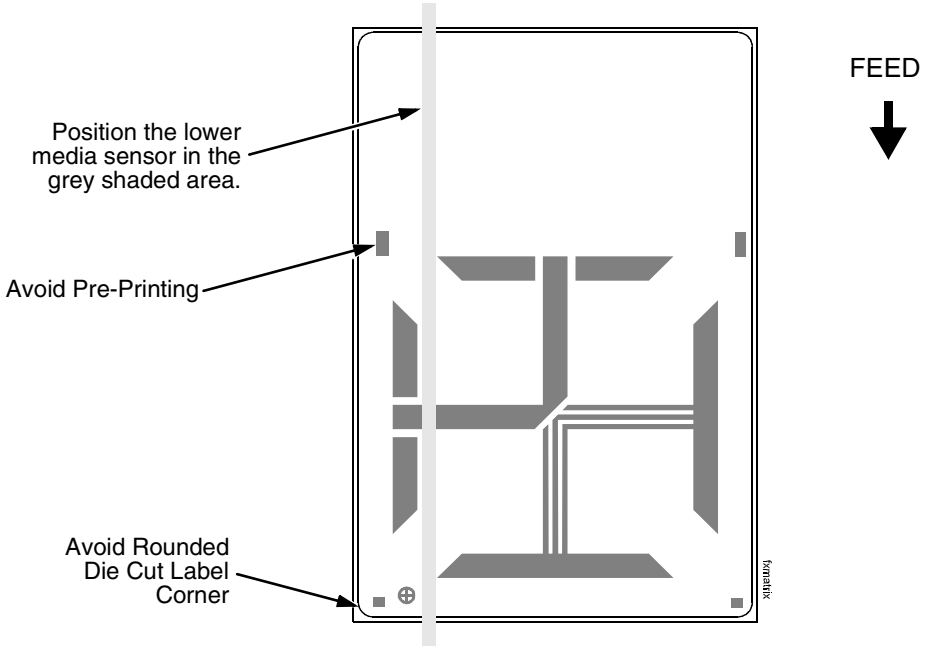

Calibrating The Printer

For printers not using smart labels, an Auto Calibrate should be sufficient to properly calibrate the printer (see next section).

To calibrate printers that are using smart labels:

1. Run an Auto Calibrate to set up initial values (page 30).
2. Make a Media Profile printout (page 32).
3. Make any necessary adjustments to Threshold Range in the CALIBRATE CTRL menu.
4. Run an Auto Calibrate again (page 30).
5. Make a Media Profile printout again (page 32) to verify the Threshold Range you selected in step 3 is correct.
6. Save the configuration, and then set the saved configuration as the Power-Up configuration (page 50).

Running Auto Calibrate

IMPORTANT **Since manufacturing differences in media and ribbon can decrease the printer's TOF (top-of-form) sensing reliability, you must run an Auto Calibrate to provide optimum sensor threshold values for the installed media and ribbon.**

1. Set the printer power switch to I (On). (For the location of the power switch and various panel keys, refer to "Controls And Indicators" on page 14.)
2. Press the ☰ key to enter the QUICK SETUP menu.

NOTE: For a complete description of the QUICK SETUP menu, see page 38.

3. Press ↓ and ↵ together until ENTER SWITCH / UNLOCKED displays.
4. Press ↑ or ↓ until Label Length / 6 inch* displays (default).

5. Press **+** or **–** until the value that matches the physical length of the installed media displays. See “Label Length” on page 42.

NOTE: Selecting the correct Label Length forces Auto Calibrate to increase media advancement for long labels (to detect actual gaps, notches, or marks) and decrease media advancement for short labels.

6. Press ↑ or ↓ until Gap/Mark Sensor / Disable* displays.
7. Press **+** or **–** until Gap displays.

NOTE: If you are using smart labels, see “Gap Sensing for Smart Labels” on page 46.

8. Press ↵. An asterisk (*) displays next to the selected item.
9. Press ↓ until Auto Calibrate / Run Calibrate displays.
10. Press ↵. Media advances until it can accurately detect the label length indicators and then stops at the top-of-form position. The Sensed Distance value then displays for one second.
11. Auto Calibrate is successful when the Sensed Distance value correctly matches that of the installed media. For Gap sensing, the Sensed Distance value is the physical length of one label plus the length of one gap.
12. If GAP NOT DETECTED or PAPER OUT displays:
    a. Check the horizontal position of the media sensors (page 28).
    b. Make a Media Profile printout to verify that the sensors are performing properly (page 32).
    c. Press **PAUSE** and run Auto Calibrate again.
13. Press the **PAUSE** key to take the printer offline.
14. Press the **FEED** key several times. Each time you press FEED, the media should advance one label length and stop.
15. Once the Sensed Distance value and performance is confirmed, save it to the desired configuration menu as described on page 50 before powering off the printer.

Making A Media Profile Printout

The Media Profile printout shows the relationship of the Paper Out Threshold and the Gap/Mark Threshold values, illustrates if and when each label length indicator is detected, and shows the difference between the label length indicators and the label. The profile printout (see figure on page 33) helps you set the thresholds for difficult media. This includes pre-printed labels, labels with poor gap/media dynamic range, and smart labels that have embedded RFID tags.

NOTE: Verify the CALIBRATE CTRL menu Gap/Mark Sensor option (Disable, Mark, Gap, Advanced Gap, or Advanced Notch) matches the installed media.

You will need a minimum installed label width of two inches to support the Media Profile printout.

Ensure the lower media sensor is horizontally positioned to permit sensing of the label length indicators. See “Positioning The Media Sensors” on page 28.

Ensure the Print Mode option selected in the QUICK SETUP menu matches the media installed. Select Direct for heat sensitive media (no ribbon required) or Transfer for thermal transfer media (ribbon required).

IMPORTANT **Once Media Profile is initiated, the printer will continue to advance media and print the profile in landscape orientation until you press ↵ to stop printing.**

1. Press the ☰ key to take the printer offline and into Menu mode.
2. Press ↓ and ↵ together until ENTER SWITCH / UNLOCKED displays.
3. Press ☰ until CALIBRATE CTRL displays.
4. Press ↓ until Media Profile / Profile Print displays and then press ↵.

   The printer will advance media and continue to print a dynamic profile image depicting the relationship of the label and any label length indicators detected.
5. Press ↵ to stop printing.

6. Press the **PAUSE** key until OFFLINE displays.

NOTE: The Gap/Mark and Paper Out Threshold values shown on the Media Profile printout represent the last values determined from a successful Auto Calibrate or the factory default values if no Auto Calibrate was performed.

Gap Sensing

This figure shows a Media Profile printout of a smart label where Gap/Mark Sensor is set to Gap in the CALIBRATE CTRL menu.

In this example, the gap threshold value the printer selected (represented by the Gap/Mark dotted line) is too close to the amplitude of the antenna pulse. This may cause the printer to falsely use the antenna as the gap (top-of-form).

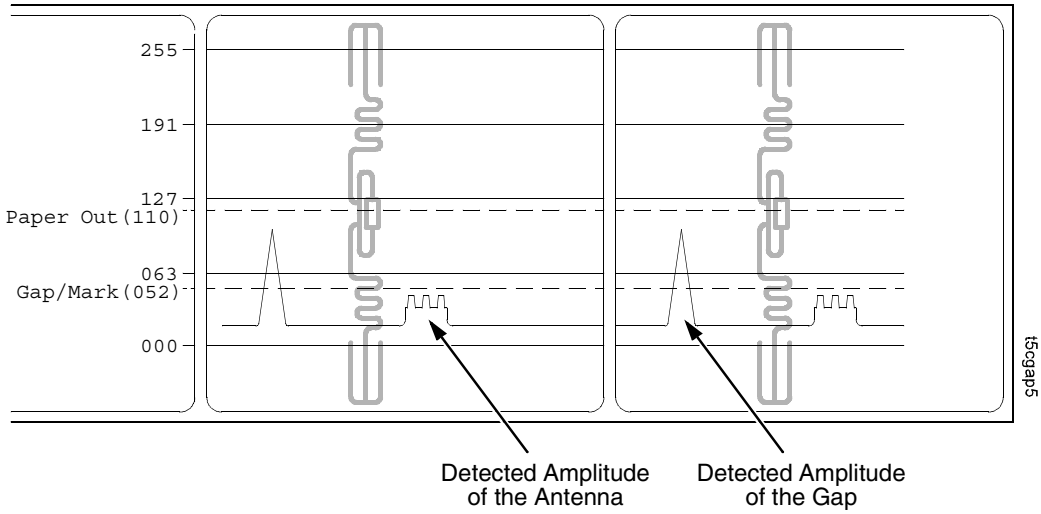

To avoid this problem, increase the Threshold Range value to 60% or 70% in the CALIBRATE CTRL menu (the default is 50%), then run an Auto Calibrate again (page 30).

NOTE: Any changes to Threshold Range will not take effect until you run an Auto Calibrate again.

This will raise the Gap/Mark threshold high enough so that the printer will not falsely use the antenna as the gap (top-of-form).

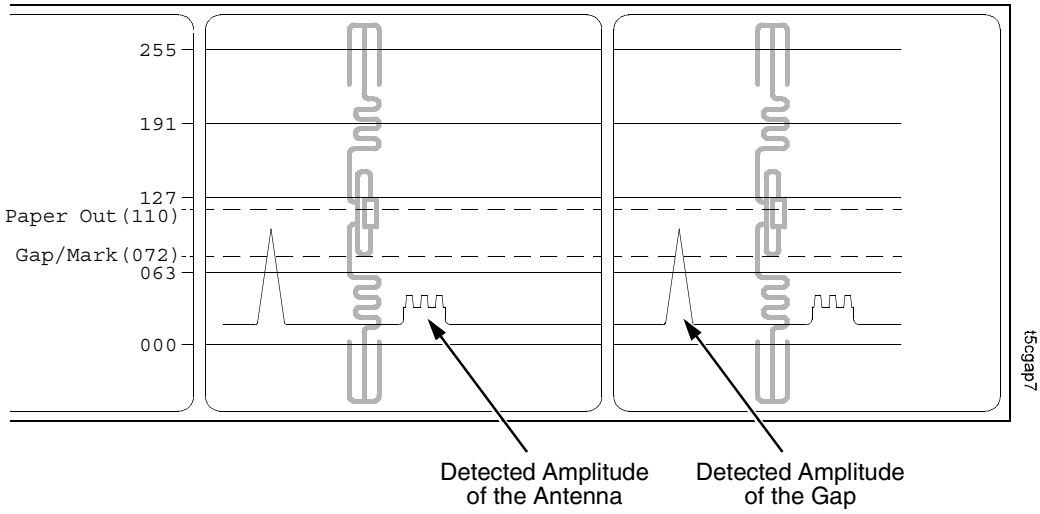

Advanced Gap Sensing

This figure shows a Media Profile printout of a smart label where Gap/Mark Sensor is set to Advanced Gap in the CALIBRATE CTRL menu.

In this example, the gap threshold value the printer selected (represented by the Gap/Mark dotted line) is too close to the amplitude of the antenna pulse. If there is an increase in noise or the opacity of the liner or ribbon, the printer may falsely use the antenna or noise as the gap (top-of-form).

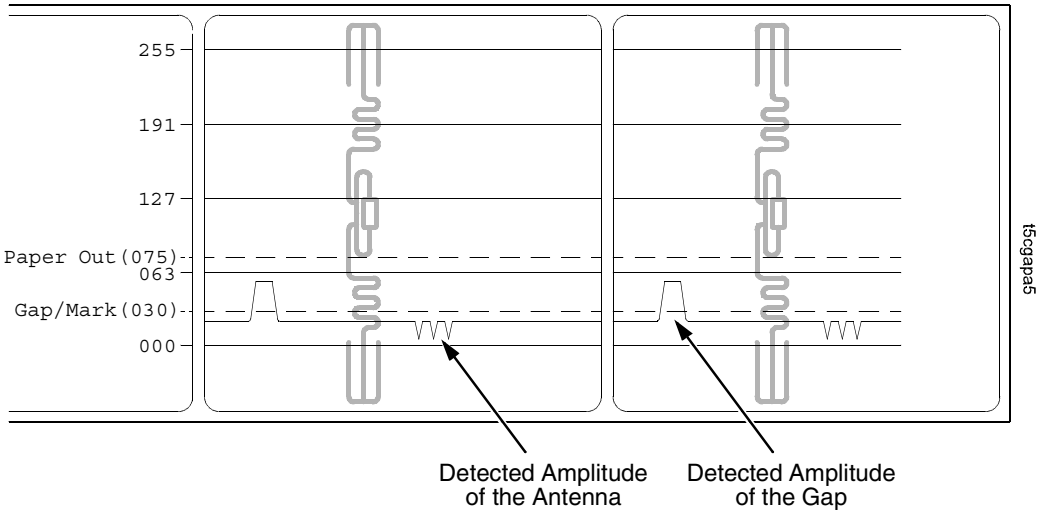

To avoid this problem, increase the Threshold Range value to 60% in the CALIBRATE CTRL menu (the default is 50%), then run an Auto Calibrate again (page 30).

NOTE: Any changes to Threshold Range will not take effect until you run an Auto Calibrate again.

This will raise the Gap/Mark threshold high enough so that the printer will not falsely use the antenna or noise as the gap (top-of-form).

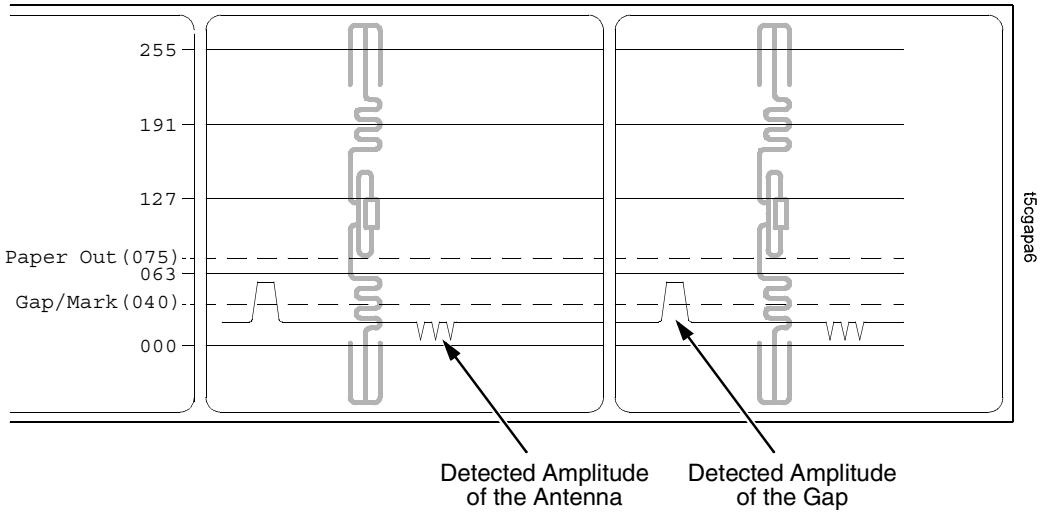

Changing The Active IGP Emulation

The following example shows how to change the active IGP emulation from IGP/PGL (default) to IGP/VGL using the QUICK SETUP menu.

1. Set the printer power switch to I (On).
2. Press the ☰ key to enter the QUICK SETUP menu.
3. Press ↓ and ↵ at the same time until ENTER SWITCH / UNLOCKED displays.
4. Press ↑ or ↓ until Active IGP Emul / IGP/PGL* displays.
5. Press → until IGP/VGL displays.

NOTE: You can also select PPI/ZGL, PPI/TGL, PPI/IGL or PPI/STGL as the active IGP emulation if they are available. The number of available emulations depends on the security key installed in the printer.

6. Press ↵. An asterisk (*) displays next to the selected emulation.
7. Press **PAUSE**. OFFLINE displays.
8. Save the configuration (see “Saving The Configuration” on page 50).

Configuring The Printer

The printer menu structure consists of main menus and menu items, and the options available for each menu item. Modifications to the menu items can be selected and saved using the control panel. See “Control Panel” on page 14 for information about control panel keys and navigating the menus.

When you press the ☰ (Menu) key, the QUICK SETUP menu displays first. This menu lists the most frequently accessed menu options.

QUICK SETUP Menu

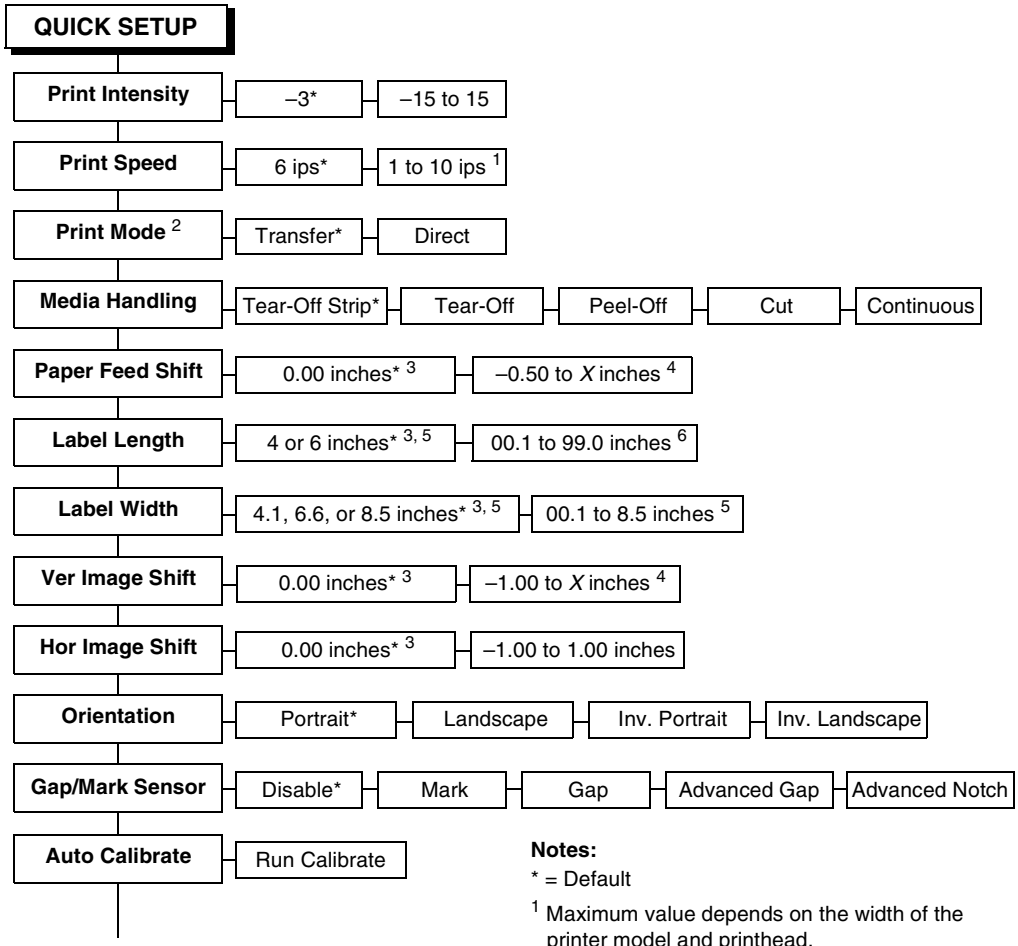

(cont. on next page)

Notes:

* = Default

[1] Maximum value depends on the width of the printer model and printhead.

[2] Does not appear for direct thermal only printers.

[3] You can change the unit value from inches to millimeters under Units (in MEDIA CONTROL) See the *User's Manual* for information.

[4] Based on the current value setting for the Label Length menu, up to a maximum of 12.80 inches.

[5] Maximum value depends on the width of the printer model.

[6] Maximum value depends on model width and size of DRAM installed.

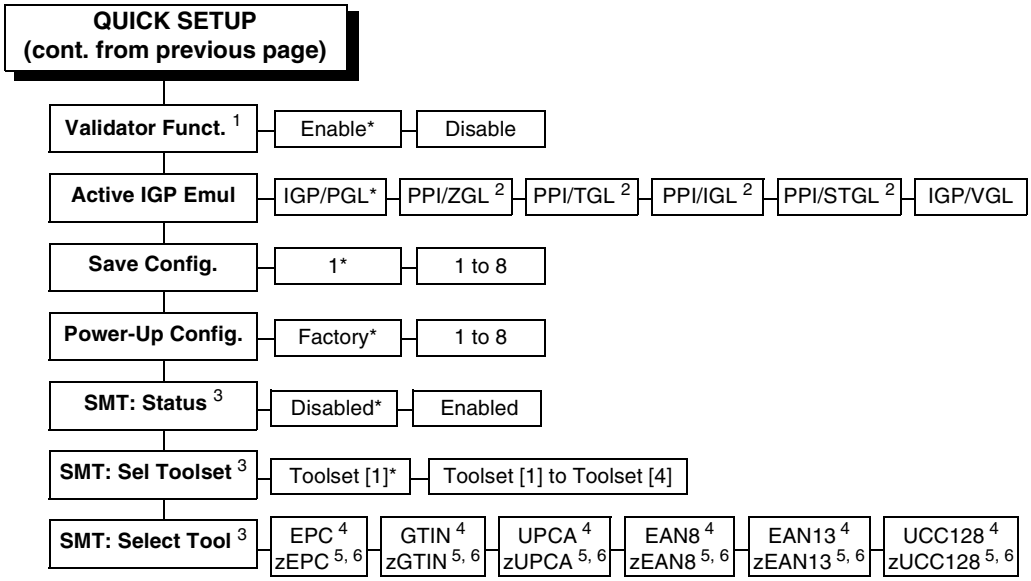

Notes:

* = Default.

[1] Appears only if a bar code validator is installed.

[2] Appears only if the correct security key for the PPI emulation is installed.

[3] Appears only if an RFID encoder is installed.

[4] Appears only if Toolset [1] is selected under SMT: Sel Toolset.

[5] Appears only if Toolset [2] is selected under SMT: Sel Toolset.

[6] Undocumented options are reserved for internal use and future design.

NOTE: Many QUICK SETUP menu items are available in other main menus. (Refer to the *User's Manual*.)

Changes made in the QUICK SETUP menu are updated in the other main menus, and vice versa.

QUICK SETUP Menu Items

Print Intensity

This menu item specifies the level of thermal energy from the printhead to be used for the type of media and ribbon installed.

Large numbers imply more heat (thermal energy) to be applied for each dot. This has a significant effect on print quality. The print intensity and speed must match the media and ribbon type to obtain the best possible print quality and barcode grades.

The range is –15 through +15. The default is –3.

Print Speed

This menu item specifies the speed in inches per second (ips) at which the media passes through the printer while printing.

The range is 2 through 10 ips (in increments of 1 ips).

The default is 6 ips.

NOTE: The maximum print speed varies based on maximum printer width and dot per inch (dpi) resolution of the printhead installed (203 or 300 dpi).

Print Mode

This menu item specifies the type of printing to be done.

- **Transfer**. Indicates thermal transfer printing (ribbon installed).
- **Direct**. Indicates direct thermal printing (no ribbon) and requires special heat sensitive media.

The default is Transfer, unless your printer is shipped as direct thermal only (no ribbon motors installed).

NOTE: The Print Mode menu item does not appear for direct thermal only printers.

Media Handling

This menu item specifies how the printer will handle the media (labels or tag stock).

- **Tear-Off Strip**. Printer prints on the media and sends it out the front until the print buffer is empty, then positions the last label over the tear bar for removal.
- **Tear-Off**. After each label is printed, the printer positions the label over the tear bar and waits for you to tear off the label before printing the next one (on-demand printing). A “Remove Label” message displays to remind you to remove the label before the next one can be printed.
- **Peel-Off**. When the optional rewinder is installed, prints and peels die cut labels from the liner without assistance. The printer waits for you to remove the label before printing the next one (on-demand printing). The label liner is rewound on the internal rewinder. A “Remove Label” message displays to remind you to remove the label before the next one can be printed.
- **Cut**. When the optional media cutter is installed, it automatically cuts media after each label is printed or can cut after a specified number of labels have been printed using a software cut command. It cuts continuous roll paper, labels, or tag stock.

NOTE: The Cut option is hidden when RFID Reader is set to Enable in the RFID CONTROL menu.

- **Continuous**. Printer prints on the media and sends it out the front.

The default is Tear-Off Strip.

Paper Feed Shift

This menu item represents the distance to advance a label (+ shift) or pull back (– shift) when the Tear-Off Strip, Tear-Off, Peel-Off, or Cut Media Handling option is enabled. The allowable range is –0.50 inches to the current Label Length value setting up to a maximum of 12.80 inches in 0.01 inch increments.

The default is 0.00 inches.

Label Length

In most applications, the user-selected Label Length will match the physical label length. Physical label length is the actual label length of the media installed. Following is a list of different media types:

- Die cut labels: measurable length of the removable label (leading edge to trailing edge). This does not include the liner material or gap.
- Tag stock with notches or holes: measurable length from the trailing edge of one notch or hole to the trailing edge of the next notch or hole.
- Tag stock with black marks on the underside: measurable length from the leading edge of one black mark to the leading edge of the next black mark.
- Continuous media (no label length indicators): measurable length should be within ± 1 to 2% of the Label Length value entered.

Label Width

This menu item specifies the label width. The allowable range in inches is 00.1 to the maximum print width of the printer. The allowable range in millimeters is 2.5 to the maximum width of the printer.

Ver Image Shift

This menu item specifies the amount to shift an image up (–) or down (+) for precise positioning on the label. The actual height of

the image is not affected by this parameter. The allowable range is –1.00 inches to the current Label Length value setting, up to a maximum of 12.80 inches, in 0.01 inch increments.

The default value is 0.00 inches.

Hor Image Shift

This menu item specifies the amount to shift an image left (–) or right (+) for precise positioning on the label. The actual width of the image is not affected by this parameter. The allowable range is –1.00 to +1.00 inches in 0.01 inch increments.

The default value is 0.00 inches.

Orientation

Specifies the image orientation to be used when printing the label.

- **Portrait**. The default. Portrait refers to vertical page orientation, where the height of a page is greater than its width. The top edge of the image is parallel to the leading edge of the media. The following example is viewed from the front of the printer.

NOTE: Portrait orientation applies to PGL® and VGL emulations. This is regarded as Inverse Portrait using PPI/ZGL.

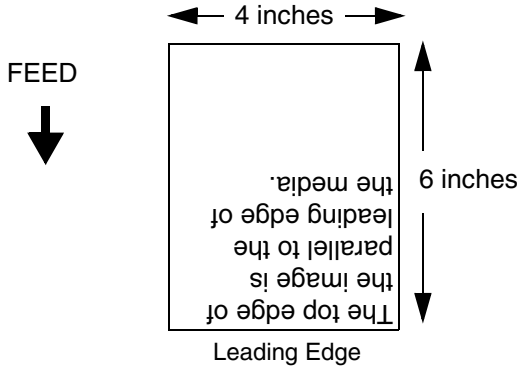

- **Landscape**. Landscape refers to horizontal orientation, where the width of a page is greater than its height. The top edge of the image is parallel to the left edge of the media. The following example is viewed from the front of the printer.

NOTE: Landscape orientation applies to PGL and VGL emulations. This is regarded as Inverse Landscape using PPI/ZGL.

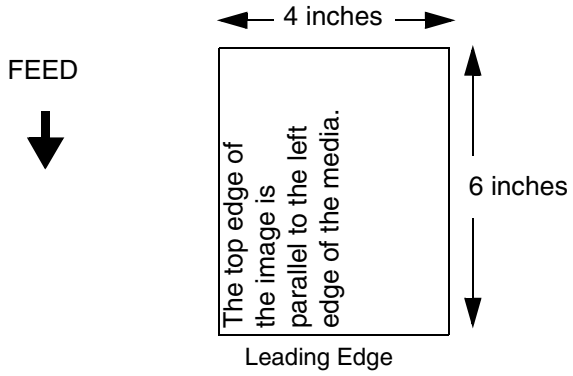

- **Inv. Portrait**. Inverse Portrait refers to vertical page orientation, where the height of a page is greater than its width. The top edge of the image is parallel to the trailing edge of the media. The following example is viewed from the front of the printer.

NOTE: Inverse Portrait orientation applies to PGL and VGL emulations. This is regarded as Portrait using PPI/ZGL.

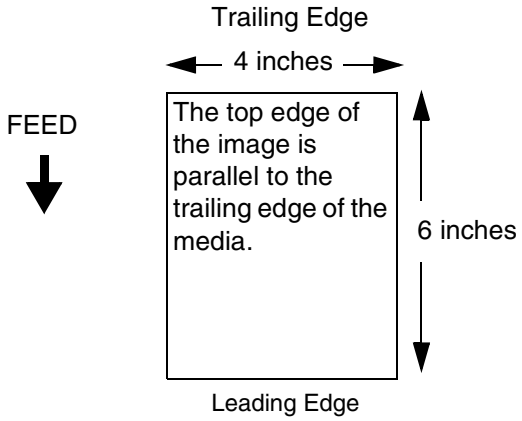

- **Inv. Landscape**. Inverse Landscape refers to horizontal orientation, where the width of a page is greater than its height. The top edge of the image is parallel to the right edge of the media. The following example is viewed from the front of the printer.

NOTE: Inverse Landscape orientation applies to PGL and VGL emulations. This is regarded as Landscape using PPI/ZGL.

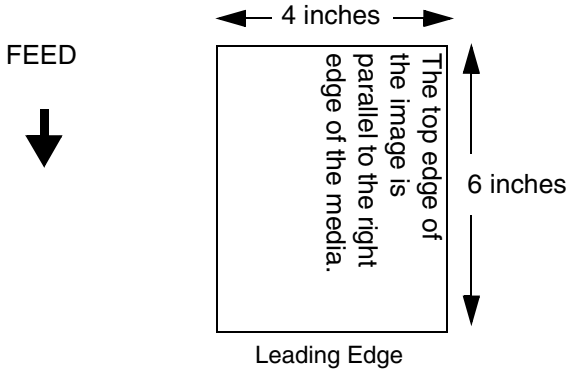

Gap/Mark Sensor

Specifies the sensor type needed for detecting the top-of-form position on media with label length indicators (gaps, notches, holes, or black marks).

- **Disable**. Select when using media with no label length indicators (no gaps, notches, holes, or black marks), or when you want the printer to ignore all existing label length indicators on the installed media.

NOTE: When you select Disable, the length of each label is based on the Label Length value entered.

- **Mark**. Select when using media that has horizontal black marks located on the underside of the label liner or tag stock. The top-of-form position is the leading edge of the black mark.
- **Gap**. Select when using media with a liner space between die cut labels or when using tag stock with notches or holes as label length indicators on white background media. The top-of-form position is the leading edge of the die cut label (trailing edge of the gap, notch, or hole).
- **Advanced Gap**. Select when using media that has liner gaps between die cut labels with black background. The top-of-form position is the leading edge of the die cut label (trailing edge of the gap, notch, or hole).
- **Advanced Notch**. Select when using media with notches or holes that interrupt a black vertical line on the underside of the media. The top-of-form position is the leading edge of the die cut label (trailing edge of the gap, notch, or hole).

The default is Disable.

Gap Sensing for Smart Labels

If your smart labels have a horizontal black bar located within each liner gap, set Gap/Mark Sensor to Gap. When you examine a Media Profile printout (page 32), you will see that the black bar provides a much higher amplitude pulse than that of any antenna, which will provide excellent top-of-form reliability.

If your smart labels have no horizontal black bar located within each liner gap, you must choose between Gap and Advanced Gap sensing. Run an Auto Calibrate (page 30), then make a Media Profile printout (page 32). Choose the sensing type that provides the highest liner gap amplitude compared to the amplitude of the antenna line. If you select Gap sensing, and then see that the Media Profile printout shows very little amplitude difference for the liner gap compared to the amplitude of the antenna line, select Advanced Gap sensing instead.

Advanced Gap sensing (often called transmissive) uses an LED array for the upper sensor and a receiver in the lower sensor to detect infrared light through the liner gap. This sensing has the advantage of detecting the liner gap as a positive amplitude pulse and the antenna line as a smaller, negative pulse.

Auto Calibrate

This feature is used to improve the sensitivity and reliability of the media sensor in detecting gaps, notches, holes, or black marks on the installed media, as well as a Paper Out condition.

NOTE: You must set the correct Label Length to force Auto Calibrate to increase media advancement for long labels (to detect actual gaps, notches, or marks) and decrease media advancement for short labels.

To initiate Auto Calibrate, scroll to the Auto Calibrate menu and press the ↵ key. The printer will advance media the distance needed to accurately detect the label length indicators, then stop at the top-of-form position and momentarily display the Sensed Distance. This process takes a few seconds and results in an update of the printer values.

Auto Calibrate is completed successfully when the Sensed Distance displayed correctly matches that of the installed media. With Gap or Advanced Gap selected, the Sensed Distance should match the length from the trailing edge of one gap to the trailing edge of the next gap (one label + one gap). With Mark selected, the Sensed Distance should match the length from the leading edge of one black mark to the leading edge of the next black mark.

Auto Calibrate supports label lengths up to 24 inches.

Validator Funct.

This menu appears only if the validator option is installed.

- **Enabled**. The printer commands the validator to begin scanning bar codes and to report errors. The counters increment while the validator is enabled.
- **Disabled**.The printer will not command the validator to begin scanning bar codes and no errors will be reported. The counters will not increment while the validator is disabled.

NOTE: If you save a configuration with the validator enabled, power down and power up, and the validator is not connected or not functioning, the error message “Validator not communicating” displays briefly. The Validator menu will not display.

If the validator is installed, the default is Enable.

Active IGP Emul

This function allows you to activate any resident IGP emulation listed in the menu. The number of IGP emulations available is based on the Security Key installed. The default is IGP/PGL.

There are two methods for selecting the desired emulation: directly from the printer menu or by sending a host command which will switch the emulation automatically (see the appropriate *Programmer’s Reference Manual* for details).

Save Config.

Allows you to save up to eight unique configurations to meet different print job requirements. This eliminates the need to change the parameter settings for each new job. The configurations are stored in memory and will not be lost if you turn off the printer.

The default is 1.

Power-Up Config.

You can specify the Factory configuration or any one of the eight possible saved configurations as the power-up configuration.

The default is Factory.

SMT: Status

This menu appears only if an RFID encoder is installed. Refer to “Software Migration Tools (SMT)” in the *RFID Labeling Reference Manual*.

- **Disabled**.The printer disables the use of the Software Migration Tools.
- **Enabled**. The printer enables the use of the Software Migration Tools.

SMT: Sel Toolset

This menu appears only if an RFID encoder is installed. Refer to “Software Migration Tools (SMT)” in the *RFID Labeling Reference Manual*.

- **Toolset [1]**. SMTs for PGL emulation.
- **Toolset [2]**. SMTs for PPI/ZGL emulation.
- **Toolset [3]** and **Toolset [4]**. Reserved for internal use and future design.

SMT: Select Tool

This menu appears only if an RFID encoder is installed. Refer to “Software Migration Tools (SMT)” in the *RFID Labeling Reference Manual*.

- **EPC**, **GTIN**, **UPCA**, **EAN8**, **EAN13**, and **UCC128**. SMTs displayed if Toolset [1] is selected under SMT: Sel Toolset.
- **zEPC**, **zGTIN**, **zUPCA**, **zEAN8**, **zEAN13**, and **zUCC128**. SMTs displayed if Toolset [2] is selected under SMT: Sel Toolset.

NOTE: Undocumented options are reserved for internal use and future design.

Saving The Configuration

After customizing your settings, save them as a configuration:

1. Press the ⋮☰ key to enter the QUICK SETUP menu.
2. Press ↑ or ↓ until Save Config. / 1* displays.
3. If necessary, press **+** or **–** until the desired configuration displays.
4. Press ↵. Saving Configuration displays briefly.

NOTE: You can specify a 15-character name for your configuration. See “Name Config (1-8)” in the *User’s Manual*.

5. If necessary, set your newly saved configuration as the Power-Up configuration. See “Selecting The Power-Up Configuration” below.

Selecting The Power-Up Configuration

To have a saved configuration automatically loaded when you power up the printer, set the saved configuration as the Power-Up configuration:

1. Press the ⋮☰ key to enter the QUICK SETUP menu.
2. Press ↑ or ↓ until Power-Up Config. / Factory* displays.
3. Press **+** or **–** until the desired configuration displays.
4. Press ↵. An asterisk (*) displays next to the selected configuration.

Loading A Saved Configuration

To use a different configuration, load a saved configuration:

1. Press the **PAUSE** key until OFFLINE displays.
2. Press the **JOB SELECT** key until the desired configuration displays.
3. Press ↵. Loading Saved / Configuration displays.

Run A Barcode Demo Test

IMPORTANT **Printronix recommends using the supplied starter roll of 100 labels to set up and verify printer operation. If you have an SL5000r, this will avoid expending the more expensive smart labels for this task.**

Before you send an actual print job, run a barcode demo test:

1. Press the **PAUSE** key until OFFLINE displays.
2. Press **TEST PRINT** until Printer Tests / Barcode Demo displays.
3. Press ↵. The Barcode Demo test pattern will start and print two barcodes.
4. Check the test pattern. If necessary, reposition the pressure blocks to obtain a uniform print quality. In most cases, you will need to adjust only the right pressure block.
5. If desired, you can run additional printer tests, such as Grey, Grid, and Checkerboard. See step 1 above to start other tests.

NOTE: These tests run continuously by default. Press ↵ to end the test.

Cleaning

Depending on the media used, the printer may accumulate residues (media dust, adhesives, etc.) as a by-product of normal printing. To maintain top printing quality, you should remove these residues by cleaning the printer periodically.

Exterior

Clean the exterior surfaces with a clean, lint-free cloth. If necessary, use a mild detergent or desktop cleaning solution.

NOTE: Do not use abrasive cleaning agents or solvents.

Interior

Clean the interior of the printer by removing any dirt and lint with a soft-bristled, non-metallic brush. Use a vacuum cleaner to remove the residue.

General Cleaning

Periodically clean all rollers, guides, and assemblies. Use low pressure air to remove dust in the printer. Use isopropyl alcohol and a cotton swab to clean any areas where media dust, adhesives, etc. have accumulated.

Cleaning The Printhead, Platen Roller, And Media Sensors

NOTE: You do not need to turn off the printer before cleaning the printhead, platen roller, or media sensors.

Printhead Cleaning

As you use your printer, the printhead may become dirty which can result in poor print quality. Clean the printhead each time you install new ribbon (thermal transfer print mode) or install new media

(direct thermal print mode). Clean the printhead with the cleaning pen supplied with the printer.

By keeping your printhead clean, you will help maintain its life.

Platen Roller Cleaning

Media dust and adhesive residue on the platen roller can degrade print quality and cause voids in your label image. Clean the platen roller at the same time as the printhead.

Use a small amount of isopropyl alcohol on a cloth to clean the platen roller. With the pivoting deck up the platen roller can be rotated forward by hand to access and clean its entire surface area.

Media Sensor Cleaning

The upper and lower media sensors should be cleaned to ensure reliable TOF and Paper Out sensing. Clean the media sensors at the same time as the printhead.

The upper media sensor (located in the horizontal slot of the printhead cover) can be wiped clean using a soft cloth. The lower media sensor, easily seen by its visible red light, is located in the horizontal slot of the media guard. Remove media dust by vacuuming or blowing air across the lens cover.

Media Damper Cleaning

The media damper and media width guide (see figure on page 20) can begin to collect adhesive and paper dust residue that can prevent proper guiding of labels.

Use a small amount of isopropyl alcohol on a cloth to remove label adhesive and dust from the underside of the media damper and its fixed (inbound) guide and from the adjustable (outbound) width guide.

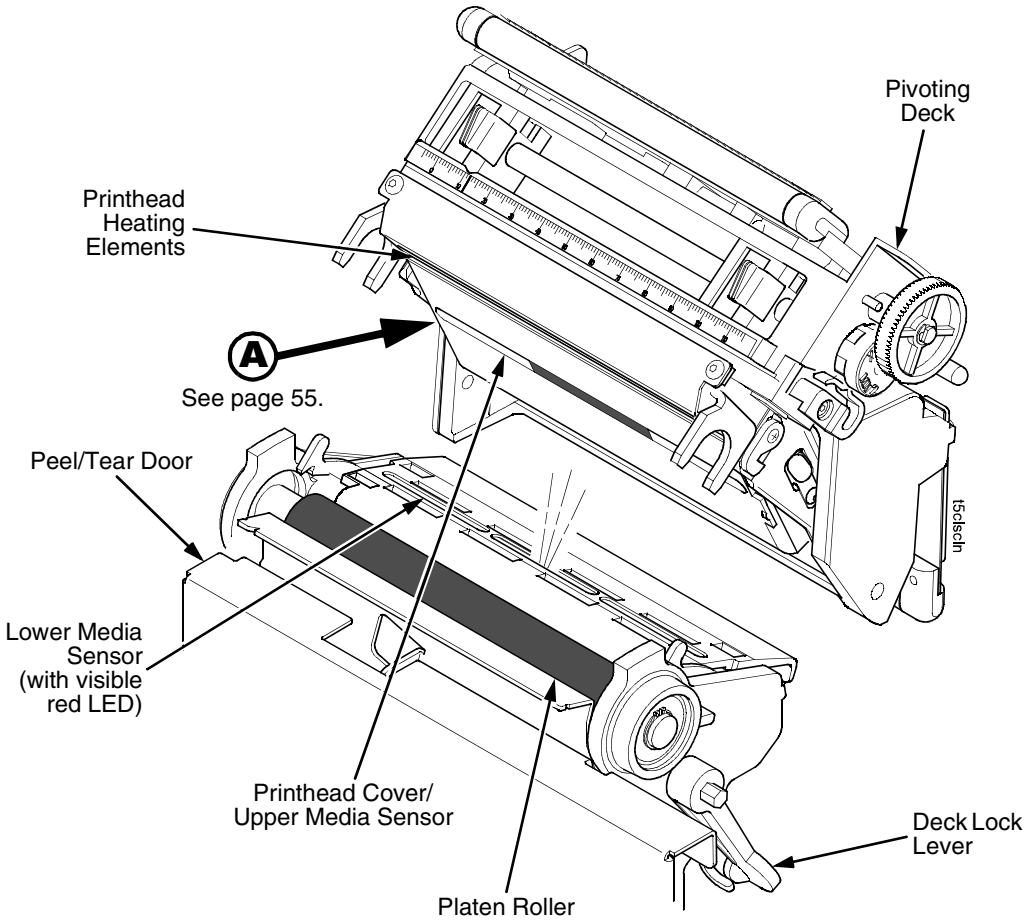
Pivoting Deck
Printhead Heating Elements
A
See page 55.
Peel/Tear Door
Lower Media Sensor (with visible red LED)
Printhead Cover/ Upper Media Sensor
Platen Roller
Deck Lock Lever
t5clscln

A
From page 54.

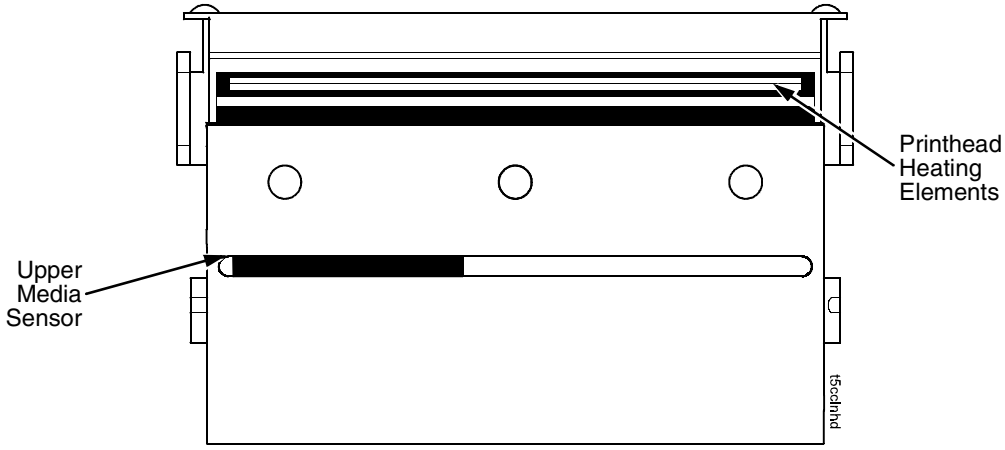

1. Rotate the deck lock lever clockwise to open the pivoting deck and remove any media and ribbon (if loaded) to gain access to the printhead assembly heating element area.
2. Gently rub the felt tip of the cleaning pen or a cotton swab with isopropyl alcohol across the printhead heating elements (light brown area).
3. Allow the printhead to dry for one minute before reloading the media and ribbon.
4. Clean the platen roller.
5. Clean the upper and lower media sensors.

Repacking The Printer

CAUTION **Follow all of the repacking instructions carefully, otherwise the printer could be damaged during shipping.**

1. Remove all media and ribbon.
2. Install the foam pads and tape the media cover to the base pan as shown on page 12.
3. Rotate the printhead pressure adjustment dial fully counterclockwise to the MIN setting.
4. Close the pivoting deck until the latches catch.

CAUTION **Do not rotate the deck lock lever counterclockwise.**

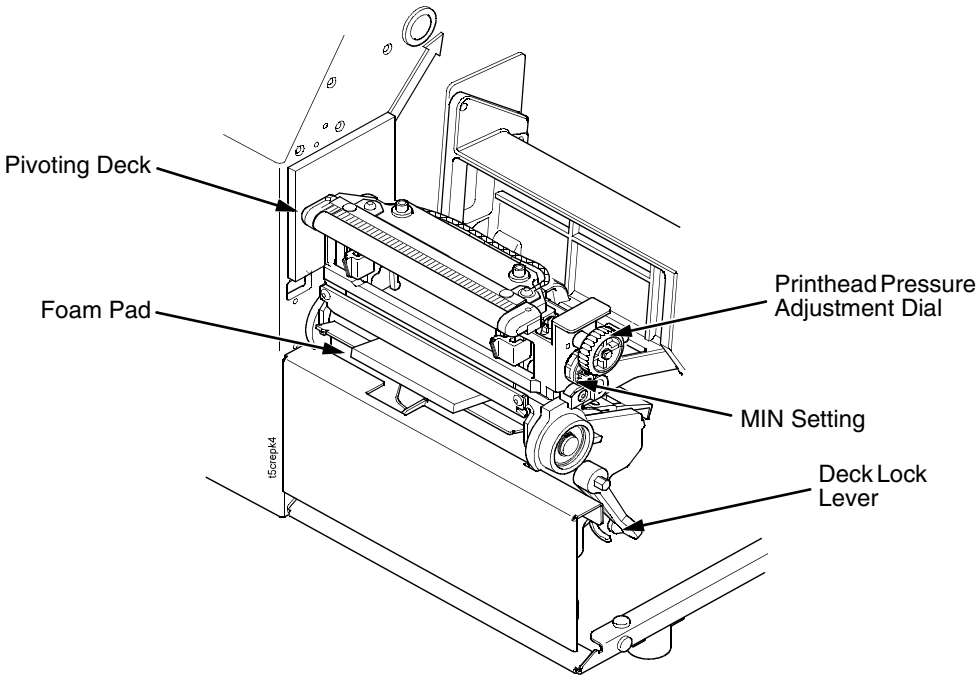

5. Pack the printer (taped in its bag) as shown (a).

CAUTION **Pack the printer with the media cover (window side) up.**

6. Pack the remaining items as shown (b), and tape the box flaps closed.
7. Strap the box securely (straps not supplied) before shipping (c).

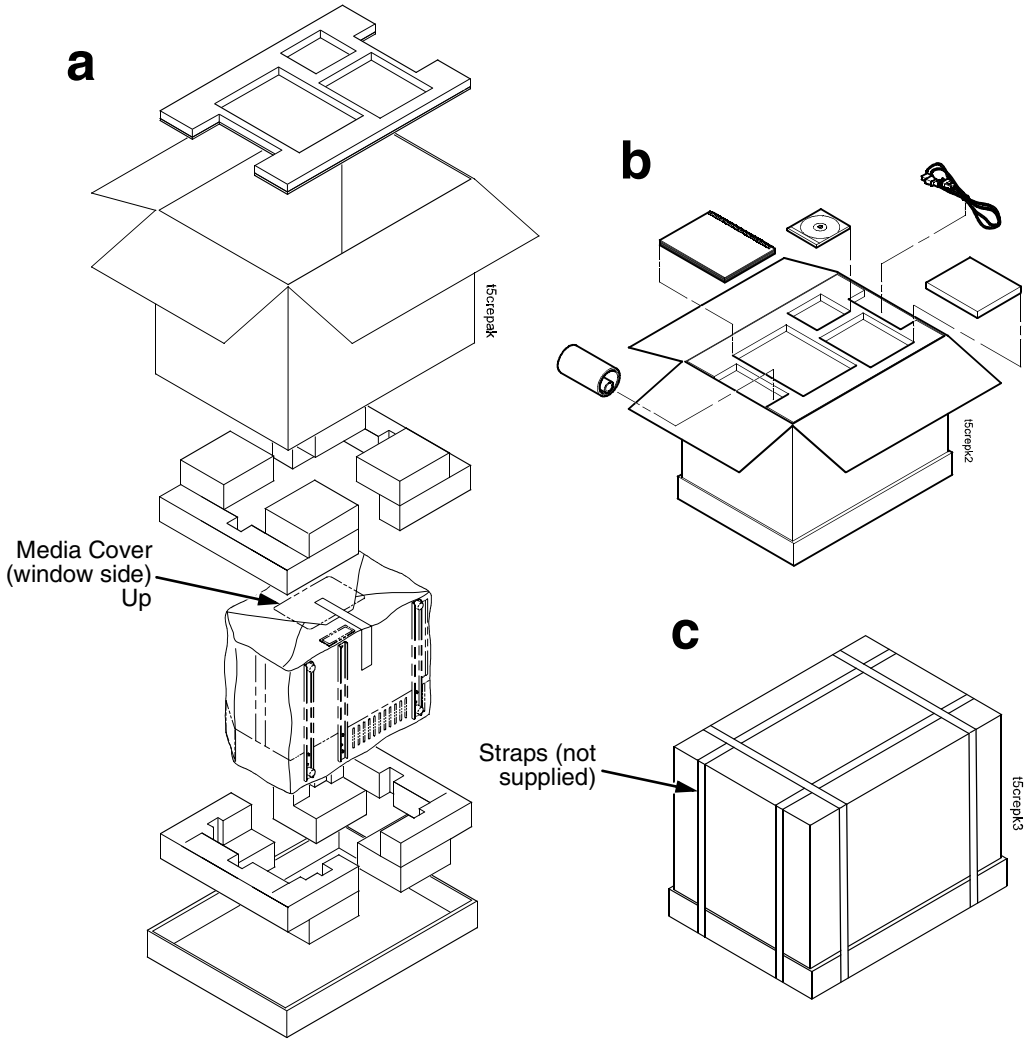

For More Information

This *Quick Setup Guide* has provided general information for use of your printer. Refer to the *User's Manual* for more detailed information including:

- Other Configuration Menus
- Interfaces
- Diagnostics and Troubleshooting
- Printer Options
- Specifications
- Glossary of Terms

For technical assistance, contact your Distributor/VAR/Reseller for service.

For further assistance, contact the Printronix Customer Support Center.

Printronix Customer Support Center

Americas	(714) 368-2686
Europe, Middle East, and Africa	(31) 24 6489 410
Asia Pacific	(65) 6548 4114

Web site: http://www.printronix.com/public/servicessupport/default.aspx

Printronix Supplier Center

Americas	(800) 733-1900
Europe, Middle East, and Africa	(33) 1 46 25 1900
Asia Pacific	(65) 6548 4116 or (65) 6548 4182

Web site: http://www.printronix.com/public/supplies/default.aspx

Printronix, Inc.
14600 Myford Road
P.O. Box 19559
Irvine, CA 92623-9559
Phone: (714) 368-2300
Fax: (714) 368-2600

Printronix Schweiz Gmbh
42 Changi South Street 1
Changi South Industrial
Estate Singapore 486763
Phone: (65) 6542 0110
Fax: (65) 6543 0220

Printronix, Inc.
Nederland BV
P.O. Box 163 Nieuweweg 283
NI-6600 Ad Wijchen
The Netherlands
Phone: (31) 24 6489 489
Fax: (31) 24 6489 499

Or visit the Printronix web site at www.printronix.com

178423-001B