Installation & Operation Guide

Microwave Data Systems Inc.

MDS 1710 A/C/F
MDS 2710A/C/D

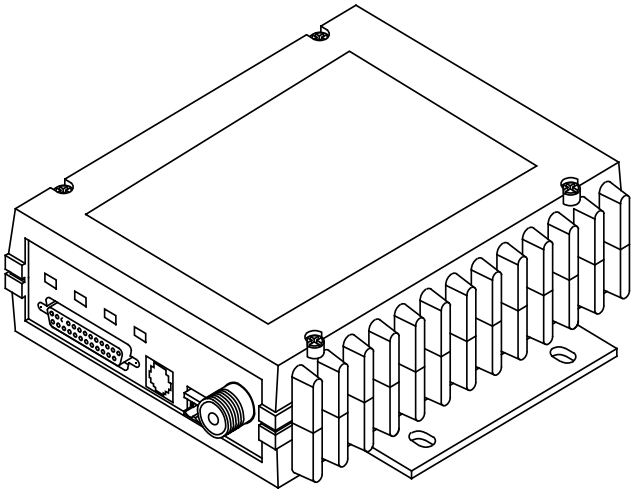

Data Transceiver

MDS 05-3447A01, REV. E
FEBRUARY 2003

industrial/wireless/performance

QUICK START GUIDE

Below are the basic steps for installing the transceiver. Detailed instructions are provided in “Installation Steps” on Page 9 of this manual.

1. Install and connect the antenna system to the radio

- Use good quality, low loss coaxial cable. Keep the feedline as short as possible.
- Preset directional antennas in the direction of desired transmission.

2. Connect the data equipment to the radio’s INTERFACE connector

- Connection to the radio must be made with a DB-25 Male connector. Connections for typical systems are shown below.
- Connect only the required pins. Do not use a straight-through RS-232 cable with all pins wired.
- Verify the data equipment is configured as DTE. (By default, the radio is configured as DCE.)

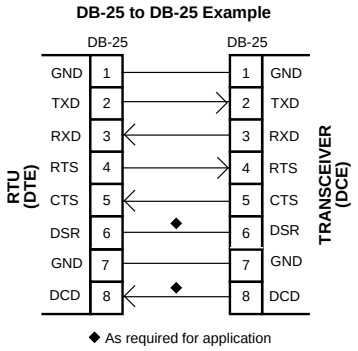

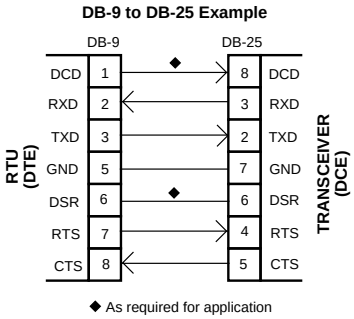

3. Apply DC power to the radio (10.5–16 Vdc @ 2.5 A minimum)

- Observe proper polarity. The red wire is the positive lead; the black is negative.

4. Set the radio’s basic configuration with a Hand-Held Terminal (HHT)

- Set the transmit frequency (**TX xxx.xxxxx**).
- Set the receive frequency (**RX xxx.xxxxx**).
- Set/verify the data rate using the **BAUD** command. The default setting is **BAUD 4800 8N1**. (Refer to “TRANSCEIVER PROGRAMMING” on Page 17 for command details.)

5. Verify proper operation by observing the LED display

- Refer to Table 5 on page 16 for a description of the status LEDs.
- Refine directional antenna headings for maximum receive signal strength using the **RSSI** command.

TABLE OF CONTENTS

1.0 GENERAL 1
1.1 Introduction 1
1.2 Differences Between Models 2
1.3 Applications 2
Point-to-Multipoint, Multiple Address Systems (MAS) 2
Point-to-Point System 3
Continuously Keyed versus Switched Carrier Operation 4
Single Frequency (Simplex) Operation 4
1.4 Product Configurator Codes 4
1.5 Accessories 5
2.0 GLOSSARY OF TERMS 5
3.0 INSTALLATION 8
3.1 Installation Steps 9
3.2 Transceiver Mounting 11
3.3 Antennas and Feedlines 11
Feedlines 12
3.4 Power Connection 12
3.5 Data Interface Connections 13
3.6 Using the Radio's Sleep Mode 13
Sleep Mode Example 13
4.0 OPERATION 15
4.1 LED Indicators 16
4.2 RSSI Measurement 16
5.0 TRANSCEIVER PROGRAMMING 17
5.1 Hand-Held Terminal Connection & Startup 17
5.2 Hand-Held Terminal Setup 18
5.3 Keyboard Commands 19
Entering Commands 19
Error Messages 19
5.4 Detailed Command Descriptions 22
AMASK [0000 0000–FFFF FFFF] 22
ASENSE [HI/LO] 23
BAUD [xxxxx abc] 23
BUFF [ON, OFF] 23
CKEY [ON–OFF] 24
CTS [0–255] 24
DATAKEY [ON, OFF] 24
DEVICE [DCE, CTS KEY] 24
DKEY 25

DLINK [ON/OFF/xxxx] 25
DMGAP [xx] 25
DTYPE [NODE/ROOT] 25
DUMP 26
HREV 26
INIT 26
INIT [2710] 26
INIT [2720] 26
KEY 27
MODEL 27
MODEM [xxxx, NONE] 27
OWM [XXX...] 27
OWN [XXX...] 27
PTT [0–255] 27
PWR [20–37] 27
RSSI 28
RTU [ON/OFF/0-80] 28
RX [xxx.xxxxx] 28
RXTOT [NONE, 1-255] 28
SCD [0-255] 28
SER 28
SHOW [DC, PORT, PWR] 29
SNR 29
SREV 29
STAT 29
TEMP 29
TOT [1-255, ON, OFF] 30
TX [xxx.xxxxx] 30
UNIT [10000...65000] 30

6.0 TROUBLESHOOTING 30

6.1 LED Indicators 31
6.2 Event Codes 31
Checking for Alarms—STAT command 31
Major Alarms vs. Minor Alarms 31
Event Code Definitions 32

7.0 TECHNICAL REFERENCE 33

7.1 MDS 2710A/C/D Transceiver Specifications 33
7.2 Performing Network-Wide Remote Diagnostics 34
7.3 Bench Testing Setup 36
7.4 Helical Filter Adjustment 37
7.5 Upgrading the Radio's Software 38
Using Radio Software Upgrade Diskette 38
Using Radio Configuration Software 39
7.6 dBm-Watts-Volts Conversion Chart 40

Copyright Notice

This Installation and Operation Guide and all software described herein are protected by **copyright: © 2003 Microwave Data Systems Inc**. All rights reserved.

Microwave Data Systems reserves its right to correct any errors and omissions.

Operational Safety Notices

RF Exposure

The radio equipment described in this guide emits radio frequency energy. Although the power level is low, the concentrated energy from a directional antenna may pose a health hazard. Do not allow people to come closer than 1.40 meters to the front of the antenna when the transmitter is operating with a 7 dBd (9.15 dBi) gain antenna. Use of higher gain antennas means increasing the distance accordingly.

This manual is intended to guide a *professional installer* to install, operate and perform basic system maintenance on the described radio.

ISO 9001 Registration

Microwave Data Systems' adheres to this internationally accepted quality system standard.

To our Customers

We appreciate your patronage. You are our business. We promise to serve and anticipate your needs. We will strive to give you solutions that are cost effective, innovative, reliable and of the highest quality possible. We promise to build a relationship that is forthright and ethical, one that builds confidence and trust.

Notice

While every reasonable effort has been made to ensure the accuracy of this manual, product improvements may result in minor differences between the manual and the product shipped to you. If you have additional questions or need an exact specification for a product, please contact our Customer Service Team using the information at the back of this guide. In addition, manual updates can often be found on the MDS Web site at **www.microwavedata.com**.

FCC Approval Notice

As of the printing date, VHF models are approved for operation in the USA from 150 to 174 MHz. Contact MDS for current approval status.

1.0 GENERAL

1.1 Introduction

This guide presents installation and operating instructions for MDS 1710A/C/F and MDS 2710 A/C/D series digital radio transceivers.

These transceivers (Figure 1) are data telemetry radios designed to operate in a point-to-multipoint environment, such as electric utility Supervisory Control and Data Acquisition (SCADA) and distribution automation, gas field automation, water and wastewater SCADA, and on-line transaction processing applications. They use microprocessor control and Digital Signal Processing (DSP) technology to provide highly reliable communications even under adverse conditions.

MDS 1710/2710 Series radios use continuous-phase frequency shift keying (CPFSK) modulation with root duo-binary filtering (the sum of two Nyquist-shaped, root-raised cosine responses). Demodulation uses a Virterbi decoder and equalization with soft decision decoding.

Modulation and demodulation is accomplished using Digital Signal Processing (DSP). DSP adapts to differences between components from unit to unit, and ensures consistent and repeatable performance in ambient temperatures from –30 to +60 degrees Celsius. The use of Digital Signal Processing eliminates the fluctuations and variations in modem operation that can degrade the operation of analog circuits.

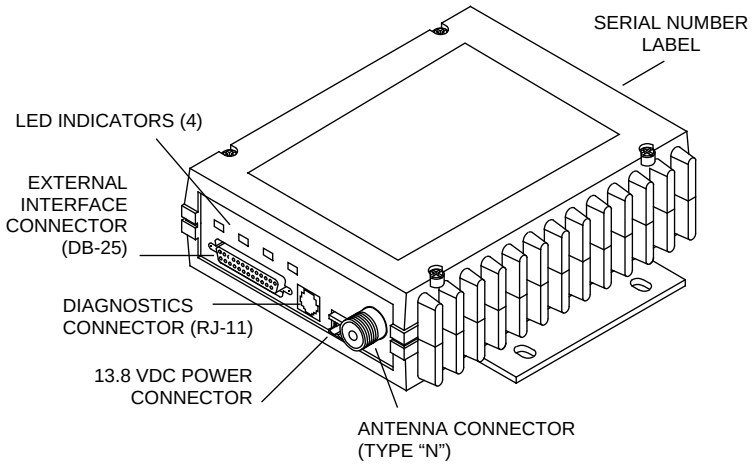

Figure 1. Transceiver Connectors and Indicators

The transceiver is designed for trouble-free operation with data equipment provided by many other manufacturers, including Remote Terminal Units (RTUs), programmable logic controllers (PLCs), flow computers, lottery terminals, automatic teller machines, and others.

NOTE: Some features may not be available, based on the options purchased and the applicable regulations for the region in which the radio will operate.

1.2 Differences Between Models

All models of the MDS 1710/2710 Series are very similar in appearance and functionality. The major differences are in frequency coverage, channel bandwidth and data speed. Table 1 summarizes the available models and identifies the characteristics of each.

To determine the specific settings for your radio (as originally shipped from the factory), please refer to the Product Configurator chart shown in Figure 4.

Table 1. MDS 1710/2710 Series Characteristics

Radio Model No.	Operating Frequency	Channel Bandwidth	Over-the-Air Data Speed
MDS 1710A	130–174 MHz	12.5 kHz	9600 bps
MDS 2710A	220–240 MHz	12.5 kHz	9600 bps
MDS 1710C	130–174 MHz	25 kHz	19200 bps
MDS 2710C	220-240 MHz	25 kHz	19200 bps
MDS 1710F	130–174 MHz	6.25 kHz	4800 bps
MDS 2710D	220–240 MHz	5 kHz	3200 bps
Consult factory for current regulatory approvals on these products.			

NOTE: The operating software for A, C, D and F models is *not* interchangeable.

NOTE: The narrow bandwidth of the MDS 2710D and MDS 1710F transceiver is not compatible with standard analog modems, including the widely used Bell 202T. The MDS 2710D is intended for digital RS-232 data only.

1.3 Applications

Point-to-Multipoint, Multiple Address Systems (MAS)

This is the most common application of the transceiver. It consists of a central master station and several associated remote units as shown in Figure 2. An MAS network provides communications between a central host computer and remote terminal units (RTUs) or other data collection devices. The operation of the radio system is transparent to the computer equipment.

Often, a radio system consists of many widely separated remote radios. A point-to-multipoint or SCADA (Supervisory Control and Data Acquisition) system may be a new installation for automatic, remote monitoring of gas wells, water tank levels, electric power distribution system control and measurement, etc.

The radio system may replace a network of remote monitors currently linked to a central location via leased telephone line. At the central office of such a system, there is usually a large mainframe computer and some means of switching between individual lines coming from each remote monitor. In this type of system, there is a modulator/demodulator (modem) at the main computer, and at each remote site, usually built into the remote monitor itself. Since the cost of leasing a dedicated-pair phone line is quite high, radio is often used as an alternative communication medium.

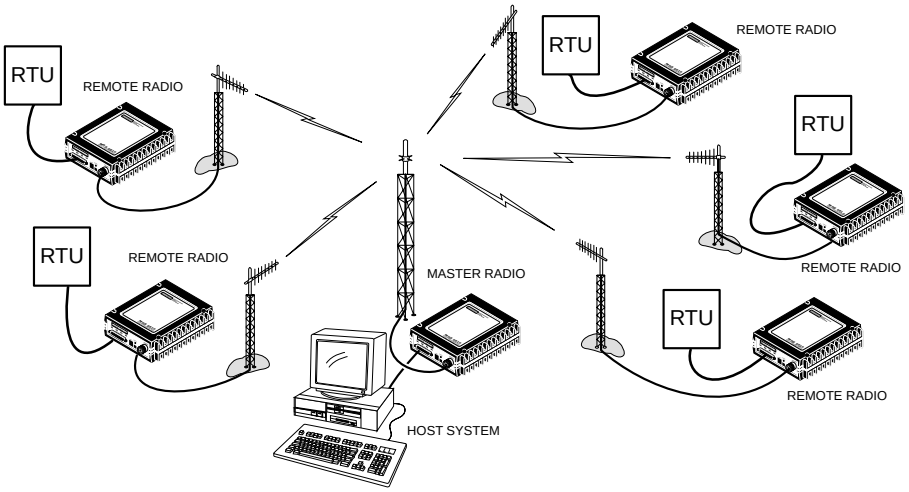

Figure 2. Typical MAS Point-to-Multipoint Network

Point-to-Point System

Where permitted, the transceiver may also be used in a point-to-point arrangement. A point-to-point system consists of just two radios—one serving as a master and the other as a remote—as shown in Figure 3. It provides a simplex or half-duplex communications link for the transfer of data between two locations.

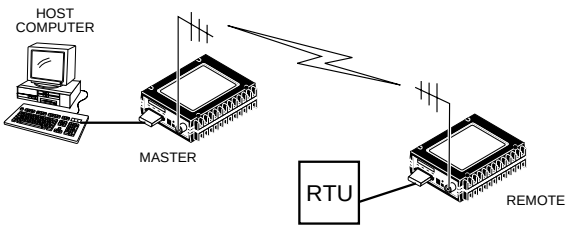

Figure 3. Typical Point-to-Point Link

Continuously Keyed versus Switched Carrier Operation

The keying behavior of the master station can be used to describe an MAS system.

Continuously Keyed operation means the master station transmitter is always transmitting a carrier, even when there is no data to send. The master station is always simultaneously transmitting and continuously listening. Different frequencies must be used for transmit and receive.

NOTE: MDS 1710/2710 radios do not support full-duplex operation. Therefore, switched carrier mode must be set to ON (**SWC ON**).

Switched Carrier operation is a half-duplex mode of operation where the master station transmitter is keyed to send data and unkeyed to receive.

Single Frequency (Simplex) Operation

Single frequency operation (also known as simplex) is a special case of switched carrier operation. Single frequency operation is automatically selected whenever the transmit and receive frequencies are set to the same value. Note that data turn-around times are increased when a single frequency configuration is used.

1.4 Product Configurator Codes

The full radio model number is printed on the radio enclosure. It provides key information about how the radio was configured when it was originally shipped from the factory. See Figure 4 for an explanation of the configurator codes.

THIS INFORMATION IS SUBJECT TO CHANGE.

DO NOT USE FOR PRODUCT ORDERING.

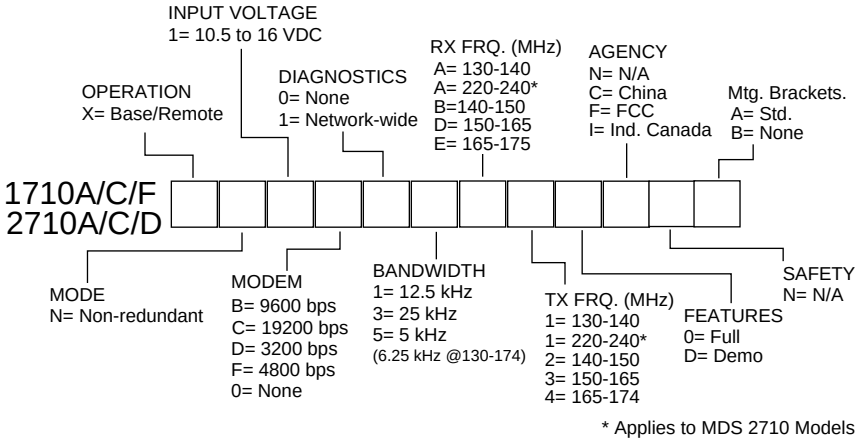

Figure 4. MDS 1710x/2710x Product Configurator Codes

1.5 Accessories

The transceiver can be used with one or more of the accessories listed in Table 2. Contact Microwave Data Systems for ordering information.

Table 2. MDS 1710/2710 Series Optional Accessories

Accessory	Description	MDS P/N
Hand-Held Terminal Kit (HHT)	Terminal that plugs into the radio for programming, diagnostics & control. Includes carrying case, instructions and cable set.	02-1501A01
RTU Simulator	Test module that simulates data from a remote terminal unit. Comes with MDS polling software (02-2093Axx) that runs on a PC. Useful for testing radio operation.	03-2512A01
Order Wire Module	External device that allows temporary voice communication. Useful during setup & testing of the radio system.	02-1297A01
Power Supply Kit	AC adaptor that converts 110/220 Vac to 12 Vdc at 30 watts.	01-3682A01
Order Wire Handset	Used with Order Wire Module (above).	12-1307A01
RJ-11 to DB-9 Adapter	Used to connect a PC to the radio's DIAG. port	03-3246A01
EIA-232 to EIA-422 Converter Assembly	External adapter plug that converts the radio's DATA INTERFACE connector to EIA-422 compatible signaling.	03-2358A01
TTL Converter Assembly	External adapter plug that converts the radio's DATA INTERFACE connector to TTL compatible signaling.	03-2223A01
Radio Configuration Software	Provides diagnostics of the transceiver (Windows-based PC required.)	03-3156A01
VOX Assembly	External unit used to key the radio when audio input is present.	03-1098A02
19-inch Rack Mounting Kit	Allows mounting the transceiver in a standard 19 inch rack cabinet. (Power supply and Interface Board not included.)	02-1983A02
Brown-Out Protection Board	PCB that protects against low voltage conditions.	03-2567A01

2.0 GLOSSARY OF TERMS

If you are new to digital radio systems, some of the terms used in this guide may be unfamiliar. The following glossary explains many of these terms and will prove helpful in understanding the operation of the transceiver.

Active Messaging—This is a mode of diagnostic gathering that may interrupt SCADA system polling communications (contrast with *passive messaging*). Active (or intrusive) messaging is much faster than passive messaging because it is not dependent upon the RTU polling cycle.

Antenna System Gain—A figure, normally expressed in dB, representing the power increase resulting from the use of a gain-type antenna. System losses (from the feedline and coaxial connectors, for example) are subtracted from this figure to calculate the total antenna system gain.

Bit—The smallest unit of digital data, often represented by a one or a zero. Eight bits (plus start, stop, and parity bits) usually comprise a byte.

Bits-per-second—See *BPS*.

BPS—Bits-per-second. A measure of the information transfer rate of digital data across a communication channel.

Byte—A string of digital data usually made up of eight data bits and start, stop and parity bits.

Decibel (dB)—A measure computed from the ratio between two signal levels. Frequently used to express the gain (or loss) of a system.

Data Circuit-terminating Equipment—See *DCE*.

Data Communications Equipment—See *DCE*.

Data Terminal Equipment—See *DTE*.

dBi—Decibels referenced to an “ideal” isotropic radiator in free space. Frequently used to express antenna gain.

dBm—Decibels referenced to one milliwatt. An absolute unit used to measure signal power, as in transmitter power output, or received signal strength.

DCE—Data Circuit-terminating Equipment (or Data Communications Equipment). In data communications terminology, this is the “modem” side of a computer-to-modem connection. The transceiver described in this guide is a DCE device.

Digital Signal Processing—See *DSP*.

DSP—Digital Signal Processing. In the transceiver, the DSP circuitry is responsible for the most critical real-time tasks; primarily modulation, demodulation, and servicing of the data port.

DTE—Data Terminal Equipment. A device that provides data in the form of digital signals at its output. Connects to the DCE device.

Equalization—The process of reducing the effects of amplitude, frequency or phase distortion with compensating networks.

Fade Margin—The greatest tolerable reduction in average received signal strength that will be anticipated under most conditions. Provides an allowance for reduced signal strength due to multipath, slight antenna movement or changing atmospheric losses. A fade margin of 20 to 30 dB is usually sufficient in most systems.

Frame—A segment of data that adheres to a specific data protocol and contains definite start and end points. It provides a method of synchronizing transmissions.

Hardware Flow Control—A transceiver feature used to prevent data buffer overruns when handling high-speed data from the RTU or PLC. When the buffer approaches overflow, the radio drops the clear-to-send (CTS) line, which instructs the RTU or PLC to delay further transmission until CTS again returns to the high state.

Host Computer—The computer installed at the master station site, which controls the collection of data from one or more remote sites.

Intrusive Diagnostics—A mode of remote diagnostics that queries and commands radios in a network with an impact on the delivery of the system "payload" data. See *Active messaging*.

Latency—The delay (usually expressed in milliseconds) between when data is applied to TXD (Pin 2) at one radio, until it appears at RXD (Pin 3) at the other radio.

MAS—Multiple Address System. A radio system where a central master station communicates with several remote stations for the purpose of gathering telemetry data.

Master (Station)—Radio which is connected to the host computer. It is the point at which polling enters the network.

MCU—Microcontroller Unit. This is the processor responsible for controlling system start-up, synthesizer loading, and key-up control.

Microcontroller Unit—See *MCU*.

Multiple Address System—See *MAS*.

Network-Wide Diagnostics—An advanced method of controlling and interrogating MDS radios in a radio network.

Non-intrusive diagnostics—See *Passive messaging*.

Passive messaging—This is a mode of diagnostic gathering that does not interrupt SCADA system polling communications. Diagnostic data is collected non-intrusively over a period of time; polling messages are carried with SCADA system data (contrast with *active messaging*).

Payload data—This is the application's user communication data which is sent over the radio network. It is the transfer of payload data that is the primary purpose of the radio communications network.

Point-Multipoint System—A radio communications network or system designed with a central control station that exchanges data with a number of remote locations equipped with terminal equipment.

Poll—A request for data issued from the host computer (or master PLC) to a remote radio.

PLC—Programmable Logic Controller. A dedicated microprocessor configured for a specific application with discrete inputs and outputs. It can serve as a host or as an RTU.

Programmable Logic Controller—See *PLC*.

Remote (Station)—A radio in a network that communicates with an associated master station.

Remote Terminal Unit—See *RTU*.

Redundant Operation—A station arrangement where *two* transceivers and two power supplies are available for operation, with automatic switchover in case of a failure.

RTU—Remote Terminal Unit. A data collection device installed at a remote radio site. An internal RTU *simulator* is provided with the transceiver to isolate faults to either the external RTU or the radio.

SCADA—Supervisory Control And Data Acquisition. An overall term for the functions commonly provided through an MAS radio system.

Standing Wave Ratio—See *SWR*.

Supervisory Control And Data Acquisition—See *SCADA*.

SWR—Standing Wave Ratio. A parameter related to the ratio between forward transmitter power and the reflected power from the antenna system. As a general rule, reflected power should not exceed 10% of the forward power (≈ 2:1 SWR).

3.0 INSTALLATION

There are three main requirements for installing the transceiver—adequate and stable primary power, a good antenna system, and the correct data connections between the transceiver and the data device. Figure 5 shows a typical remote station arrangement.

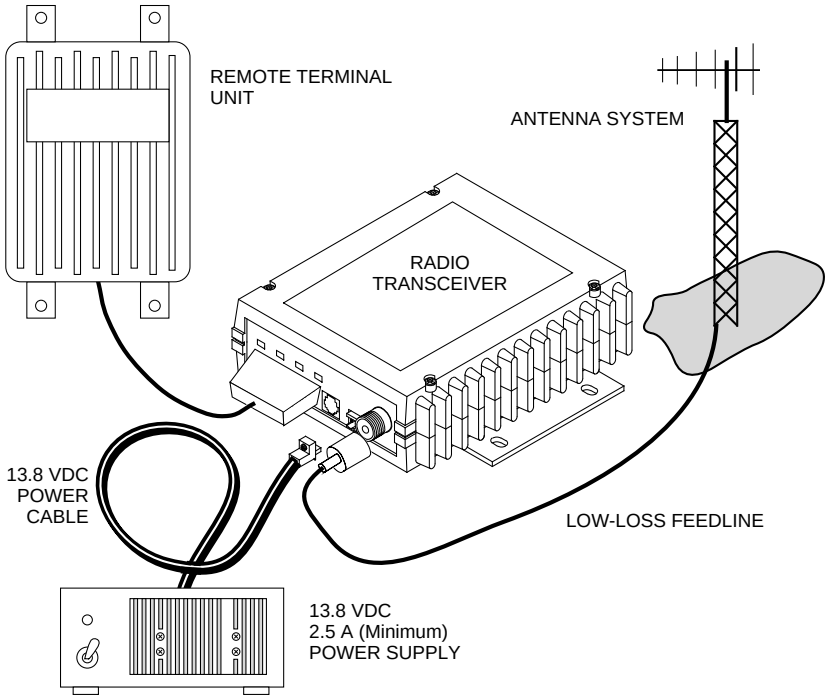

Figure 5. Typical Remote Station Arrangement

3.1 Installation Steps

Below are the basic steps for installing the transceiver. In most cases, these steps alone are sufficient to complete the installation. More detailed explanations appear at the end of these steps.

1. Mount the transceiver to a stable surface using the brackets supplied with the radio.

2. Install the antenna and antenna feedline for the station. Preset directional antennas in the desired direction.

3. Connect the data equipment to the transceiver's DATA INTERFACE connector. Use only the required pins for the application—Do *not* use a fully pinned (25 conductor) cable. Basic applications may require only the use of Pin 2 (transmit data—TXD), Pin 3 (Received Data—RXD) and Pin 7 (signal ground). The radio can be keyed with the use of the **DATAKEY** command.

   Additional connections may be required for some installations. Refer to the complete list of pin functions provided in Table 4 on page 14.

4. Measure and install the primary power for the radio. The red wire on the power cable is the positive lead; the black is negative.

NOTE: Use the radio in negative ground systems only.

5. Set the radio configuration. The transceiver is designed for quick installation with a minimum of software configuration required in most cases. The selections that *must* be made or verified for new installations are:

   - Transmit frequency
   - Receive frequency

   The operating frequencies are not set at the factory unless they were specified at the time of order. Determine the transmit and receive frequencies to be used, and follow the steps below to program them.

6. Connect a hand-held terminal (HHT) to the DIAG. connector. When the HHT beeps, press **ENTER** to receive the ready “>” prompt.

   - Set the operating frequencies using the **TX xxx.xxxxx** (transmit) and **RX xxx.xxxxx** (receive) commands.
   - Press **ENTER** after each command. After programming, the HHT reads **PROGRAMMED OK** to indicate successful entry.
   - Set other transceiver parameters as required. A complete list of transceiver commands is provided in *Section 5.0, TRANSCEIVER PROGRAMMING*.

3.2 Transceiver Mounting

Figure 6 shows the mounting dimensions of the transceiver.

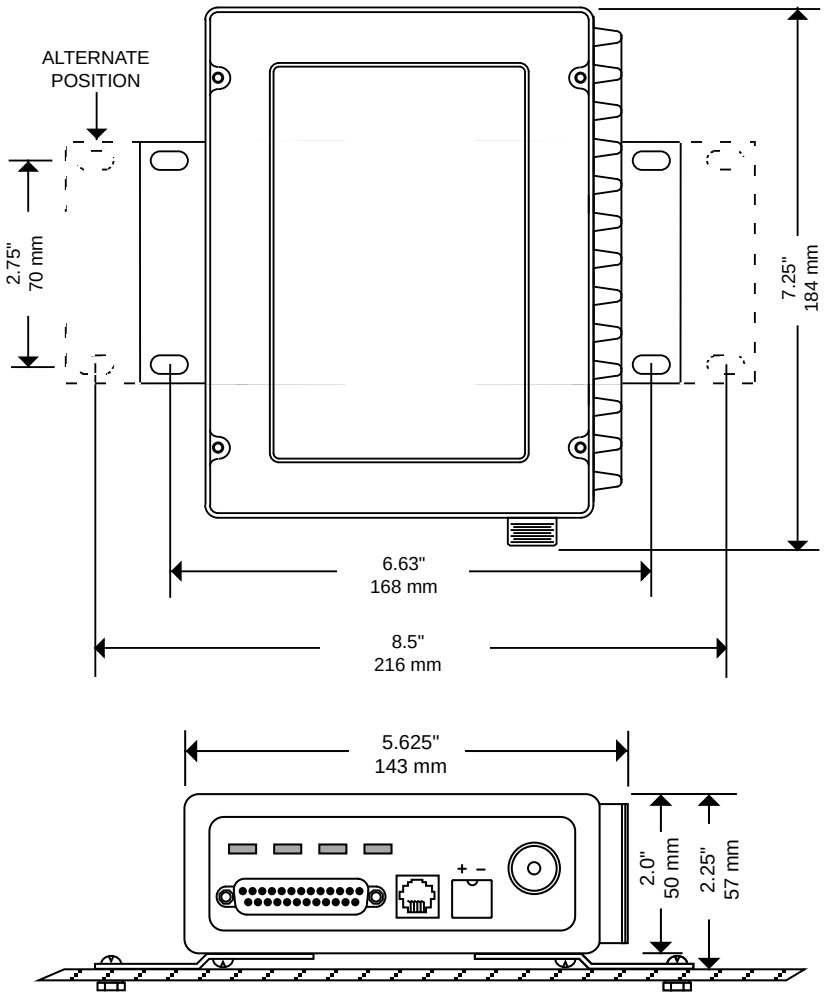

Figure 6. Transceiver Mounting Dimensions

3.3 Antennas and Feedlines

Antennas

The transceiver can be used with a number of antennas. The exact style depends on the physical size and layout of the radio system. A directional Yagi (Figure 7) or corner reflector antenna is generally recommended at remote sites to minimize interference to and from other users. Antennas of this type are available from several manufacturers.

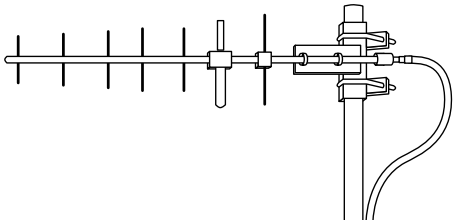

Figure 7. Typical Yagi Antenna (mounted to mast)

Feedlines

The selection of antenna feedline is very important. Poor quality cables should be avoided as they will result in power losses that may reduce the range and reliability of the radio system.

Table 3 shows the losses that will occur when using various lengths and types of cable at 200 MHz. Losses at 130-174 MHz will be slightly lower. Regardless of the type of cable used, it should be kept as short as possible to minimize signal loss

Table 3. Length vs. Loss in Coaxial Cables at 200 MHz†

Cable Type	3 Meters (10 Feet)	15 Meters (46 Feet)	30 Meters (91 Feet)	150 Meters (525 Feet)
RG-8A/U	0.32 dB	1.6 dB	3.2 dB	16 dB
1/2 inch HELIAX	0.10 dB	0.49 dB	0.98 dB	4.9 dB
7/8 inch HELIAX	0.05 dB	0.27 dB	0.54 dB	2.7 dB
1-1/4 inch HELIAX	0.04 dB	0.20 dB	0.40 dB	2.0 dB
1-5/8 inch HELIAX	0.03 dB	0.17 dB	0.33 dB	1.65 dB

† Cable loss slightly lower at 130-174 MHz.

3.4 Power Connection

The transceiver can be operated from any well-filtered 10.5 to 16 Vdc power source. The power supply should be capable of providing at least 2.5 amperes of continuous current.

The red wire on the power cable is the positive lead; the black is negative.

NOTE: The radio is designed for use only in negative ground systems.

3.5 Data Interface Connections

The transceiver's DATA INTERFACE connector is used to connect the transceiver to an external DTE data terminal that supports the EIA-232 (formally RS-232) format. The transceiver supports asynchronous data rates of up to 38400 bps. The data rate at the DATA INTERFACE connector may differ from the data rate used over the air.

Table 4 lists each pin on the DATA INTERFACE connector and describes its function.

CAUTION

USE ONLY REQUIRED PINS

Do not use a 25 wire (fully pinned) cable for connection to the DATA INTERFACE connector. Use *only* the required pins for the application. Damage may result if improper connections are made. Typical applications require the use of *only* Pins 1 through 8 for EIA-232 signaling.

3.6 Using the Radio's Sleep Mode

In some installations, such as at solar-powered sites, it may be necessary to keep the transceiver's power consumption to an absolute minimum. This can be accomplished using the Sleep Mode. In this mode, power consumption is reduced to less than 16 milliamperes (nominal).

Sleep mode can be enabled under RTU control by asserting a ground (or EIA-232 low) on Pin 12 of the radio's DATA INTERFACE connector.

When Pin 12 is opened (or an EIA-232 high is asserted), the radio will be ready to receive data within 75 milliseconds.

All normal functions are suspended while the radio is in sleep mode. The PWR LED will be off, except for a quick flash every 5 seconds.

Sleep Mode Example

The following example describes Sleep Mode implementation in a typical system. Using this information, you should be able to configure a system that will meet your own particular needs.

Example:

> Suppose you need communications to each remote site only once per hour. Program the RTU to raise an EIA-232 line once each hour (DTR for example) and wait for a poll and response before lowering it again. Connect this line to Pin 12 of the radio's DATA INTERFACE connector. This will allow each RTU to be polled once per hour with a significant savings in power consumption.

Table 4. DATA INTERFACE Connector Pinouts

Pin Number	Input/ Output	Pin Description
1	--	**Protective Ground.** Connects to ground (negative supply potential) on the radio's PC board and chassis.
2	IN	**TXD—Transmitted Data.** Accepts TX data from the connected device.
3	OUT	**RXD—Received Data.** Outputs received data to the connected device.
4	IN	**RTS—Request-to-Send Input.** Keys the transmitter when RTS is at logic high.
5	OUT	**CTS—Clear-to-Send Output.** Goes "high" after the programmed CTS delay time has elapsed (DCE) or keys an attached radio when RF data arrives (CTS KEY).
6	OUT	**DSR—Data Set Ready.** Provides a +6 Vdc DSR signal through a 2.5 kΩ resistor.
7	--	**Signal Ground.** Connects to ground (negative supply potential) at radio's PC board.
8	OUT	**DCD—Data Carrier Detect.** Goes "high" when the modem detects a data carrier from the master station.
9	IN	**Transmit Audio Input.** Connects to the audio output of an external (AFSK) modem. The input impedance is 600 Ω. Use Pin 7 for the modem's return lead.
10	OUT	**RUS—Receiver Unsquelched Sensor.** Not used in most installations, but is available as a convenience. Provides +8 Vdc through a 1 kΩ resistor whenever the receiver squelch is open, and drops to less than 1 Vdc when the squelch is closed.
11	OUT	**Receive Audio Output.** Connects to the audio input of an external (AFSK) modem. The output impedance is 600 Ω, and the level is factory set to suit most installations. Use Pin 7 for the modem's return lead.
12	IN	**Radio Inhibit (Sleep).** A ground on this pin places the radio into the "sleep" mode. It turns off most circuits in the radio, including transmit, receive, modem and diagnostic functions. This allows for greatly reduced power consumption, yet preserves the radio's ability to be quickly brought online.
13	--	Do not connect—Reserved for future use.
14	IN	**PTT—Push to Talk.** This line is used to key the radio with an active-high signal of +5 Vdc.
15	OUT	**Remote RTU Reset.** Do not connect—Reserved for future use.
16	IN	**$\overline{\text{PTT}}$—Push to Talk.** This line is used to key the radio with an active-low signal of 0 Vdc.
17	--	Do not connect—Reserved for future use.
18	IN/OUT	**Accessory Power.** Unregulated Input/Output. Provides a source of input power for low current accessories. Excessive drain on this connection will trip self-resetting fuse F1 on the transceiver PC board. The voltage at this pin will match the input voltage to the transceiver.

Table 4. DATA INTERFACE Connector Pinouts *(Continued)*

Pin Number	Input/ Output	Pin Description
19	OUT	**9.9 Vdc Regulated Output.** Provides a source of regulated voltage at 100 mA for low power accessories.
20	--	Do not connect—Reserved for future use.
21	OUT	**RSSI—Received Signal Strength Indication.** A DC voltmeter may be connected to this pin to read the relative strength of the incoming signal. Figure 8 is a chart showing RSSI vs. DC voltage.
22	--	Do not connect—Reserved for future use.
23	IN	**Diagnostic Channel Enable.** A ground on this pin causes the radio's microcontroller to open the DB-25 DATA INTERFACE for diagnostics and control instead of the normal RJ-11 DIAG. connection.
24	--	Do not connect—Reserved for future use.
25	OUT	**Alarm.** A logic low (less than 0.5 volts) on this pin indicates normal operation. A logic high (greater than 4 volts) indicates that some alarm condition is present. This pin can be used as an alarm output, provided the internal series resistance of 1 kΩ is considered.

4.0 OPERATION

In-service operation of the transceiver is completely automatic. Once the unit has been properly installed and configured, operator actions are limited to observing the front panel LED status indicators for proper operation.

If all parameters are correctly set, operation of the radio can be started by following these steps:

1. Apply DC power to the transceiver.

2. Observe the LED status panel for the proper indications (Table 5).

3. If not done earlier, refine the antenna heading of the station to maximize the received signal strength (RSSI) from the master station.

   Use the **RSSI** command from an HHT connected to the radio's DIAG. connector.—See *Section 5.0, TRANSCEIVER PROGRAMMING*. This can also be done with a DC voltmeter as described in *Section 4.2, RSSI Measurement*.

4.1 LED Indicators

Table 5 describes the function of each status LED.

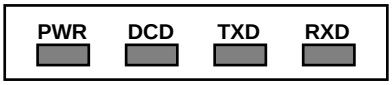

Table 5. LED Status Indicators

LED Name	Description
PWR	• Continuous—Power is applied to the radio, no problems detected. • Rapid flash (five times-per-second)—Fault indication. • Flashing once every 5 seconds—Radio is in Sleep mode.
DCD	• Flashing—Indicates the radio is receiving intermittent data frames. • Continuous—Radio is receiving a data signal from a continuously keyed radio.
TXD	An EIA-232 mark signal is being received at the DATA INTERFACE connector.
RXD	An EIA-232 mark signal is being sent out from the DATA INTERFACE connector.

4.2 RSSI Measurement

As an alternative to using an HHT, the radio's received signal strength (RSSI) may be read with a DC voltmeter connected to Pin 21 of the DATA INTERFACE connector. Figure 8 shows the relationship between received signal level and the DC voltage on Pin 21 of the DATA INTERFACE connector. (Note: Readings are not accurate for signals stronger than –50 dBm.)

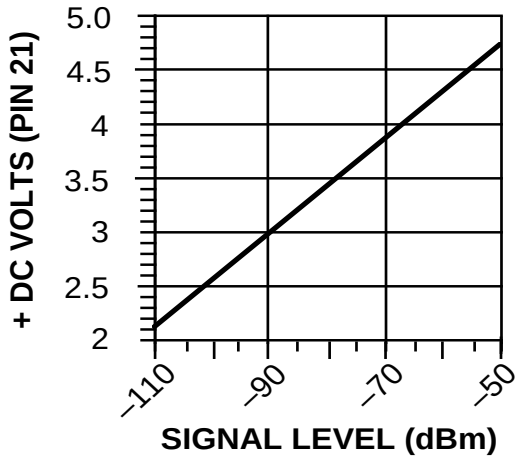

Figure 8. RSSI vs. Vdc (Typical)

5.0 TRANSCEIVER PROGRAMMING

Programming and control of the transceiver is performed through the radio's RJ-11 DIAG. (Diagnostics) connector with an MDS Hand-Held Terminal (MDS P/N 02-1501A01). This section contains a reference chart (Table 7) followed by detailed descriptions for each user command.

NOTE: In addition to HHT control, Windows-based software is available (MDS P/N 03-3156A01) to allow diagnostics and programming using a personal computer. An installation booklet and on-line instructions are included with the software. Contact MDS for ordering information.

5.1 Hand-Held Terminal Connection & Startup

This section gives basic information for connecting and using the MDS Hand-Held Terminal. For more information about the terminal, refer also to the instructions included with each HHT kit.

The steps below assume that the HHT has been configured for use with the transceiver (80 character screen display). If the HHT was previously used with a different model transceiver, or if its default settings have been changed, refer to *Section 5.2, Hand-Held Terminal Setup* for setup details.

Follow these steps to connect the HHT:

1. Connect the HHT's coiled cord to the DIAG. (RJ-11) jack on the radio as shown in Figure 9. This automatically places the radio into the control and programming mode.

   As an alternative, the DATA INTERFACE (DB-25) connector may be used for programming instead of the DIAG. jack. With this arrangement, Pin 23 of the HHT cable must be grounded to enable the diagnostic channel. (See Table 4.)

2. When the HHT is connected, it runs through a brief self-check, ending with a beep. After the beep, press **ENTER** to obtain the ready ">" prompt.

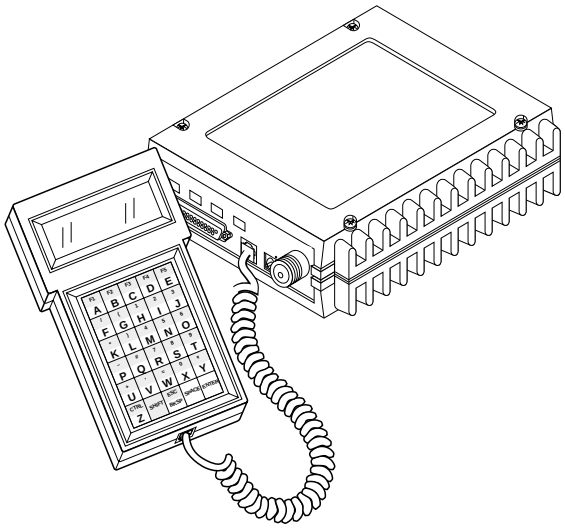

Figure 9. Hand-Held Terminal Connected to the Transceiver

5.2 Hand-Held Terminal Setup

The following is a set of instructions for re-initializing an HHT for use with the transceiver. These steps may be required if the HHT was previously used with a different radio, or if the HHT default settings have been inadvertently altered.

1. Plug the HHT into the DIAG. connector. Enable the setup mode by pressing the **SHIFT**, **CTRL** and **SPACE** keys in sequence. The display shown in Figure 10 appears.

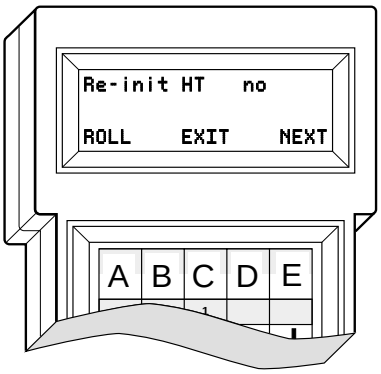

Figure 10. HHT Setup Display

2. The first of 15 menu items is displayed. Settings are reviewed by pressing the NEXT function controlled by the **E** key. Parameter settings are changed by pressing the ROLL function controlled by the **A** key.

3. Set up the HHT as listed in Table 6.

Table 6. HHT Operational Settings

Parameter	Setting	Parameter	Setting
Re-init HT	NO	Scroll On	33rd
Baud Rate	9600	Cursor	ON
Comm bits	8,1,n	CRLF for CR	OFF
Parity Error	OFF	Self Test	FAST
Key Repeat	OFF	Key Beep	ON
Echo	OFF	Screen Size	80
Shift Keys	YES	Menu Mode	LONG
Ctl Chars	PROCS		

5.3 Keyboard Commands

Table 7 is a reference chart of software commands for the transceiver. Programmable information is shown in brackets [ ] following the command name. See *Section 5.4, Detailed Command Descriptions* for detailed command descriptions.

Entering Commands

To enter a command, type the command, followed by an **ENTER** keystroke. For programming commands, the command is followed by **SPACE** and the appropriate information or values, then **ENTER**.

Here are some additional points to remember when using the HHT:

- Use the **SHIFT** key to access numbers; press again to return to letter mode.
- Use the **ESC/BKSP** key to edit information or commands entries.
- The flashing square cursor (▫) indicates that letter mode is selected.
- The flashing superscript rectangular cursor (▭) indicates that number mode is selected.

Error Messages

Listed below are some possible error messages that may be encountered when using the HHT:

UNKNOWN COMMAND—The command was not recognized. Refer to the command description for command usage information.

INCORRECT ENTRY—The command format or its associated values were not valid. Refer to the command description for command usage information.

COMMAND FAILED—The command was unable to successfully complete. This may indicate an internal software problem.

NOT PROGRAMMED—Software was unable to program the internal radio memory or the requested item was not programmed.This is a serious internal radio error. Contact MDS for assistance.

TEXT TOO LONG—Response to **OWN** or **OWM** command when too many characters have been entered. Refer to the command description for command usage information.

NOT AVAILABLE—The entered command or parameter was valid, but it referred to a currently unavailable choice. Refer to the command description for command usage information.

ACCESS DENIED—The command is unavailable to the user. Refer to the command descriptions for command information.

EEPROM FAILURE— The **INIT** command was unable to write to EEPROM. This is a serious internal radio error. Contact MDS for assistance.

Table 7. Command summary

Command name	Function
AMASK [0000 0000–FFFF FFFF] *Details page 22*	Set or display hex code identifying which events trigger an alarm.
ASENSE [HI/LO] *Details page 23*	Set or display the state of the alarm output signal to ACTIVE HI or ACTIVE LO.
BAUD [xxxxx abc] *Details page 23*	Set or display the DATA INTERFACE data rate and control bits.
BUFF [ON, OFF] *Details page 23*	Enables or disables the internal radio data buffer.
CTS [0–255] *Details page 24*	Set or display the Clear-to-Send delay in seconds.
CKEY [ON–OFF] *Details page 24*	Enables or disables the continuously keyed mode. Note: Remotes cannot receive when keyed.
DATAKEY [ON, OFF] *Details page 24*	Toggles between key-on-data and key-on-RTS.
DKEY *Details page 25*	Dekey the radio (transmitter OFF). This is generally a radio test command.
DLINK [ON/OFF/xxxx] *Details page 25*	Configures local diagnostic link protocol.
DMGAP [xx] *Details page 25*	(*Diagnostics*) Sets the amount of time to wait after the receipt of a character before interpreting the next received character as the start of a new message.

Table 7. Command summary *(Continued)*

Command name	Function
DTYPE [NODE/ROOT] *Details page 25*	(*Diagnostics*) Sets up a radio as a Root or Node radio. Associated commands are GATE and PEER. (See MDS' Network-Wide Diagnostics System Handbook (MDS P/N 05-3467A01) for details.)
DUMP *Details page 26*	Display all programmable settings.
HREV *Details page 26*	Display the Hardware Revision level.
INIT *Details page 26*	Set radio parameters to factory defaults.
INIT [2710] *Details page 26*	Restores certain transceiver defaults before using the **INIT xx20** command.
INIT [2720] *Details page 26*	Configure radio for use with an MDS model P-20 chassis.
KEY *Details page 27*	Key the radio (transmitter ON). This is generally used for radio testing.
MODEL *Details page 27*	Display the model number of the radio.
MODEM [xxxx, NONE] *Details page 27*	Set the modem characteristics of the radio.
OWM [XXX...] *Details page 27*	Set or display the owner's message.
OWN [XXX...] *Details page 27*	Set or display the owner's name.
PTT [0–255] *Details page 27*	Set or display the Push-to-Talk delay in milliseconds.
PWR [20–37] *Details page 27*	Set or display the transmit power setting.
RSSI *Details page 28*	Display the Received Signal Strength Indication.
RTU [ON/OFF/0-80] *Details page 28*	Enables or disables the radio's internal RTU simulator and sets the RTU address.
RX [xxx.xxxxx] *Details page 28*	Set or display receiver frequency.
RXTOT [NONE, 1-255] *Details page 28*	Set or display the value of the receive time-out timer.
SCD [0-255] *Details page 28*	Set or display the Soft-carrier Dekey delay in milliseconds.
SER *Details page 28*	Display the radio serial number.
SHOW [DC, PORT, PWR] *Details page 29*	Display the DC voltages, diagnostics port, and transmit power level.
SREV *Details page 29*	Display the Software Revision Level.
STAT *Details page 29*	Display radio status and alarms.

Table 7. Command summary *(Continued)*

Command name	Function
TEMP *Details page 29*	Display the internal temperature of the radio in degrees Celsius.
TOT [1-255, ON, OFF] *Details page 30*	Set or display the Time-out Timer delay in milliseconds.
TX [xxx.xxxxx] *Details page 30*	Set or display the transmit frequency.
UNIT [10000...65000] *Details page 30*	Set or display the transceiver's unit address.

5.4 Detailed Command Descriptions

The only *critical* commands for most applications are transmit and receive frequencies (**RX xxx.xxxxx, TX xxx.xxxxx**). However, proper use of the additional commands allows you to tailor the transceiver for a specific use, or conduct basic diagnostics on the radio. This section gives more detailed information for the user commands previously listed in Table 7.

In many cases, the commands shown here can be used in two ways. First, you can type *only* the command name to view the currently programmed data. Secondly, you can set or change the existing data by typing the command, followed by a space, and then the desired entry. In the list below, allowable programming variables, if any, are shown in brackets following the command name.

AMASK [0000 0000–FFFF FFFF]

The **AMASK** (alarm mask) command displays or sets which events cause the alarm output signal to be active. Normally, the mask is **FFFF FFFF**, meaning that any of the 32 possible events will activate the alarm output signal. No special configuration is required for typical applications.

Entering the **AMASK** command alone displays the current setting of alarm events in hexadecimal format.

Entering the **AMASK** command followed by an eight-digit hexadecimal number reprograms the specified events to trigger an alarm.

The eight-digit hexadecimal number used as the command parameter is used to classify up to 32 events as alarm triggers for the alarm output status line. (See Table 8 on page 32 for a list of event codes.) The hex value for the mask corresponds to the hex value for the **STAT** command (see the **STAT** command description).

Each bit that is a ‘1’ identifies an associated alarm condition that can trigger the alarm output status line. Each bit that is a ‘0’ treats the associated alarm as irrelevant when deciding whether or not to assert the alarm output status line. For more information on tailoring the alarm response, contact the MDS Technical Services Department.

ASENSE [HI/LO]

The **ASENSE** command sets or displays the sense of the alarm output at Pin 25 of the DATA INTERFACE connector.

Entering the **ASENSE** command alone shows whether the alarm output is active high or low. Entering the **ASENSE** command followed by **HI** or **LO** resets the alarm output to active high or low.

BAUD [xxxxx abc]

This command sets (or displays) the communication attributes for the DATA INTERFACE port. It has no effect on the RJ-11 DIAG. port.

The first parameter (**xxxxx**) is baud rate. Baud rate is specified in bits-per-second (bps) and must be one of the following speeds: 110, 300, 1200, 2400, 4800, 9600, 19200, or 38400.

The second parameter of the **BAUD** command (**abc**) is a three-character block indicating how the data is encoded:

a = Data bits (7 or 8)
b = Parity (N for None, O for Odd, E for Even)
c = Stop bits (1 or 2)

The factory default setting is 4800 baud, 8 data bits, no parity, 1 stop bit (Example: **4800 8N1**).

NOTE: 7N1, 8O2, and 8E2 are invalid communication settings and are not supported by the transceiver.

BUFF [ON, OFF]

This command sets or displays the received data handling mode of the radio. The command parameter is either **ON** or **OFF**. The default is **ON**. The setting of this parameter affects the timing of how received RF data is sent out the INTERFACE connector. Outgoing (transmitted) data is not affected by this setting.

If data buffering is **OFF**, the radio operates with the lowest possible average latency. Data bytes are thus sent out the INTERFACE port as soon as an incoming RF data frame is disassembled. Average and typical latency will both be below 10 ms, but idle character gaps may be introduced into the outgoing data flow.

If data buffering is **ON**, the radio operates in seamless mode. Data bytes will be sent over the air as quickly as possible, but the receiver buffers (stores) the data until enough bytes have arrived to cover worst-case gaps in transmission. This mode of operation is required for protocols such as MODBUS™ that do not allow gaps in their data transmission.

Note that seamless mode (**BUFF ON**) is intended only for applications where the transmitter's baud rate is greater than or equal to the receiver's baud rate. Adherence to this rule is left up to the user.

CKEY [ON–OFF]

The **CKEY** command enables or disables the continuously-keyed function of the radio. When **CKEY** is set to **ON**, the radio is continuously keyed.

CTS [0–255]

The **CTS** (clear-to-send) command selects or displays the timer value associated with the CTS line response. The command parameter ranges from 0 to 255 milliseconds.

For DCE operation, the timer specifies how long to wait after the RTS line goes high, before the radio asserts CTS and the DTE can transmit the data. A CTS value of zero keys the radio and asserts the CTS line immediately after the RTS line goes high.

For CTS Key operation (see **DEVICE** command), the timer specifies how long to wait after asserting the CTS, before sending data out the DATA INTERFACE port. A timer value of zero means that data will be sent out the data port without imposing a key-up delay. (Other delays may be present based on selected radio operating parameters.)

DATAKEY [ON, OFF]

The **DATAKEY** command sets or displays the ability of the radio to key the transmitter as data is received at the DATA INTERFACE connector. Asserting RTS keys the radio regardless of this command setting.

If **DATAKEY** is set to **ON**, the radio will key when a full data-character is received at the transceiver's DATA INTERFACE connector. If **DATAKEY** is set to **OFF**, the radio needs to be keyed by asserting either the RTS or PTT signal or with the **CKEY** or **KEY** command.

DEVICE [DCE, CTS KEY]

The **DEVICE** command sets or displays the device behavior of the radio. The command parameter is either **DCE** or **CTS KEY**.

The default selection is **DCE**. In this mode, CTS will go high following RTS, subject to the CTS programmable delay time. If the **DATAKEY** command is set to **ON**, keying can be stimulated by the input of characters at the data port. Hardware flow control is implemented by signaling the CTS line if data arrives faster than it can be buffered and transmitted.

If **CTS KEY** is selected, the radio is assumed to be controlling another radio. The RTS line is ignored and the CTS line is used as a keyline control for the other radio. CTS is asserted immediately following the receipt of RF data, but data will not be sent out the DATA INTERFACE port until after the CTS programmable delay time has expired. (This gives the other radio time to key.)

DKEY

This command deactivates the transmitter after it has been keyed with the **KEY** command.

DLINK [ON/OFF/xxxx]

This command is used to configure the local diagnostic link protocol used in network-wide diagnostics.

Entering **DLINK ON** enables the diagnostic link. Entering **DLINK OFF** disables the diagnostic link.

To change the diagnostic link, enter **DLINK** followed by one of the following baud rates: 1200, 2400, 4800, 9600, 19200 (default).

DMGAP [xx]

The **DMGAP** command sets the amount of time in milliseconds to wait after the receipt of a character before interpreting the next received character as the start of a new message. When data port baud rates are slow, the gap between characters within a poll may be so long that the radio interprets the next character as the start of a new poll. When diagnostics is being performed using passive messaging (see *Performing Network-Wide Remote Diagnostics* on page 34), this command may be used to change this behavior.

DTYPE [NODE/ROOT]

This command establishes the local radio as a root radio or node radio for network-wide diagnostics. Entering **DTYPE NODE** configures the radio as a node radio. Entering **DTYPE ROOT** configures the radio as a root radio. Entering the **DTYPE** command alone displays the current setting. See “Performing Network-Wide Remote Diagnostics” on page 34. Two associated commands are **GATE** and **PEER**. See MDS’ Network-Wide Diagnostics System Handbook (MDS P/N 05-3467A01) for details.

DUMP

This command displays all the programmed settings of the radio. The HHT display is too small to list all the command settings at one time. Therefore, this command is most useful if the command is issued from a computer or full-screen terminal.

HREV

This command displays the transceiver's hardware revision level.

INIT

The **INIT** command is used to re-initialize the radio's operating parameters to the factory defaults. This may be helpful when trying to resolve configuration problems that may have resulted from the entry of one or more improper command settings. Entry of this command allows you to get back to a known working state. The following changes to the radio are made when **INIT** is entered:

- **CTS** is set to 0
- **DATAKEY** is set to **ON**
- **DEVICE** is set to **DCE**
- **PTT** is set to 0
- **SCD** is set to 0
- **TOT** is set to 30 seconds and set to **ON**
- **PWR** is set to +37 dBm (5 watts)

All other commands stay at their previously established settings.

INIT [2710]

This command sets the transceiver for operation *outside* the MDS model P-20 chassis by setting the following parameters as shown.

ASENSE	**ACTIVE HI**
AMASK	**FFFF FFFF** (assert alarm output on all alarms)
RXTOT	**NONE** (receive time-out timer disabled)

This command can be used subsequent to using the **INIT 2720** command to restore the standard transceiver defaults.

INIT [2720]

This command sets the transceiver for operation *inside* the model P-20 chassis by setting the following parameters as shown.

ASENSE	**ACTIVE LO**
AMASK	**FFFF 0000** (trigger on major alarms)
RXTOT	**20** (20 minute time-out timer)

KEY

This command activates the transmitter. See also the **DKEY** command.

MODEL

This command displays the radio's model number code.

MODEM [xxxx, NONE]

This command selects the radio's modem characteristics. Enter 9600 or 3200 for digital operation, or enter NONE to select analog operation. For MDS 1710 digital operation the proper settings are **9600** for the MDS 2710A, **19200** for the MDS 1710C, and **4800** for the MDS 1710F.

For MDS 2710 operation, the proper settings are **3200** for the MDS 2710D, **9600** for the MDS 2710A, and **19200** for the MDS 2710C.

OWM [XXX...]

This is a command to display or program an owner's message. To program the owner's message, type **OWM** then the message, followed by **ENTER**.

To display the owner's message, type **OWM** then **ENTER**. The owner's message appears on the display.

OWN [XXX...]

This is a command to display or program an owner's name. To program the owner's name, type **OWN** then the name, followed by **ENTER**.

To display the owner's name, type **OWN** then **ENTER**. The owner's name appears on the display.

PTT [0–255]

This command sets or displays the key-up delay in milliseconds.

This timer specifies how long to wait after the radio receives a key signal from either the PTT or RTS lines (on the DATA INTERFACE), before actually keying the radio.

PWR [20–37]

NOTE: This function may not be available, depending on certification requirements in a particular country.

This command displays or sets the desired RF forward output power setting of the radio. The **PWR** command parameter is specified in dBm and can range from 20 through 37. The default setting is 37 dBm (5 watts). To read the actual (measured) power output of the radio, use the **SHOW PWR** command. A dBm-to-watts conversion chart is provided in Section 7.6.

RSSI

This command continuously displays the radio's Received Signal Strength Indication (RSSI) in dBm units, until you press the Enter key. Incoming signal strengths from –50 dBm to –120 dBm can be read.

RTU [ON/OFF/0-80]

This command re-enables or disables the radio's internal RTU simulator, which runs with MDS' proprietary polling programs (poll.exe and rsim.exe). The internal RTU simulator is available whenever a radio has diagnostics enabled. This command also sets the RTU address that the radio will respond to.

The internal RTU can be used for testing system payload data or *pseudo* bit error rate testing. It can also be helpful in isolating a problem to either the external RTU or the radio.

RX [xxx.xxxxx]

This command selects or displays the radio's receive frequency in MHz. The frequency step size is 6.25 kHz for the MDS 2710A/C and 5.0 kHz for the MDS 2710D.

If the customer frequency has not been programmed at the factory, a default frequency will be programmed in the radio near the center of the frequency band.

RXTOT [NONE, 1-255]

The **RXTOT** command selects or displays the receive time-out timer value in minutes. This timer triggers an alarm (event 12) if data is not detected within the specified time.

Entering the **RXTOT** command without a parameter displays the timer value in minutes. Entering the **RXTOT** command with a parameter ranging from 0 to 255 resets the timer in minutes. Entering the **RXTOT** command with the parameter **NONE** disables the timer.

SCD [0-255]

This command displays or changes the soft-carrier dekey delay in milliseconds.

This timer specifies how long to wait after the removal of the keying signal before actually releasing the transmitter. A value of 0 milliseconds will unkey the transmitter immediately after the removal of the keying signal.

SER

This command displays the radio's serial number as recorded at the factory.

SHOW [DC, PORT, PWR]

The **SHOW** command displays different types of information based on the command variables. The different parameters are:

- **DC**—Display DC input/output voltages
- **PORT**—Display the connector port (RJ-11 or DB-25) that is active for diagnostics and control.
- **PWR**—Display RF power output

SNR

This command continuously displays the signal-to-noise ratio of the received signal expressed in dB, until you press the Enter key. As used in this guide, the signal-to-noise measurement is based upon the signal level following equalization, for received frames.

The SNR is an indication of the received signal quality. The SNR indication ranges from 10 dB to 33 dB. A value of 10 dB represents a very poor signal. A value of 24 dB represents a very good signal.

When the SNR command is used, it causes the DIAG. port to enter an update mode, and the signal-to-noise ratio is updated and redisplayed every 2 seconds. The SNR continuously updates until the **ENTER** key is pressed.

SREV

This command displays the software revision level of the transceiver firmware.

STAT

This command displays the current alarm status of the transceiver.

If no alarms exist, the message **NO ALARMS PRESENT** appears at the top of the HHT display.

If an alarm does exist, a two-digit code (00–31) is displayed and the alarm is identified as “Major” or “Minor.” A brief description of the alarm code is also given.

If more than one alarm exists, the word **MORE** appears at the bottom of the screen and additional alarms are viewed by pressing the **ENTER** key. Detailed descriptions of event codes are provided in Table 8 on page 32.

TEMP

This command displays the internal temperature of the transceiver in degrees Celsius.

TOT [1-255, ON, OFF]

This command sets or displays the transmitter Time-out Timer value (1–255 seconds), as well as the timer status (**ON** or **OFF**). If the timer is on, and the radio remains keyed for a longer duration than the **TOT** value, the transmitter is automatically unkeyed.

When this happens, the radio must be commanded back to an unkeyed state before a new keying command is accepted. The default timer value is 30 seconds.

TX [xxx.xxxxx]

This command selects or displays the radio's transmit frequency in MHz. The frequency step size is 6.25 kHz for the MDS 2710A/C and 5.0 kHz for the MDS 2710D.

If the customer frequency has not been programmed at the factory, a default frequency will be programmed in the radio near the center of the frequency band.

UNIT [10000...65000]

This command selects or displays the radio's unit address. The factory default setting is the last five digits of the transceiver's serial number. The unit address is used in network diagnostics. See MDS' Network-Wide Diagnostics System Handbook (MDS P/N 05-3467A01) for more information.

6.0 TROUBLESHOOTING

Successful troubleshooting of the radio system is not difficult, but it requires a logical approach. It is best to begin troubleshooting at the master station, as the rest of the system depends on the master for polling commands. If the master station has problems, the operation of the entire network can be compromised.

It is good practice to start by checking the simple things. For proper operation, all radios in the network must meet these basic requirements:

- Adequate and stable primary power. The radio contains an internal self-resetting fuse (4A). Remove and re-apply primary power to reset.
- Secure connections (RF, data and power)
- An efficient and properly aligned antenna system with a good received signal strength (at least –90 dBm). It is possible for a system to operate with weaker signals, but reliability will be degraded.
- Proper programming of the transceiver's operating parameters (see *Section 5.0, TRANSCEIVER PROGRAMMING*).

- The correct interface between the transceiver and the connected data equipment (correct cable wiring, proper data format, timing, etc.)

6.1 LED Indicators

The LED status indicators are an important troubleshooting tool and should be checked whenever a problem is suspected. Table 5 on page 16 describes the function of each status LED.

6.2 Event Codes

When an alarm condition exists, the transceiver creates a code that can be read on an HHT connected to the DIAG. port. These codes can be very helpful in resolving many system difficulties. Refer to Table 8 for a definition of the event codes.

Checking for Alarms—*STAT command*

To check for alarms, enter **STAT** on the HHT. If no alarms exist, the message **NO ALARMS PRESENT** appears at the top of the display (Figure 11).

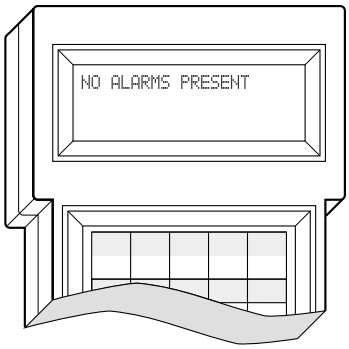

Figure 11. HHT Display in Response to STAT Command

If an alarm does exist, a two-digit alarm code (00–31) is displayed and the event is identified as a Major or Minor Alarm. A brief description of the alarm is also given.

If more than one alarm exists, the word **MORE** appears at the bottom of the screen. To view additional alarms, press **ENTER**.

Major Alarms vs. Minor Alarms

Major Alarms—report serious conditions that generally indicate a hardware failure, or other abnormal condition that will prevent (or seriously degrade) further operation of the transceiver. Major alarms generally indicate the need for factory repair. Contact MDS for further assistance.

Minor Alarms—report conditions that, under most circumstances will not prevent transceiver operation. This includes out-of-tolerance conditions, baud rate mismatches, etc. The cause of these alarms should be investigated and corrected to prevent eventual system failure.

Event Code Definitions

Table 8 contains a listing of all event codes that may be reported by the transceiver.

Table 8. Event Codes

Event Code	Event Class	Description
01	Major	Improper software detected for this radio model.
02	Major	The model number of the transceiver is unprogrammed.
04	Major	One or both of the internal programmable synthesizer loops is reporting an out-of-lock condition.
06	Major	An unrecoverable fault was detected on the A-to-D chip. The radio will not receive data.
07	Major	One or more of the radio's internal voltage regulators is reporting a failure. The radio will not operate.
08	Major	The system is reporting that it has not been calibrated. Factory calibration is required for proper radio operation.
09	--	Not used.
10	Major	The internal microcontroller was unable to properly program the system to the appropriate EEPROM defaults. A hardware problem may exist.
11	--	Not used.
12	Major	Receiver time-out. No data received within the specified receiver time-out time.
13	Major	Transmitter time-out. The radio was keyed for a duration exceeding the time-out timer setting. (This alarm clears the next time the radio keys.)
14–15	--	Not used.
16	Minor	Not used.
17	Minor	A data parity fault has been detected on the DATA INTERFACE connector. This usually indicates a parity setting mismatch between the radio and the RTU.
18	Minor	A data framing error has been detected on the DATA INTERFACE connector. This may indicate a baud rate mismatch between the radio and the RTU.
19–24	--	Not used.
25	Minor	The 5.6 volt power regulator is out-of-tolerance. If the error is excessive, operation may fail.
26	Minor	The DC input voltage is out-of-tolerance. If the voltage is too far out of tolerance, operation may fail.
27, 28	--	Not used
31	Minor	The transceiver's internal temperature is approaching an out-of-tolerance condition. If the temperature drifts outside of the recommended operating range, system operation may fail.

7.0 TECHNICAL REFERENCE

7.1 Transceiver Specifications

TRANSMITTER SYSTEM SPECIFICATION

Operating Frequency:	See Transmitter Specifications
Frequency Stability:	±1.5 ppm
Adjacent Channel Power:	–65 dBc (MDS 1710A/2710A) –60 dBc (MDS 1710C/2710C) –55 dBc (MDS 1710F/2710D)
Carrier Power Accuracy:	±2 dB

RECEIVER SYSTEM SPECIFICATION

Operating Frequency:	See Receiver Specifications
Maximum Usable Sensitivity:	–111 dBm for 1 x 10^{-6} BER
Co-Channel Rejection:	–12 dB

DATA CHARACTERISTICS

Signaling Standard:	EIA-232
Connector:	DB-25 Female
Data Interface Rates:	110 bps to 38.4 kbps1200, 2400, 4800, 9600, 19200, 38400 bps—asynchronous
Data Latency:	10 ms maximum, including RTS/CTS delay
Byte Length:	10 or 11 bits

TRANSMITTER

Frequency Range:	220-240 MHz (MDS 2710A/D) 130-174 MHz (MDS 1710A/C/F) 220-222 MHz (MDS 2710D) *See Figure 4 on Page 4 for detailed listing*
Modulation Type:	Binary CPFSK
Carrier Power:	0.1 Watts to 5 Watts @13.8 Vdc
Duty Cycle:	Continuous
Output Impedance:	50 ohms
Frequency Stability:	MDS 1710 ±1.0 ppm MDS 2710 ±1.5 ppm
Channel Spacing:	6.25 kHz steps (MDS 1710A/C/F and 2710A/C) 5.0 kHz steps (MDS 2710D) 6.25 kHz (MDS 1710A/C/F @ 130-174 MHz)
Transmitter Spurious Radiated Emissions:	–57 dBm, 30 MHz to 1 GHz –47 dBm, 1 GHz to 12.5 GHz
Harmonics:	
2nd harmonic:	57 dBc
3rd harmonic & higher:	57 dBc
Time-out Timer:	30 seconds (default). Selectable with **TOT** command
Transmitter Keying:	Data activated or RTS

RECEIVER

Frequency Range:	220-240 MHz (MDS 2710A/D) 130-174 MHz (MDS 1710A/C/F) 220-222 MHz (MDS 2710D) *See Figure 4 on Page 4 for detailed listing*
Type:	Double conversion superheterodyne
Frequency Stability:	±1.5 ppm
Maximum Usable Sensitivity:	–111 dBm for 1 x 10^{-6} BER
Spurious Response Rejection:	70 dB
Intermodulation Response Rejection:	65 dB
Receiver Spurious Conducted Emissions:	–57 dBm, 9 kHz to 1 GHz –47 dBm, 1 GHz to 12.5 GHz
Receiver Spurious Radiated Emissions:	–57 dBm, 30 MHz to 1 GHz –47 dBm, 1 GHz to 12.5 GHz
Bandwidth:	5 kHz (MDS 2710D) 6.25 kHz (MDS 1710F) 12.5 kHz (MDS 1710A, 2710A) 25 kHz (MDS 1710C, 2710C)

PRIMARY POWER

Voltage:	13.8 Vdc Nominal (10.5 to 16 Vdc)
TX Supply Current:	2.5 amps max
RX Supply Current:	*Operational*—150 mA (nominal) *Standby (sleep)*—18 mA
Fuse:	4 Amp Polyfuse, Self-Resetting, Internal (Remove Primary Power to Reset)
Reverse Polarity Protection:	Diode across primary input

ENVIRONMENTAL

Humidity:	95% at 40 degrees C
Temperature Range:	–30 to 60 degrees C (full performance) –40 to 70 degrees C (operational)
Weight:	1.6 kilograms
Case:	Die-cast Aluminum

DIAGNOSTICS INTERFACE

Signaling Standard:	EIA-232
Connector:	RJ-11 (may use radio's DB-25 instead if Pin 23 is grounded to enable diagnostics channel)
I/O Devices:	MDS Hand Held Terminal or PC with MDS software

7.2 Performing Network-Wide Remote Diagnostics

Diagnostics data from a remote radio can be obtained by connecting a laptop or personal computer running MDS InSite diagnostics software to any radio in the network.

Figure 12 shows an example of a setup for performing network-wide remote diagnostics from both a Root (master station) location, and a Node (remote station) location.

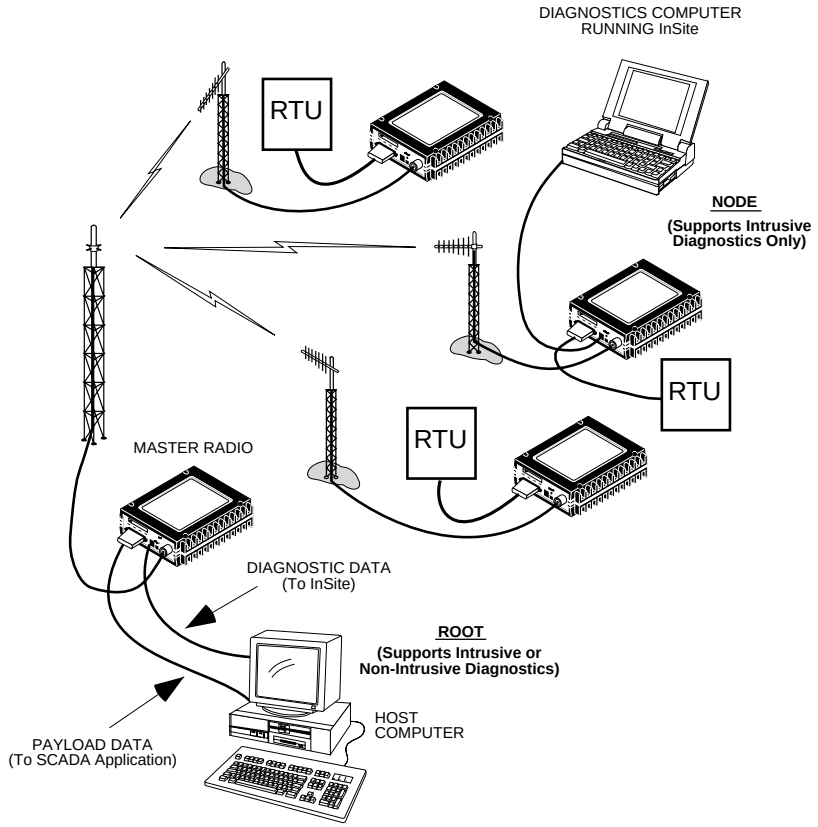

Figure 12. Network-Wide Remote Diagnostics Setup

If a PC is connected to any radio in the network, intrusive polling (polling which briefly interrupts payload data transmission) can be performed. To perform diagnostics without interrupting payload data transmission, connect the PC to a radio defined as the “root” radio. A radio is defined as a root radio using the **DTYPE ROOT** command locally, at the radio.

A complete explanation of remote diagnostics can be found in MDS’ Network-Wide Diagnostics System Handbook (MDS P/N 05-3467A01). See the Handbook for more information about the basic diagnostic procedures outlined below.

1. Program one radio in the network as the root radio by entering the **DTYPE ROOT** command at the radio.

2. At the root radio, use the **DLINK ON** and **DLINK [baud rate]** commands to configure the diagnostic link protocol on the RJ-11 port.

3. Program all other radios in the network as nodes by entering the **DTYPE NODE** command at each radio.

4. Use the **DLINK ON** and **DLINK [baud rate]** commands to configure the diagnostic link protocol on the RJ-11 port of each node radio.

5. Connect same-site radios using a null-modem cable at the radios' diagnostic ports.

6. Connect a PC on which MDS InSite software is installed to the root radio, or to one of the nodes, at the radio's diagnostic port. (This PC may be the PC being used to collect payload data, as shown in Figure 12.)

   To connect a PC to the radio's DIAG. port, an RJ-11 to DB-9 adapter (MDS P/N 03-3246A01) is required. If desired, an adapter cable may be constructed from scratch using the information shown in Figure 13.

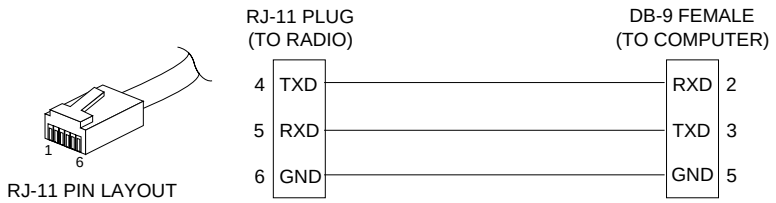

Figure 13. RJ-11 to DB-9 Adapter Cable

7. Launch the MDS InSite application at the PC. (See the MDS InSite User's Guide for instructions.)

7.3 Bench Testing Setup

Figure 14 shows a sample test setup that can be used to verify the basic operation of transceivers in a shop setting. The test can be performed with any number of remote radios by using a power divider with the required number of output connections.

The RTU simulator shown in the test setup (MDS Part No. 03-2512A01) is a microcontroller that emulates a remote terminal unit operating at 1200, 2400, 4800, or 9600 bps. Custom software is supplied with the RTU simulator that allows continuous polling of remote radios using an IBM-compatible personal computer. The software reports the number of polls sent, polls received, and the number of errors detected.

As an alternative to using an external RTU simulator, the transceiver's internal RTU simulator may be used (see **RTU** command in Table 7 on page 20). (This will not provide as conclusive a test as an external simulator because it does not utilize the transceiver's data connector.)

NOTE: It is very important to use attenuation between all units in the test setup. The amount of attenuation required will depend on the number of units being tested and the desired signal strength (RSSI) at each transceiver during the test. In no case should a signal greater than –50 dBm be applied to any transceiver in the test setup.

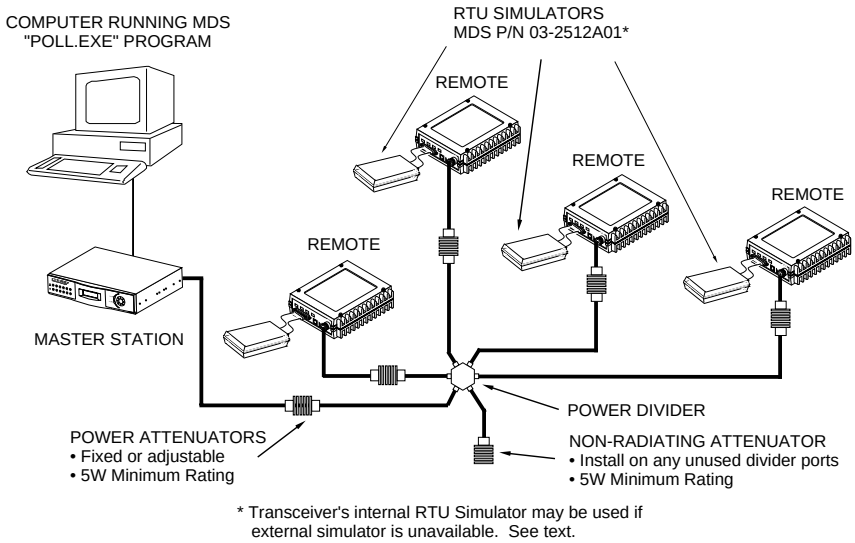

Figure 14. Typical setup for bench testing of radios

7.4 Helical Filter Adjustment

If the operating frequency of the radio is changed significantly, the helical filters should be adjusted for maximum received signal strength (RSSI). To adjust the filters, proceed as follows:

1. Remove the top cover from the transceiver by loosening the four screws and lifting straight up.

2. Locate the helical filters on the PC board. See Figure 15.

3. Apply a steady signal to the radio at the programmed receive frequency (–80 dBm level recommended; no stronger than –60 dBm). This can be done with a signal generator or an over-the-air signal.

4. Measure the radio's RSSI using one of the following methods:

   - With an HHT (See *Section 5.0, TRANSCEIVER PROGRAMMING* on page 17).
   - With MDS Radio Configuration Software (See *Section 7.5, Upgrading the Radio's Software* on page 38).
   - With a voltmeter connected to Pin 21 of the DATA INTERFACE connector (See *Section 4.2, RSSI Measurement* on page 16).

5. With a non-metallic adjustment tool, adjust each section of the helical filter for maximum RSSI. Re-install the cover to the transceiver.

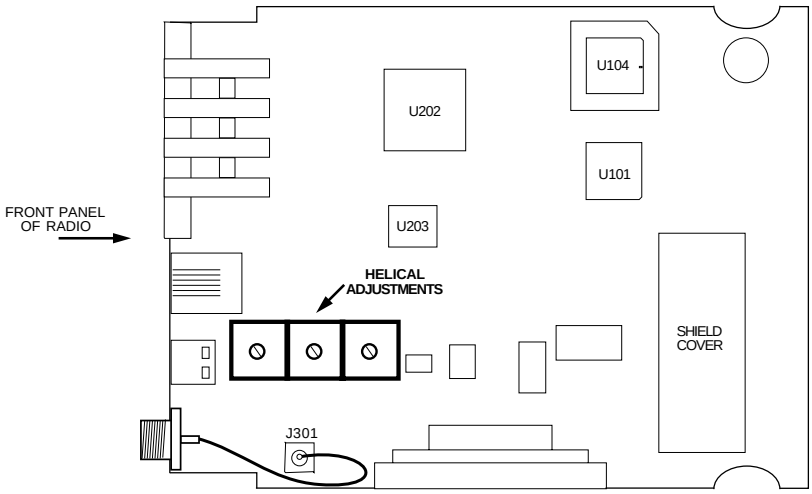

Figure 15. Helical Filter Location

7.5 Upgrading the Radio's Software

From time to time, new product features or software maintenance files may become available from MDS. This section describes the steps necessary to install new software into the transceiver using a PC connected to the radio's DIAG. port.

Upgrade software can be obtained in a number of ways. The MDS Web site at **www.microwavedata.com** contains an FTP area with software files for several radio models. You can browse the listings to see if there are files pertaining to your particular model. There is no charge for this service.

In addition, you can also contact MDS to request radio software. Software files may be sent to you via e-mail, or on a 3.5" diskette. There may be a nominal charge for the software depending on the nature of the upgrade.

NOTE: Software upgrades are distributed as ASCII files with a ".S28" extension. These files use the Motorola S-record format.

Using Radio Software Upgrade Diskette

A software upgrade diskette may be purchased from MDS to add new product features to the radio such as Network-wide Diagnostics. The upgrade kit includes a diskette (MDS P/N 06-3501A01) with the most current radio software, authorization codes, and an instruction booklet. Contact MDS for ordering information. When calling, please have the serial number(s) available for the radio(s) that you wish to upgrade.

The upgrade software can be run on an IBM-compatible computer connected to the radio's DIAG. port via an RJ-11 to DB-9 adapter (MDS P/N 03-3246A01). If desired, an adapter cable may be constructed from scratch using the information shown in Figure 13.

To initiate the upgrade, insert the upgrade diskette in Drive A:. Set the working directory to **A:** (example: from a DOS prompt type **A:**). Next, type **UPGRADE** and press the **ENTER** key. (If you have the radio connected via the Com2 serial port, type **UPGRADE-2** instead.) The upgrade software will normally run automatically without any further prompts.

The radio's PWR LED will flash rapidly to confirm that a download is in process. The download takes about two minutes.

NOTE: If a software download fails, the radio is left unprogrammed and inoperative. This is indicated by the PWR LED flashing slowly (1 second on, 1 second off). This condition is only likely if a power failure occurred to the computer or radio during the downloading process. The download can be attempted again when the fault has been corrected.

Using Radio Configuration Software

If you already have software that you wish to download into the transceiver, Radio Configuration Software (MDS P/N 03-3156A01) may be used to perform the installation. To use this method, proceed as follows:

Connect a PC to the radio's DIAG. port via an RJ-11 to DB-9 adapter (MDS P/N 03-3246A01). If desired, an adapter cable may be constructed from scratch using the information shown in Figure 13.

Run the Radio Configuration software. Under the **SYSTEM** menu, select **RADIO SOFTWARE UPGRADE.** Follow the prompts and online instructions to locate the desired software and complete the upgrade.

The radio's PWR LED will flash rapidly to confirm that a download is in process. The download takes about two minutes.

NOTE: If a software download fails, the radio is left unprogrammed and inoperative. This is indicated by the PWR LED flashing slowly (1 second on, 1 second off). This condition is only likely if a power failure occurred to the computer or radio during the downloading process. The download can be attempted again when the fault has been corrected.

7.6 dBm-Watts-Volts Conversion Chart

Table 9 is provided as a convenience for determining the equivalent wattage or voltage of an RF power expressed in dBm.

Table 9. dBm-Watts-Volts Conversion—for 50 Ohm Systems

dBm	V	Po
+53	100.0	200W
+50	70.7	100W
+49	64.0	80W
+48	58.0	64W
+47	50.0	50W
+46	44.5	40W
+45	40.0	32W
+44	32.5	25W
+43	32.0	20W
+42	28.0	16W
+41	26.2	12.5W
+40	22.5	10W
+39	20.0	8W
+38	18.0	6.4W
+37	16.0	5W
+36	14.1	4W
+35	12.5	3.2W
+34	11.5	2.5W
+33	10.0	2W
+32	9.0	1.6W
+31	8.0	1.25W
+30	7.10	1.0W
+29	6.40	800mW
+28	5.80	640mW
+27	5.00	500mW
+26	4.45	400mW
+25	4.00	320mW
+24	3.55	250mW
+23	3.20	200mW
+22	2.80	160mW
+21	2.52	125mW
+20	2.25	100mW
+19	2.00	80mW
+18	1.80	64mW
+17	1.60	50mW
+16	1.41	40mW
+15	1.25	32mW
+14	1.15	25mW
+13	1.00	20mW
+12	.90	16mW
+11	.80	12.5mW
+10	.71	10mW
+9	.64	8mW
+8	.58	6.4mW
+7	.500	5mW
+6	.445	4mW
+5	.400	3.2mW
+4	.355	2.5mW
+3	.320	2.0mW
+2	.280	1.6mW
+1	.252	1.25mW

dBm	V	Po
0	.225	1.0mW
-1	.200	.80mW
-2	.180	.64mW
-3	.160	.50mW
-4	.141	.40mW
-5	.125	.32mW
-6	.115	.25mW
-7	.100	.20mW
-8	.090	.16mW
-9	.080	.125mW
-10	.071	.10mW
-11	.064	
-12	.058	
-13	.050	
-14	.045	
-15	.040	
-16	.0355	

dBm	mV	Po
-17	31.5	
-18	28.5	
-19	25.1	
-20	22.5	.01mW
-21	20.0	
-22	17.9	
-23	15.9	
-24	14.1	
-25	12.8	
-26	11.5	
-27	10.0	
-28	8.9	
-29	8.0	
-30	7.1	.001mW
-31	6.25	
-32	5.8	
-33	5.0	
-34	4.5	
-35	4.0	
-36	3.5	
-37	3.2	
-38	2.85	
-39	2.5	
-40	2.25	.1µW
-41	2.0	
-42	1.8	
-43	1.6	
-44	1.4	
-45	1.25	
-46	1.18	
-47	1.00	
-48	0.90	

dBm	mV	Po
-49	0.80	
-50	0.71	.01µW
-51	0.64	
-52	0.57	
-53	0.50	
-54	0.45	
-55	0.40	
-56	0.351	
-57	0.32	
-58	0.286	
-59	0.251	
-60	0.225	.001µW
-61	0.200	
-62	0.180	
-63	0.160	
-64	0.141	

dBm	µV	Po
-65	128	
-66	115	
-67	100	
-68	90	
-69	80	
-70	71	.1nW
-71	65	
-72	58	
-73	50	
-74	45	
-75	40	
-76	35	
-77	32	
-78	29	
-79	25	
-80	22.5	.01nW
-81	20.0	
-82	18.0	
-83	16.0	
-84	11.1	
-85	12.9	
-86	11.5	
-87	10.0	
-88	9.0	
-89	8.0	
-90	7.1	.001nW
-91	6.1	
-92	5.75	
-93	5.0	
-94	4.5	
-95	4.0	
-96	3.51	
-97	3.2	

dBm	µV	Po
-98	2.9	
-99	2.51	
-100	2.25	.1pW
-101	2.0	
-102	1.8	
-103	1.6	
-104	1.41	
-105	1.27	
-106	1.18	

dBm	nV	Po
-107	1000	
-108	900	
-109	800	
-110	710	.01pW
-111	640	
-112	580	
-113	500	
-114	450	
-115	400	
-116	355	
-117	325	
-118	285	
-119	251	
-120	225	.001pW
-121	200	
-122	180	
-123	160	
-124	141	
-125	128	
-126	117	
-127	100	
-128	90	
-129	80	.1ƒW
-130	71	
-131	61	
-132	58	
-133	50	
-134	45	
-135	40	
-136	35	
-137	33	
-138	29	
-139	25	
-140	23	.01ƒW

INDEX

A

ACCESS DENIED error message 20
Accessories 5
Accessory Power pinout (Pin 18) 14
Active messaging (defined) 5
Alarms
alarm code definitions 32
major vs. minor 31
pinout (Pin 25) 15
using STAT command to display 29
AMASK command 22
Antenna
installation 9
RSSI command used to refine heading 15
system gain, defined 6
Yagi, illustrated 12
Antennas 11–12
Applications 2
Multiple Address Systems (MAS) 2
point-to-multipoint system 2
point-to-point system 3
ASENSE command 23

B

BAUD command 23
Baud rate
setting for RJ-11 DIAG port (DLINK command) 25, 35
Bench testing (radio performance), 36–37
Bit, defined 6
Bits-per-second. See BPS
BPS (bits-per-second), defined 6
BUFF command 23
Byte, defined 6

C

Cable, loss due to length of coaxial 12
Cautions
use attenuation between all units in test setup 35
CKEY command 24
COMMAND FAILED error message 20
Command summary, table 20
Commands
AMASK (set/display alarm triggers) 22
ASENSE (set alarm output state) 23
BAUD (set/display rate, encoding) 23
BUFF (set/display data handling mode) 23
CKEY (enable/disable continuous keying) 24
CTS (set/display CTS line response timer) 24
DATAKEY (enable/disable transmitter keying by radio) 24
DEVICE (set/display radio behavior) 24
DKEY (deactivate transmitter after KEY command) 25
DLINK (enable/disable network-wide diagnostics) 25
DMGAP (set time to wait between characters) 25
DTYPE (set radio to Root or Node for diagnostics) 25
DUMP (display all programmed settings) 26
entering on Hand-Held Terminal (HHT) 19
Hand-Held Terminal (HHT) 19
HREV (display hardware revision level) 26
INIT (reinitialize radio to factory defaults) 26
INIT xx10 (restore standard transceiver defaults) 26
INIT xx20 (configure radio for use with P-20 chassis) 26
KEY (activate transmitter) 27
MODEL (display radio model number code) 27
MODEM (set modem speed) 27
OWM (set/display owner's message) 27
OWN (set/display owner's name) 27
PTT (set/display key-up delay) 27
PWR (set/display RF forward output power) 27
RSSI (display RSSI) 28
RTU (enable/disable internal RTU) 28
RX (set/display receive frequency) 28
RXTOT (set/display receive time-out timer value) 28
SCD (set/display soft-carrier dekey delay) 28
SER (display radio serial number 28
SHOW (display DC voltage, data port, RF power) 29
SNR (display signal-to-noise ratio) 29
SREV (display software revision level) 29
STAT (display current alarm status) 29
TEMP (display internal temperature) 29
TOT (set/display time-out value and timer status) 30
TX (set/display transmit frequency) 30
Conversions, dBm-Watts-Volts 40
CTS command 24
CTS pinout (Pin 5) 14

D

Data interface
connector pinouts 14
display active connector port 29
installing connection 13
DATAKEY command 24
dB. See Decibel 6
dBi, defined 6
dBm, defined 6
DCD
LED 16
pinout (Pin 8) 14
DCE (Data Cirtuit-terminating Equipment), defined 6
Decibel (dB), defined 6

Description, product 1
Detailed 22
DEVICE command 24
Diagnostic Channel Enable, pinout (Pin 23) 15
Diagnostics
interface specifications 34
network-wide, performing 34
PC software used for 38
using InSite software for network-wide 34
Differences between models 2
Display
alarm status (STAT command) 29
alarm triggers (AMASK command) 22
all programmed settings (DUMP command) 26
baud rate and encoding (BAUD command) 23
connector port, active (SHOW command) 29
CTS line response timer (CTS command) 24
data handling mode (BUFF command) 23
DC voltage (SHOW command) 29
hardware revision leve (HREV command)l 26
key-up delay (PTT command) 27
model number code (MODEL command) 27
owner's message (OWM command) 27
owner's name (OWN command) 27
radio behavior (DEVICE command) 24
radio serial number (SER command) 28
receive frequency (RX command) 28
receive time-out timer value (RXTOT command) 28
RF forward output power (PWR command) 27
RF output (SHOW command) 29
RSSI (RSSI command) 28
signal-to-noise ratio (SNR command) 29
soft-carrier dekey delay (SCD command) 28
software revision level (SREV command) 29
temperature, internal (TEMP command) 29
time-out value and timer status (TOT command) 30
transmit frequency (TX command) 30
DKEY command 25
DLINK command 25
use of 35
DMGAP command 25
Downloading new software 38
DSP (Digital Signal Processing), defined 6
DSR pinout (Pin 6) 14
DTE (Data Terminal Equipment), defined 6
DTYPE command 25
use of 35
DUMP command 26

E

EEPROM FAILURE error message 20
Enable/disable
continuous keying (CKEY command) 24
diagnostic channel, pinout (Pin 23) 15
internal RTU (RTU command) 28
network-wide diagnostics (DLINK command) 25
network-wide diagnostics, procedures 35
Environment specifications 34
Equalization, defined 6
Error messages 19
access denied 20
command failed 20
EEPROM failure 20
incorrect entry 19
not available 20
not programmed 20
text too long 20
unknown command 19

F

Fade margin, defined 7
Feedlines 12
Filter, helical, adjustment 37
Frame, defined 7
Frequency
adjusting helical filter when changed 37
setting. See TX and RX commands

G

Glossary 5
Ground
on Pin 12 to enable Sleep mode 14
protective (Pin 1) 14
signal (Pin 7) 14

H

Half-duplex 3
switched carrier operation 4
Hand-Held Terminal (HHT) 5
connected to transceiver, illustrated 18
connection and startup 17
display in response to STAT command, illustrated 31
entering commands 19
error messages displayed on 19
keyboard commands 19
operational settings, table 19
reinitialization display, illustrated 18
reinitializing 18
Hardware flow control, defined 7
Helical filter
adjusting 37
illustration 38
Host computer, defined 7
HREV command 26

I

Illustrations
antenna, Yagi 12
Hand-Held Terminal (HHT) connected to transceiver 18
Hand-Held Terminal (HHT) reinitialization display 18
Hand-Held Terminal display in response to STAT command 31
helical filter locations 38

MAS network 3
MDS 2710A/D model number codes 4
network-wide diagnostics 35
point-to-point link 3
remote station arrangement 9
RJ-11 to DB-9 adapter cable 36
RSSI vs. Vdc 13, 16
transceiver connectors & indicators 1
transceiver mounting dimensions 11
INCORRECT ENTRY error message 19
INIT command 26
INIT xx10 command 26
INIT xx20 command 26
InSite software
using to perform remote diagnostics 34
Installation 8–15
antenna 9
configuring transceiver 10
DATA INTERFACE connection 9
data interface connections 13
power 9
power connection 12
steps 9
Intrusive diagnostics (defined) 7

K

KEY command 27
Keying
continuously keyed versus switched carrier operation 4
continuously keyed, defined 4
on data (DKEY command) 25
switched carrier, defined 4

L

Latency, defined 7
LEDs
DCD 16
indicators, described 16
PWR 16
RXD 16
RXD, Pin 3 14
status indicators, illustrated 16
TXD 16
TXD, Pin 2 14
Loss. See Signal

M

MAS (Multiple Address System) 2
defined 7
illustration 3
Master Station
defined 7
keying behavior 4
MCU (Microcontroller Unit), defined 7
MODEL command 27
Model number codes
displaying (MODEL command) 27
MDS 2710A/D, illustrated 4
MODEM command 27
Modem, set speed. See MODEM command

N

Network-wide diagnostics
active messaging, defined 5
defined 7
enable/disable (DLINK command) 25
enable/disable internal RTU (RTU command) 28
illustrated 35
intrusive diagnostics, defined 7
passive messaging (defined) 7
procedures 34
set radio to Root or Node (DTYPE command) 25
set time to wait between characters (DMGAP command) 25
NOT AVAILABLE error message 20
NOT PROGRAMMED error message 20

O

Operation 15–16
environment, specifications for 34
Output, 9.9 Vdc regulated, pinout (Pin 19) 15
OWM command 27
OWN command 27
Owner's message, set/display. See OWM command
Owner's name, set/display. See OWN command

P

Passive messaging (defined) 7
Payload data (defined) 8
Performance
testing, 36–37
Pinouts on data interface 14
PLC (Programmable Logic Controller), defined 8
Point-to-multipoint
defined 8
system 2
Point-to-point
link, illustrated 3
system 3
Poll, defined 8
Power
connection 12
display DC voltage (SHOW command) 29
display RF output (SHOW command) 29
installing 9
LED status indicator (PWR LED) 16
RF, chart for converting dBm-Watts-Volts 40
specifications 34
Power attenuators, use of in testing 37
Procedures
checking for alarms (STAT command) 31
connecting Hand-Held Terminal (HHT) 17
downloading new software 38

entering commands using the Hand-Held Terminal (HHT) 19
helical filter adjustment 37
installation 9
measuring RSSI with DC voltmeter 16
network-wide diagnostics 34
operation 15, 16
performance optimization 15
reading LED status indicators 16
resetting Hand-Held Terminal (HHT) 18
troubleshooting 30–32
Product
accessories 5
description 1
display model number code (MODEL command) 27
display radio serial number (SER command) 28
Programming radio as root or node 35
Programming, transceiver 17–20
PTT
command 27
pinout (Pins 14, 16) 14
PWR
command 27
LED 16

R

Radio
Configuration Software 5, 38
Inhibit pinout (Pin 12) 14
serial number, displaying (SER command) 28
Receive Audio Output pinout (Pin 11) 14
Receiver
specifications 34
system specifications 33
unsquelched signal (Pin 10) 14
Redundant operation, defined 8
Remote
RTU reset (Pin 15) 14
Station, defined 8
Station, illustrated 9
Resetting
Hand-Held Terminal (HHT) (SHIFT,CTRL,SPACE keys) 18
remote RTU reset (Pin 15) 14
transceiver (INIT command) 26
Revision level
display hardware (HREV command) 26
display software (SREV command) 29
RSSI
adjusting helical filter for increased signal strength 37
command 28
command, used to refine antenna heading 15
measuring 16
pinout (Pin 21) 15
vs. Vdc, illustrated 13, 16
RTS pinout (Pin 4) 14
RTU
command 28
RTU (Remote Terminal Unit)
defined 8
remote reset (Pin 15) 14
RTU simulator, 36
RUS pinout (Pin10) 14
RX command 28
RXD LED
description 16
Pin 3 14
RXTOT command 28

S

SCADA (Supervisory Control And Data Acquisition), defined 8
SCD command 28
SER command 28
Set
alarm output state (ASENSE command) 23
alarm triggers (AMASK command) 22
receive time-out timer value (RXTOT command) 28
SHOW command 29
Signal
ground (Pin 7) 14
loss due to coaxial cable length, table 12
Simplex 3
single-frequency operation 4
special case of switched carrier operation 4
Sleep mode
example implementation 13
ground on Radio Inhibit pin activates 14
Pin 12 14
shown by PWR LED status indicator 16
SNR command 29
Software
diagnostics and control used from PC 38
display revision level 29
upgrades (.S28 files) 38
upgrading 38
used for diagnostics and programming 17
Specifications
diagnostics interface 34
environment 34
power 34
receiver 34
receiver system 33
transceiver 33–34
transmitter 33
transmitter system 33
SREV command 29
STAT command 29
SWR (Standing Wave Radio), defined 8

T

Tables
accessories 5
alarm code definitions 32
command summary 20
conversions, dBm-Watts-Volts 40
data interface connector pinouts 14
Hand-Held Terminal (HHT) operational settings 19
LED status indicators 16

length vs. loss in coaxial cables 12
Technical reference 33–40
Technical reference,
bench test setup, 36–37
TEMP command 29
Temperature, displaying internal (TEMP command) 29
Testing. See bench testing
TEXT TOO LONG error message 20
Timer, set/display time-out value and status (TOT command) 30
TOT command 30
Transceiver
applications 2
configuring for operation 10
connectors and indicators, illustrated 1
diagnostics using PC software 38
dimensions, mounting 11
mounting 9, 11
programming 17–20
specifications 33–34
upgrading software 38
Transmit Audio Input pinout (Pin 9) 14
Transmitter
specifications 33
system specifications 33
Troubleshooting 30–32
connecting Hand-Held Terminal (HHT) for displaying alarm codes 17
performing network-wide diagnostics 34
STAT command (Status) 31
using PC software for 38
TX command 30
TXD LED
description 16
Pin 2 14

U

UNKNOWN COMMAND error message 19

NOTES

IN CASE OF DIFFICULTY...

MDS products are designed for long life and trouble-free operation. However, this equipment, as with all electronic equipment may have an occasional component failure. The following information will assist you in the event that servicing becomes necessary.

FACTORY TECHNICAL ASSISTANCE

Technical assistance for MDS products is available from our Customer Support Team during business hours (8:00 A.M.–5:30 P.M. Eastern Time). When calling, please give the complete model number of the radio, along with a description of the trouble symptom(s) that you are experiencing. In many cases, problems can be resolved over the telephone, without the need for returning the unit to the factory.

Please use one of the following means for product assistance:

Phone: 585-241-5510

E-mail: techsupport@microwavedata.com

Web: www.microwavedata.com

FAX: 585-242-8369

FACTORY REPAIRS

Component-level repair of radio equipment is *not* recommended in the field. Many components are installed using surface mount technology, which requires specialized training and equipment for proper servicing. For this reason, the equipment should be returned to the factory for any PC board repairs. The factory is best equipped to diagnose, repair and align your radio to its proper operating specifications.

If return of the equipment is necessary, you will be issued a Service Return Order (SRO) number. The SRO number will help expedite the repair so that the equipment can be repaired and returned to you as quickly as possible. Please be sure to include the SRO number on the outside of the shipping box, and on any correspondence relating to the repair. *No equipment will be accepted for repair without an SRO number.*

A statement should accompany the radio describing, in detail, the trouble symptom(s), and a description of any associated equipment normally connected to the radio. It is also important to include the name and telephone number of a person in your organization who can be contacted if additional information is required.

The radio must be properly packed for return to the factory. The original shipping container and packaging materials should be used whenever possible. All factory returns should be addressed to:

Microwave Data Systems Inc.
Product Service Department
(SRO No. XXXX)
175 Science Parkway
Rochester, NY 14620 USA

When repairs have been completed, the equipment will be returned to you by the same shipping method used to send it to the factory. Please specify if you wish to make different shipping arrangements.

industrial/wireless/performance

MDS

industrial/wireless/performance

Microwave Data Systems Inc.
175 Science Parkway
Rochester, NY 14620
General Business: +1 585 242-9600
FAX: +1 585 242-9620
Web: www.microwavedata.com

A product of Microwave Data Systems Inc.