Reference Manual

1. Abbreviations and Acronyms

Abbreviation / Acronym	Definition
	{ = Two definitions, same abbreviation/acronym
ACLR	Adjacent Channel Leakage Power Ratio
ACP	Adjacent Channel Power
A/D	Analog-to-Digital Conversion
ADC	{Analog-to-Digital Converter {Automatic Data Collection
AM	Amplitude Modulation
AMPS	Advanced Mobile Phone System
ANSI	American National Standards Institute
APC	Automatic Power Control
APTT	Analog Push To Talk
ASG	Applications Support Group
ASIC	Application Specific Integrated Circuit
ATE	Automatic (Automated) Test Equipment
ATP	Acceptance Test Procedure
ATTEN	Attenuator
BER	Beyond Economical Repair
BOM	Bill Of Materials
BPF	Band Pass Filter
BS	Base Station
BTS	Base Transceiver Station (System)
BW	BandWidth
°C	Degrees Celsius
CAD	Computer Aided Design
CCA	{Circuit Card Assembly
CCW	Counter ClockWise
CDMA	Code Division Multiple Access
CDPD	Cellular Digital Packet Data
CTRL	Control
CW	{ClockWise {Continuous Wave
dB	deciBels
dBc	Referenced to a carrier level
dBm	Reference to a specific power level (one milliwatt)
dBw	Reference to a specific power level (one watt)
DIN	Deutsches Insitut für Normung eV
DLNA	Duplexer Low Noise Amplifier
DPTT	Digital Push To Talk
DQPSK	Differential Quadrature Phase Shift Keyed
DSP	Digital Signal Processing
DUT	Device Under Test
ECD	Estimated Completion Date
ECM	Electronic Counter Measure
EDGE	Enhanced Data for GSM Evolution
EEPROM	Electrically-Erasable Programmable Read-Only Memory
EIA	Electronic Industries Association
EMC	ElectroMagnetic Compatibility
EMI	ElectroMagnetic Interference
EPROM	{Electrically Programmable Read-Only Memory {Erasable Programmable Read-Only Memory

ESD ..... ElectroStatic Discharge
ESG ..... Electronic Signal Generator
ETDMA ..... Extended Time Division Multiple Access
ETSI ..... European Telecommunications Standard Institute
EUT ..... Equipment Under Test

FAR ..... Failure Analysis Report
FCC ..... Federal Communications Commission
FDMA ..... Frequency Division Multiple Access
FET ..... Field Effect Transistor
FHMA ..... Frequency Hopping Multiple Access
FM ..... Frequency Modulation
FRU ..... Field Replaceable Unit
FSK ..... Frequency Shift Key modulation

GHz ..... GigaHertz
GMSK ..... Gaussian Minimum Shift Keying
GOLAY ..... See GSC
GSC ..... Golay Sequential Code
GSM ..... Global System for Mobile Communications

HPF ..... High Pass Filter
HW ..... Hardware
Hz ..... Hertz

IAW ..... In Accordance With
IC ..... Integrated Circuit
IMD ..... InterModulation Distortion
IRL ..... Input Return Loss
IS-54 ..... Interim Standard 54 for TDMA
IS-95 ..... Interim Standard 95 for CDMA
ISDN ..... Integrated Services Digital Network
ISM ..... Industrial, Scientific and Medical unlicensed frequency bands
ISO ..... {International Organization for Standardization
{ISOlator

kHz ..... KiloHertz

LDA ..... Linear Discrete Amplifier (Class A or AB)
LGL ..... Lower Guardband Limit
LMR ..... Land Mobile Radio
LMS ..... Land Mobile Systems
LNA ..... Low Noise Amplifier
LO ..... Local Oscillator
LPA ..... Linear Power Amplifier
LPF ..... Low Pass Filter
LSL ..... Lower Specification Limit
LVD ..... Low Voltage Disconnect

MC ..... MultiChannel
MCA ..... MultiChannel Amplifier
MCPA ..... {MultiCarrier Power Amplifier
{MultiChannel Power Amplifier
MCR ..... MultiChannel Rack
MFRM ..... {Multiple Frequency Radio Mobile
{Multifunction Frequency Radio Modulation
MHz ..... MegaHertz
MSO ..... Master Switch Office
MTBF ..... Mean Time Between Failures
MTSO ..... Master Telephone Switch Office
MU ..... Measurement Uncertainty

M&TE ..... Measuring and Test Equipment

NAMPS ..... Narrow Analog Mobile Phone System
NIOSH..... National Institute for Occupational Safety and Health
NIST ..... National Institute for Standards and Technology
NMT ..... Nordic Mobile Telephone
NVM ..... NonVolatile Memory

OEM ..... Original Equipment Manufacturer
OFDM..... Orthogonal Frequency Division Multiplexing
OMS ..... Operational Method Sheet
OOB ..... Out Of Box
O/P ..... Output
OPAF ..... Outdoor Power Amplifier Frame
OSHA ..... Occupational Safety and Health Administration

PA ..... Power Amplifier
PAF ..... Powerwave Amplifier Frame
PAR..... Peak to Average Ration
PCB..... Printed Circuit Board
PCMCIA ..... Personal Computer Memory Card International Association
PCN..... Personal Communications Network
PCS..... {Personal Communications Services
{Personal Communication System(s)
PDA..... Personal Digital Assistant
PEP ..... Peak Envelope Power
PF..... PicoFarads
PHS..... Personal Handyphone System – Japan
PLC ..... Product Life Cycle
PLL..... Phase Locked Loop
PM..... {Phase Modulation
{Preventive Maintenance
PMR ..... Peak to Minimum Ratio
PO ..... Purchase Order
PPM ..... Parts Per Million
PSC..... {PCS Single Channel
..... {Product Serialization Code
PSTN..... Public Switched Telephone Network
PTI..... Powerwave Technologies, Inc.
PTT ..... Push To Talk
PWAV..... PowerWAVe

QA ..... Quality Assurance
QAM ..... Quadrature Amplitude Modulation

RBW..... Resolution BandWidth
RF ..... Radio Frequency
RFI ..... Radio Frequency Interference
RFQ..... Request For Quotation
RFS ..... RF Solutions
RFSU ..... RF Switching Unit
RGO ..... Return Goods Order
RH ..... Relative Humidity
RL..... Return Loss
RMA ..... {Rack-Mounted Amplifier
{Return Material Authorization
RMP ..... Reliability Monitoring Plan (Procedure)
RMS ..... Root Mean Square
RSS..... Root Sum Square
Rx..... Receive, Receiver

SCHPA ..... Single-Channel High Power Amplifier
SCPA ..... Single Channel Power Amplifier
SIM ..... System Interface Module
SMA ..... SubMiniature Type A (coaxial connector)
SMT ..... Surface Mount Technology
SN ..... Serial Number
SO ..... System Outage
SOE ..... Sequence of Events
SW ..... SoftWare

TBC ..... To Be Confirmed
TBD ..... To Be Determined (To Be Defined)
TCXO ..... Temperature Controlled crystal Oscillator
TD ..... {Temperature Drift
..... {Temporary Deviation
TDMA ..... Time Division Multiple Access
TRU ..... Transmit Receive Unit
TRX ..... Transceiver (Transmit / Receiver) Unit
Tx ..... Transmit, Transmitter

UAI ..... Use As Is
UART ..... Universal Asynchronous Receiver Transmitter
UCL ..... Upper Control Limit
UCLR ..... Upper Control Limit for Range
UGL ..... Upper Guardband Limit
UL ..... Underwriters Laboratories
UMTS ..... Universal Mobile Telecommunications System
UNL ..... Unit Nominal Level
URG ..... Unit Reference Gain
USL ..... Upper Specification Limit
UUT ..... Unit Under Test

VADJ ..... Voltage ADJust (signal name frequently found on schematic or block diagrams)
VBW ..... Video BandWidth
VCO ..... Voltage Controlled Oscillator
VFWD ..... Voltage ForWarD (signal name frequently found on schematic or block diagrams)
VREFL ..... Voltage REFLected (signal name frequently found on schematic or block diagrams)
VSWR ..... Voltage Standing Wave Ratio
VVA ..... Voltage Variable Attenuator

WCDMA ..... Wideband Code Division Multiple Access

XMT ..... Transmit
XMTR ..... Transmitter

2. Revision History

Release Date	Revision Level	Comments
Jan 23, 2004	Rev. A	Initial Draft
May 14, 2004	Rev. A.01	Revised layout (no formatting) Separated sections to independent manuals Significant updates to all text and graphics
	Rev. B	Correct battery part number in section 4.0 Updated cabinet figures in section 4.0 Minor update to SIM interface in AC Power Wiring Diagrams in section 4.1 Inserted all new documentation for sections 4.7.2 to end of document

3. Introduction

3.1 Symbols - Warnings, Cautions, and Notes

Warnings, Cautions, and Notes are found throughout this manual where applicable. The associated icons are used to quickly identify a potential condition that could result in the consequences described below if precautions are not taken. Notes clarify and provide additional information to assist the user.

Warning This warning symbol means danger. You are in a situation that could cause bodily injury. Before you work on any equipment, be aware of the hazards involved with electrical and RF circuitry and be familiar with standard practices for preventing accidents.

Caution This caution symbol means *reader be careful*. In this situation, the user might do something that could result in equipment damage or loss of data.

Note This note symbol means *reader take note*. Notes contain helpful suggestions or references to material not covered in the document. Procedures are not contained in notes.

3.2 Equipment Changes

Powerwave Technologies, Inc. reserves the right to make changes to the subject equipment, including but not necessarily limited to component substitution and circuits. Changes that impact this manual may subsequently be incorporated in later revisions.

3.3 System Components and Documents

The table lists the model numbers and descriptions of the major components that comprise the OPAF system and the document number of the manual related to each component.

Major System Components

Model	Manual	Description	Quantity per system
OPAF-1923-P07C01	044-05156	Reference Manual	1
	044-05162	Maintenance & Troubleshooting Manual	
	044-05163	Site Preparation & Installation Manual	
	044-05164	Field Replaceable Units Manual	
G3S-1900-125	044-05122	MCPA	6
MCR21929-1-2	044-05121	Subrack	3
800-08824-001		System Interface Module	1
800-09088-001		Fan Interface Module	1
930-00018-005 *		148-Amp Rectifier	3
920-00360-002 *		Low Voltage Disconnect	1
920-00337-003		Back-Up Battery	4
TPL-CZ **		Fuse, 600A, 170 VDC or less	2

* Manufactured by Cherokee International
** Manufactured by Bussmann® Telpower®, Cooper Bussmann, Inc. St. Louis, MO

4. System Functional Description

The OPAF-1923-P07C01 is an AC powered, linear, feed-forward multicarrier power amplifier system that operates in the 60 MHz frequency band from 1930 MHz to 1990 MHz with an instantaneous bandwidth of 25 MHz. It consists of:

- One outdoor enclosure assembly.
- Up to six model G3S-1900-125 amplifiers (two per sector, each mounted in an MCR21929-1-2 two-way subrack).
- Six Duplexer Low Noise Amplifier modules
- Four 930-00018-005, 148-amp rectifiers.
- One Low Voltage Disconnect system.
- Four 12 Vdc 105 AH Batteries .
- System Interface Module

Designed for outdoor use, the IP54 rated enclosure is a sturdy aluminum cabinet with front and rear locking ventilating doors. Access to the RF, and alarm cabling is located at the lower sides and rear of the enclosure. Access to the AC power cabling is located at the left side AC panel of the enclosure

The enclosure protects the Powerwave equipment from the outdoor elements as well as housing the System Interface Module (SIM) and the electrical interface for the 148-amp rectifiers and G3S-1900-125 MCPAs (Multicarrier Power Amplifiers).

The all solid-state G3S-1900-125 plug-in amplifier module MCPAs, , are designed to produce high-peak power output. The modular construction and unique and highly effective Light Emitting Diode (LED)-based operation and fault indicators always display the current operating status of the amplifiers. The turn-on and turn-off sequence of voltages are fully automatic, as is overload protection and recycling. A nominal 52-Amps of current is required for the G3S-1900-125 amplifier at rated output power.

Each of the three MCR21929-1-2 subracks, contain up to two MCPAs. The MCPA outputs are combined to provide one composite output per subrack. Each subrack is equipped with an Automatic Power Control (APC) circuit and an RF GAIN ADJUST potentiometer. The APC indicator and GAIN ADJUST potentiometer are located on the upper-right front of the subrack. Each subrack provides two RS-485 alarm interface ports, a preamp alarm interface port, a Form-C alarm interface port and an RS-232 maintenance port, as well as, RF IN, RF OUT and a –50dB RF sample port.

The 148-amp rectifiers and associated subracks require primary input power between 176 to 264 Vac. The rectifier converts the AC input power to the +27 VDC for use by the system. The system design provides 12 minutes of battery backup time with P/N 920-00337-003 batteries under a full operational load (3 hrs 30 mins. under a light load). A Low Voltage Disconnect (LVD) monitors the output voltage of the battery system and disconnects the batteries from the circuit

when the battery voltage drops below 21 VDC. The LVD also provides the trickle charge path for the batteries during recovery and normal operation.

The System Interface Module (SIM) monitors the performance and alarm state of the rectifiers, amplifier subracks, and Duplexer Low Noise Amplifier (DLNA) modules.

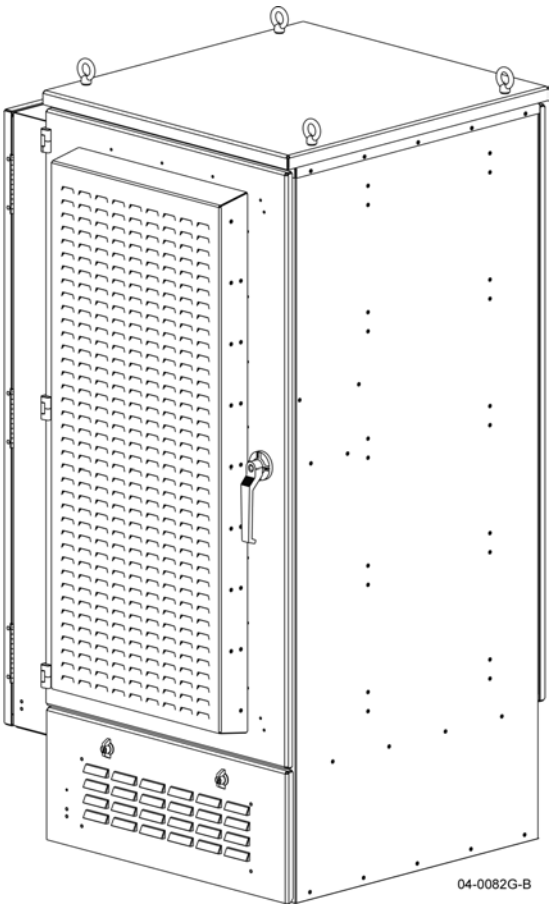

OPAF Front Isometric View and Rear Isometric View

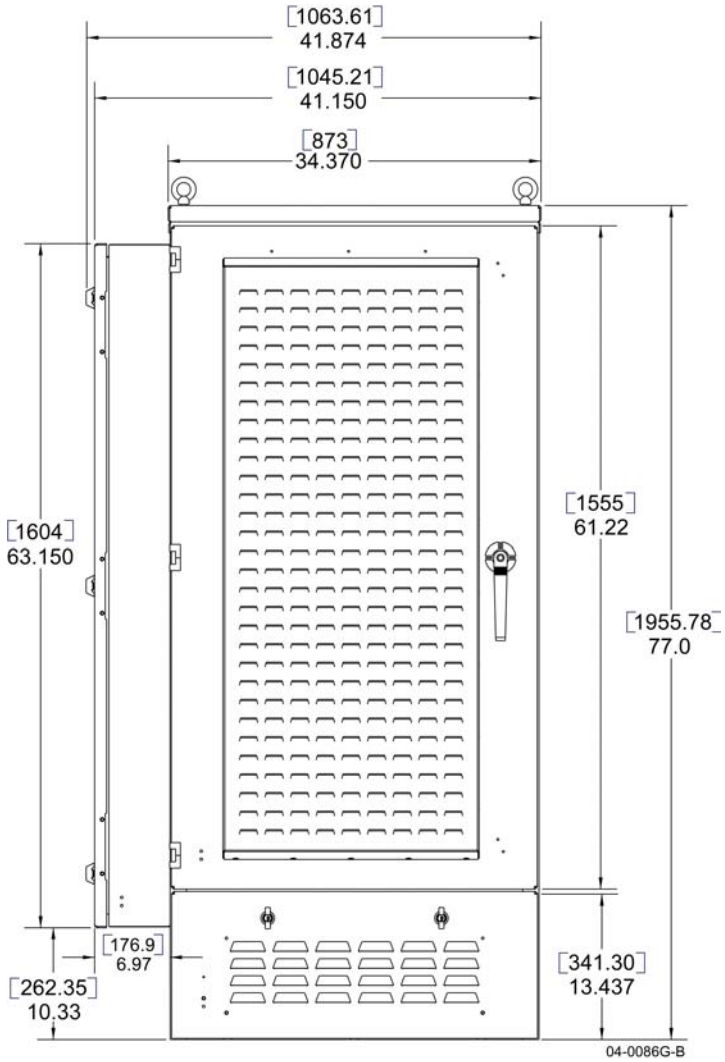

OPAF Front View with Dimensions

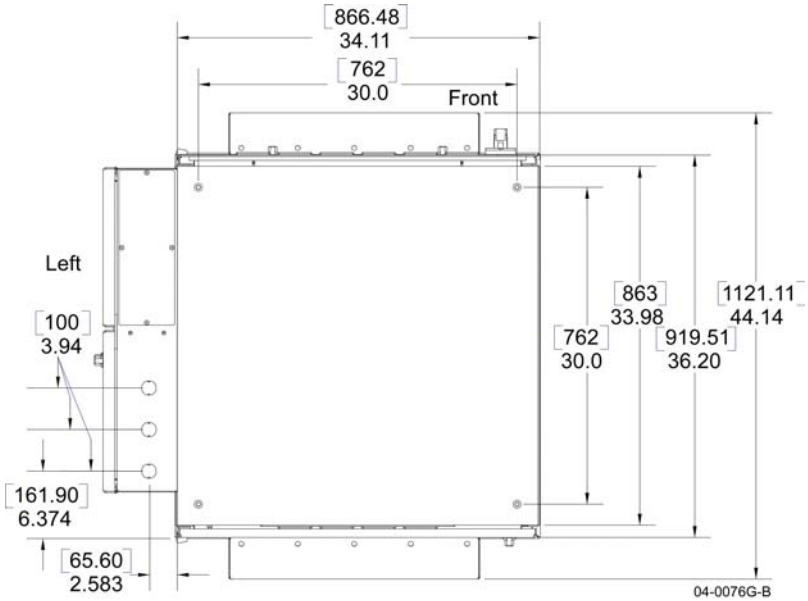

OPAF Bottom View with Dimensions

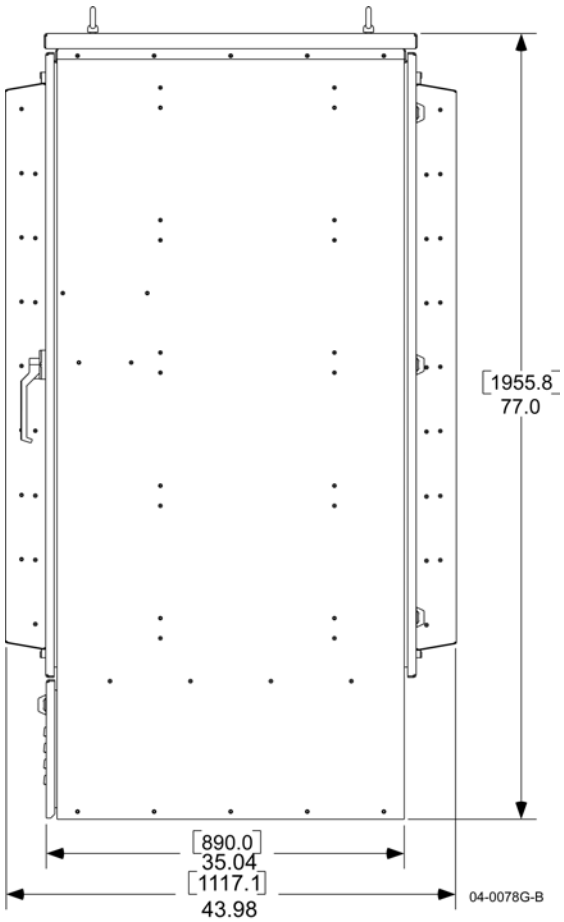

OPAF Left Side View and Right Side with Dimensions

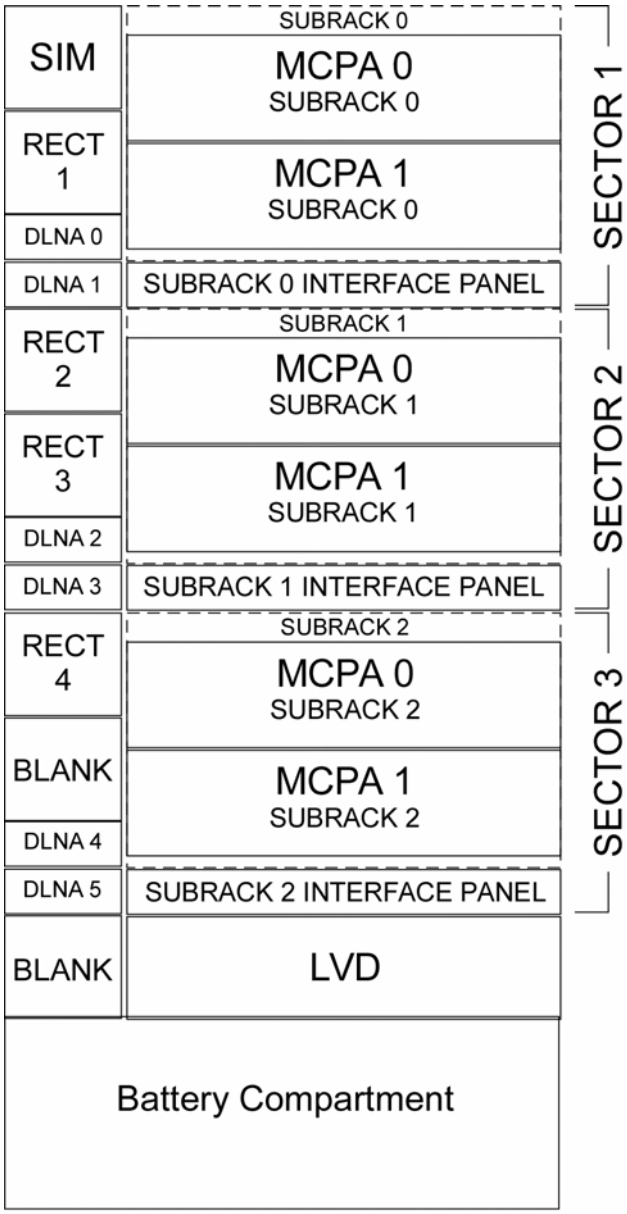

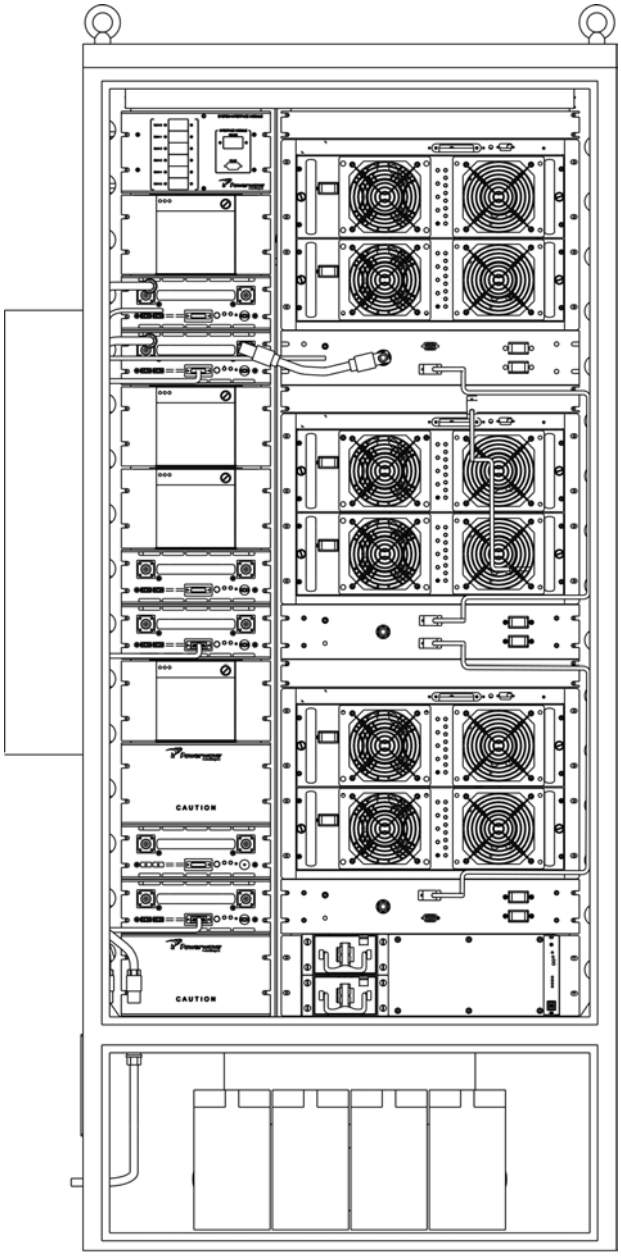

OPAF Front View with Door Removed

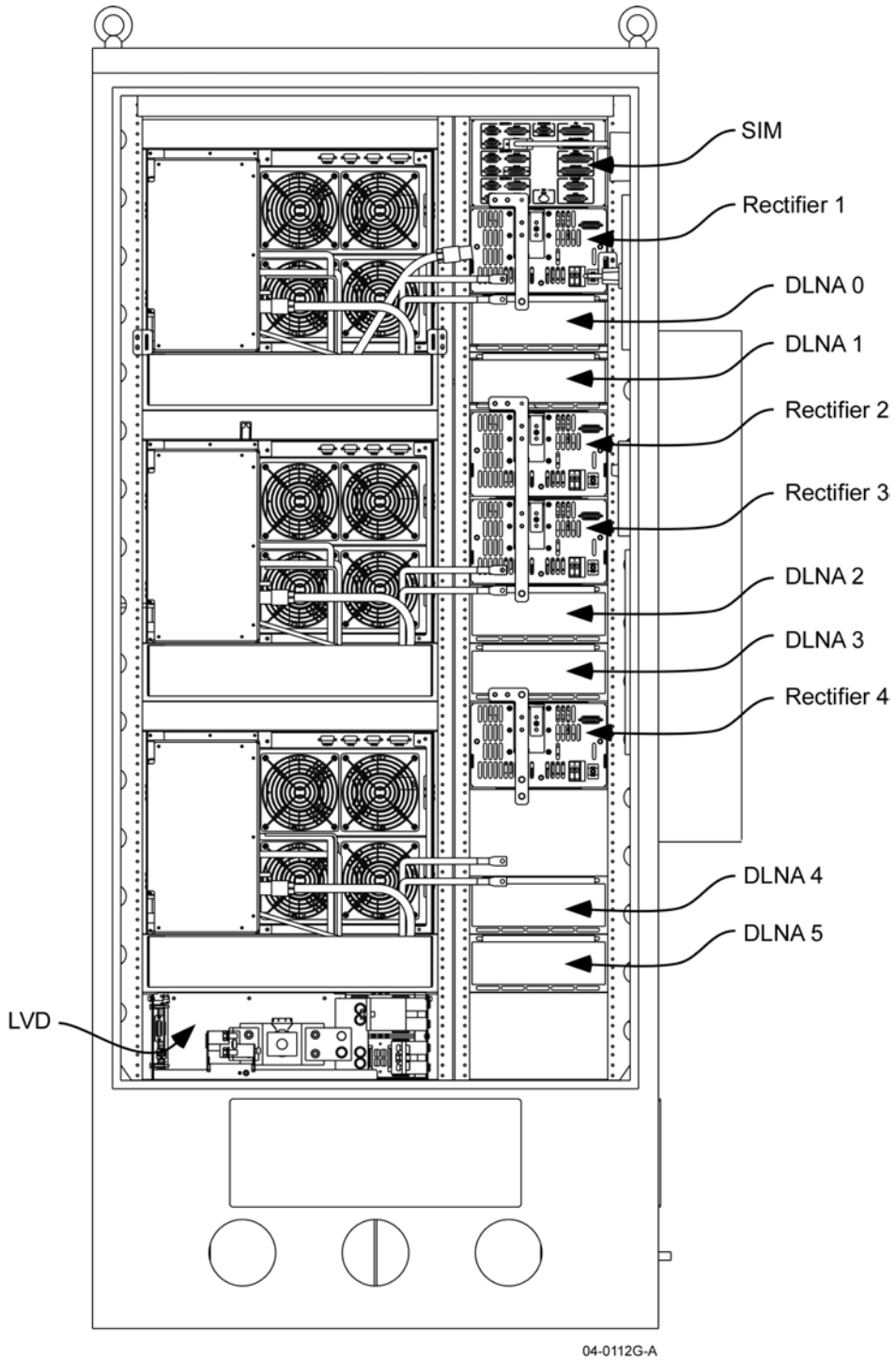

OPAF Rear View with Door Removed

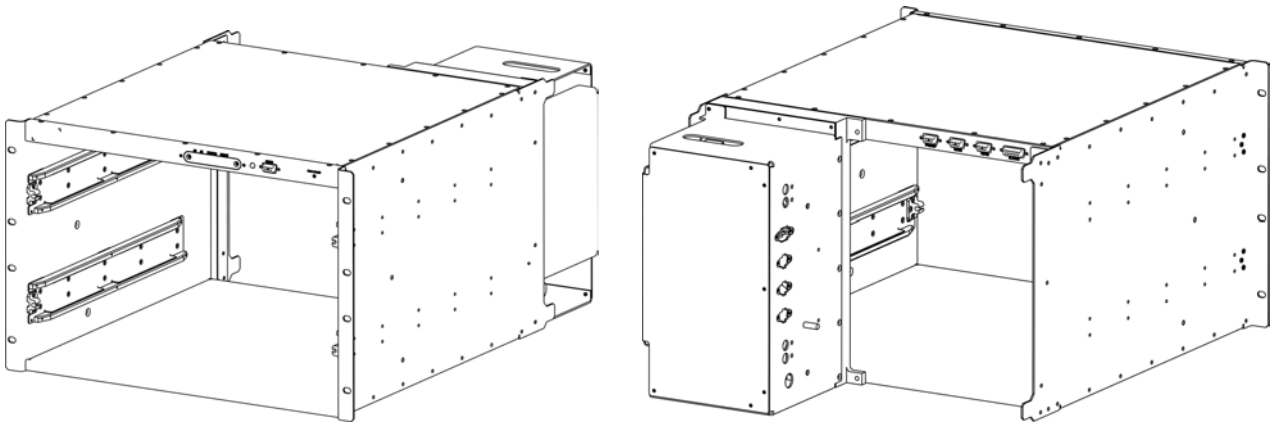

MCR21929-1-2 Subrack Front and Rear Isometric View

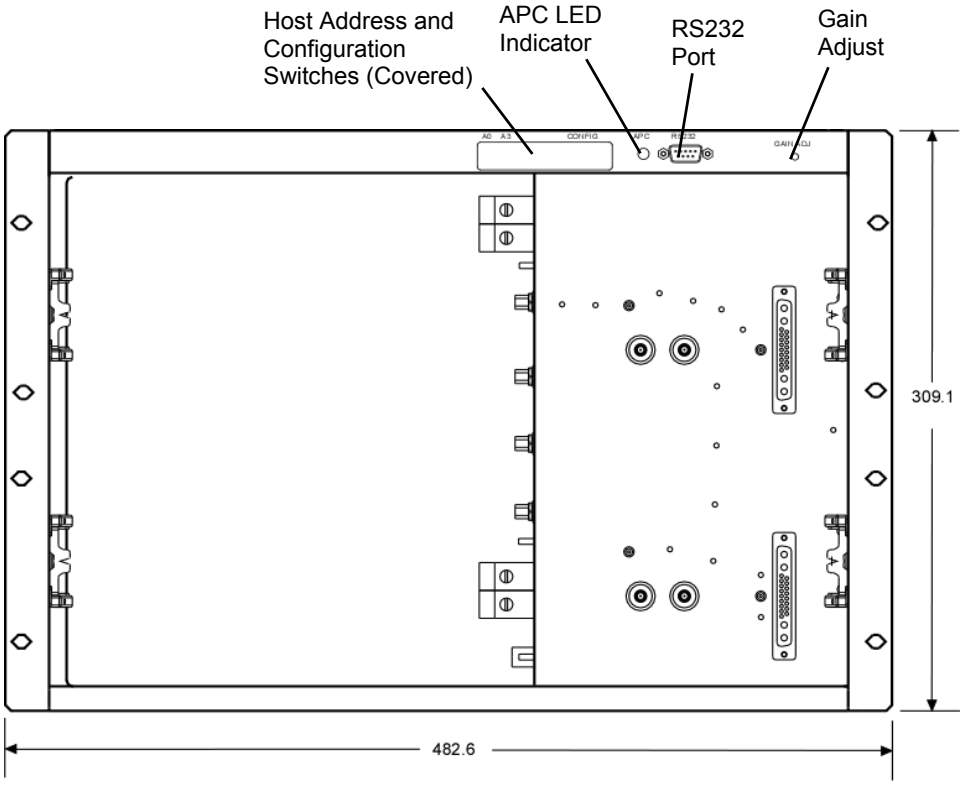

MCR21929-1-2 Front View without Amplifiers

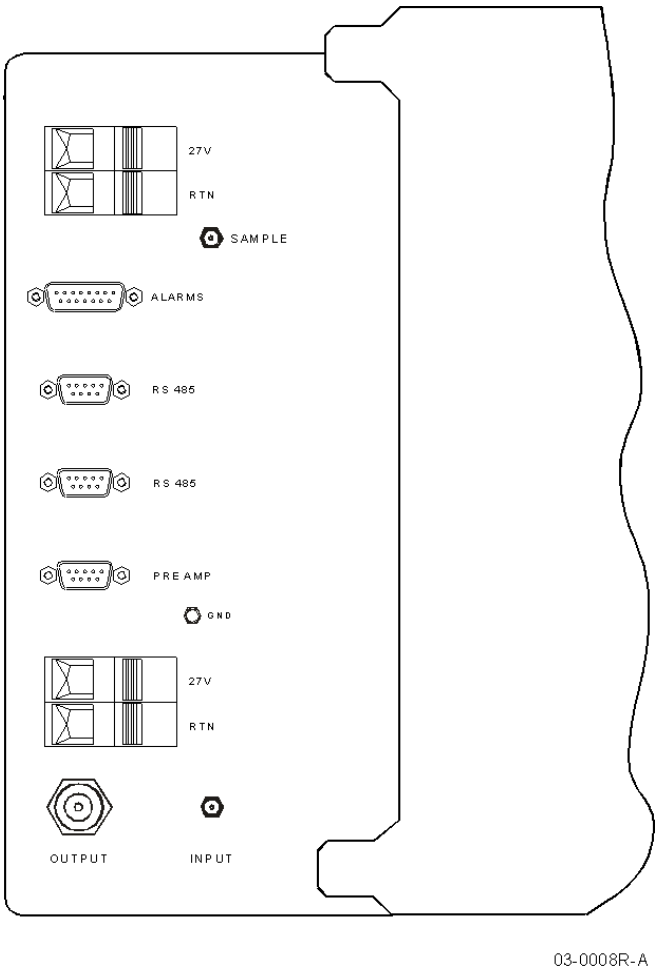

MCR21929-1-2 Subrack Interface Connectors

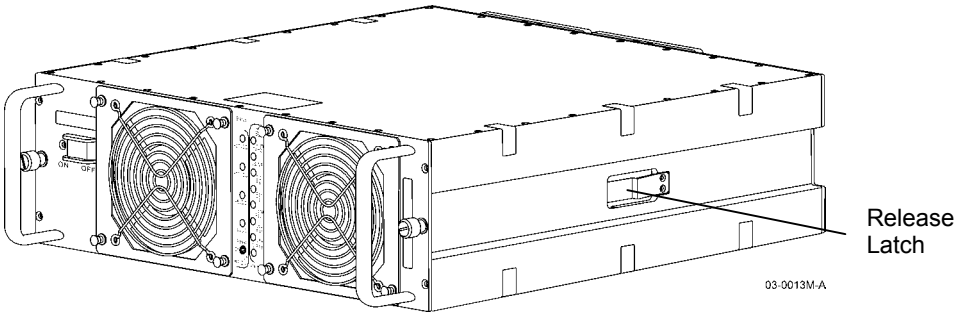

G3S-1900-125 Multi-Carrier Power Amplifier Isometric View

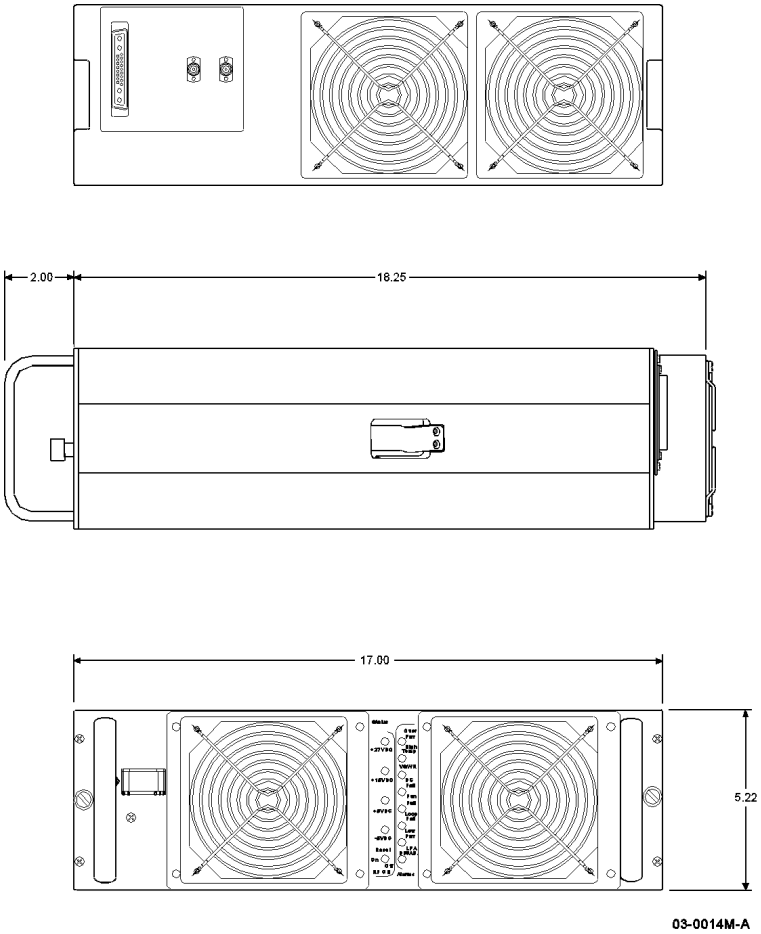

G3S-1900-125 Multi-Carrier Power Amplifier- Front, Side and Rear Views

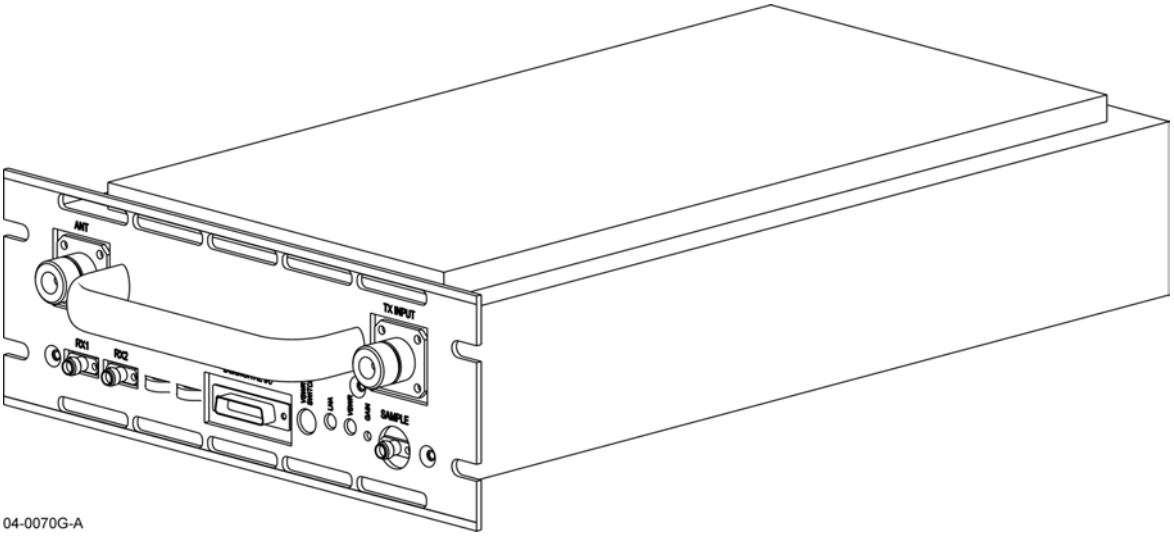

DLNA Dimetric View

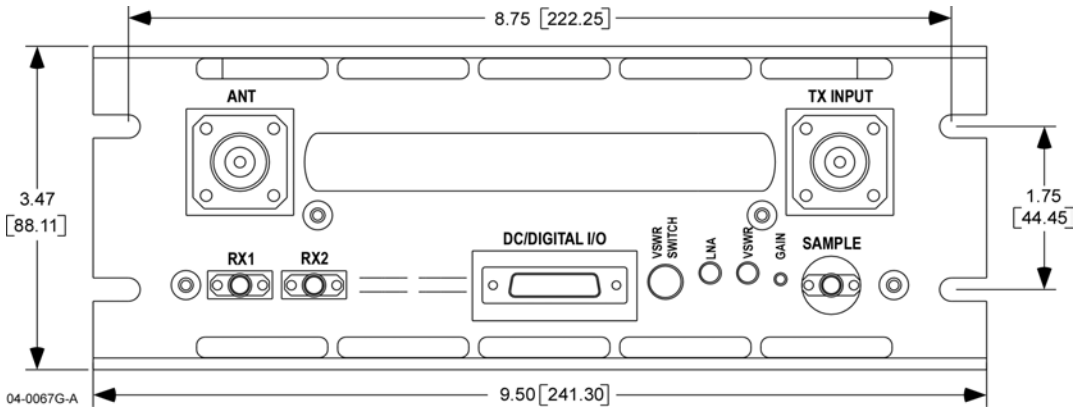

DLNA Front Panel

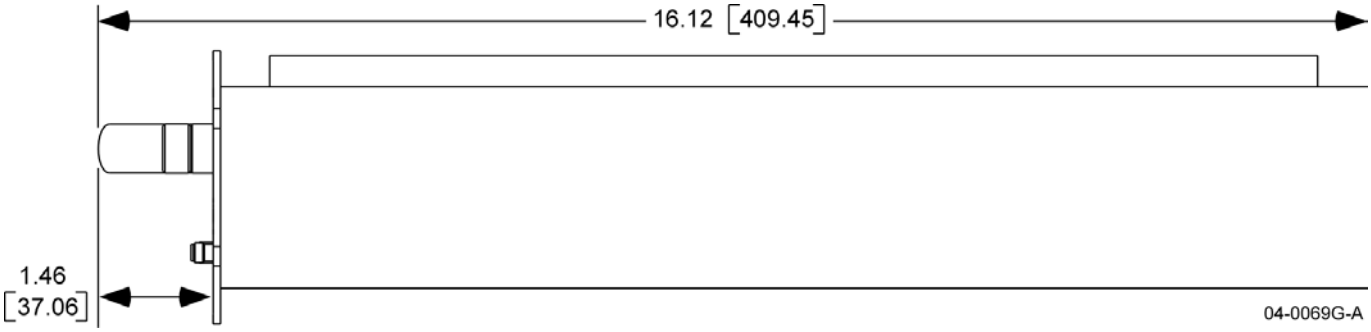

DLNA Side View Panel

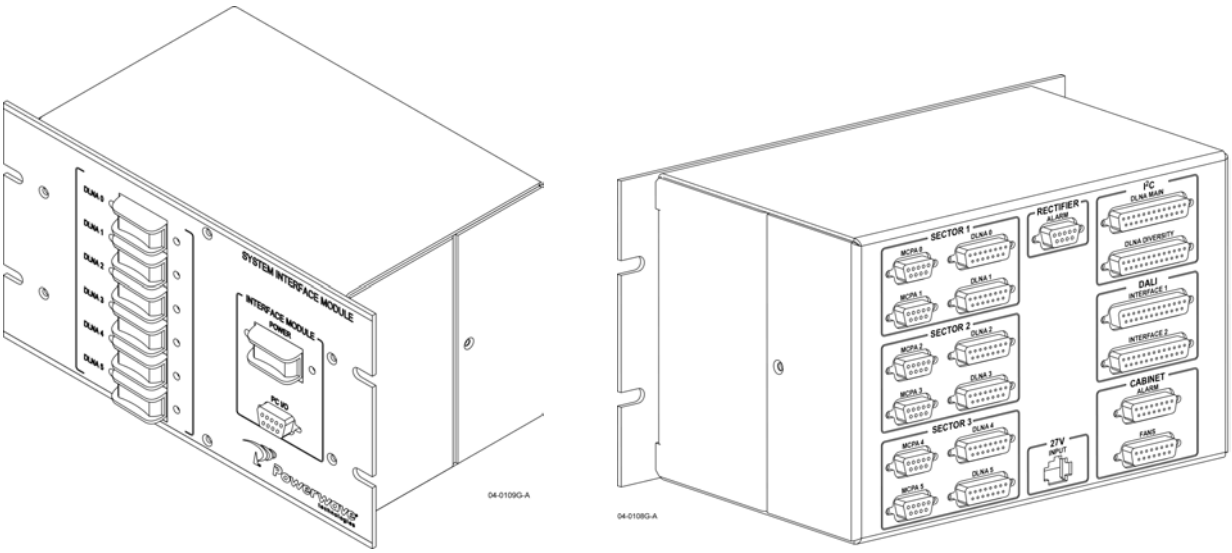

System Interface Module

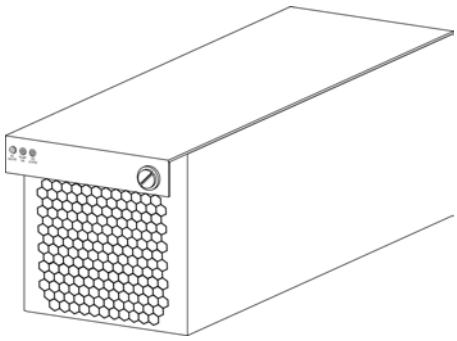

Front

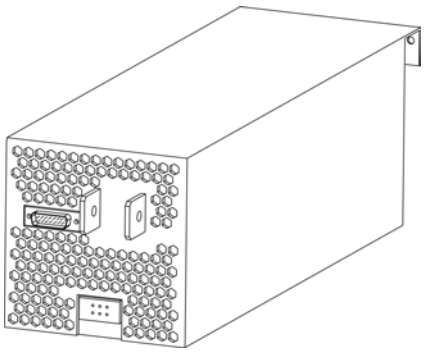

Rear

148-Amp Rectifier Isometric Views

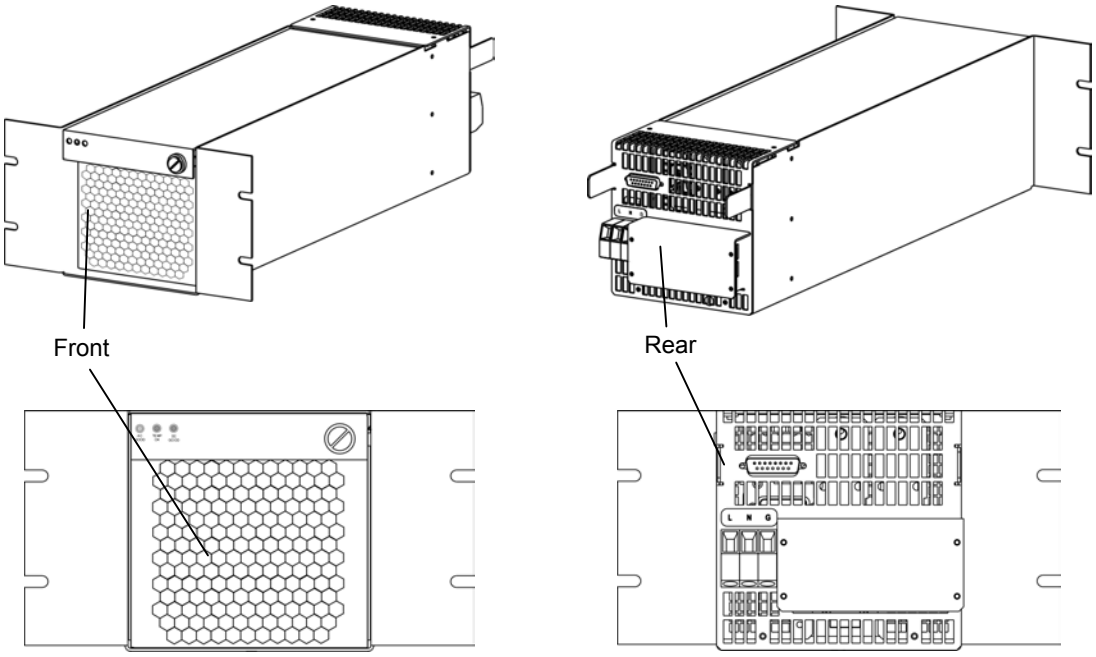

148-Amp Rectifier Tray and Panel Views

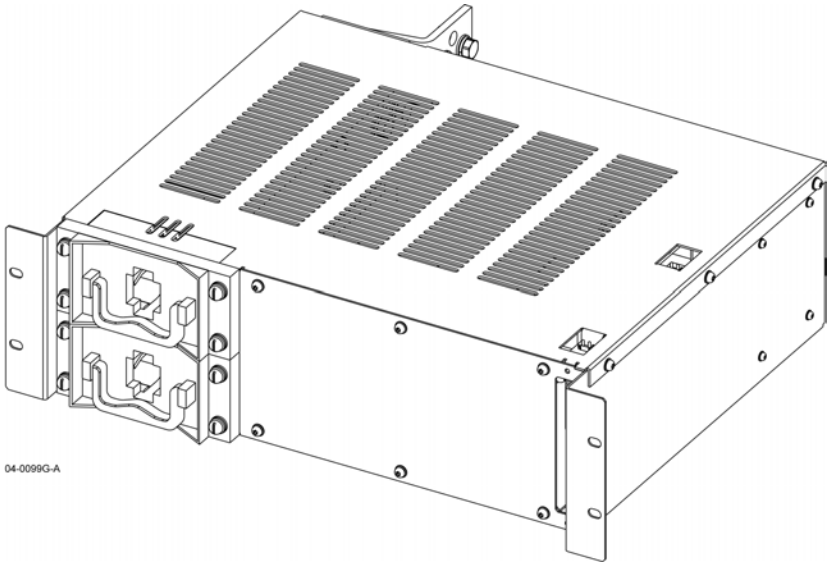

Low Voltage Disconnect (LVD) Module

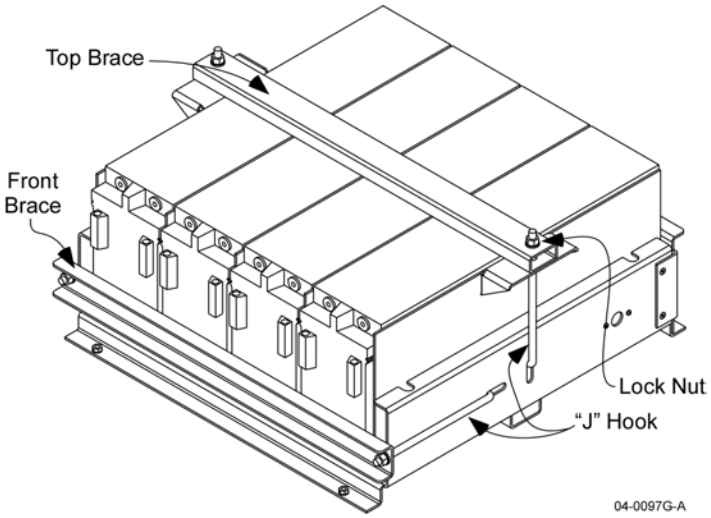

P/N 920-00337-003 Back-Up Battery

4.1 Cabinet Overview

This section contains a functional description of the Powerwave OPAF Outdoor Multi-Carrier Power Amplifier (MCPA) System. Refer to the system block diagrams below.

A complete OPAF system consists of a combined three-sector configuration that includes six G3S-1900-125 MCPA, 125-Watt amplifiers and three 4 KW (148-Amp), six Duplexer LNA (DLNA) assemblies, a System Interface Module (SIM), four 220 VAC AC to +27 VDC rectifiers, a Low Voltage Disconnect (LVD) assembly, four backup batteries and one outdoor enclosure.

The cabinet is equipped with four lifting bosses on the top panel. The lifting bosses are designed to carry six-times the weight of the cabinet and its full contents, providing the weight is evenly distributed between the four lifting bosses.

The cabinet provides easy cable and conduit access, to eliminate the need for external cable protective materials. This eases the installation and maintenance of the cabinet. The cabinet is designed for ease of maintenance with most modules and cables accessible either from the front of the cabinet, or side panel maintenance ports.

The cabinet provides 3 110 VAC GFCI courtesy outlets. 2 are incorporated in the front and rear light fixtures at the top of the cabinet, the third is located inside the AC panel. 10 amps of service is available for these three outlets.

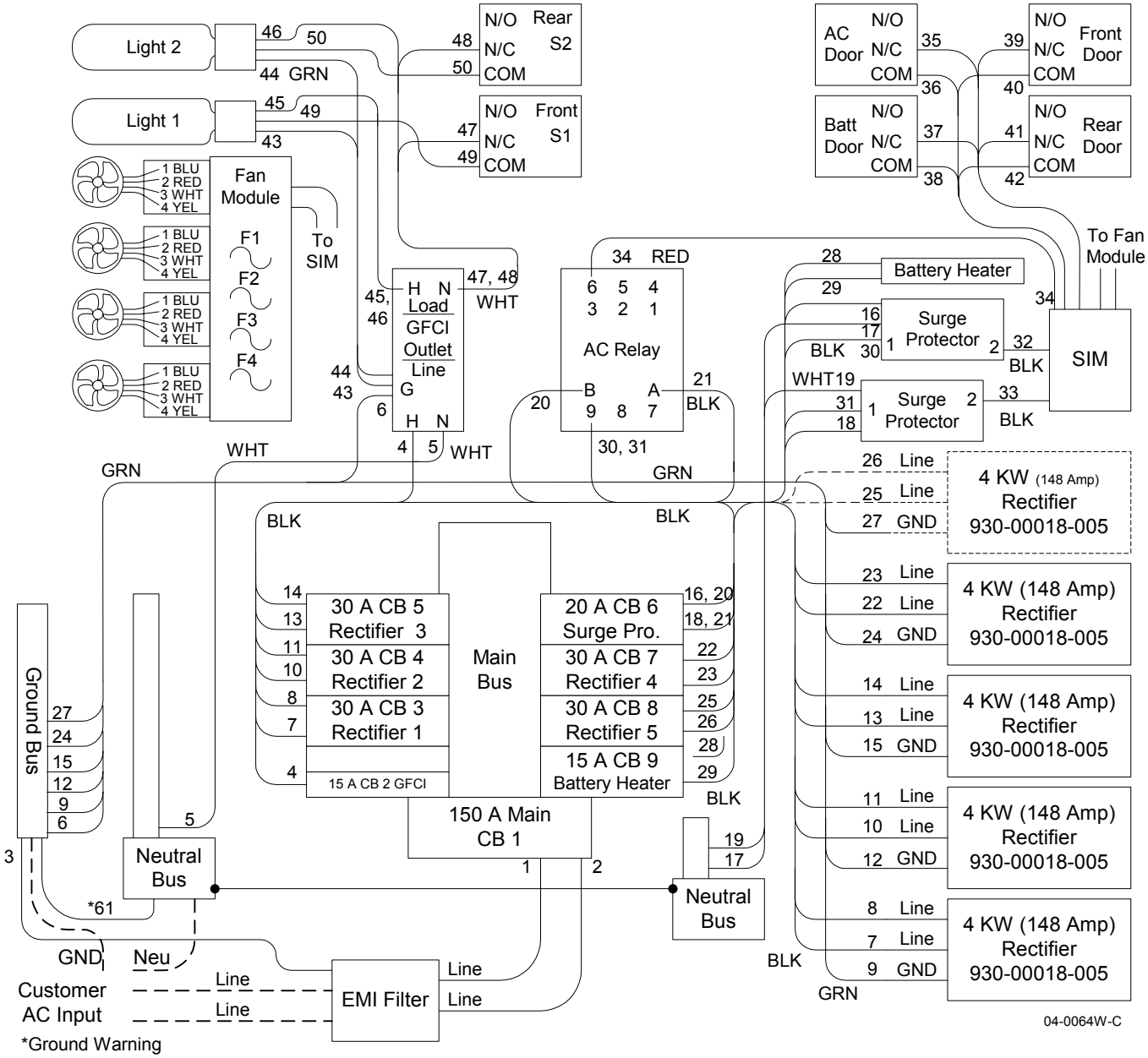

*Ground Warning
When connecting to the main service transformer, connect main ground and wire #61 to the Neutral bus.
When connecting to another AC panel, this becomes a sub-panel. Connect main ground to the Ground Bus and disconnect wire #61 at the Neutral bus. Insulate the bare wires on #61 wire. Failure to disconnect wire #61 may cause a ground loop and a safety hazard, resulting in injury or equipment damage.

4.2 AC Power Distribution

Simplexed transmit RF input is provided by the BTS to the OPAF input bulkhead. The transmit signals are combined (in the 16x16 configuration), amplified, then duplexed with the receive signals. The duplexed signals are presented to a bulkhead connector for interface with the antenna port. The duplexer provides coupled samples of the forward and reflected signals for BTS diagnostics.

Received signals from the duplexed antenna are separated from the transmit signals in the DLNA. The receive signals are amplified by 45 dB through a low noise amplifier. The output signal is split into two paths, to allow for future system expansion. Each sector has two DLNAs, one for the primary receive path and one for the diversity receive path. The diversity DLNA only has transmit signals when the sector is expanded beyond eight carriers.

The SIM assembly monitors the MCPAs, LNAs, LVD, and rectifiers, and reports alarms via the I^2C and DALI interface.

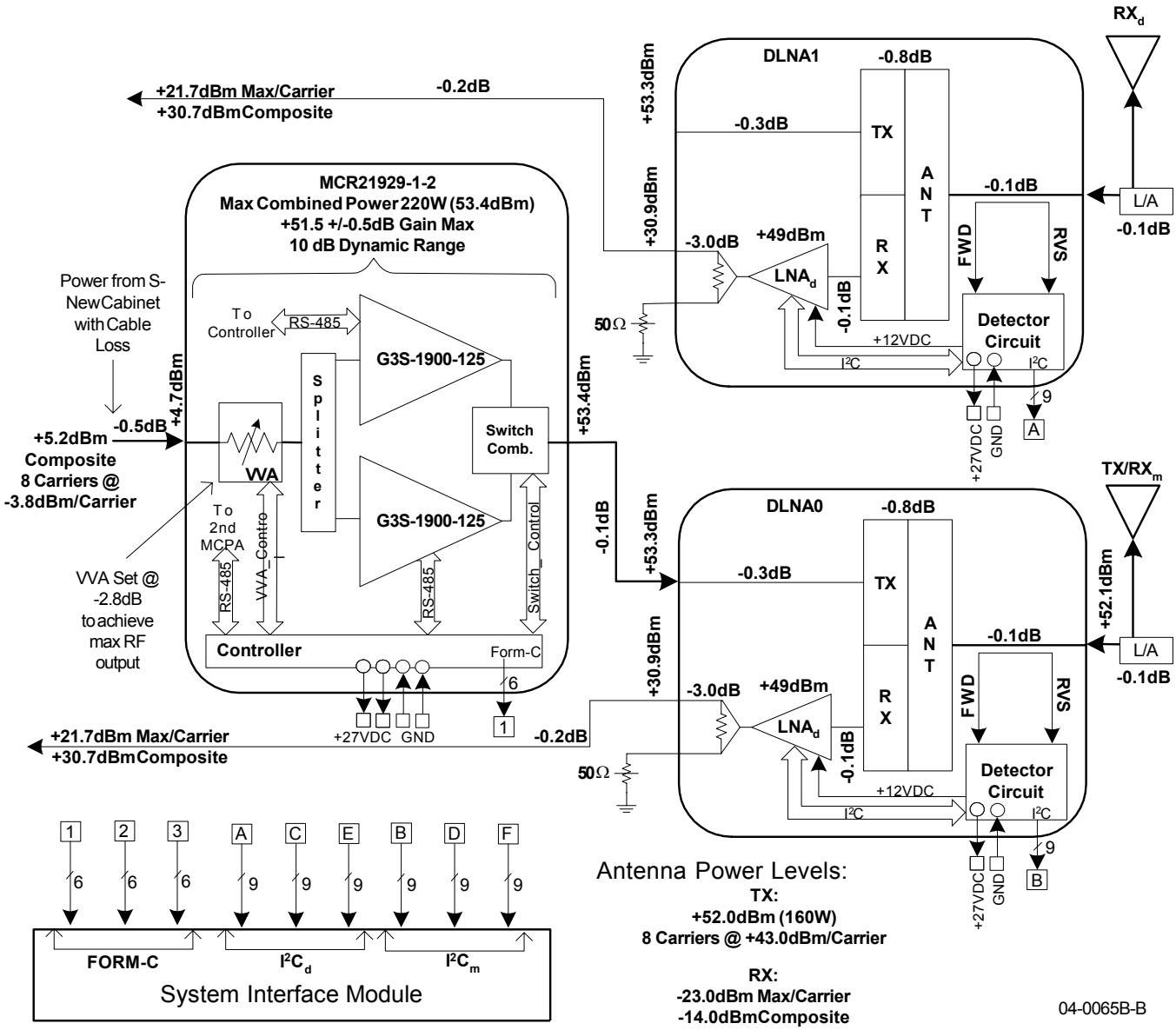

OPAF-1923-P07C01 RF Configuration, Single Sector Example

4.3 RF Input Signal

Any number of RF input signals can be applied to the transmit RF input port, providing: the signals meet established mask requirements for any 2G or 3G wireless modulation scheme, the input signals do not cause the amplifier to be over driven, and the gain of the system meets the appropriate base station architechural requirements. The maximum input power for all carrier frequencies should not exceed the limits idicated in the system specification. The input VSWR should be 2:1 maximum (or better).

4.4 RF Output Load

The load impedance should be as good as possible (1.5:1 or better) in the working band for good power transfer to the load. The amplifier is operated into a duplexer and will maintain its distortion characteristics outside the signal band even if the VSWR is infinite, provided the reflected power does not exceed one watt. A parasitic signal of less than one-watt incident on the output will not cause distortion at a higher level than the normal forward distortion (i.e. -63 dBc).

4.5 G3S-1900-125 Amplifier Module

4.5.1 Overview

The G3S-1900-125 amplifier is a linear, feed-forward power amplifier that operates in the 60 MHz frequency band from 1930 MHz to 1990 MHz. It is designed to operate in two continuous frequency blocks in the PCS band or an instantaneous bandwidth of 20 MHz. A typical one-sector system is illustrated above. Each amplifier is a self-contained plug-in module and is functionally independent of the other amplifier module. The amplifier modules are designed for parallel operation to achieve high peak power output, and for redundancy in unmanned remote locations. Each amplifier in the system can simultaneously transmit multiple carrier frequencies at 85 watts per sector, for a combined output power of 170 watts.

Each amplifier output is an amplified composite signal of approximately 125 watts before losses. All phase and gain corrections are performed on the signal(s) in the individual amplifier modules. Each amplifier module has alarm and display LEDs that display the amplifier performance. If a failure or fault occurs in an amplifier module, it is displayed on the individual amplifier front panel.

The amplifier typically draws 52 amps of current at rated output power, and approximately 25 amps with no RF signals applied. Be sure to turn the amplifier off before removing it from the subrack to avoid damaging the equipment or causing personal injury.

4.5.1.1 Controls, Indicators, & Interfaces

Primary +27 Vdc power is applied to the amplifier via a 100-amp circuit breaker (ON-OFF) located on the left side of the amplifier front panel.

The plug-in amplifier module RF control and indicators, located in the center of the amplifier front panel between the cooling fans, are shown below. The status and RF control functions are described in detail in the *Amplifier Module DC Indicators RF Switch Definition* table. The alarms are described in detail in the *Amplifier Module RF Control and Indicators Definition* table.

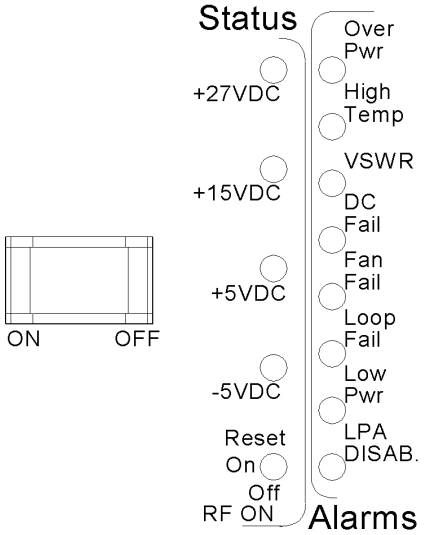

G3S-1900-125 Amplifier Module RF Control and Indicators

Amplifier Module DC Indicators RF Switch Definition

Name	Function
+27VDC Indicator	Green LED. When lit, indicates that the +27 Vdc supply is greater than +21 Vdc and less than +31 Vdc. If the +27 Vdc indicator goes out, the DC Fail indicator will illuminate. This indicates that the +27 Vdc voltage dropped below +21 Vdc.
+15VDC Indicator	Green LED. When lit, indicates that the +15 Vdc supply is greater than +12 Vdc and less than +17 Vdc. If the +15 Vdc indicator goes out, the DC Fail indicator will illuminate. This indicates that the +15 Vdc voltage dropped below +12 Vdc or increased above +17 Vdc.
+5VDC Indicator	Green LED. When lit, indicates that the +5 Vdc supply is greater than +2 Vdc and less than +7 Vdc. If the +5 Vdc indicator goes out, the DC Fail indicator will illuminate. This indicates that the +5 Vdc voltage dropped below +2 Vdc or increased above +7 Vdc.
-5VDC Indicator	Green LED. When lit, indicates that the -5 Vdc supply is greater than -7 Vdc and less than -2 Vdc. If the -5 Vdc indicator goes out, the DC Fail indicator will illuminate. This indicates that the -5 Vdc voltage dropped below -7 Vdc or increased above -2 Vdc.
RF ON Switch	Three position switch: **Off** (down position) - Turns off amplifier module. **On** (center position) - Normal amplifier on position. **Reset** (up position) - When toggled to reset position, all the red LED indicators will turn on one at a time in sequence followed by all the green indicators one at a time in sequence; this will also reset the fault latches. If the switch is held in the reset position, a microcontroller reset will occur. This will be verified by the LEDs toggling state again. The switch is spring loaded to return to the normal ON position when released. If a fault occurs and the MCPA is disabled, the alarms can be cleared and the MCPA enabled by this reset position. The functions of the switch are disabled for five seconds after a power-up condition.

Amplifier Module RF Control and Indicators Definition

Amplifier Alarm	Latching	**LED**	**MCPA Module**	**System Alarm (From Subrack)**	**MCPA Disable signal (pin 4)**	**Condition**	**Auto-Recovery**
Over PWR Fault	Yes	Red	Disable	Major	High	MCPA Module P_{out} > 52 dBm (Note 1)	None
Over PWR Fault	No	Red	Disable	Major	High	P_{in} > -6 dBm software; -5 dBm hardware	<-12 dBm Software
High Temperature	No	Red	Enable	None	Low	Base plate temperature ≥ 80 C	<75°C
High Temperature	No	Red	Disable	Major	High	Base plate temperature ≥ 85 C	<75°C
VSWR	No	Red	Enable	None	Low	Reflected and Forward Powers both exceed 40W. Condition exist for less than 1 minute	Reflected or Forward Power < 38W
VSWR	Yes	Red	Disable	Major	High	Alarm set after alarm state on for more than 1 minute	None
DC Fail	No	Red	Disable	Major	High	Average Internal voltage out of range.	(Note 2)
DC Fail (Over Voltage)	No	Red	Disable	Major	High	+27V DC input > 30.5 V	30.0V
DC Fail (Under Voltage)	No	Red	Disable	Major	High	+27VCD input < 21 V	21.5V
Fan Fail	No	Red	Enable	Minor	Low	Any fan fail (<70 Hz Speed)	(>100 Hz Speed)
Loop Fail	Yes	Red	Disable	Major	High	Loop fail detected longer than 2 min	None
Low PWR	N/A	Red	Enable	None	Low	Indication shown base on rack RS 485 command.	NA

MCPA Module Alarm Definition:

Note 1: When Over Power detected at the output:

a) MCPA Module will shut down (Disable).

b) Turn on red Over Power lamp.

c) Latch Over Power alarm

d) The MCPA Module will use a RMS detector to determine the over power fault.

Note 2: The Appropriate Status lamp will turn off, indicating which voltage is out of its range.
(10% range for +15V, +5V, and -5V).

The amplifier module has an average output of 125 watts power (1250 watts peak power) with intermodulation products suppressed to better than -63 dBc below carrier levels. The amplifier provides an amplified output signal with constant gain and phase by adding approximately 25 dB of distortion cancellation on the output signal. Constant gain and phase is maintained by continuously comparing active paths with passive references, and correcting for small variations through the RF feedback controls. All gain and phase variations, for example those due to temperature, are reduced to the passive reference variations. The amplifier module is comprised of:

Preamplifiers	Two feed-forward loops with phase-shift and gain controls
Main amplifier	DC/DC power regulator
Error amplifier	Alarm monitoring, control, and display panel

4.5.1.2 Main Amplifier

The main amplifier employs class AB amplification for maximum efficiency. The error amplifier and feed forward loops are employed to correct signal nonlinearities introduced by the class AB main amplifier. The error amplifier operates in class AB mode. The RF input signals are amplified by a preamp and coupled to an attenuator and phase shifter in the first feed-forward loop. The main signal is phase shifted by 180 degrees and amplified in the premain amplifier. The output from the premain amplifier is fed to the class AB main amplifier. The output from the main amplifier is typically 180 watts. The signal is output to several couplers and a delay line.

The signal output from the main amplifier is sampled using a coupler, and the sample signal is combined with the main input signal and input to the second feed-forward loop. The error signal is attenuated, phase shifted 180 degrees, then fed to the error amplifier where it is amplified to a level identical to the sampled output from the main amplifier. The output from the error amplifier is then coupled back and added to the output from the main amplifier. The control loops continuously make adjustments to cancel out any distortion in the final output signals.

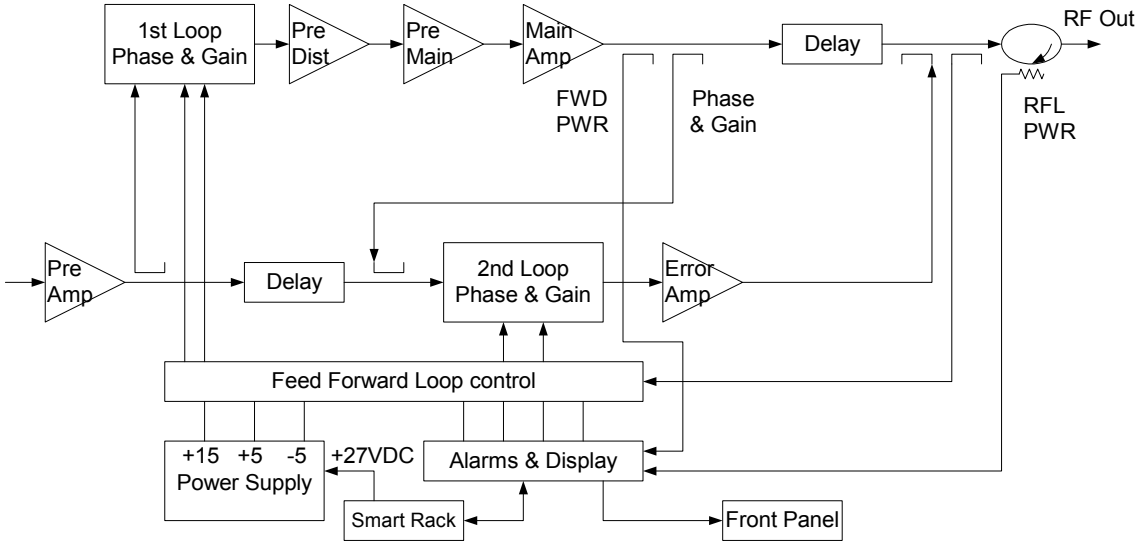

G3S-1900-125 Power Amplifier Module Functional Block Diagram

The 2nd loop control section obtains a sample of the distortion added to the output signals by the main amplifiers, phase shifts the signals by 180 degrees, then feeds it to the error amplifier. There it is amplified to the same power level as the input sample and coupled on to the main output signal. The final output is monitored by the 2nd loop and adjusted to ensure that the signal distortion and IMD on the final output is canceled out.

The input and output of the amplifier employ two-stage, class AB amplifiers, which provide approximately 25 dB of gain in the 60 MHz frequency band from 1930 to 1990 MHz. The amplifier operates on +27 Vdc, and is mounted directly on a heat sink, which is temperature monitored by a thermal sensor. If the heat sink temperature exceeds 85°C, a high temperature fault occurs. The alarm logic controls the transistor bias voltage, which shuts down the amplifier.

4.5.1.3 Error Amplifier

The main function of the error amplifier is to sample and amplify the signal distortion level generated by the main amplifier, to a level that cancels out the distortion and IMD when the error signal is coupled onto the main signal at the amplifier output. The error amplifier is a balanced multistage, class AB amplifier, has 75 dB of gain, and produces over 100-watts peak output. The amplifier operates on +27 Vdc and is mounted directly on a heat sink.

4.5.1.4 Amplifier Monitoring

In the main and error amplifier modules, all normal variations are automatically compensated for by the feedforward loop control. However, when large variations occur beyond the adjustment range of the loop control, a loop fault will occur. The alarms are displayed on the front panel indicators and output via a 21-pin connector on the rear of the module to the subrack summary board for subsequent remote monitoring via the ALARMS connector.

4.5.2 Amplifier Module Cooling

Although each amplifier module contains its own heat sink, it is cooled with forced air. Four fans are used for forced air cooling and redundancy. The fans, located on the front and rear of the amplifier module, draw air in through the front of the amplifier and exhaust hot air out the back of the module. The fans are field replaceable.

4.5.3 Intermodulation

The G3S-1900-125 amplifier is designed to deliver a 125-watt composite average power, multicarrier signal, occupying a bandwidth less than or equal to 20 MHz, in the bandwidth from 1930 to 1990 MHz. The maximum average power for linear operation, and thus the amplifier efficiency, will depend on the type of signal amplified.

4.5.3.1 Two Tone Intermodulation

When measured with two equal CW tones spaced anywhere from 30 kHz to 20 MHz apart, and at any power level up to the average power, the third order intermodulation products will be below -63 dBc

4.5.3.2 Multitone Intermodulation

Adding more tones to the signal will lower individual intermodulation products. If the frequencies are not equally spaced, the level of intermodulation products gets very low. When the frequencies are equally spaced, those products fall on top of each other on the same frequency grid. The average power of all intermodulation beats falling on the same frequency is called the composite intermodulation; it is -63 dBc or better.

4.5.4 Amplifier Monitoring

The amplifier has a separate remote alarm and control connector, which may be used by the host system to monitor and control the individual amplifier modules. The status, alarm, control, and power connections on the amplifier connector are made through a 21-pin male D-Sub combo connector and are listed and described in the *Amplifier Module DC and Logic Connector Definition* table.

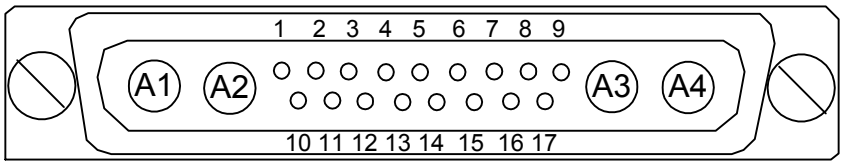

DC and Logic Connector (Male, on Rear of G3S-1900-125 Amplifier Module]

Amplifier Module DC and Logic Connector Definition

PIN	Function	Description
A1	Power Input	+27 Vdc (Power Contact)
A2	Power Input	+27 Vdc (Power Contact)
A3	Ground	Ground (Power Contact)
A4	Ground	Ground (Power Contact)
1	RS485 +TxD	Serial Communication Data Out
2	RS485 +RxD	Serial Communication Data In
3	Service Loop	TTL input to Amp. Gnd. for special test mode (Note 1)
4	MCPA Disabled (Summary Fault)	TTL signal normally low indicates MCPA enabled. A high level indicates that the MCPA has been disabled. Over Power, Over Voltage takes one second to activate the signal.
5	Mod Addr 0	TTL input to Amp. Gnd. supplied by shelf to identify slot.
6	Mod Addr 1	TTL input to Amp. Gnd. supplied by shelf to identify slot.
7	TP1	TTL output. Future test point.
8	Manual Download	GND to download manually
9	DC on stat	TTL output. High indicates Amp is powered on.
10	RS485 –TxD	Serial Communication Data Out
11	RS485 –RxD	Serial Communication Data In
12	SCL7	No connection
13	SDA7	No connection
14	FP Disable Output	Output, GND if the front panel switch is in the OFF position; +5 volts indicates the front panel switch is in the ON position.
15	FP RST	Output, GND if the front panel switch is in the RESET position; +5 volts otherwise.
16	GND	Ground
17	Module Detect	Ground potential. Informs the subrack that an MCPA is plugged in.

Note 1: Service loop grounded allows the MCPA to be enabled or disabled by the front panel switch when not mounted in the shelf.

4.5.5 Pilot Tone Control

The multi-amplifier subracks can be used to control the pilot tone frequency of the installed amplifiers. Pilot tone frequency selection is based on the intended operational band of the amplifiers per the following table.

Pilot Frequency Setting Based on PCS Frequency Block of Operation

Block Designator	Transmit Frequency Band (MHz)		
	Base Station	Bandwidth	Pilot (MHz)
A	1930-1945	15	1945.5 (A)
D	1945-1950	5	1950.5 (D)
B	1950-1965	15	1965.5 (B)
E	1965-1970	5	1964.5 (E)
5	1965-1970	5	1970.5 (5)
F	1970-1975	5	1969.5 (F)
C	1975-1990	15	1974.5 (C)
Block Pairs			
A-D	1930-1950	20	1950.5 (D)
D-B	1945-1965	20	1965.5 (B)
B-E	1950-1970	20	1970.5 (5)
E-F	1965-1975	10	1964.5 (E)
F-C	1970-1990	20	1969.5 (F)
E-C Excluding F	1965-1990 Excluding: 1970-1975	25	1974.5 (C)

Notes:

1. If the Block Designator has not been previously selected through serial communication on connector J10M, pilot defaults to 1960.5 MHz on the G3S-1900-80 amplifier; 1964.5 on the G3S-1900-125 amplifier
2. If the Block Designator is selected through serial interface on connector J10M, pilot frequency is moved to the appropriate spot and is stored permanently into the microprocessor until another band is changed.

If the pilot tone is not moved and signals are transmitted in B-band, some traffic channels may transmit directly on the pilot tone. The pilot tone requires a guard band of 60 KHz for TDMA, 270 KHz for CDMA (IS-95), and 400 KHz for GSM. Transmitting on the pilot tone will cause the amplifier to go into Loop Fail. This will not damage the MCPA. However, CDMA customers will experience a Loop Fail in every sector where the amplifiers are installed. TDMA and GSM customers will experience intermittent Loop Fails in the sectors that use these frequencies.

On the other hand, if the pilot tone is not moved and signals are transmitted in A-band (1930-1945) or C-band (1975-1990), the instantaneous bandwidth of the amplifier will be exceeded. This will cause equipment operated in the outer bands of the PCS band to experience higher intermodulation distortion, which may in turn cause them to exceed FCC emission limits. The lower end of the PCS band presents the farthest frequency span from the pilot tone, which begins at 1930 MHz; 30.5 MHz away from the pilot tone of the G3S-1900-80 amplifier; 34.5 MHz away from the pilot tone of the G3S-1900-125 amplifier.

Setting the pilot tone frequency of the amplifiers requires a laptop interface program. The laptop can be connected to the multi-amplifier subrack's RS-232 port. The multi-amplifier subrack provides the interface to the amplifiers to set their pilot frequency and stores this setting in memory. If an amplifier fails, the multi-amplifier subrack programs the pilot frequency of the replacement amplifier to that of the other installed amplifiers.

Refer to the Site Preparation and Installation Manual or Field Replaceable Units manual for the pilot tone configuration procedure. Contact Powerwave to obtain a copy of the program and related instructions.

4.6 MCR21929-1-2 Amplifier Subrack

4.6.1 Overview

The MCPA system is a linear, feed-forward power amplifier system that operates in the 60 MHz frequency band from 1930 to 1990 MHz with an instantaneous bandwidth of 20 MHz. It consists of an amplifier subrack with up to two 125-watt G3S-1900-125 plug-in amplifiers.

The MCR21929-1-2 houses an RF power splitter/combiner and a control module that monitors the functional status of all plug-in amplifiers. Additionally, the subrack is equipped with an Automatic Power Control (APC) circuit and an RF GAIN ADJUST potentiometer. The APC indicator and GAIN ADJUST potentiometer are located on the upper front of the subrack as shown below. Each subrack provides two RS-485 alarm interface ports, a preamp alarm interface port, a Form-C alarm interface port and an RS-232 maintenance port, as well as, RF IN, RF OUT and a –50dB RF sample port. Only the two RS-485 alarm interface ports are used to report alarm status to the SIM. Subrack alarms are daisy chained together and address switches on the front panel are set to identify the appropriate sector.

When two of the same model amplifiers are used, the system offers up to 218 watts of output power (after combiner insertion losses) using the 125-watt amplifier.

MCR21929-1-2 (Reach-through (Pseudo) Front Access) - This 19-inch flush mount subrack has front “reach through” access to its interconnect panel located at the rear of the subrack.

4.6.1.1 Controls, Indicators, & Interfaces

The location and function of the amplifier subrack controls and indicators is depicted below and described in the paragraphs that follow.

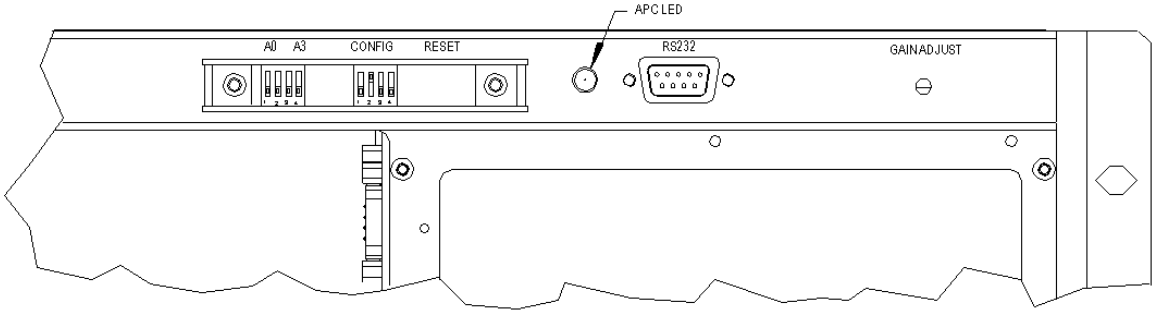

MCR21929-1-2 Controls and Indicators

4.6.1.1.1 AO A3 (Address) Switch

This four-position DIP switch is used for setting the external RS-485 alarm bus address.

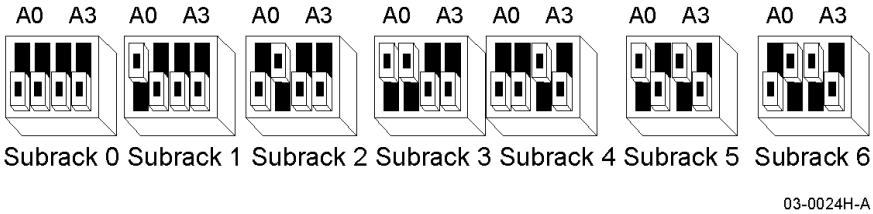

MCR21929-1-2 Address Switches

4.6.1.1.2 Config Switch

This four-position DIP switch is used for selecting software features in the amplifier subrack. Refer to *Gain Modes* later in this section for a description. Preamplifiers are not used in this system, so the second dip switch is set to Off, as indicated below in the left two diagrams.

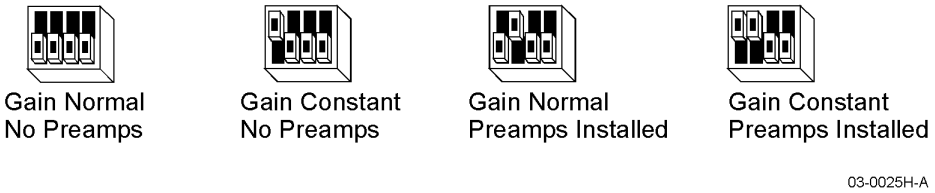

MCR21919-1-2 Configuration Switch

4.6.1.1.3 APC LED

The LED indicator located on the top right-hand corner of the subrack serves several functions. Under normal conditions, the indicator is off. Anytime the APC function is engaged, either from an overdrive or voltage derating situation, the indicator blinks. When the overdrive or voltage derating condition is removed and all the gain is recovered, the indicator ceases to blink and remains off. During maintenance functions such as downloading firmware and detector calibration, the indicator blinks to signify the beginning and end of those functions.

APC LED Sequence and Blink Rate

Operation	Sequence	Blink Rate
APC due to an overdrive	On/Off	1 Hz
APC due to an over voltage	On/Off/Off/On	1 Hz
APC due to an under voltage	On/Off/Off/On	1 Hz
System firmware upgrade	On/Off	0.1 Hz
Detector calibration	On/Off	1 Hz

4.6.1.1.4 Gain Adjust

This potentiometer allows the subrack gain to be attenuated 0 to 10 dB in Normal operating mode, or 0 to 3 dB in Constant Gain operation mode. Refer to *Gain Modes* later in this section.

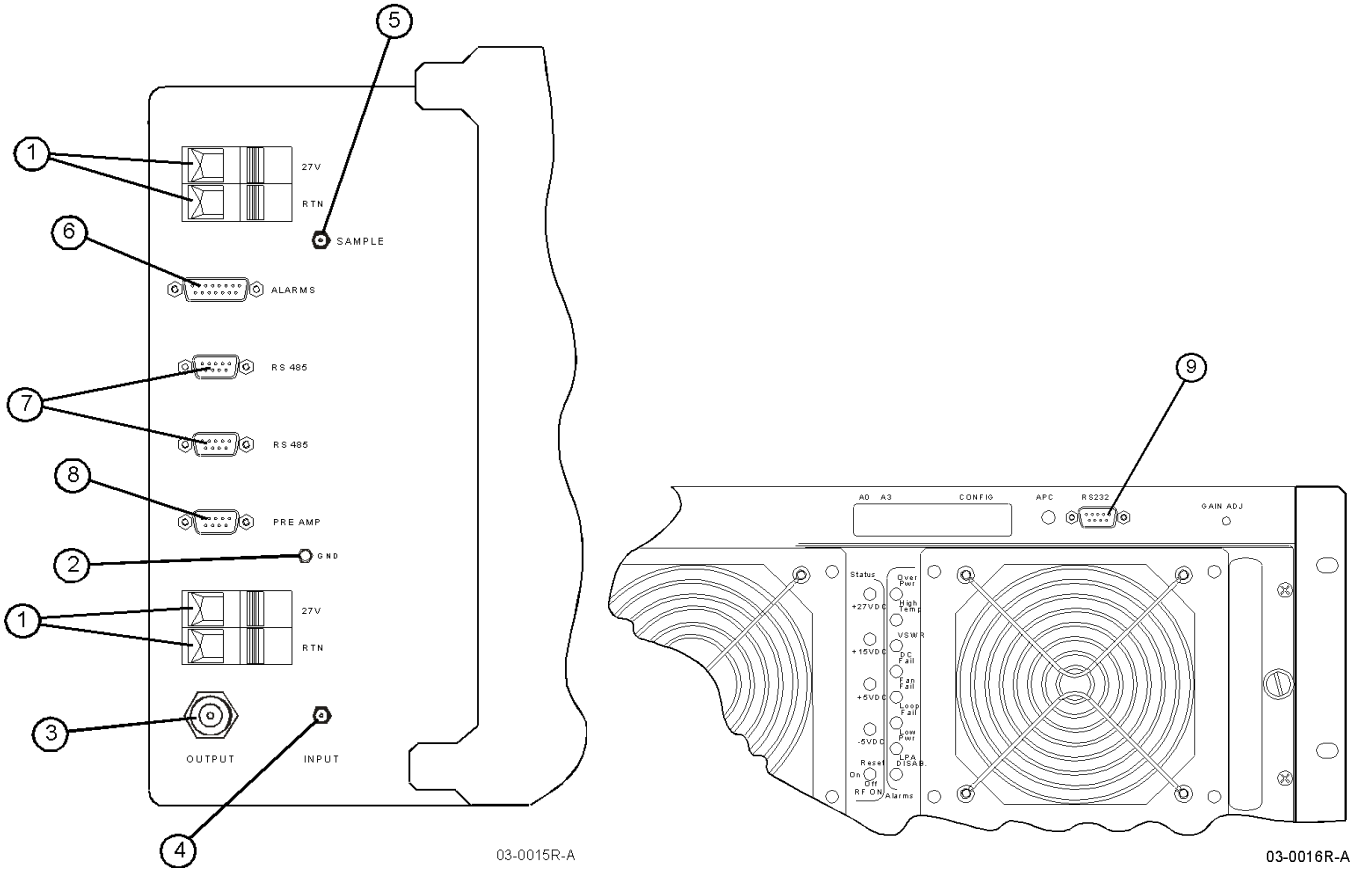

MCR21929-1-2 Subrack Input/Output Connectors

Reference Number	Name	Function
1	DC Power Terminals	Base station DC power connections.
2	GROUND Lug	Subrack chassis ground.
3	RF OUTPUT Connector	Type-N female coax connector, RF output to TX filter and antenna. See table A-1 for power output level of one to two amplifier module systems.
4	RF INPUT Connector	SMA female coax connector. RF input from combiner or TX card. See specifications for power input level.
5	RF SAMPLE Connector	SMA female coax connector. ~ –50 dB sample of the subrack RF output.
6	ALARMS Connector	15-pin female D-Sub connector. Permits remote monitoring of amplifier form-C dry contact alarms.
7	RS-485 Connectors	9-pin female D-Sub connector. Permits remote monitoring of RS-485 signals.
8	PREAMP Connector	9-pin female D-Sub connector. Permits remote monitoring of preamplifier and DC converter signals.
9	RS-232 Connector	9-pin female D-Sub connector. Permits downloading of software to the subrack and/or amplifiers.

4.6.2 Automatic Power Control (APC)

The APC is a power limiting function that limits the composite output power to 0.2dB to 1.0dB greater than the rated power for the inserted MCPA combinations. If the output power of the subrack exceeds an “engage” threshold (see below) the gain is reduced. The LED indicator located on the top front-right of the subrack blinks when the APC is engaged. The gain is reduced until the output power complies with the “settle” range threshold. As the input drive reduces, the gain recovers by the amount needed to approach the nominal output power, until the original gain is achieved. Any power level in between the nominal and the engage threshold does not warrant a gain change.

APC Limit Thresholds (Watts)(G3S-1900-125)

MCPAs	**Nominal**	**Engage**	**Settle**
1	109	122	112
2	218	244	222

4.6.3 Gain Modes

The subrack can be operated in either standard gain or constant gain mode. The choice of two gain modes provides system design flexibility. Standard gain is the mode most often selected by system designers and is the factory default setting of the subrack. Standard gain mode changes the gain of a subrack based on the number of installed functional modules, while constant gain restricts the gain of the subrack to that of about one module, regardless of the number of modules installed.

When a given sector is operated at full available power to maximize call capacity or when more system gain is needed, standard gain mode is best. At lower power level requirements or when a specific system gain value must be maintained, the system designer may elect to use constant gain mode instead. Constant gain mode maintains a consistent cell site coverage footprint while allowing N+1 redundancy and increased system reliability. By installing one more amplifier than the RF power plan requires, Constant gain mode allows for a back-up amplifier, should one of the cell site’s amplifiers become inoperable.

Standard gain or constant gain is independently selectable on a sector-by-sector basis.

Subrack Gain

Active	***Gain Mode***	
MCPAs	***Standard***	Constant
2	51.5	48
1	48.5	48

4.6.3.1 Standard Gain Overview and Application (Default Configuration)

In the standard gain mode, the gain of the system is dependent on the number of amplifiers operating at a given time and the power from the amplifiers is used at or near their maximum limits. When the design of the cell site requires full power from the amplifiers installed in the subrack in order to achieve maximum call capacity, the standard gain mode should be used. For example, if the sector design calls for 150 watts (measured at the directional coupler output; assuming 1.5 dB of loss from the subrack to the directional coupler), the sector should be configured with two 125 watt amplifiers (154 watts at directional coupler; 51.5 dB subrack system gain) to take full advantage of the available power. The trade-off here, is that if an amplifier fails, the available power drops back to 77 watts, the overall gain drops by 3.0 dB, and all the transmit channel powers drop by 3.0 dB as well (i.e. 7.5 watts to 3.75 watts per channel).

Gain adjustment via the front panel potentiometer is available.

4.6.3.2 Constant Gain Overview and Application

In constant gain mode, the gain of the subrack remains the same, regardless of the number of amplifiers installed. Good engineering practice requires careful planning when using constant gain mode. When the design of the cell site requires much less than maximum power, but must maintain a specific radius of coverage, constant gain mode is ideal. For example, if the sector design calls for 75 watts output power at the directional coupler, the sector must be configured with two 125 watt amplifiers (87 watts; 48 dB gain) when constant gain is enabled to allow for amplifier failure. If an amplifier fails, the available power drops back to 43 watts, the subrack gain adjusts to remain 48 dB (77 watts), and all the transmit channel powers remain at the set power (i.e. 7.5 watts per channel).

However, while in constant gain mode, if the sector power is set to maximum (i.e. 100 watts *with two amplifiers installed), and an amplifier fails, the remaining amplifier will be over-driven and likely to go into an over power condition. Should this occur, the sector would go into APC control, the input power is attenuated (see paragraph 4-5), the sector's footprint shrinks and an alarm is sent to the switch.*

Gain adjustment via the front panel potentiometer is available.

4.6.3.3 Gain Mode Control and Theory

The MCR21929-1-2 subrack adds 3 dB of attenuation when constant gain mode is initially activated, reducing the system gain of the MCR21929-1-2 from a nominal of 51.5 dB to 48.5 dB. *Therefore, whenever the gain mode is changed from standard gain to constant gain or visa-versa, the cell technician must reset the overall system gain or individual channel power.*

In constant gain mode, the gain of each carrier (or the system) must remain constant to avoid reducing the cell radius. When the subrack detects an amplifier failure, the amplifier subrack reduces input attenuation through the Voltage Variable Attenuator (VVA) by the amount of gain lost while the amplifier is removed from the circuit. This allows the system gain to remain constant, and allows the cell site to maintain a consistent footprint. When the replaced MCPA is enabled, attenuation is again added to the input port of the subrack by the amount of gain introduced by the replacement MCPA to maintain an overall subrack constant gain.

As MCPAs are disabled and enabled, system gain is recovered within a 1-second time frame. The subrack is shipped from the factory with the configuration switch set for Standard Gain mode active.

4.6.4 Performance Derating With Lower Supply Voltage

The MCPA system will operate at full power, while meeting all spectrum requirements, over a supply voltage range of 26 to 28 VDC. The MCPA System will meet derated spectrum requirements at derated output power levels over a supply voltage range of 21 to 30 VDC. MCPA System power derating levels are outlined in below. The LED indicator located on the top front right of the subrack blinks when the output power is derated.

Power Derating Versus Voltage Profile

Supply Voltage[VDC]	Output Power Derating
28V ≤ V < 30V	0.5dB
26V ≤ V < 28V	0dB
24V ≤ V < 26V	0.5dB
22V ≤ V < 24V	1.0dB
21V ≤ V < 22V	1.5dB

As the voltage returns to nominal levels, the output power will return accordingly. Sufficient hysteresis of at least 0.1 V is included to eliminate 'toggling' at crossover voltage levels.

4.6.5 Amplifier Monitoring

The amplifier alarms are displayed on the front panel indicators and output via a 21-pin connector on the rear of the module to the subrack summary board for subsequent remote monitoring via the ALARMS connector. The subrack interprets the amplifier alarms, reacts accordingly, and provides alarm status to the base station through both the Form-C and RS-485 alarm bus.

Amplifier alarms may be monitored through the dry contact ALARMS 15-pin female D-sub connector on the rear of the subrack. Refer to *Alarm States* and *ALARMS Connector Definition* tables and alarm connector figures below for pin definition of the alarms connector.

Alarm States

			Form-C					RS-485		
			Minor	Major	Critical	Major	Critical	Minor	Major	Critical
	MCAs Installed	MCAs Enabled				Pre-amp	Pre-amp			
	2	2		0	0				0	0
	2	1		1	0				1	0
	2	0		1	1				0	1
	1	1		0	0				0	0
	1	0		1	1				0	1
	One Fan Fault		1					1		
	No Fan Fault		0					0		
OPTIONAL	No Preamp Fault					0	0		0	0
OPTIONAL	One Side Preamp Fault					1	0		1	0
OPTIONAL	Both Sides Preamp Fault					1	1		0	1

0 = Low (no alarm)
1 = High (alarm)

4.6.5.1 Form C Alarms (not used)

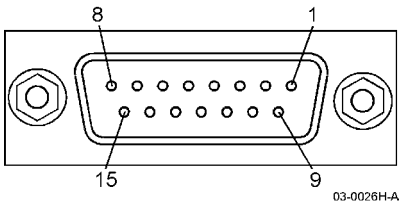

Form-C Alarms Connector

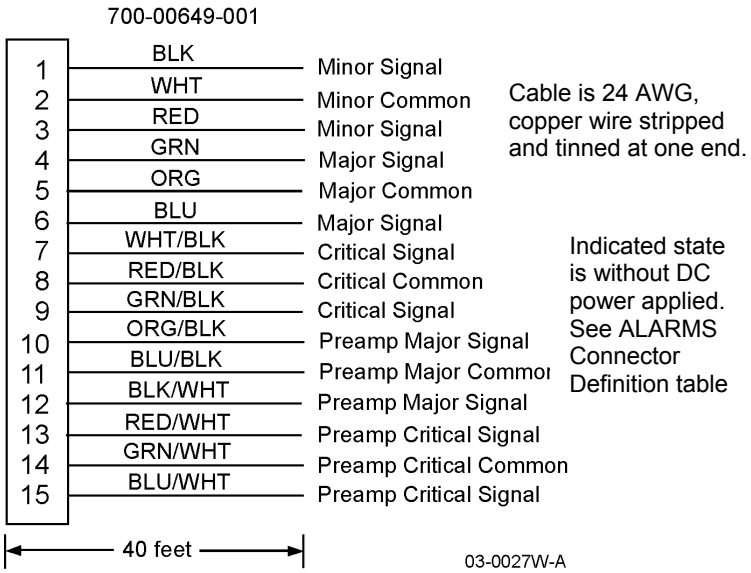

Alarm Cable (optional), P/N 700-00649-001

ALARMS Connector Definition

PIN	Alarm Type	Function	Operating State	Alarm State
1	Minor	Continuity with common if no fan fault	Closed	Open
2	Minor	Common	Common	Common
3	Minor	Continuity with common if one or more fan faults on any MCPA	Open	Closed
4	Major	Continuity with common if all installed MCPAs are active	Closed	Open
5	Major	Common	Common	Common
6	Major	Continuity with common if one or more MCPAs are disabled	Open	Closed
7	Critical	Continuity with common if one or more MCPAs are active	Closed	Open
8	Critical	Common	Common	Common
9	Critical	Continuity with common if all installed MCPAs are disabled	Open	Closed
10	Preamp Major	Continuity with common if external preamp is functioning correctly	Closed	Open
11	Preamp Major	Common	Common	Common
12	Preamp Major	Continuity with common if external preamp primary channel faults	Open	Closed
13	Preamp Critical	Continuity with common if external preamp primary and redundant channels are functioning correctly	Closed	Open
14	Preamp Critical	Common	Common	Common
15	Preamp Critical	Continuity with common if external preamp primary and redundant channels are faulted	Open	Closed

4.6.5.2 RS-485 Connectors (J4, J5)

RS-485 signals are monitored through the RS-485 9-pin female D-sub connector on the rear of the subrack.

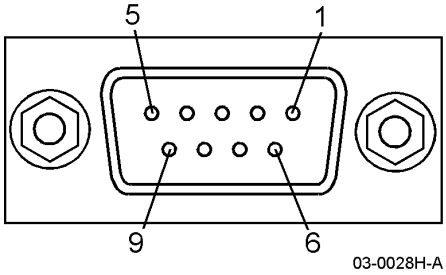

DB9 Connector

RS-485 and Preamp Connector Definition

PIN	Description	PIN	Description
1	RS-485 TX data +	6	No Connection
2	RS-485 TX data -	7	No Connection
3	RS-485 RX data +	8	No Connection
4	RS-485 RX data -	9	Ground
5	Ground/Shield		

4.6.5.3 Preamp Connector (J6; not used)

Alarm information from the system preamplifiers are monitored through this female 9-pin sub connector located on the rear of the MCPA subrack. The OPAF-1923-P07C01 does not employ preamplifiers.

Preamplifier Alarm Connector Definitions

PIN	Description	PIN	Description
1	No Connection	6	PA Major +
2	No Connection	7	PA Major -
3	RS-232 TX	8	PA Critical +
4	No Connection	9	PA Critical -
5	Ground/Shield		

4.6.5.4 RS-232 Connector

This port is configured for RS-232 serial communications. Refer to the DB9 figure and the *RS-232 Connector Definition (J20)* table for pin location and definition. The RS-232 interface is located on the front of the amplifier subrack. The purpose of this connector is to provide a system interface for upgrading firmware, displaying output power and system status, and configuration. These tasks are performed using a PC with interface software. The connector is a type DB-9. The RS-232 port is only enabled if pin 8 is grounded. Grounding pin 8 disables the two RS-485 host interface ports. Standard 8-bit, 1-stop bit, no parity, 9600 Baud provides the appropriate interface communication setting.

RS-232 Connector Definition (J20)

PIN	Description	PIN	Description
1	No Connection	6	No Connection
2	RS-232 RX	7	No Connection
3	RS-232 TX	8	Select = 0 (grounded)
4	No Connection	9	No Connection
5	Ground		

4.6.6 Pilot Tone Control

Refer to paragraph 4.4.5 for a full description of the amplifier pilot tone. The MCR21929-1-2 subrack can be used to control the pilot tone frequency of the installed amplifiers. Pilot tone frequency selection is based on the intended

operational band of the amplifiers and must be set during commissioning of the base station, and anytime the MCR21929-1-2 subrack is replaced.

Setting the pilot tone frequency of the amplifiers requires a laptop interface program. The laptop can be connected to the MCR21929-1-2's RS-232 port. The MCR21929-1-2 provides the interface to the amplifiers to set their pilot frequency and stores this setting in memory. If an amplifier fails, the MCR21929-1-2 programs the pilot frequency of the replacement amplifier to that of the other installed amplifiers.

4.7 DLNA

4.7.1 Duplexer Overview

The Duplexer Low Noise Amplifier (DLNA) module provides Bandpass filtering for both the uplink (receive) and downlink (transmit) paths, as well as gain for the receive path and alarm monitoring for receive gain and VSWR. The DLNA presents excellent return loss on all ports with 18 dB or better. The coupled ports are accurate to ±1.0 dB; the –55 dB sample port is accurate to ±2.5 dB

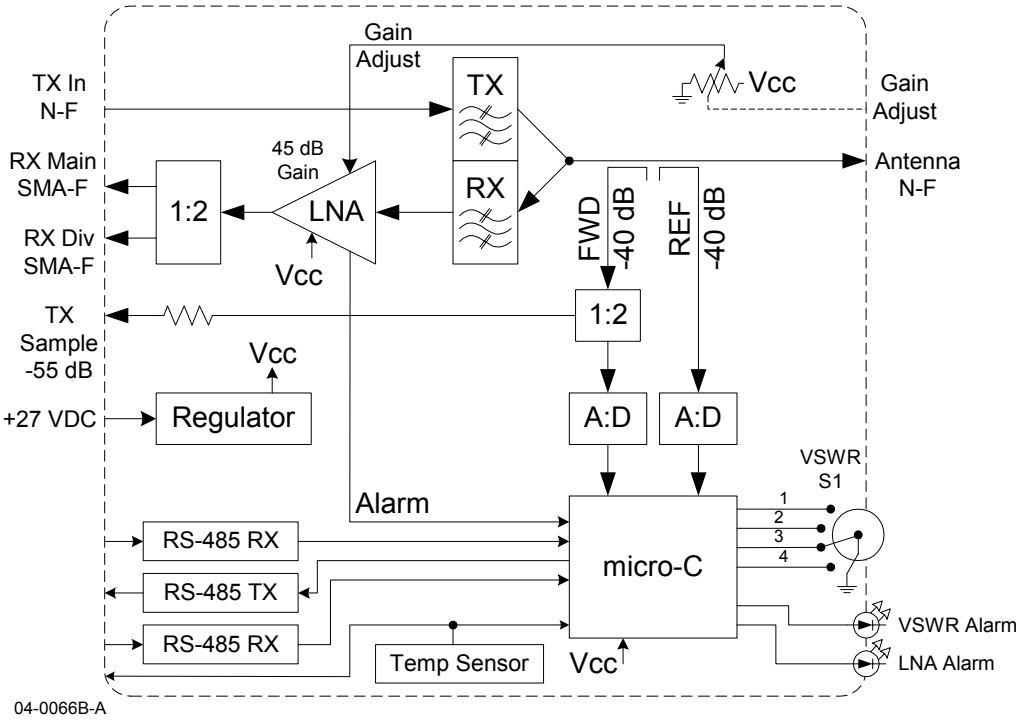

DLNA Block Diagram

4.7.2 Receive Path Overview

The receive path provides for a variable gain Low Noise Amplifier (LNA) from 43 to 45 dB. The LNA gain is controlled from a front panel 10-turn potentiometer. The LNA is set to 45 db of gain from the factory. The output of the LNA is further split into two paths, reducing the receive gain by approximately 3.3 dB, for input to the base station. The noise figure of the DLNA is typically better than 2 dB at room temperature including all DLNA components. The main receive path is used for the 8x8 configuration. The diversity receive path is used for the 16x16 configuration.

A microprocessor in the DLNA monitors the current draw of the LNA. If the LNA current draw drops below a predetermined threshold, an LNA alarm is generated back to the SIM. In addition, a front panel LED is illuminated when the LNA fails.

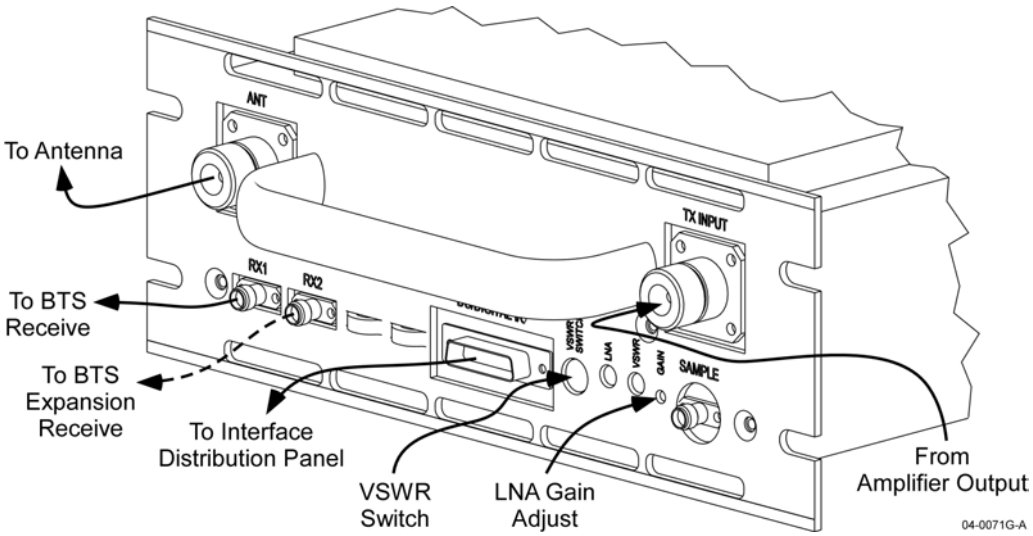

DLNA Front Panel

4.7.3 Transmit Path Overview

The transmit path receives amplified RF signals from the MCR21929-1-2 amplifier subrack. The amplified signals are filtered and duplexed with the receive signals and presented to the antenna port. The transmit filter provides 105 dB of isolation in the receive band between the transmit and antenna ports.

4.7.4 DLNA Alarms

VSWR and LNA alarms for the DLNA are given on the front panel and sent via an alarm bus to the SIM.

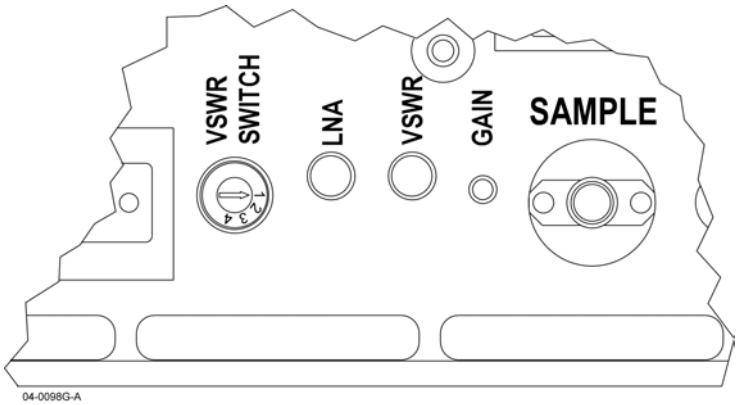

Close-up View of DLNA Front Panel

Alarm indications for the DLNA are as follows:

VSWR LED		
Green	(ON)	Normal
Red	(ON)	Alarm State 1
Yellow	(ON)	Alarm State 2
Green/Red	(OFF)	Alarm State 3
	Fast Flash	Test Mode
LNA LED		
Green	(ON)	Normal
Green	(OFF)	Loss of Supply voltage

A front panel four-position rotary switch is provided to set the VSWR alarm threshold based on the length of cable from DLNA output (typically FSJ4 or LDF4) to the antenna foam jumper (typically 1 5/8 Heliax). The switch position is set with a jeweler's screwdriver. As a general guide, set the switch as follows:

DLNA Number	Switch Position	Design Tolerance (dB)	Internal Cabinet Cable Loss	External Cabinet Cable Loss	Alarm Thresholds (in dB; Return Loss)		
					Alarm State 1 Minor	Alarm State 2 Major	Alarm State 3 Critical
0	1	1	0.25	<0.75	6 ±2	9.5 ±2.5	12 ±3
	2	2	0.25	>0.75, <1.75	8 ±2.25	11.5 ±3	14 ±3.5
	3	3	0.25	>1.75, <2.75	10 ±2.5	13.5 ±3	16 ±4
	4	Test	-	-	-	-	-
1	1	1	0.23	<0.77	6 ±2	9.5 ±2.5	12 ±3
	2	2	0.23	>0.77, <1.77	8 ±2.25	11.5 ±3	14 ±3.5
	3	3	0.23	>1.77, <2.77	10 ±2.5	13.5 ±3	16 ±4
	4	Test	-	-	-	-	-
2	1	1	0.16	<0.84	6 ±2	9.5 ±2.5	12 ±3
	2	2	0.16	>0.84, <1.84	8 ±2.25	11.5 ±3	14 ±3.5
	3	3	0.16	>1.84, <2.84	10 ±2.5	13.5 ±3	16 ±4
	4	Test	-	-	-	-	-
3	1	1	0.14	<0.86	6 ±2	9.5 ±2.5	12 ±3
	2	2	0.14	>0.86, <1.86	8 ±2.25	11.5 ±3	14 ±3.5
	3	3	0.14	>1.86, <2.86	10 ±2.5	13.5 ±3	16 ±4
	4	Test	-	-	-	-	-
4	1	1	0.09	<0.91	6 ±2	9.5 ±2.5	12 ±3
	2	2	0.09	>0.91, <1.91	8 ±2.25	11.5 ±3	14 ±3.5
	3	3	0.09	>1.91, <2.91	10 ±2.5	13.5 ±3	16 ±4
	4	Test	-	-	-	-	-
5	1	1	0.07	<0.93	6 ±2	9.5 ±2.5	12 ±3
	2	2	0.07	>0.93, <1.93	8 ±2.25	11.5 ±3	14 ±3.5
	3	3	0.07	>1.93, <2.93	10 ±2.5	13.5 ±3	16 ±4
	4	Test	-	-	-	-	-

4.7.5 DLNA Interface

The DLNA employs a DB-15 connector to communicate via the SIM and receive input DC power. Communication is accomplished using I^2C with the BTS signaling.

The SIM knows whether or not all DLNAs are connected by a module detect circuit provided on each DLNA (ground on pin 9).

J6 DB15 Pin Assignments

PIN	Description	PIN	Description
1	27V	9	Detect
2	27V	10	Temp Out
3	Ground	11	(mfg test use only)
4	Ground	12	(mfg test use only)
5	Write Protect	13	SCL_N (RX)
6	SCL_P (RX)	14	SDA_TX_N
7	SDA_TX_P	15	SDA_RX_N
8	SDA_RX_P		

Via I^2C, the alarms can be read and an EEPROM can be both read and written too. The SIM however does read the temp sensor on the DLNA. The DLNA has an RS-232 interface that is only used during test and is not wired out to the SIM.

The LNA alarm is sensed within the LNA for both low and high current. A single open collector output is read by the micro-controller and passed on the to I^2C interface.

4.8 Power Plant

The power plant incorporates EMI filtering, AC surge suppression, a series of circuit breakers, load sharing rectifiers, battery backup, DC power monitoring, and a Low Voltage Disconnect transfer switch.

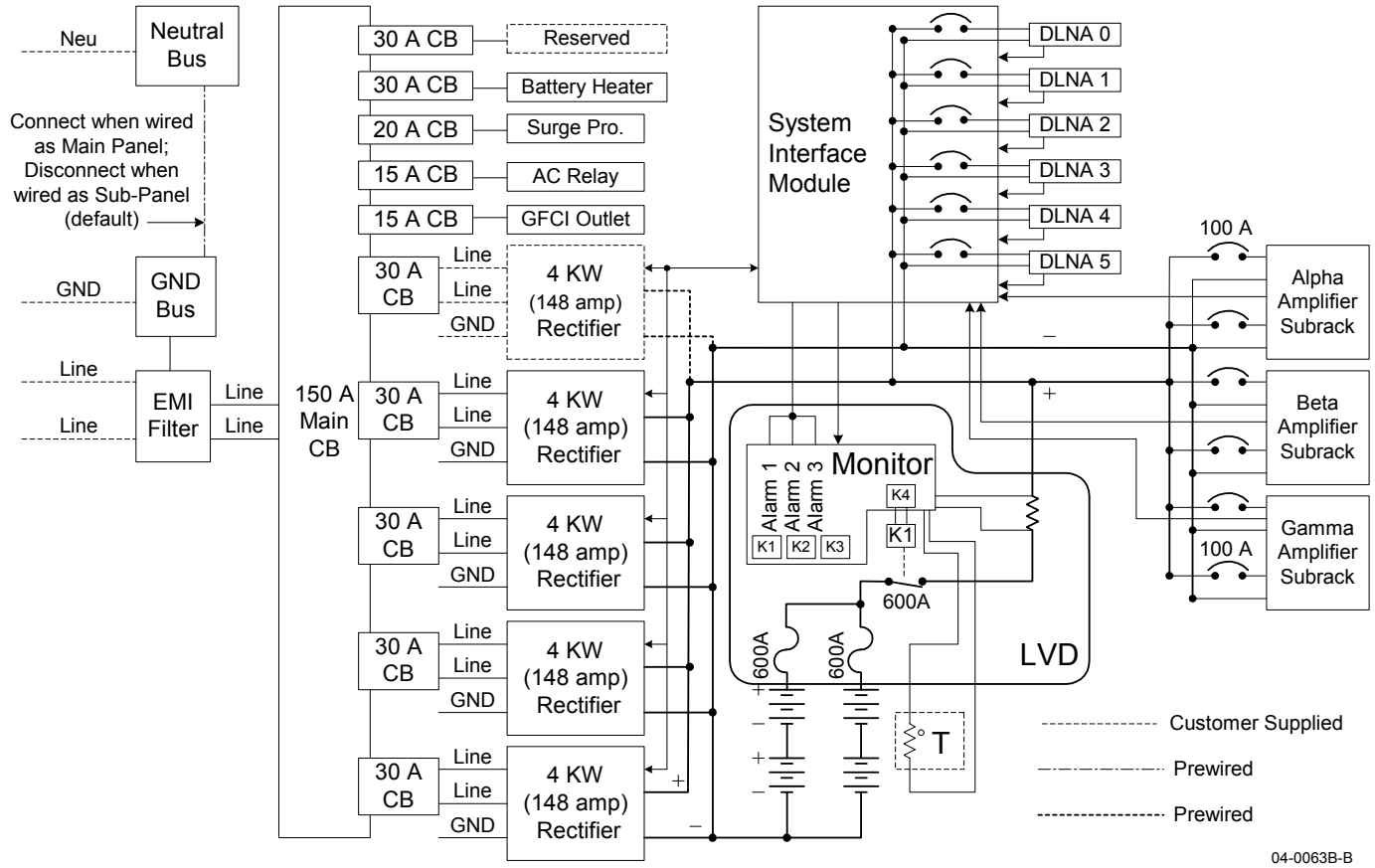

AC / DC Power Block Diagram

4.8.1 Rectifiers

A series of four 4 KW rectifiers (PN: 930-00018-005) is employed to provide the OPAF power. The rectifiers source 592 amps of combined output DC power at +27 VDC under normal operating conditions. The rectifiers are designed to operate on 180 to 264 VAC, single phase power, 47 to 63 Hz, and operate at 89% efficiency. They do not require any minimum load to operate. The rectifier system is modular in design. N+1 redundancy is built into the system, so a failure in one rectifier does not affect the performance of the base station. Each rectifier provides performance data and alarms to the LVD controller and the SIM. In addition to the 30 amp circuit breaker installed in the AC panel, each rectifier is protected by an internal 30 amp 3AG fuse.

The rectifier front panel provides 3 LEDs for quick fault determination

Rectifier LED Definitions

LED	Indication
AC Good	Green = OK
Temperature OK	Green = OK
DC Good	Yellow = OK

Rectifier Subrack Pin Assignments

PIN	Description	PIN	Description
1	5 Vbs	9	AC fail
2	5 Vbs rtn	10	V prog
3	Module Detect	11	V1 sense
4	Pgood	12	I monitor
5	On/off	13	Tem OK
6	I share	14	Rtn Sense
7	Mod-Ena	15	No Connection
8	0VP tp		

4.8.2 Batteries

Should the AC input power fail for any reason, four 12 Vdc, 105 AH (rated 8-hour capacity) deep discharge Valve-regulated Lead-Acid batteries provide 24 Vdc power for the entire cabinet. The LVD controller will accommodate other battery ratings, however, it is factory set for this battery.

The batteries provide a minimum of 12 minutes battery backup time at 25 deg C when presented with the full cabinet load. The batteries have a wide operating temperature range of –40 to +60 deg. C. The nominal charge voltage = 2.27-2.30V/Cell or 27Volts @ 25°C with temperature compensation.

nSubtract 3mV/ °C from +25 to +60°C

nAdd 3mV/ °C from +25 to -40°C

Battery Backup Time

No. of G3S-1900-125 Modules	MCPA Amperes	1 Battery String (Minutes)	2 Battery Strings (Minutes)
1	52.8	90	210
2	105.6	37.5	90
3	158.4	20	52
4	211.2	12	37.5
5	264.0	7	26
6	316.8	4	20

Note The charge rate of the batteries is set for C/10 for the batteries delivered with the system. If for any reason a different type of battery is installed in the system, charge must be changed to avoid improper charging of the batteries.

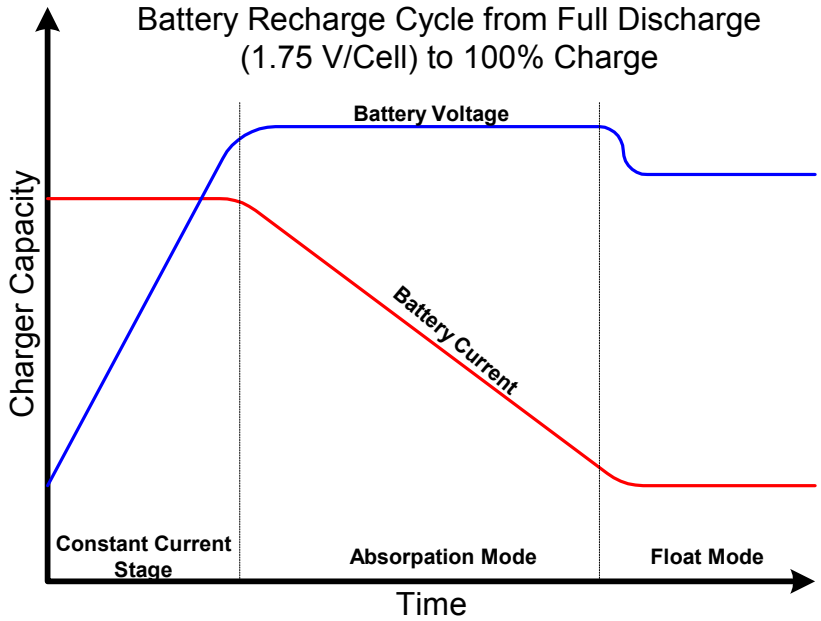

Recharge Time 4 x 4KW Modules

G3S-1900-125 MCPA		Load	Time to 80% Recharge (Hours)
1	MCPA	52.8	0.38
2	MCPA	105.6	0.36
3	MCPA	158.4	0.35
4	MCPA	211.2	0.38
5	MCPA	264	0.38
6	MCPA	316.8	0.42

The batteries meet: UL, NEBS, and EUROBAT requirements and have a 10 year plus classification compliance. They have also been tested in accordance with BS6290 Part 4. Two 600A fuses (Bussmann PN: TPL-CZ), located in the LVD, protect the batteries.

4.8.2.1 Battery Heater

The battery heater is a thin, sheet-like element located between metal panels directly beneath the batteries. The battery heater receives 240 volts AC (400 W) directly from the AC panel circuit breaker through a temperature sensitive relay. The AC contacts of the relay close when the ambient temperature in the battery compartment drops below 0 °C (32 °F) allowing the heater to warm the compartment. The heating pad is turned off when the thermostat reaches 10 °C (50 °F). A separate temperature probe is placed in the battery compartment that is used by the LVD to adjust the charge voltage, and is independent of the battery heater.

The battery heater generates 400 watts (1367 BTUs) of heat and has a maximum surface temperature of 200 ºC or 392 ºF.

4.8.3 Power Plant Monitoring

A controller card in the LVD monitors the performance of the rectifiers. When each rectifier's sense line is connected to the LVD, the rectifier is slaved to the control card for the final output voltage. Therefore, both the sense line and +27 Vdc bus between the LVD and the rectifier must be connected for the rectifier to supply the correct voltage to the system. The LVD control module may control up to 6 rectifier modules and adjusts rectifier output to the recommended battery float voltage for a given temperature.

The LVD controller ensures that the rectifier outputs are balanced and monitors the rectifiers for failures. A potentiometer located on the front plate of the controller sets the float voltage at 25°C (77°F). The factory preset is 27.6 Vdc. Failures are reported to the SIM.

The controller also monitors the battery compartment temperature. The output bus voltage is adapted with consideration to the temperature changes of the batteries. The compensation slope is user selectable as one of three values: -36mV/°C (-20mV/°F), –60mV/°C (-33.3mV/°F), and between -10°C (14°F) and 60°C (140°F). The factory setting is –36mV (-3mV/°C/cell). If the probe is not connected or fails to open, the output voltage falls back to factory preset and an alarm is generated.

04-0111G-A

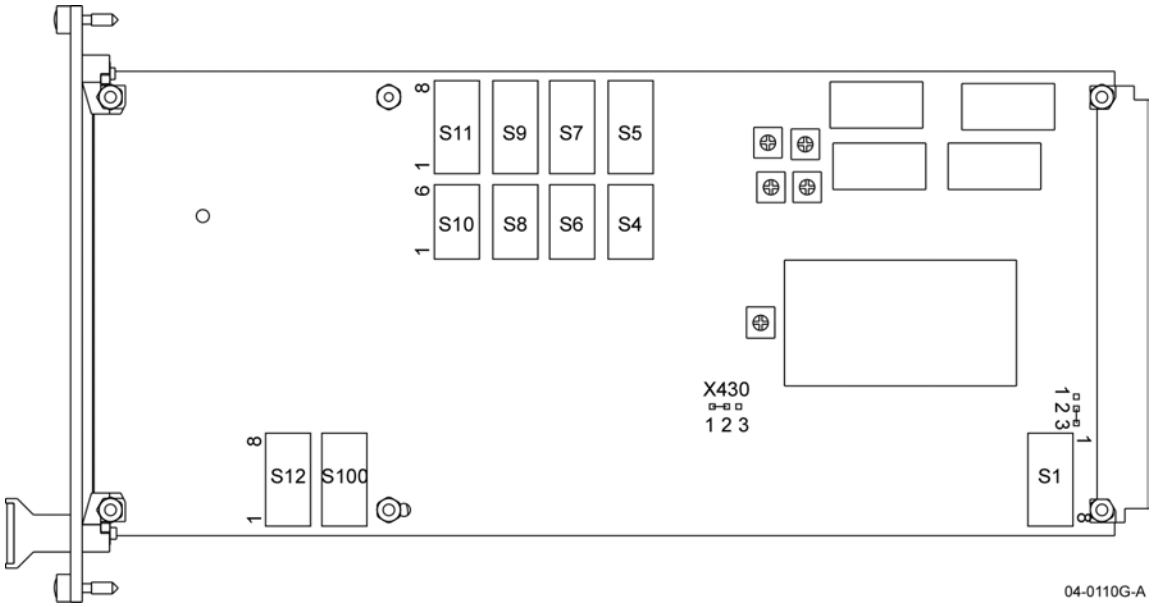

04-0110G-A

The LVD controller card switch settings are given in the table below.

Switch	Pos	State	Note	Switch	Pos	State	Note
S1	1	Off		S7	1	Off	
	2	Off			2	Off	
	3	Off			3	Off	
	4	Off			4	Off	
	5	Off			5	Off	
	6	**On**			6	Off	
	7	Off			7	Off	
	8	Off			8	Off	
S100	1	**On**		S5	1	**On**	
	2	Off			2	**On**	
	3	Off			3	**On**	
	4	Off			4	Off	
	5	Off			5	Off	
	6	Off			6	Off	
	7	Off			7	Off	
	8	Off			8	Off	
S12	1	Off		S10	1	Off	
	2	**On**			2	Off	
	3	**On**			3	Off	
	4	Off			4	Off	
	5	**On**			5	**On**	
	6	**On**			6	**On**	
	7	**On**		S8	1	Off	
	8	**On**			2	Off	
S11	1	Off			3	Off	
	2	Off			4	Off	
	3	Off			5	Off	
	4	Off			6	Off	
	5	Off		S6	1	Off	
	6	Off			2	Off	
	7	Off			3	Off	
	8	Off			4	**On**	
S9	1	Off			5	**On**	
	2	Off			6	**On**	
	3	Off		S4	1	Off	
	4	Off			2	Off	
	5	**On**			3	Off	
	6	Off			4	Off	
	7	Off			5	Off	
	8	Off			6	Off	

4.8.4 Low Voltage Disconnect (LVD)

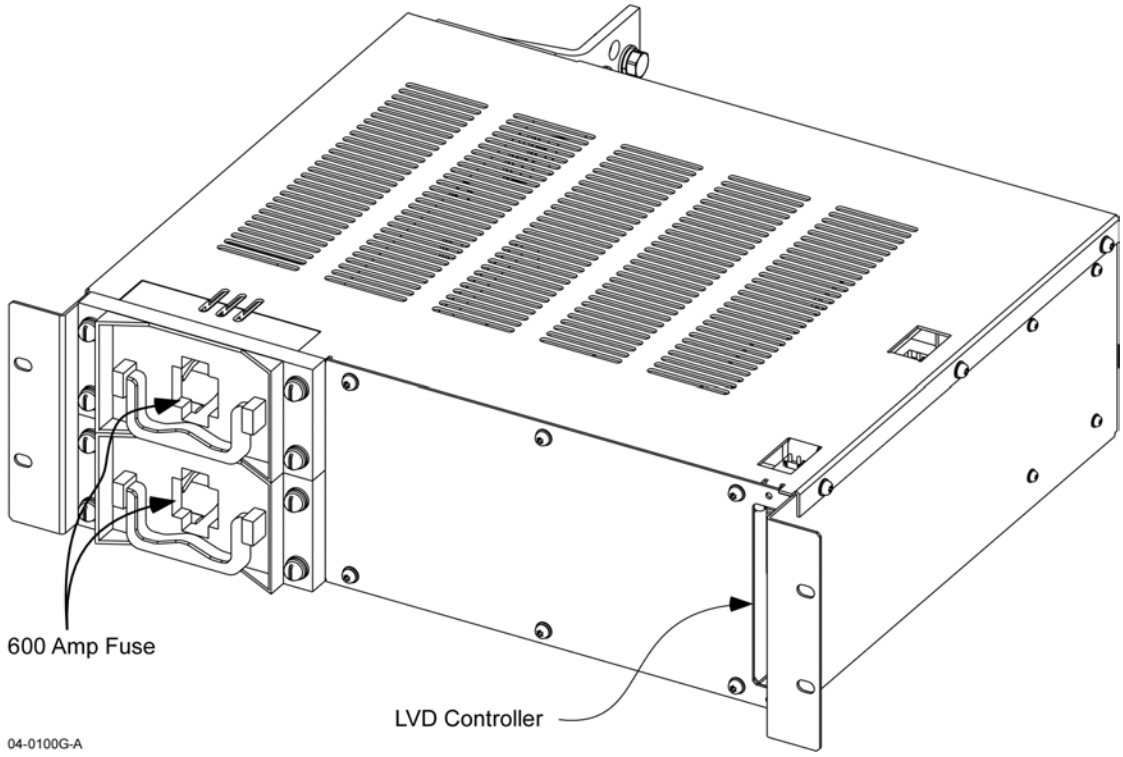

Low Voltage Disconnect Module

The purpose of the LVD is to monitor the DC bus to regulate the rectifier(s) output voltage with regard to the needed operating voltage to the system, and the appropriate charge voltage for the batteries. Should AC power fail, back-up batteries are installed in the system to provide a relatively short operational period, based on the amplifier load at the time of failure. When the battery performance declines to a predefined limit (21 Vdc in this system), the LVD controller disconnects the batteries from the load through a 600 amp transfer switch. Disconnecting the batteries at this threshold prevents permanent damage to the batteries, thereby extending the battery life. Low voltage alarms sent to the base station provide sufficient time to do initiate an orderly shutdown of the base station before power is lost.

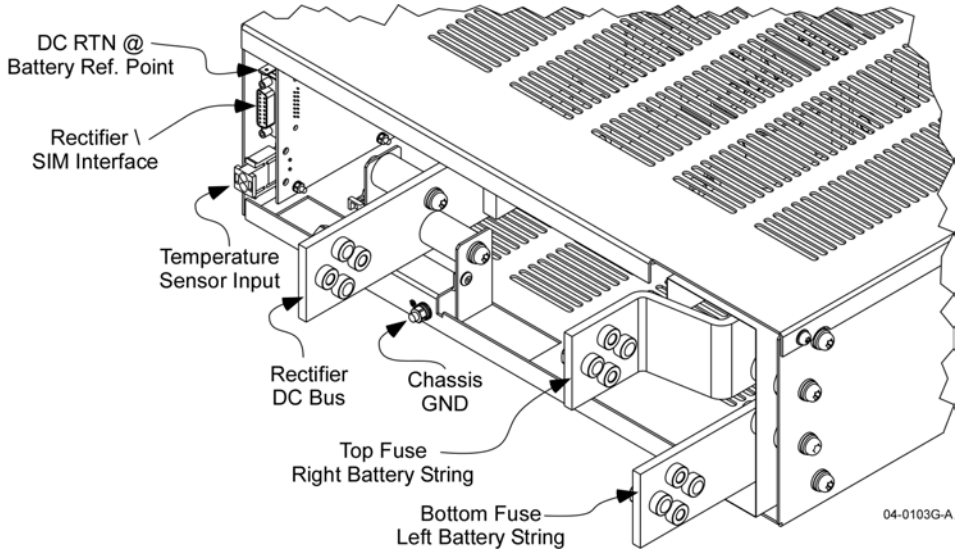

LVD Rear Panel Connections

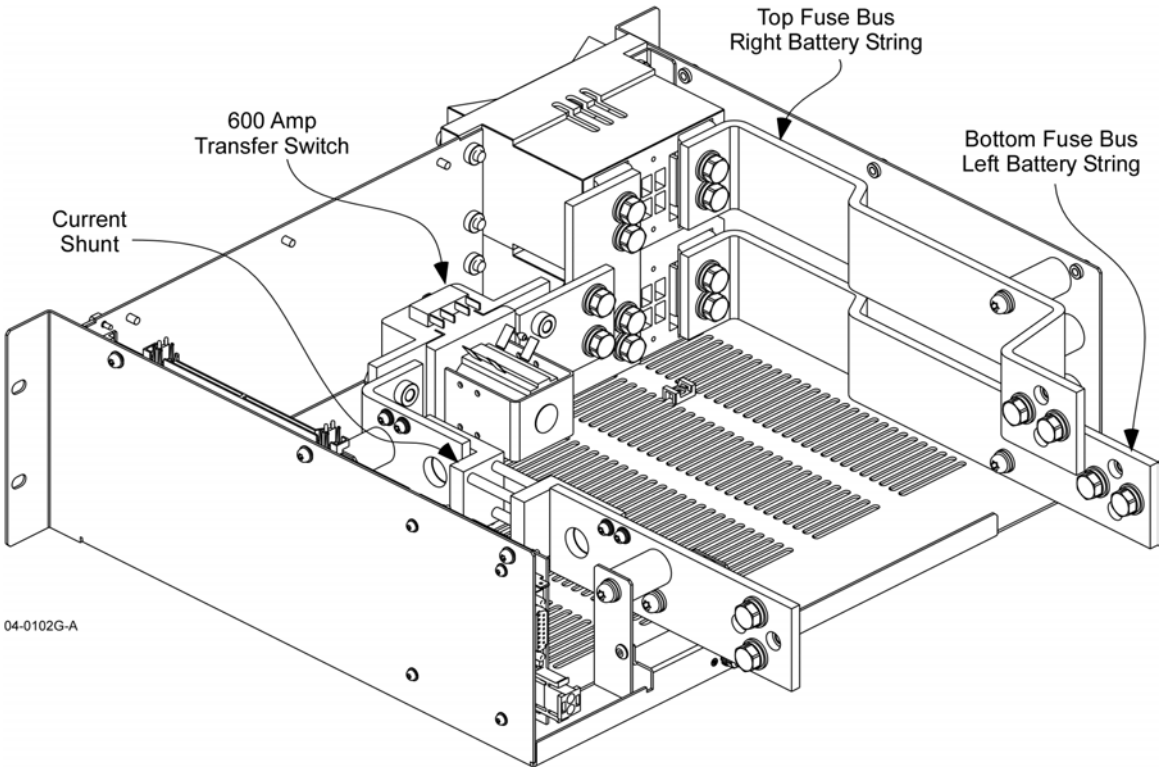

LVD Internal Component Locations

The controller functions of the LVD are described in the *Power Plant Monitoring* section of this manual.

4.8.5 Lightning Arrestors

Two lightning arrestors located in the AC electrical panel provide added protection to the cabinet when the cabinet is properly grounded. The lightning arrestors are equipped with push-button trip-resets. The lightning arrestors characteristics are given in the specifications section of this manual.

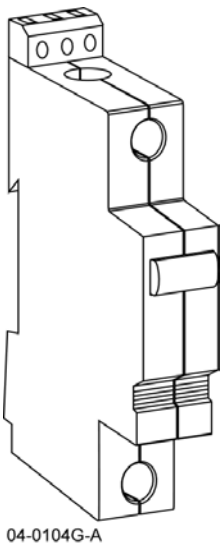

Lightning Arrestor

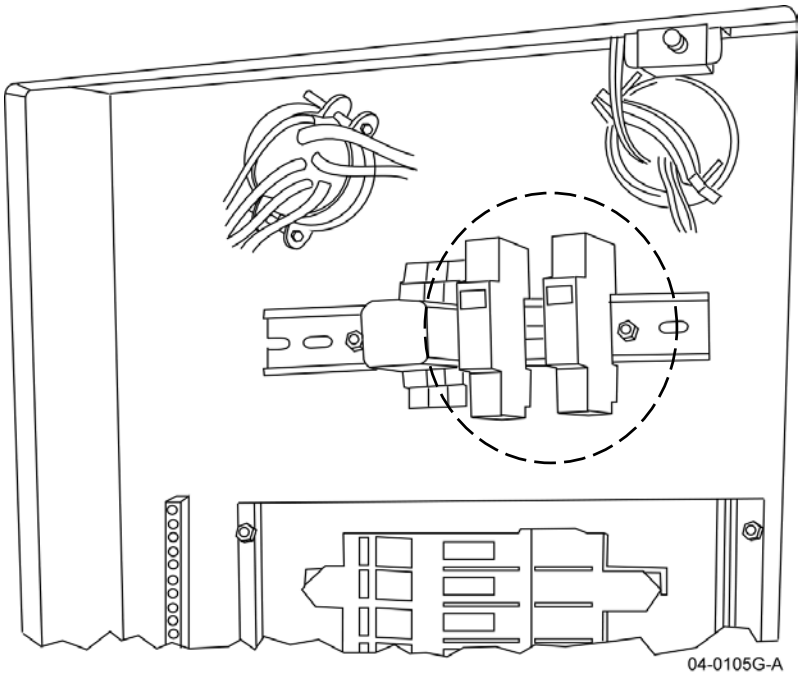

Circuit Breaker Panel, Top Portion

4.9 System Interface Module (SIM)

The SIM monitors the following system attributes and alarms:

Cabinet level alarms (DALI):
- Fan Fault
- Intrusion
- Temperature
- AC Fault
- AUX

MCPA Subrack level alarms (DALI):
- Minor (Fan Failure)
- Major (Single MCPA Failure in a full subrack)
- Critical (All MCPAs Failed in a full subrack)

DLNA level alarms (I^2C interface):
- LNA fault
- VSWR Monitor
- Temperature

Rectifier level alarms; up to 5 rectifiers (DALI):
- Temperature Good
- AC Input Good
- DC Power Output
- Module Detect

MCPA level alarms (integrated with the subrack alarms):
- Over Power
- High Temperature
- VSWR
- DC Fail
- Fan Fail
- Loop Fail
- Low Power

LVD (DALI):
- Transfer Switch
- Fuse Blown

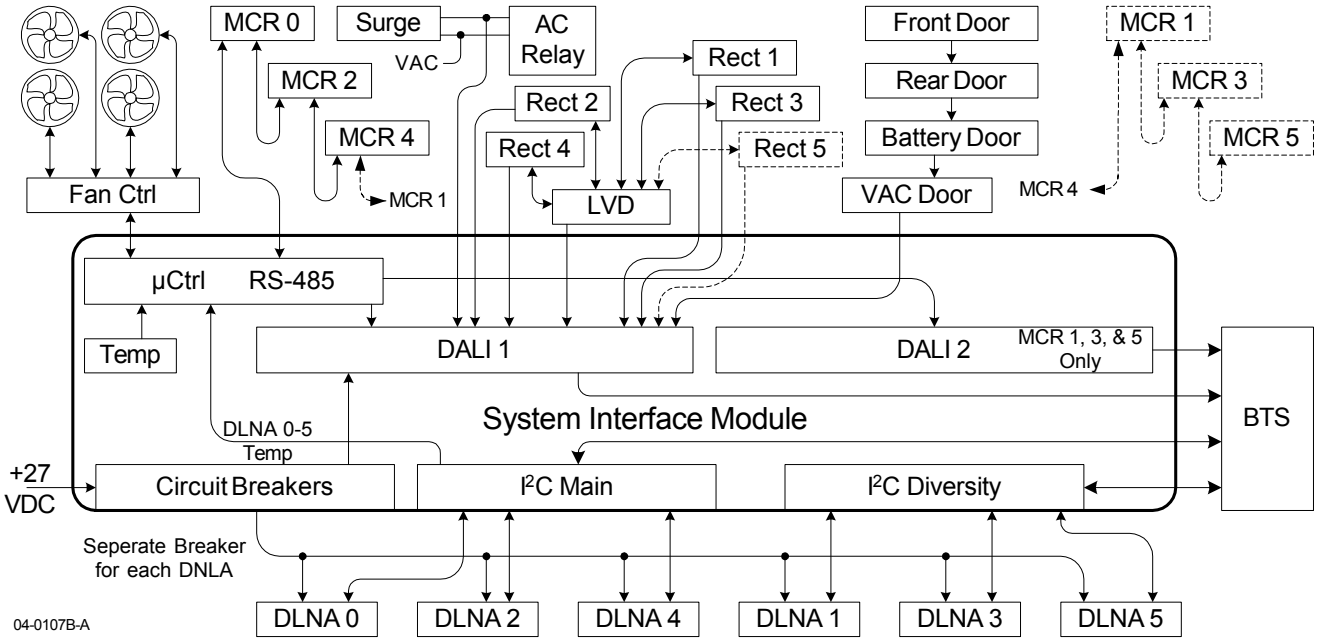

System Interface Module Interconnect & Block Diagram

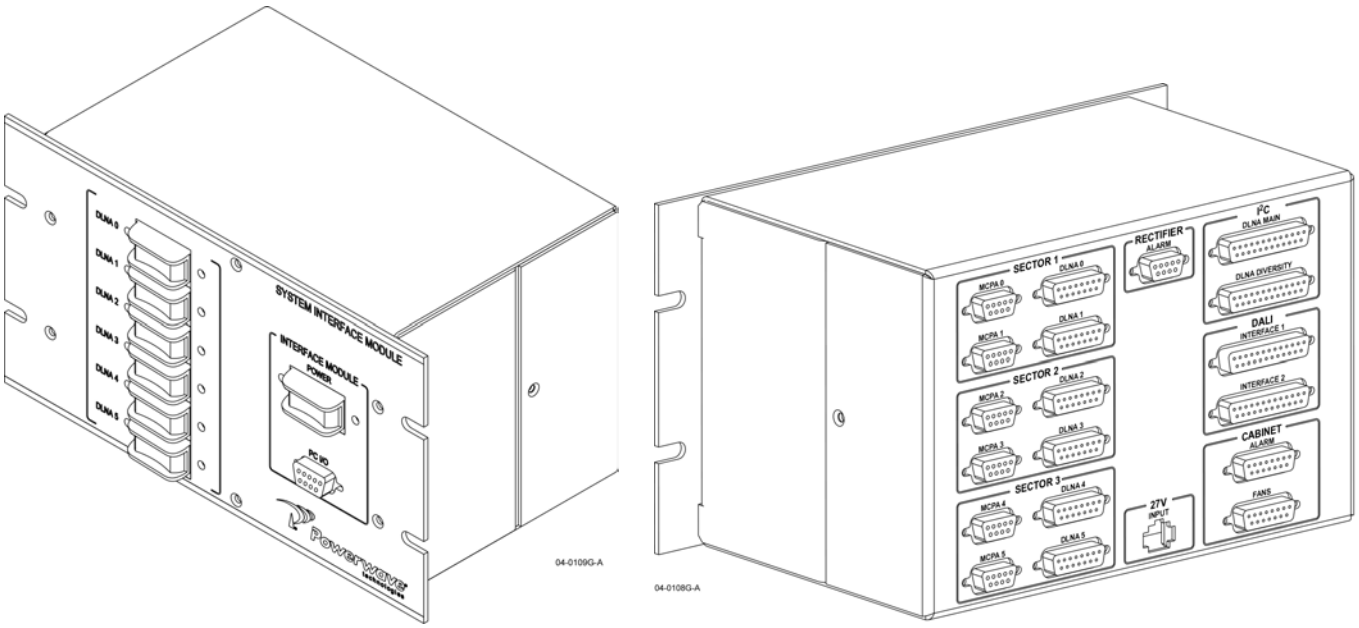

System Interface Module Front and Rear Panels

All input/output connections of the SIM are detailed below:

I/O	Description	Connector Type
J1	MCPA0 Serial Interface	DB-9F
J2	MCPA1 Serial Interface	DB-9F
J3	MCPA2 Serial Interface	DB-9F
J4	MCPA3 Serial Interface	DB-9F
J5	MCPA4 Serial Interface	DB-9F
J6	MCPA5 Serial Interface	DB-9F
J7	DLNA0 (Main) Interface	DB-15F
J8	DLNA1 (Diversity) Interface	DB-15F
J9	DLNA2 (Main) Interface	DB-15F
J10	DLNA3 (Diversity) Interface	DB-15F
J11	DLNA4 (Main) Interface	DB-15F
J12	DLNA5 (Diversity) Interface	DB-15F
J13	Rectifier Interface	DB-9M
J14	DC Input	2X2 Molex
J15	DALI1 BTS Interface	DB-25F
J16	DALI2 BTS Interface	DB-25F
J17	DLNA Main BTS Interface	DB-25F
J18	DLNA Diversity BTS Interface	DB-25F
J19	Cabinet – Intrusion and AC Fault Interface	DB-15F
J20	Cabinet – Fan Interface	DB-15F
J21	PC RS232 Interface	DB-9F

4.9.1 Amplifier Alarms - MCPA Serial Interface (J1 – J6)

The MCPA Serial Interface is accomplished via a DB9 Female connector on J1. The SIM communicates with each amplifier subrack in the cabinet via the host RS-485 interface on the MCPA subrack. RS-485 signals are daisy chained from the first subrack to the next, and so on, until the buss is terminated. The SIM is internally terminated, as are each of the amplifier subracks, to prevent loading down the RS-485 buss.

TBD alternate configuration: The MCPA Serial Interface is accomplished via six identical DB9 Female connectors. The SIM communicates with each amplifier subrack in the cabinet via the host RS-485 interface on the MCPA

subrack. The SIM is internally terminated, as are each of the amplifier subracks, to prevent loading down the RS-485 buss.

Pin #	Description	
1	RS-485 TX data +	Descriptions TX and RX are in reference to the MCPA subrack. TX refers to data in to the SIM. RX refers to data out from the SIM.
2	RS-485 TX data -	
3	RS-485 RX data +	
4	RS-485 RX data -	
5	No Connection	
6	No Connection	
7	No Connection	
8	No Connection	
9	No Connection	

Amplifier alarms are reported to the SIM via the amplifier subrack RS-485 bus. The amplifier subracks are daisy-chained on the RS-485 bus, and the alarm bus is cabled from the subrack rear panel to the front panel subrack interface panel. Each subrack has a unique address. The subrack address is set via front panel dip switches.

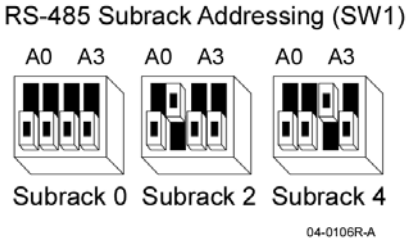

Refer to *Amplifier Monitoring* in the *MCR21929-1-2 Amplifier Subrack* section of this manual for available alarms.

4.9.2 DLNA Alarms - DLNA Interfaces (J7 – J12)

The DLNA interface is accomplished with six DB15 Female connectors. Each connection is unique and requires coordination with the DLNAs within the cabinet. Each connector provides DC power to the DLNA, differential I^2C BTS pass-through, and analog temperature signals.

DC power provides the DLNA with +27±1.0 Vdc via a 5A maximum circuit breaker on four contacts (2-source, 2-return). The circuit breaker also functions as the power switch to the DLNA.

The differential I^2C interface utilizes 6 contacts. These signals are passed-through the SIM to the BTS interface. A module detect signal is also passed through. No processing is provided or required.

A single analog voltage signal (pin 10) represents the temperature of the DLNA module. The voltage potential is with respect to the DC return. The temperature conversion factor is: 0°C = 500mV +10mV/°C.

PIN	Description	PIN	Description
1	DC Source	9	Module Detect
2	DC Source	10	Temperature Signal
3	DC Return	11	No Connection
4	DC Return	12	No Connection
5	No Connection	13	SCL-
6	SCL+	14	SDA_TX-
7	SDA_TX+	15	SDA_RX-
8	SDA_RX+		

4.9.3 Power Plant Alarms - Rectifier Interface (J13)

The Rectifier interface is accomplished through a single DB9 Male connector. This interface includes up to six individual rectifier faults. The faults signals are open collector. The signal impedances are defined as:

Low impedance signifies normal operation

High impedance signifies a fault

The open collector circuit has a 10mA limitation. The interface also includes two auxiliary TTL signals. One is an input and the other an output. The auxiliary output signal is a 74HC14 inverter output. The auxiliary signals have no function at this time.

RECT6 signal represents the alarm status of the LVD controller.

PIN	Description	PIN	Description
1	GND	6	Rectifier Fault 5
2	Rectifier Fault 1	7	Rectifier Fault 6 (LVD)
3	Rectifier Fault 2	8	Auxiliary TTL Input
4	Rectifier Fault 3	9	Auxiliary TTL Output
5	Rectifier Fault 4		

4.9.4 Cabinet Alarms

4.9.4.1 Cabinet – Intrusion / AC Fault Interface (J19)

A DB15 Female connector provides the Cabinet intrusion and AC fault interface. The intrusion inputs are contact closures from all of cabinet doors: front, rear, battery, and AC service. All *Common* contacts are tied to the system ground. The *Normally Closed* contacts are pulled-up and passed to the micro-controller. A logic high signal signifies an intrusion via an open door.

The AC power fault passes through to the DALI interface *Common* contact with reference to the BTS *COMMON1*. An open contact signifies an AC fault. The AC fault signal is not processed.

PIN	Description	PIN	Description
1	Ground	9	AC Door Common Contact
2	Front Door Normally Closed Contact	10	AC Alarm Normally Closed Contact
3	Front Door Common Contact	11	AC Alarm Common Contact
4	Rear Door Normally Closed Contact	12	No Connection
5	Rear Door Common Contact	13	No Connection
6	Battery Door Normally Closed Contact	14	No Connection
7	Battery Door Common Contact	15	No Connection
8	AC Door Normally Closed Contact		

4.9.4.2 Cabinet Fan Control and Interface (J20)

Each of the cabinet fans has a sense signal with a 50% duty cycle square wave. The frequency of the square wave signal is directly proportionate to the RPM of the fan. The speed of the fan is dependant on the applied control voltage. The rotational speed of the fan is dependent on the applied DC voltage to the control input of the fan. The control function is supported by a micro-controller.

The fan control ports will be forced to 0% PWM if the front door is sensed open. The fan status will latch to the current state and all fault times will be halted and saved. Upon the sensed door closure the fan sense routine will continue where it left off.

The temperature information is derived from:

- The DLNA temperature analog input.
- The MCPA serial interface.
- The SIM internal temperature analog input.

The highest temperature measurement among these devices determines the fan setting. All four-fan control ports function identically with each other. The PWM outputs do not increment or decrement > 1 step per minute.

If the +27V input is < 24V, the temperature thresholds increase by +10°C. If the voltage is less than 24V the battery back-up system is assumed the primary DC source and the system will operate at an accelerated temperature to reduce the current draw of the cabinet fans in an attempt to extend battery life.

PWM VS. Temperature

PWM (%)	Maximum Temperature
0	+41°C or less
15	+42°C
25	+43°C
35	+44°C
45	+45°C
55	+46°C
65	+47°C
75	+48°C
85	+49°C
100	+50°C or greater

There are three fan fault frequency thresholds related to speed control.

Fan Fault Thresholds

PWM (%)	Fan Fault Threshold
100 - 50	40Hz
49 - 20	15Hz
< 20	10Hz

Each fan sense input is measured. If the fan frequency(s) is below the threshold (for the operating mode) for a continuous period of 1-minute a fan fault is reported to the DALI interface. Any change in fan status is reported to the BTS in real-time via the I^2C interface. The fan fault on the DALI is cleared when all of the fan frequencies maintain above threshold performance for a period of 30 seconds. Alarm monitoring will halt if the fan control is 0%PWM. When this occurs, the current alarm status latches.

The cabinet fan interface is a DB15 Female connector. The interface provides fan monitor inputs, and fan control / status outputs.

The fan control circuitry provides a 0 to 10Vdc signal to adjust the fan speed.

Pin #	Description	Pin #	Description
1	Ground	9	Fan 0 Sense
2	Fan1 Sense	10	Fan 2 Sense
3	Fan3 Sense	11	I^2C Serial I/O Data
4	I^2C Serial I/O Clock	12	Ground
5	Ground	13	No Connection
6	No Connection	14	Fan 3 Speed Control
7	Fan 2 Speed Control	15	Fan 1 Speed Control
8	Fan 0 Speed Control		

4.9.4.3 RS-232 Interface (J21)

The front panel of the SIM provides a RS-232 serial communication port. The RS-232 port provides for upgrading firmware, and displaying system status and configuration. These tasks are performed via PC and interface software.

Upgrading firmware

Display all DALI alarms

Display all DLNA, MCPA and SIM temperatures in °C

Display the fan control voltage (0-10)

Display the fan speed in Hz

Pin #	Description	Pin #	Description
1	No Connection	6	No Connection
2	RS-232 TX	7	No Connection
3	RS-232 RX	8	No Connection
4	No Connection	9	No Connection
5	Ground		

4.9.5 DALI Interfaces (J15 & J16)

The two DALI interfaces are accomplished via two DB25 Female connectors. The DALI interface reports all of the cabinet alarms, excluding the DLNA alarms, to the BTS. The interface is made through Form-B contact with a reference provided by the BTS (*COMMON1* or *COMMON2*).

DALI	PIN	Signal	Description
1	1	DALI0	MCPA0_ALARM1
1	2	DALI1	MCPA0_ ALARM2
1	3	DALI2	MCPA0_ ALARM3
1	4	DALI3	MCPA2_ ALARM1
1	5	GND	Ground (Common1)
1	6	DALI4	MCPA2_ ALARM2
1	7	DALI5	MCPA2_ ALARM3
1	8	DALI6	MCPA4_ ALARM1
1	9	DALI7	MCPA4_ ALARM2
1	10	GND	Ground (Common1)
1	11	DALI8	MCPA4_ ALARM3
1	12	DALI9	RECT1
1	13	DALI10	RECT2
1	14	DALI11	RECT3
1	15	GND	Ground (Common1)
1	16	DALI12	FAN ALARM
1	17	DALI13	INTRUSION
1	18	DALI14	HI_TEMP
1	19	DALI15	LO_TEMP
1	20	GND	Ground (Common1)
1	21	DALI16	RECT4
1	22	DALI17	RECT5
1	23	DALI18	RECT6
1	24	DALI19	AC ALARM
1	25	GND	Ground (Common1)
1	26	NC	-

DALI	PIN	Signal	Description
2	1	DALI0	MCPA1_ ALARM1
2	2	DALI1	MCPA1_ ALARM2
2	3	DALI2	MCPA1_ ALARM3
2	4	DALI3	MCPA3_ ALARM1
2	5	GND	Ground (Common2)
2	6	DALI4	MCPA3_ ALARM2
2	7	DALI5	MCPA3_ ALARM3
2	8	DALI6	MCPA5_ ALARM1
2	9	DALI7	MCPA5_ ALARM2
2	10	GND	Ground (Common2)
2	11	DALI8	MCPA5_ ALARM3
2	12	DALI9	OPEN
2	13	DALI10	OPEN
2	14	DALI11	OPEN
2	15	GND	Ground (Common2)
2	16	DALI12	OPEN
2	17	DALI13	OPEN
2	18	DALI14	OPEN
2	19	DALI15	OPEN
2	20	GND	Ground (Common2)
2	21	DALI16	OPEN
2	22	DALI17	OPEN
2	23	DALI18	OPEN
2	24	DALI19	OPEN
2	25	GND	Ground (Common2)
2	26	NC	-

4.9.6 I^2C Interfaces - DLNA Main (J17) / Diversity (J18)

The two DLNA I^2C BTS interfaces are accomplished via two DB25 Female connectors. The DLNA I^2C interface is passes-through all of the DLNAs status and module detect signals to the BTS. The I^2C interfaces are full duplex and differential (6 I/Os).

I^2C	Pin	Signal	Description
1	1	SDA_RX_P	DLNA_0
1	2	SDA_RX_N	DLNA_0
1	3	SDA_TX_P	DLNA_0
1	4	SDA_TX_N	DLNA_0
1	5	SCL_P	DLNA_0
1	6	SCL_N	DLNA_0
1	7	DETECT	DLNA_0
1	8	NC	DLNA_0
1	9	GND	DLNA_0
1	10	SDA_RX_P	DLNA_2
1	11	SDA_RX_N	DLNA_2
1	12	SDA_TX_P	DLNA_2
1	13	SDA_TX_N	DLNA_2
1	14	SCL_P	DLNA_2
1	15	SCL_N	DLNA_2
1	16	DETECT	DLNA_2
1	17	NC	DLNA_2
1	18	GND	DLNA_2
1	19	SDA_RX_P	DLNA_4
1	20	SDA_RX_N	DLNA_4
1	21	SDA_TX_P	DLNA_4
1	22	SDA_TX_N	DLNA_4
1	23	SCL_P	DLNA_4
1	24	SCL_N	DLNA_4
1	25	DETECT	DLNA_4
1	26	NC	DLNA_4

I^2C	Pin	Signal	Description
2	1	SDA_RX_P	DLNA_1
2	2	SDA_RX_N	DLNA_1
2	3	SDA_TX_P	DLNA_1
2	4	SDA_TX_N	DLNA_1
2	5	SCL_P	DLNA_1
2	6	SCL_N	DLNA_1
2	7	DETECT	DLNA_1
2	8	NC	DLNA_1
2	9	GND	DLNA_1
2	10	SDA_RX_P	DLNA_3
2	11	SDA_RX_N	DLNA_3
2	12	SDA_TX_P	DLNA_3
2	13	SDA_TX_N	DLNA_3
2	14	SCL_P	DLNA_3
2	15	SCL_N	DLNA_3
2	16	DETECT	DLNA_3
2	17	NC	DLNA_3
2	18	GND	DLNA_3
2	19	SDA_RX_P	DLNA_5
2	20	SDA_RX_N	DLNA_5
2	21	SDA_TX_P	DLNA_5
2	22	SDA_TX_N	DLNA_5
2	23	SCL_P	DLNA_5
2	24	SCL_N	DLNA_5
2	25	DETECT	DLNA_5
2	26	NC	DLNA_5

5. Specifications

Note This Powerwave product is designed to operate within the Normal Operating (typical operating) ranges or conditions specified in this document. Operation of this equipment beyond the specified ranges in this document may cause (1) spurious emissions that violate regulatory rules; (2) the equipment to be automatically removed from service when maximum thresholds are exceeded; or (3) the equipment to not perform in accordance with its specifications. It is the Operator's responsibility to ensure this equipment is properly installed and operated within Powerwave operating specifications to obtain proper performance from the equipment and to comply with regulatory requirements.

Cabinet Specifications

Material	Aluminum alloy 0.12 inch (3.05 mm) thick
Finish	Non-corrosive plating
Alarms	Intrusion for all doors
Fans	1200 CFM min; 65 dBA max with doors shut; turn-off when door is opened
Electrical entry	External AC entry box with grounding bus bar; AC power filtering
Grounding	Single point grounding; Interior grounding buss; all doors and cover plates provide good electrical ground.
Door Locks	Front and Rear doors provide 3 point locking mechanisms
Door and access plate seals	UL-157 compliant
Mounting Template	Mylar plate; provided
Lock Tool	Thin-wall 7/16 inch nut driver
Cable Access Plate Tool	Keyed T-27 Torx driver
Lifting Bosses	Qty 4; 6000 lbs (2721 Kg) max weight supported with proper strapping
Wind Speed	Up to 150 MPH (241.4 Km/H)
Solar Loading	Top (100 % Area): 754 W/m^2 Front and one side (100 % Area): 754 W/m^2
Compliance	Telcordia GR-487-CORE; Bellcore GR-63-CORE
Dimensions: Footprint Overall, Doors Closed Overall, Doors Open	 34 W x 34 D inches (863.6 W x 863.6 D mm) 42.5 W x 79.5 H x 39.4 D inches (1079.5 W x 2019.3 H x 1000.8 D mm) 59 W x 79.5 H x 105 D inches (1498.6 W x 2019.3 H x 2667.0 D mm)
Weight Empty Without Amplifiers, Rectifiers and Batteries Fully Loaded	 400 lbs (181.5 Kg) 614.5 lbs (278.7 Kg) 1345 lbs (610 Kg)

G3S-1900-125 Multicarrier PCS Amplifier Functional Specifications

Frequency Range	1930-1990 MHz
Total Maximum Input Power	-4 dBm
Total Output Power	125 W typical (1 Module)
Intermodulation Distortion and In-Band Spurious:	-63 dBc (Min) @ +26 to +28 Vdc @ 125 Watts
RF Gain at 1930 MHz	60 dB
Gain Flatness:	±0.5 dB @ 27 Vdc ±1 Vdc
Gain Variation Over Temperature:	±0.5 dB from 24 to 30 Vdc
Output Protection:	Mismatch Protected
Input Port Return Loss:	-16 dB (Min)
Out of Band Spurious:	Better than -60 dBc, +24 Vdc to +28 Vdc
Duty Cycle:	Continuous
DC Input Power:	+27 Vdc ± 1 Vdc, 52 amps Typical, 60 Amps Max @ 125 Watts; Operational +21.0 Vdc to 30 Vdc
Operating Temperature:	0 ºC. to +50 ºC.
Storage Temperature:	-40 ºC. to +85 ºC.
Operating Humidity:	5 % - 95 % Relative Humidity (Noncondensing)
Storage Humidity:	5 % - 95 % Relative Humidity (Noncondensing)
RF Input / Output Connector	Radial BMA Female Blind Mate Connector
Status / Alarm / Control / DC Input Connectors:	21-Pin D-Subminiature Combo Connector
Dimensions (Including handles, rear fans):	5.22 H x 16.97 W x 20.44 D inches (132.59 H x 431.04 W x 519.18 D mm)
Weight	52 lbs (23.59 Kg)

MCR21929-1-2 Specifications

Frequency Range	1930-1990 MHz (see Pilot Tone Control section)
Power Output / Max Input w/125W modules	109 W (50.37 dBm) / 1.87 dBm (1 Module) 218 W (53.38 dBm) / 1.88 dBm (2 Modules)
Duty Cycle	Continuous
RF Gain – Standard (±0.50 dB)	48.5 dB 1 Module 51.5 dB 2 Modules
RF Gain – Constant (±0.50 dB)	48.0 dB
RF Gain Adjust	0 to 10 dB Standard operating mode 0 to 3 dB Constant Gain operation mode 0 dB when preamps are employed
Gain Variation with Voltage / Freq.	± 0.5 dB @ 26 to 28 VDC
Gain Variation over Temperature	±0.5 dB
Input Port Return Loss	13 dB (min)
Subrack Noise Figure	34.0 dB 1 Module 31.0 dB 2 Modules + Gain Adjust Attenuation value (0-10 dB)
DC Input Voltage Range	21 to 30 VDC (26 to 28 VDC for rated operation)
RF Power Derating for DC Input Voltage	28V ≤ V < 30V 0.5 dB 26V ≤ V < 28V 0.0 dB Normal operating voltage 24V ≤ V < 26V 0.5 dB 22V ≤ V < 24V 1.0 dB 21V ≤ V < 22V 1.5 dB
DC Input Current per Subrack	104 Amps Typical, 120 Amps Max (2 Modules) @ 27 ±1 VDC
Alarms (Subrack)	Minor – Fan Fail Major – One or more MCPAs Failed Critical – All MCPAs Failed
Alarm Indication	Form C Contacts, LEDs & RS-485
Operating Temperature Range	0 °C to + 50 °C, Ambient
Storage Temperature	-40 °C to + 85 °C
Operating Humidity, Normal	0% - 80% RH (Noncondensing)
Storage Humidity	0% - 100% RH (Noncondensing)
Connectors DC RF Input RF Output Alarm Outputs (Form-C) RS-485 (2), Preamp (1), and RS-232 (1)	 Strip-n-Poke (2 to 10 AWG) SMA Female 7/16 DIN Female 15-Pin D-Subminiature Female 9-Pin D-Subminiature Female
Controls	Subrack Address Subrack Operating Mode
Indicators	APC (RED)
Dimensions:	19 W x 12.17 H x 25 D inches (19 W x 12.17 H x 25 D mm)
Weight:	38 lbs. Empty; 142 lbs. Fully Loaded (17.24 Empty; 64.41 Kg Loaded)

DLNA Specifications

Electrical Characteristics			
Parameter	Limit	Unit	Remarks
Transmit (TX) Path specific			
Frequency Range	1930-1990	MHz	
Insertion Loss	1.2	dB	Max Over entire Pass band
Loss variation over temperature	0.4	dB	Any given frequency
In-Band Ripple (J1: TX to J2: Antenna Port)	0.7	dB	Max Over Temp
Input Power, Average (J1: TX)	250	W	Continuous
Peak Instantaneous Power Handling	5	kW	PIP @ an altitude of 4000 m
Rejection (J1: TX to J2: Antenna Port)	85	dB	Min over DC – 1850 MHz
Rejection (J1: TX to J2: Antenna Port)	105	dB	Min over 1850-1900 MHz
Rejection (J1: TX to J2: Antenna Port)	97	dB	Min over 1900-1910 MHz
Rejection (J1: TX to J2: Antenna Port)	45	dB	Min over 2015 – 4000 MHz
Rejection (J1: TX to J2: Antenna Port)	35	dB	Min over 4000 – 12750 MHz
Inter modulation Distortion (IMD3) in TX Band (J1: TX to J2: Antenna Port)	-80	dBc	2 tones @100W (+50dBm) / Tone at (J1: TX)
Isolation (J1: TX to J3:RX_01) or (J1:TX to J4: RX_02)	-59	dB	DC – 1910 MHz
	-34	dB	1930 – 12750 MHz
Receive (RX) Path Specific (Antenna port to LNA output port)			
Frequency Range	1850-1910	MHz	
Gain (J2: Antenna to J3: RX_01) or (J2: Antenna to J4: RX_02)	45.0+/- 0.5	dB	at Fc=1880 MHz & Room temp)
Dynamic power range:	-121 to –23	dBm	Max GMSK average power
	-121 to –26	dBm	Max EDGE average power
Input IP3	-8.0	dBm	Min. (Added filter loss)
Input P1dB	-16.0	dBm	Min. (Added filter loss)
Variable attenuation, voltage controlled	+0.0 /- 2.0	dB	via front panel potentiometer
Gain variation, over temperature	± 1.0	dB	Full Band
Gain flatness, over specified frequency range	1.7	dB	Filter ripple, Filter + LNA
Noise Figure	2.0	dB	Max at Room Temp.
	2.5	dB	Max Over Temp.
Rejection (J2: Antenna to J3: RX_01) or (J2: Antenna to J4: RX_02)	90	dBc	Min. over DC to 1720 MHz
Rejection (J2: Antenna to J3: RX_01) or (J2: Antenna to J4: RX_02)	40	dBc	Min. over 1720 to 1820 MHz
Rejection (J2: Antenna to J3: RX_01) or (J2: Antenna to J4: RX_02)	25	dBc	Min. over 1820 to 1830 MHz
Rejection (J2: Antenna to J3: RX_01) or (J2: Antenna to J4: RX_02)	0	dBc	1830 to 1850 MHz
Rejection (J2: Antenna to J3: RX_01) or (J2: Antenna to J4: RX_02)	0	dBc	Reference = 1850 to 1910 MHz
Rejection (J2: Antenna to J3: RX_01) or (J2: Antenna to J4: RX_02)	0	dBc	1910 to 1930 MHz
Rejection (J2: Antenna to J3: RX_01) or (J2: Antenna to J4: RX_02)	90	dBc	Min. over 1930 to 2050 MHz
Rejection (J2: Antenna to J3: RX_01) or (J2: Antenna to J4: RX_02)	70	dBc	Min. over 2050 to 4000 MHz
Rejection (J2: Antenna to J3: RX_01) or (J2: Antenna to J4: RX_02)	30	dBc	Min. over 4000 to 12750 MHz
Isolation (J3: RX_01) to (J4: RX_02)	15	dB	Over the specified frequency range
Gain balance	0.5	dB	Between (J3: RX_01) & (J4: RX_02)

Electrical Characteristics			
Parameter	Limit	Unit	Remarks
Inter modulation Distortion (IMD7) RX Band (J3: RX_01) to (J4: RX_02)	-110	dBc	Measured @ 1870 MHz., 2 tones @100W (+50dBm)/Tone at J2: Antenna
General Specification			
Max Input RF	-10.0	dBm	RMS power with no damage to DLNA
Input Return Loss	-18	dB	(J1: TX) 50 ohm matched.
	-18	dB	(J2: Antenna) 50 ohm matched
Supply Voltage Range	+20 to +30	Vdc	
Supply Voltage Range	27± 0.5	Vdc	Nominal
DC Current	2	A	Max.
VSWR	1.5:1		Max; Source and Load
Sample Port J5			
Frequency Range	1930~1990	MHz	
Loss (J1: TX port to J5: Sample Port)	-55±2.5	dB	Nominal
Flatness (J1: TX port to J5: Sample Port)	2.0	dB	Max
Output Return Loss (J5: Sample)	-18	dB	Max (50 ohm matched)
Mechanical			
Connector - TX port	N-type F	1	
Connector - RX Ports	SMA F	2	
Connector - Antenna Port	N-type F	1	
Connector - Sample Port	SMA F	1	
Connector - DC power & I/O	DB15	1	
Switch	Rotary 4 position	1	
LED		2	
Dimensions	16.12 L x 9.50 W x 1.75 H inches (409.12 L x 241.3 W x 44.45 H mm)		
Weight	9 KG (19.8 lbs)		

Common Environmental characteristics				
Characteristic	Test Conditions	Value		Unit
		Min	Max	
Transportation Shock	IEC 68-2-27			
Transportation Bounce	IEC 68-2-55			
Operating Altitude(Note 2)		- 152	4000	Meter AMSL
Operating Temperature Range		- 20	+85	ºC
Storage Temperature Range		- 40	+85	ºC
Operating Humidity	Non-condensing	0	95	%RH

Notes:

1. Maximum ratings represent the limits beyond which damage to the device may result. Continuous operation of the device at the maximum rating limit is prohibited.
2. Max op temp may be derated by 2 degrees C/1000 ft above 2154 meters.

System Interface Module Specifications

Operating Voltage	+27 ±0.5 VDC nominal; 20 min to 30 VDC max
Current	5 amps typical; 7.2 amps max
Operating Temperature	-40 to +80 °C
Storage Temperature	-40 to +80 °C
Humidity	5 to 95% RH, non-condensing @ 50 °C
Interface Signals	Form-B Open-Collector TTL, 5 V pull-up, 5 mA max Open-Collector Fan Sense, 5 V pull-up, 1 mA max Fan Control, 0 to 10 VDC typical, 12 VDC max RS-232 RS-485
Output Voltage	DLNA use, 21 to 27 VDC, 5 amp circuit breaker protection, 6 outputs
Dimensions	9.5 W x 5.4 D x 5.22 H inches (241.3 W x 136.91 D x 132.56 H mm)
Weight	3 lbs (1.4 Kg)

148-Amp Rectifier Model 930-00018-005 Specifications

Input Voltage	180 / 264 Vac, 47 / 63 Hz, Single phase
Input Current	25.5 Amps @ full load @180 Vac
Power Factor	0.99 typical
Inrush Current	50 Amps maximum
Harmonic Distortion	<5% total @ full load; <3% @ each harmonic
Efficiency	89% typical @ 230 Vac
Hold-Up Time	>20 ms @ low line
Output Voltage Range	+20.0 to +29.0 Vdc (set to +27.0 for Powerwave)
Line Regulation	0.5% using remote sense (5% on standby voltage)
Load Regulation	0.5% using remote sense (5% on standby voltage)
Output Ripple & Noise	< 1% P-P
Transient Response	3 % max deviation. 0.50 ms recovery time for a 25% load change
Start-Up Time	2 Seconds
Hold-Up time	>20 ms @ low line
Overshoot/Undershoot	1% at turn on/off
Temperature Coefficient	0.02% per ºC
Remote On/Off	Logic 1(TTL high) or open enables unit (on), Logic 0 (TTL low) or short shuts unit down (Off)
Power Fail Signal	Signal goes low (TTL low) 2 ms before loss of output regulation
Current Limit Protection	110-140% V1, 5VSB <2.5 amps automatic recovery
Over Voltage Protection	29.5 to 30.5 V. Reset by cycling input power
Over Temperature Protection	Automatic shutdown with auto recovery. Thermal shutdown point @ 95 ºC
MTBF	300,000 hours per Belcore standard
Output Power Good	TTL high = power good, TTL low = output out of limits
LED Indicators	DC good = green LED; temperature OK = green LED; AC good = amber LED
Operating Temperature	0 to 50 ºC @ rated output power. Supply derates linearly from 50 ºC to 65 ºC @ 2.2% per ºC
Cooling	Self contained ball bearing fan
Shock and Vibration	Per MIL STD-810F, NEBS compliant to GR 63 Core
EMI/EMC	Meets EN61000-3-2, -3 CISPR22 and FCC Part 15 Class A, Bellcore GR1089-Core
Safety Approvals	Meets UL1950, CSA 22.2 #650, TUV EN60950 and CE Mark
Dimensions	5.0 W x 16.14 D x 5.0 H inches (127.0 W x 409.96 D x 127.0 H mm)
Weight	13.5 lbs (6.12 Kg)

Specifications as provided by Cherokee International, Document Number 97MS2101M, Revision A, Aug 1, 2003

LVD Specifications

Electrical Specifications		
DC bus connection	Specification	Comments
Nominal voltage User adjustable values Factory set	 26.5V, 26.75V, 27V, 27.25V 27V	At 25°C adjustable by dip switches located on the controller board when programming signal is connected rectifier programming pins
Voltage range	20Vdc to 30Vdc	
Bus voltage monitoring Pre alarm user value range Pre alarm Factory set Battery disconnect range Factory set	 23Vdc or 25Vdc 25Vdc 21V or 22V 21Vdc	Set by dip switches on the controller
Rated bus current	600A Nominal	
Battery connections		
Number of connections	2	
Battery type (AH)	40; 60; 100; 200; 300	VRLA; Capacity set by dip switches
Temperature compensation Temperature range Slope user adjustable values Factory set	-10°C to 60°C /(14°F to 140°F) 0; -36; -48; -60 mV/K -36mV/K	Based on temperature probe when enabled Set by dip switches on the controller
Battery protection Fuse rating ranges Factory set	 70A to 600A 600A	Single blade fuse on each battery branch with auxiliary contacts
Battery Disconnect User settable voltage values Factory set Reconnect	 21V or 22V 21Vdc 24V	Set by dip switches on the controller
Battery charge current limitation; Factory set	C/10	
Environmental		
Operating temperature range	-25°C to 70°C (-13°F to 158°F)	
Max. humidity	80% non condensing	
Safety	Meets EN 60950; All components are UL approved	when mounted in an enclosed 19 inch frame
Mechanical		
Dimensions: Width x Depth x Height	19 W x 14.2 L x 5.25 H inches (482.6 W x 360 L x 133 H mm)	
Weight	15 lbs (6.8 Kg)	
Front panel	Fuse, Controller	Maintenance access
Connections		
DC Bus	Screw connection	Back of the module
Battery connection	Screw connection	Back of the module
Signals connection	Sub-D 15p female	Back of the module
Grounding	M6 stud	Back of the module

Battery Heater Specification

Operating Voltage	240 VAC
Power	400 W
Thermostat Set Points	Close at 0 ºC (32 ºF); Open at 10 ºC (50 ºF); tolerance ± 3.3 ºC (+ 6 ºF)
Maximum Surface Temperature	200 ºC (392 ºF)
Dimensions	20.5 L x 20.5 W x 0.030 H inches (521 L x 521 W x 0.76 H mm)

12 VDC 105 AH Battery Model 920-00337-003 Specifications

Cells / Volts	6 Cells / 12 Volts (DC)
Terminal Type	Threaded Copper Insert, ¼ inch
Capacity @ 77 ºF (25 ºC)	105 AH (8 hrs) to 1.75 Volts (DC) per cell
Operating Temperature	-40 ºC to +60 ºC (-40 ºF to +140 ºF)
Charging Voltage / Current	2.27 to 2.30 Volts (DC) per cell, constant voltage at a maximum current of C/4 amps
Temperature Compensation	nSubtract 3mV/ °C/cell above +25 °C or 1.7 mV/°F/cell above 77 °F nAdd 3mV/ °C below +25 °C or 1.7 mV/°F/cell below 77 °F
Storage time from a fully charged condition	6 months at 25 °C / 77 °F; for each 9 °C / 15 °F rise, reduce storage time by half
Self discharge rate	< 2% per month at 25 °C / 77 °F
AC ripple from charging source	1.5% peak to peak of float
Overall dimensions	Inches: 21.96 L x 4.86 W x 8.93 H; mm: 558 L x123 W x 227 H
Weight	90 lbs / 41 kgs

Specifications as provided by Power Battery Company, Inc., Document Number 1606-1-0310

I^2R SA120-40 AC Lightning Arrestor Specifications

Item	UOM	Specification
Tested to		IEC 61643-1
Arrester class acc. to IEC 61643-1		II
Nominal voltage (50/60 Hz)	U_N	120V
Max. continuous operating voltage	U_C	170V
Max. discharge current at wave shape I_{max} (8/20)	I_{max}	40kA
Nominal discharge current at wave shape I_n(8/20)	U_P	20kA
Voltage protection level at I_n	I_n	<850V
Response Time	t_a	<25ns
Recommended back-up fuse		160AgL/gG
Short-circuit withstand capability	I_P	60kA$_{ef}$
Recommended cross-section of connecting conductors	θ	25mm^2 (solid) 16mm^2 (flexible)
Operation temperature range	-40 to +80 ºC	
Protection type acc. to CSN EN 60529	IP 20	
Mounting on	DIN rail 35mm	
Housing's material	FRNC-UL94VO Flame Rating	
Weight	3.2 oz (90g)	
Potential free signal contact	electrical strength against surrounding circuits 3750Vef electrical strength against network circuit 3750Vef insulation resistance 2x107W max. switching current ~0,5A max. switching voltage ~250V	

Specifications as provided by Transtector, Inc., Document Number 1458-009_Rev0 (R8-11/04/02)