User's Manual

Fiber Optics

–

English

This document contains descriptions of Powerwave fiber optic units. Most sections in the document do not contain comlete information for building, installation, or commissioning systems and are therefore not allowed to be used as any kind of installation or commissioning guide. Only sections specificly declared to be installation or commissioning instructions are allowed to be used for that purpose.

Hardware and software mentioned in this document are subjected to continuous development and improvement. Consequently, there may be minor discrepancies between the information in the document and the performance or design of the products. Specifications, dimensions and other statements mentioned in this document are subject to changes without prior notice.

Powerwave and its suppliers shall not be liable for any damages related to this product, or for any other damages whatsoever caused of the use of or inability to use any Powerwave product. This is applicable even if Powerwave has been advised of the damage risk. Under any circumstances, Powerwave's entire liability shall be limited to replace such defective software or hardware which was originally purchased from Powerwave.

LinDAS is a trademark of Powerwave. Microsoft is a registered trademark of Microsoft Corporation. Windows, Windows 98, Windows NT and Windows 2000 are trademarks of Microsoft Corporation. Intel and Pentium are registered trademarks of Intel Corporation. Hayes is a registered trademark of Hayes Microcomputer Products, Inc. Other trademarks mentioned in this manual are trademarks or registered trademarks of their respective owners.

Powerwave Technologies, Inc., 1801 East St. Andrew Place, Santa Ana, CA 92705 USA
Phone: +1 714 466 1000 – Fax: +1 714 466 5800 – Internet: www.powerwave.com

This manual or parts of it may not be reproduced without the written permission of Powerwave Technologies. Infringements will be prosecuted. All rights reserved.

Copyright © Powerwave Technologies, Inc., CA 92705 USA, 1994 – 2004.

Contents

Abbreviations v

1. Safety 1-1
    - Human Exposure of RF Radiation 1-3
        - Repeater Antennas 1-3
        - Installation and Maintenance of Antenna Systems 1-3
        - Radiation Exposure 1-4
        - Radiation Safety Distances 1-4
    - Static Electricity 1-6

2. Introduction 2-1
    - Fiber Optics in General 2-2
        - Fiber Optic Transmission Versus Electrical Transmission 2-3
        - Duplex Transmission 2-4
    - System Building Blocks 2-5
        - FON, Fiber Optic Node 2-6
        - FOU, Fiber Optic Unit 2-6
        - BMU, Base Station Master Unit 2-7
        - RMU, Repeater Master Unit 2-7
        - FOR, Fiber Optic Repeater 2-7
        - OCM, Optical Converter Module 2-8
        - RH, Remote Hub 2-9

3. FON, Fiber Optic Node 3-1
    - Functional Description 3-1
        - Block Diagram 3-2
        - R2R Communication 3-4
        - Gateway Node 3-5
        - Alarm 3-5
        - Power 3-5
        - Backup Power 3-5
    - Design 3-6
        - The FON Board 3-6
        - Indicators 3-6
        - RF and Optical Ports 3-8
        - Connection Ports 3-9
    - Operational Control 3-11

4. RF Over Fiber 4-1
    - The RF Modulated Signal Paths 4-2
        - Downlink RF Signal Path 4-3
        - Uplink RF Signal Path 4-8
        - FOU, Fiber Optic Unit 4-10
        - Noise, Intermodulation and Dynamic Signal Range 4-11
    - Simplex Transmission 4-12
    - Duplex Transmission 4-13

5. IP Over Fiber 5-1
IP Network Terminology 5-2
Requirements 5-3
F-Net Characteristics 5-4
Node Units 5-5
The FON Unit Net Interfaces 5-6
Network Example 5-7

6. Commissioning 6-1
Equipment Required 6-1
Commissioning the Fiber Optic System 6-2
Master Unit Downlink Path 6-2
Slave Units 6-3
System Configuration Examples 6-6

7. Passive Devices 7-1
OSP, Optical Splitter 7-2
Graphic Symbol 7-3
Examples 7-3
WDM, Wavelength Division Multiplexer 7-4
Graphic Symbol 7-5
Example 7-5
Fiber Optic Cables 7-6
Powerwave Patch Cables 7-8
Fiber Optic Connectors 7-9
Connector Types 7-10
Handling Connectors 7-11

8. Troubleshooting 8-1

Index I-1

Questionnaire Q-1

Abbreviations

Abbreviations used in the document, in the software and in supported hardware:

3G	Third Generation mobile system.
AGC	Automatic Gain Control.
ALI	Alarm Interface (board).
ALR	Powerwave low power repeater (usually called Compact repeater).
ALT	Powerwave low power train repeater.
AMPS	Advanced Mobile Phone Service.
AR	Powerwave repeater (usually called standard repeater).
BCCH	Broadcast Control Channel.
BMU	Base station Master Unit.
BA	Booster Amplifier.
BS	Base Station.
BSA	Band Selective Amplifier (board).
BSC	Band Selective Compact repeater (board).
BSel	Band Selective repeater.
BTS	Base station Transceiver System.
CDMA	Code Division Multiple Access.
CH	Central Hub.
CHA	Channel Amplifier (board).
CMB	Combiner
CSA	CDMA/WCDMA Segment Amplifier (board).
CSel	Channel Selective repeater.
CU	Control Unit (board).
CW	Continuous Wave.
DAMPS	Digital Advanced Mobile Phone Service.
DAS	Distributed Antenna System.
DC	Directional Coupler.
DCS	Digital Communication System (same as PCN).
DFB	Distributed Feedback.
DIA	Distribution (board).
DIF	Diplex Filter.
DL	Downlink (signal direction from base station, via repeater, to mobile station).
DNS	Domain Name Server.
DMB	Digital Multimedia Broadcasting.
DPX	Duplex filter.
EEPROM	Electrical Erasable Programmable Read Only Memory.
EGSM	Extended Global System for Mobile communication.
ETACS	Extended Total Access Communication System.
ETS	European Telecommunications Standards.
F2F	Fiber to Fiber link (renamed to F-link/FLI).
FCC	Federal Communications Commission.
FLI	Fiber Link Interface.
F-link	Fiber link.
F-net	Fiber network.
FON	Fiber Optic Node.
FOR	Fiber Optic Repeater.
FOT	Fiber Optic Transceiver.
FOU	Fiber Optic Unit.
GSM	Global System for Mobile communication.
GPS	Global Position System.
HW	Hardware
ICMP	Internet Control Message Protocol.
IM	Intermodulation.
IP	Internet Protocol.
LAN	Local Area Network.
LED	Light Emitting Diode.

LinDAS	Light Indoor Distributed Antenna System.
LNA	Low Noise Amplifier (unit).
MACID	Physical address to RIA or CU board (comparable with Ethernet card MACID).
MRX	Measurement Receiver (board).
MS	Mobile Station.
MSC	Mobile Switching Center.
NAPT	Network Address and Port Translation.
NMT	Nordic Mobile Telephone (system).
NS	Name Server.
OCM	Optical Converter Module.
OM-Online	Operation and Maintenance Online.
OMS	Operation and Maintenance System.
OMT16	Operation and Maintenance Terminal (replaced with OMT32).
OMT32	Operation and Maintenance Terminal (replaced with OM-Online).
OSP	Optical Splitter.
PA	Power Amplifier (board).
PEP	Peak Envelope Power.
PCN	Personal Communication Network (same as DCS).
PCS	Personal Communication System.
PPP	Point to Point Protocol.
PSM	Power Supply Module.
PSTN	Public Switched Telephone Network.
PSU	Power Supply Unit.
PTFE	Polytetrafluoro Ethylene (Teflon).
R2R	Repeater to Repeater (Powerwave specific network).
R2R net	R2R network.
RAS	Remote Access Service.
RCC	Remote Communication Control (unit).
RCM	RF Combiner Module.
RCU	Remote Control Unit.
RF	Radio Frequency.
RH	Remote Hub.
RIA	Repeater Interface Adapter (board).
RMS	Root Mean Square.
RMU	Repeater Master Unit.
RSSI	Received Signal Strength Indication.
RTC	Real Time Clock.
RX	Receiver
SLW	Sliding Window (Powerwave specific protocol).
SW	Software
TACS	Total Access Communication System.
TDMA	Time Division Multiple Access.
TX	Transmitter
UDP	User Datagram Protocol.
UL	Uplink (signal direction from mobile station via repeater to base station).
UPS	Uninterruptible Power Supply.
VAC	Voltage Alternating Current.
VDC	Voltage Direct Current.
WAN	Wide Area Network.
WBA	Wideband Amplifier (board).
WCDMA	Wideband Code Division Multiple Access.
WCS	Wideband Coverage System.
WDM	Wavelength Division Multiplexer.
WLI	Wire Link Interface.
W-link	Wire link.
W-net	Wire network.
WRH	Wideband Radio Head.

1. Safety

In this chapter, the word ’repeater’ includes all Powerwave repeating units, such as repeaters, hubs and radio heads.

It is necessary that any personnel involved in installation, operation or service of units included in an Powerwave repeater system understand and follow the below points.

- The Powerwave repeaters are designed to receive and amplify signals from one or more base stations and retransmit the signals to one or more mobile stations. And, also to act the other way round, that is to receive signals from one or more mobile stations, amplify and retransmit the signals to the base stations. Powerwave repeater systems must be used exclusively for this purpose and nothing else.
- Units supplied from the mains must be connected to grounded outlets and in conformity with the local prescriptions.

- Power supply units supplied from the mains contain dangerous voltage that can cause electric shock. Disconnect the mains prior to any work in such a unit. Local regulations are to be followed when servicing such units.

  Authorized service personnel only are allowed to service units while the mains is connected.

- All RF transmitting units, including repeaters, will generate radio signals and thereby give rise to electromagnetic fields that may be hazardous to the health of any person who is extensively exposed close to an antenna.

  See the *Human Exposure of RF Radiation* section on page 1-3.

Beryllium oxide

- Beryllium oxide (BeO) may be contained in power devices, for instance in dummy loads in directional couplers (DCC), in combiner units (CMB), and in attenuators on the FON board. Beryllium oxide is poisonous if present as dust or smoke that can be inhaled.

  Do not file, grind, machine, or treat these parts with acid.

Hydrogen fluoride

- Coaxial cables used in many Powerwave systems have the insulation made of PTFE, polytetrafluoro ethylene, that gives off small amounts of hydrogen fluoride when heated. Hydrogen fluoride is poisonous. Do not use heating tools when stripping off coaxial cable insulation.

  No particular measures are to be taken in case of fire because the emitted concentration of hydrogen fluoride is very low.

- A lithium battery is permanently mounted in repeater CU units, and in FON and OCM units. Due to the risk of explosion, this battery must only be removed from the board by an Powerwave authorized service technician.
- NiCd batteries are mounted on the FON unit. These batteries contain environmental poisonous substances. If replaced, the old batteries should be taken care of as stated in the local prescriptions.

- The FON unit contains a class IIIb laser transmitter that emits 2 – 5mW invisible laser radiation during operation. Avoid direct exposure from unconnected laser transmitter or fiber cord as follows:
  - Do not power up the FON unit if a fiber cable is not attached to the fiber output UL port, neither if a fiber cable is attached to the port but unattached in the other end.
  - Never look in the end of a fiber cable. The 1310nm and 1550nm laser light is not visible, so no signal identification can be made anyway. Use always an instrument, such as a power meter to detect signaling.
  - Never use any kind of magnifying devices that can focus the laser light to an unprotected eye.

Human Exposure of RF Radiation

This section contains a few words about repeater antennas and prescriptions for installaton and maintenance of antenna systems. Also, it describes how to calculate safety distances needed for RF radiation at different antenna power and frequencies.

Repeater Antennas

To be able to receive and transmit signals as described in the first bulleted paragraph on page 1-1, a repeater is connected to a donor antenna directed towards the base station, and a service antenna directed towards the coverage area. A fiber optic cable from the base station might, however, be substituted for the donor antenna.

Installation and Maintenance of Antenna Systems

Installation and maintenance of all repeater antenna systems must be performed with respect to the radiation exposure limits for public areas.

The antenna radiation level is affected by the repeater output power, the antenna gain, and by transmission devices such as cables, connectors, splitters and feeders.

Have also in mind that the system minimum coupling loss, typical between 25dB and 35dB, is determined by a standard with the purpose to protect base stations from noise and other performance dropping effects.

Radiation Exposure

WHO, World Health Organization, and ICNIRP, International Commission on Non-Ionising Radiation Protection, have determined recommendations for radiation exposure.

ICNIRP recommends not to exceed the following radiation power for public exposure:

Frequency	Radiation power
900MHz	4,5W/m²
1800MHz	9,0W/m²
2100MHz	10,0W/m²

For antennas larger than 20cm the maximum radiation power can be calculated by using the following formula:

$$S = \frac{P}{4 \Delta \phi \Delta r^2}$$

where

S = Radiation power in W/m².
P = Output power in W.
r = Distance between antenna and human in meter.

To tackle the worst case successfully, the calculation does not consider system power reducing actions, such as power control and DTX.

Figure 1-1 shows the safety distance to an antenna due to the RF radiation. The distance is depending on the antenna output power and frequency, which is illustrated with two graphs in the figure.

One of the graphs applies to 4.5W/m^2 (900MHz) and the other to 9.0W/m^2 (1800MHz) or 10.0W/m^2 (2100MHz).

The safety distance range in Figure 1-1 is 0 to 1.4 meter that covers an antenna power range of 10dBm to 50dBm (0.01W to 100W).

Radiation Safety Distances

This section illustrates the safety distances to the antennas for some typical repeater configurations.

Outdoor GSM 900MHz

Repeater output power	+33dBm
Feeder loss	–5dB
Antenna gain	+17dBi
EIRP	+45dBm

The safety distance can be read to 0.75 meter in Figure 1-1 as the maximum radiation power is 4.5W/m² for 900MHz.

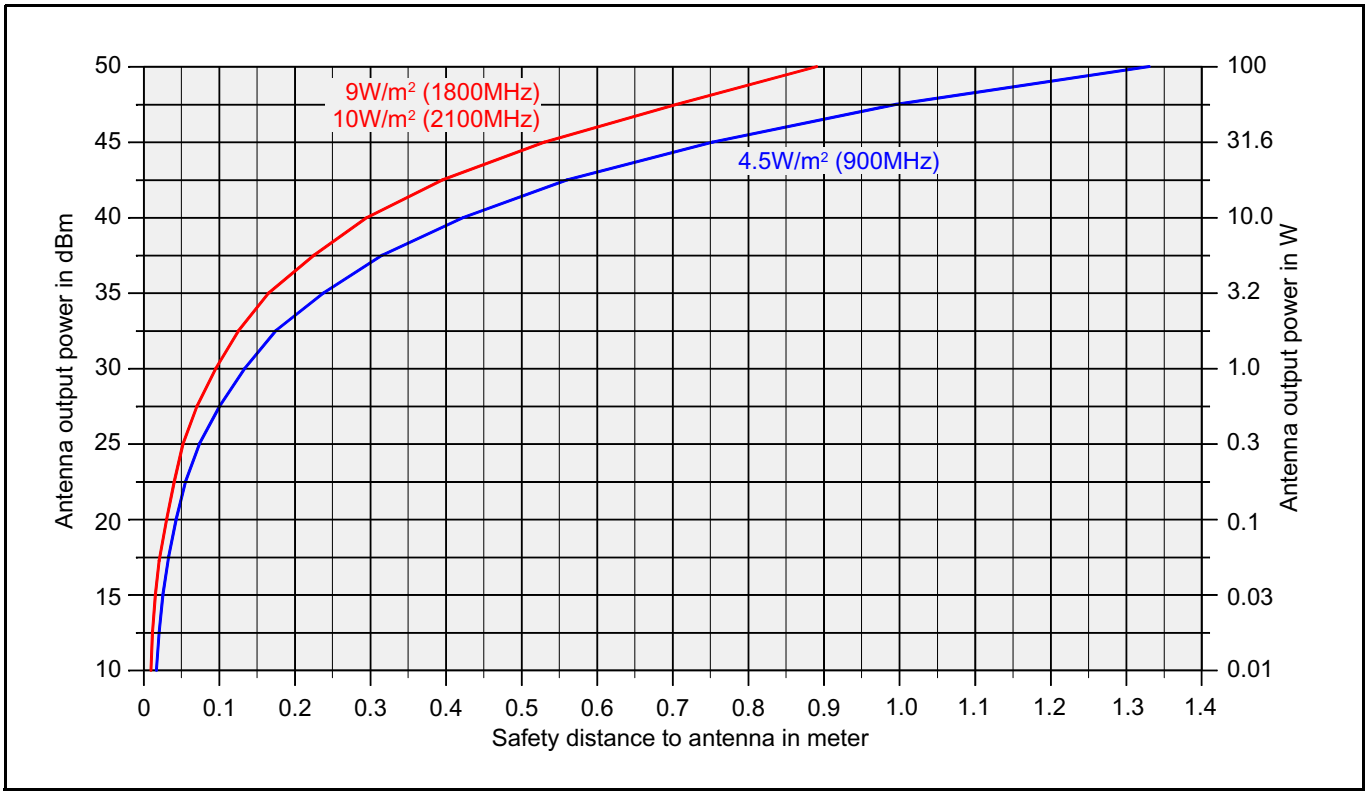

Figure 1-1. Safety distance to active antenna

Indoor GSM 900MHz

Repeater output power	+22dBm
Feeder loss	–5dB
Antenna gain	+1dBi
EIRP	+18dBm

The safety distance can be read to 0.035 meter for 4.5W/m² (900MHz).

Outdoor UMTS Standard High Power

Repeater output power	+38dBm
Feeder loss	–5dB
Antenna gain	+17dBi
EIRP	+50dBm

The safety distance can be read to 0.9 meter for 10W/m² (2100MHz).

Indoor UMTS

Repeater output power	+24dBm
Feeder loss	–5dB
Antenna gain	+3dBi
EIRP	+22dBm

The safety distance can be read to 0.035 meter for 10W/m² (2100MHz).

Static Electricity

Static electricity means no risk of personal injury but it can severely damage essential parts of the equipment, if not handled carefully.

Parts on the printed circuit boards as well as other parts in the equipment are sensitive to electrostatic discharge.

Never touch the printed circuit boards or uninsulated conductor surfaces unless absolutely necessary.

If you must handle the printed circuit boards or uninsulated conductor surfaces, use ESD protective equipment, or first touch the chassis with your hand and then do not move your feet on the floor.

Never let your clothes touch printed circuit boards or uninsulated conductor surfaces.

Always store printed circuit boards in ESD-safe bags.

Industry Canada:

The Manufacturer's rated output power of this equipment is for single carrier operation. For situations when multiple carrier signals are present, the rating would have to be reduced by 3.5 dB, especially where the output signal is re-radiated and can cause interference to adjacent band users. This power reduction is to be by means of input power or gain reduction and not by an attenuator at the output of the device.

Utfärdare/Issued by	Dattum/Date	Godkänd/Approved	Dok nr/Doc no	Rev	Sida/Page
Product Management	2005-01-18	SYKLK	RH340000/001-201	A	
Dok namn/Doc name			Fil/file		
PRELIMINARY PRODUCT SPECIFICATION			RH340000_100_A		

Wide band Radio Head

Dual band GSM 850 / GSM 1900 MHz

Product Number: RH340000/100

Electrical specification (typical values)

Applicable standards:

Radio Transmission and Reception

- FCC Rule 24 (1900 MHz)
- FCC Rule Parts 22 (850 MHz)

Electromagnetic Compatibility

- ETS 301 489-7 and applicable parts FCC Rule Parts 22 &24

Environmental

- ETS 300 019-2-4

Electrical specification

Frequency band		
Frequency band UL 800	824 – 849	MHz
Frequency band DL 800	869 – 894	MHz
Frequency band UL 1900	1850 – 1910	MHz
Frequency band DL 1900	1930 – 1990	MHz
Gain, Nominal	32	dB
Gain adjustment range	> 30	dB
Gain step resolution	0,5	dB
Gain variation within each relevant band	<2	dB
Group delay	<200	ns
EVM (TDMA/EDGE)	< 5	%
Noise figure UL at max gain (excl. fiber), 25° Cº	< 5	dB
Receiver input port return loss	14	dB
System characteristics		
System Fiber optical loss	< 10	dB
System Fiber optical link length	20	km
System input power range	+10 to +40 dBm	

Power supply

Power supply voltage	115 - 230	V AC
Power supply voltage DC (optional)	21 - 60	V DC
Power consumption max	210	W

Environmental

Temperature range	-13 to + 131	°F
	-25 to + 55	°C
Casing class	NEMA4/IP65	

Mechanical

Dimensions. (W x H x D)	17.4 x 20.9 x 7,7	Inches
	440 x 530 x 195	mm
Weight	50	lbs
	22,5	Kg
RF-connectors	N-type female	

System output power (dBm/carrier)

No of Carriers	GSM 850	GSM 1900
8	22 dBm	22 dBm
16	20 dBm	20 dBm

Maximum Rated Mean Output Power = 2.7W

Nominal Bandwidth, 869-894 MHz = 25 MHz

Nominal Bandwidth, 1930-1990 MHz = 15 MHz

RF Input and Output Impedance = 50 Ohms

2. Introduction

The first official demonstration of the fiber optics technology took place at the British Royal Society in London, 1870. It was given by natural philosopher John Tyndall. He used a container with a spout and water. As the water poured through the spout, the light from the inside of the container followed the curved water path.

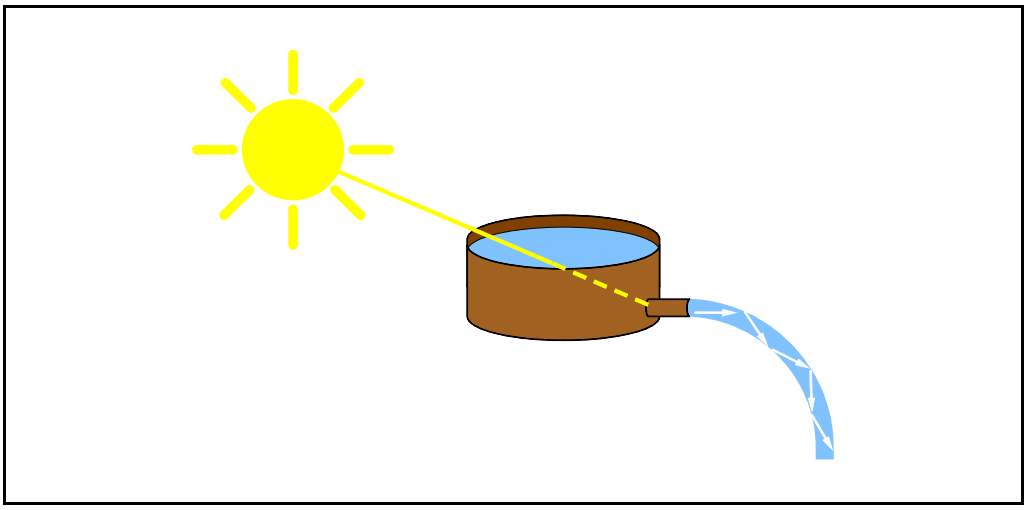

Figure 2-1. John Tyndall's first guided light transmission

This demonstation was the first research into guided light transmission.

Ten years later, in 1880, William Wheeling patented a method to transfer light in tubes, 'piping light' through plumbing. However, this never took off because Edison invented the light bulb.

Alexander Graham Bell was, about the same time, the first ever to arrange an optical amplitude modulated transmission over 200m. This was, however, achieved by emitting light beams in free space. Graham Bell's idea was not to use wire for telephone communication.

In the decade around 1950, the first practical all-glass fibers was developed which gave a success to the technology. It was Brian O'Brien at the American Optical Company and Narinder Kapany at the Imperial College of Science and Technology in London who was first to practically use an image-transmitting fiber-scope. Narinder Kapany was the man who coined the term 'fiber optics' in 1956.

Since that time, the laser and then the semiconductor laser have been very important inventions making the technology to grow increasingly and also become a fascinating and mysterious industry, where much of the technology has been isolated from outsiders.

This manual is an attempt to open the curtain for a small area of this technology – fiber optic transmission between repeaters.

Fiber Optics in General

In the beginning, when fiber optics became in practical use, a 'first window' with a wavelength of 850nm was used. It had a loss of approximately 3dB/km.

As the technology developed, the 'second window' at 1300nm became more attractive because of the lower loss, below 1dB/km.

Today, the 'third window' at 1550nm is the most attractive wavelength with a loss of 0.2dB/km for silica-based fibers.

The 'second window' at 1300nm can today, with silica-based fibers, achieve a loss of only 0.35dB/km.

The following figure illustrates the three 'windows' where the loss is low over the usable wavelength range.

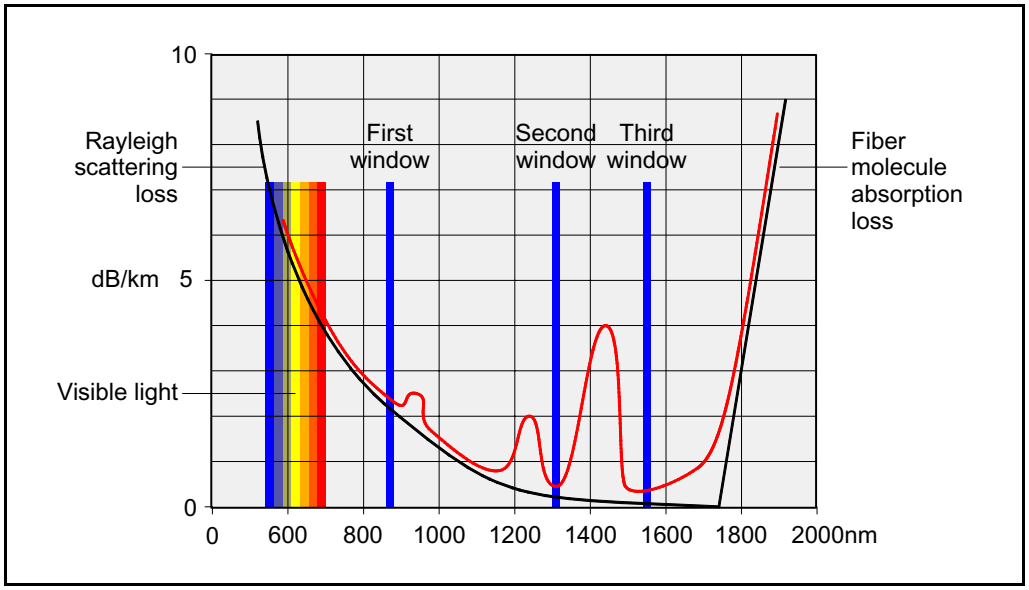

Figure 2-2. The three wavelength windows

Figure 2-2 illustrates the losses for the three wavelengt windows, with silica-based fibers.

The large absorption peaks in the diagram are caused mainly by moisture in the fiber, and by scattering at shorter wavlengths.

Figure 2-2 also shows the visible light wavelegth band, the loss curve caused by Rayleigh scattering at shorter wavelengths, and the loss curve caused by fiber molecule absorption at longer wavelengths.

The wavelengts used by the FON boards in the repeaters are within the second window (1310nm) and the third window (1550nm).

Fiber Optic Transmission Versus Electrical Transmission

This section points out some differences between fiber optic transmission and electrical transmission via copper. The most signficant differences are loss, bandwidth, electromagnetic interference, security, signal quality, and weight.

Low loss per km

In general, optical transmission over fiber offers the lowest propagation loss but also more complexity. It also adds conversion loss for electrical-to-optical signal conversion, and conversion loss the other way round.

This means that there is a break-even distance due to the propagation loss, where fiber optics starts to be more cost-effective.

For repeater usage, the following suggestion can be applicable:

For a distance shorter than 100m, use coaxial cable.
For a distance between 100m and 1000m, let the situation determine.
For a distance longer than 1000m, use fiber optics.

High bandwidth

High bandwidth is an advantage for fiber optics. It has a higher bandwidth than any other alternative (the immense potential bandwidth of 1tHz, that is 10^{12}Hz).

High bandwidth makes fiber optics become more and more common even on short distances as the Internet and other types of data communication demand high bandwidths. This makes fiber optic parts more and more common, which in the long run decreases the break-even distance for fiber optics usage.

No electromagnetic (EM) interference

As fiber consists of a non-conductive material, it is unaffected by all EM radiation.

Security

For the same reason that fiber is immune to EM radiation, it does not emit any EM radiation that can be detected.

High signal quality

Because of the immunity to EM radiation, high bandwidth, and low loss, the signal quality can be considerably better for fiber optic transmission than for electric transmission in copper.

Low weight

A copper cable usually has a weight of ten times that of a fiber cable.

Duplex Transmission

Full duplex transmission can be performed in a single fiber by transmitting one wavelength in one direction and another wavelength in the reverse direction. A wavelength division multiplexer (WDM) in each end separates the signals to an optical transmitter and an optical receiver.

This is further described in Chapter 7, *Passive Devices*.

System Building Blocks

This section contains short descriptions of the Powerwave fiber optic building blocks listed below.

Building modules

- FON, Fiber Optic Node, page 2-6.
- FOU, Fiber Optic Unit, page 2-6.

Repeater units

- BMU, Base Station Master Unit, page 2-7.
- RMU, Repeater Master Unit, page 2-7.
- FOR, Fiber Optic Repeater, page 2-7.
- OCM, Optical Converter Module, page 2-8.
- RH, Remote Hub, page 2-9.

FON, Fiber Optic Node

The FON unit is the heart of all Powerwave fiber optic repeater systems. The FON unit contains an optical transmitter and an optical receiver. No other Powerwave repeater building block has these facilities.

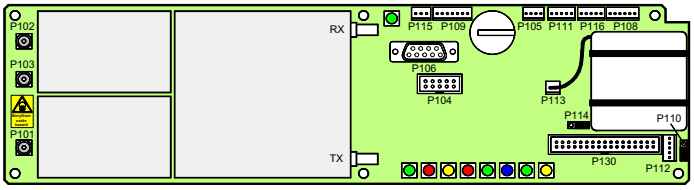

Figure 2-3. The FON unit

This unit is normally part of the FOU, Fiber Optic Unit.

The FON unit is detailed in Chapter 3, *FON, Fiber Optic Node*.

FOU, Fiber Optic Unit

The FOU, Fiber Optic Unit, is a complete unit for fiber optic interconnection of two or more repeaters. It is built up on a flanged plate and can be inserted in all types of LGP Allgon AR repeaters. In the simpliest configuration, it contains a FON board and a DPX filter.

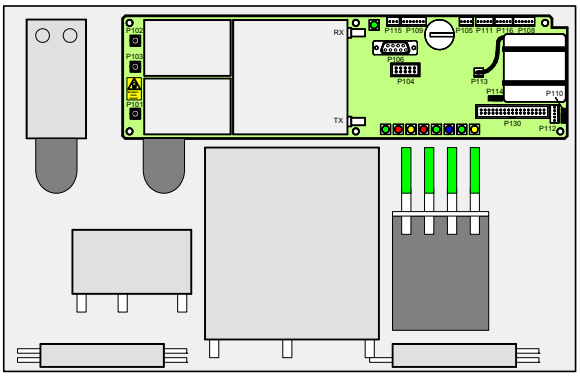

Figure 2-4. The FOU unit

Figure 2-4 shows an example of the FOU with a typical configuration. Both RF and optical devices, such as DPX filters, RF combiners, optical splitters and WDMs, can be configured on the FOU plate. The FON board is always included in the FOU.

The FOU is also described in the *FOU, Fiber Optic Unit* section in Chapter 4.

BMU, Base Station Master Unit

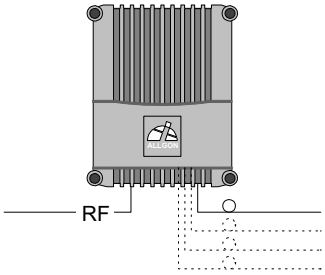

A BMU is an RF repeater type equipped with a FOU that gives the repeater ability to transmit and receive optical signals on the service side.

The BMU has an RF port for BTS connection and up to four fiber optic ports that can be connected to FORs.

By configuring the FOU with WDMs and OSPs, up to approximately four FORs can be fed in parallel by a BMU via double or single fiber communication. Up to approximately eight FORs can be fed with a high cover and two FOUs.

The BMU is described, with all included sub units, block diagram, and mechanical design, in the VD203 66/EN, *AR Repeaters, User's Manual*.

RMU, Repeater Master Unit

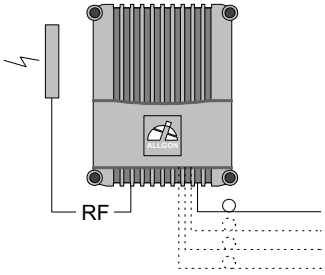

An RMU is an RF repeater type equipped with an FOU that gives the repeater ability to transmit and receive optical signals on the service side.

The RMU has an RF port for a donor antenna and up to four fiber optic ports that can be connected to FORs.

By configuring the FOU with WDMs and OSPs, up to four FORs can be fed in parallel by a BMU via double or single fiber communication. Up to eight FORs can be fed with a high cover and two FOUs.

The RMU is described, with all included sub units, block diagram, and mechanical design, in the VD203 66/EN, *AR Repeaters, User's Manual*.

FOR, Fiber Optic Repeater

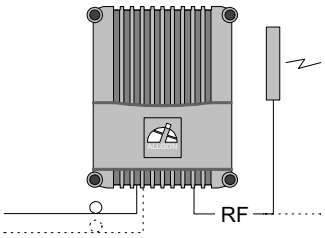

A FOR is an RF repeater type equipped with an FOU that gives the repeater ability to transmit and receive optical signals on the donor side.

The FOR has a fiber optic donor port and an RF port for a service antenna.

By configuring the FOU with a splitter, another FOR can be optically connected to the same RF system.

The FOR can be connected to a BMU or RMU.

The FOR is described, with all included sub units, block diagram, and mechanical design, in the VD203 66/EN, *AR Repeaters, User's Manual*.

OCM, Optical Converter Module

The OCM is, principally, an indoor rack mounted BMU with several channels for different bands, systems, and operators.

The front view of the OCM is shown in Figure 2-5.

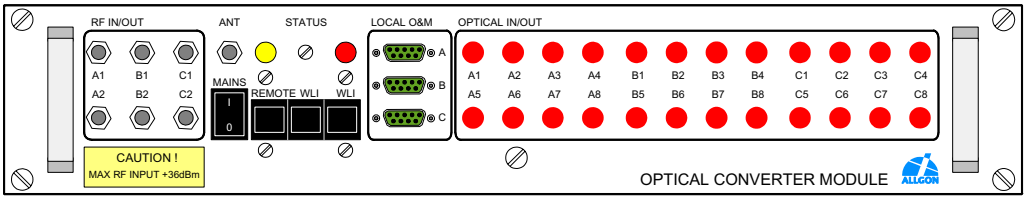

Figure 2-5. OCM, Optical Converter Module

The OCM can contain up to three FON boards, and a large number of splitter configurations.

The OCM is designed to work with an RCM, RF Combiner Module, in a DAS concept, see Figure 2-6.

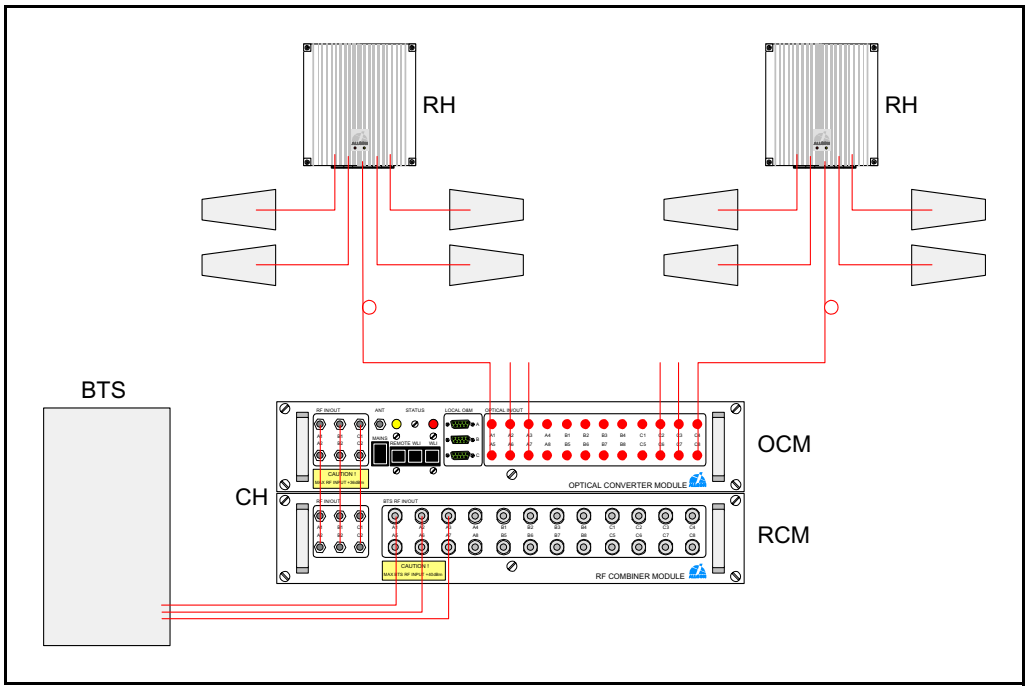

Figure 2-6. The concept of DAS

System, installation, and commissioning descriptions of the OCM are found in the VD205 03/EN, *LinDAS, Installation Guide*.

RH, Remote Hub

The RH is, principially, a FOR unit in a compact cabinet. The RH unit has, however, no FOU but the FON board is mounted directly in the cabinet.

The RH is used in DAS systems. The front view of the RH is shown in Figure 2-7.

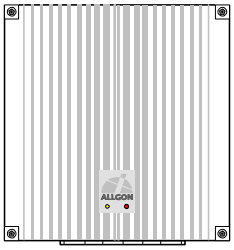

Figure 2-7. RH, Remote Hub

Figure 2-8 shows a Remote Hub cabinet inside with fiber optic cables from the OCM.

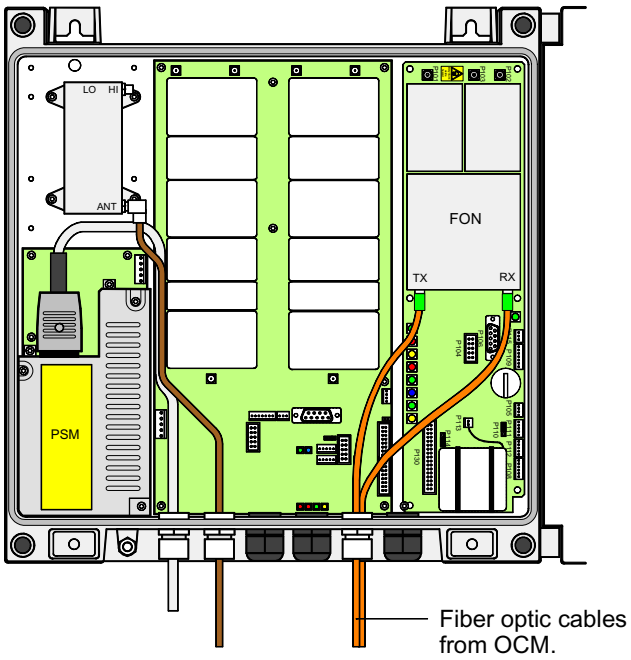

Figure 2-8. Remote hub donor fiber connection

Installation and commissioning descriptions of the RH are found in the VD205 03/EN, *LinDAS, Installation Guide*.

3. FON, Fiber Optic Node

This chapter describes the functionality, the design, and the operational control of the FON unit.

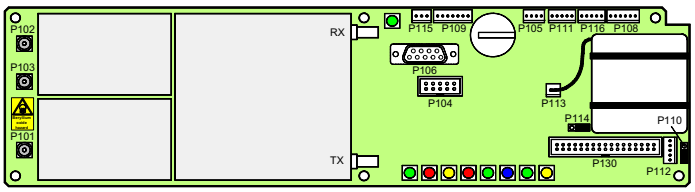

Figure 3-1. The FON unit

A description of RF transmission over fiber using the FON unit is found in Chapter 4, *RF Over Fiber*. A description of IP network using the FON unit is found in Chapter 5, *IP Over Fiber*.

Functional Description

The Fiber Optic Node, FON, is a bi-directional electrical/optical signal converter and a node in either a wire network or a fiber network. It has also functionality for:

- Electrical and optical signal supervision.
- Internal and external alarm handling.
- RS232 interface for local PC control via an O&M software (OM-Online).
- Remote control via an O&M software (OM-Online or OMS).
- Interface for RCC.
- Interface for WLI, wire network.
- Interface for FLI, fiber optic network.
- Battery backup with charger.

The FON unit can be installed in all Powerwave repeaters, remote hubs, and radio heads.

This section contains a description of the FON unit, including block diagram, RF paths, IP path, R2R communication, FON as gateway node, alarm handling, power, and backup power.

Block Diagram

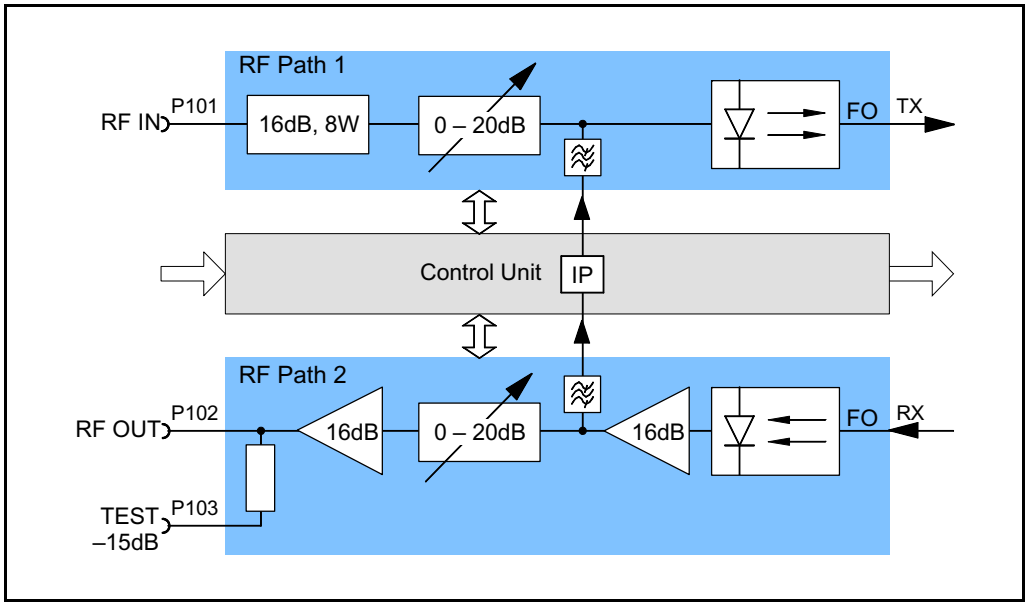

Figure 3-2. FON block diagram

Figure 3-2 shows a block diagram of the FON unit. The downlink and uplink RF signal paths are described below.

The control unit block contains circuitry and software for control of the RF paths, local and remote communication with O&M software, protocols for IP and R2R networks, internal and external alarm handling, power supervision, etc.

The control unit has a number of input and output ports not shown in the block diagram. These ports are described in the *Connection Ports* section on page 3-9.

RF Path 1

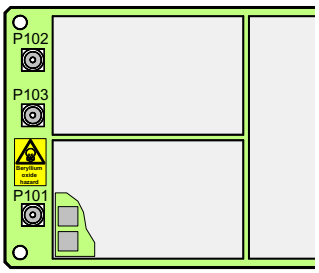

The RF IN port (P101) is usually connected to BTS/DL in a BMU (Base station Master Unit), or to the UL amplifier in a FOR (Fiber Optic Repeater). The input frequency is 800 – 2200MHz and the input power 10 – 36dBm.

The first attenuator is a 16dB, 8W power device that is a security attenuator for the FON unit. It consists of two attenuators located under the shield, see the figure. There is a FON type without these input attenuators intended for specific configurations (described in the *Uplink RF Signal Path* section in Chapter 4).

After the attenuator there is a software adjustable 0 – 20dB attenuator, manually set by the operator via O&M software. This attenuator is correctly set when the input power to the optical transmitter is 0dBm (examples are found in Chapter 6, *Commissioning*).

The optical transmitter converts the electrical RF modulated signal to a 1310 or 1550nm optical RF modulated signal and injects it into a fiber for transmission to one or more fiber optic receivers. The output signal power is 2 – 5dBm, or 0.5 – 2dBm at low power (NF: 30 – 35dB and IP_3: 30 – 35dBm).

The IP_3 is: 68dBm for channel selective repeater with 2 channels.
65dBm for channel selective repeater with 4 channels.
54dBm for band selective repeater.

RF Path 2

An optical 1310 or 1550nm input signal is received by an optical receiver. The power range for this input is between –15dBm and 1dBm optical power. To avoid receiver saturation, it should be less than 1dBm.

After converting the optical RF modulated signal to an electrical RF modulated signal, it is amplified in two 16dB amplifier stages with a noise figure of 4dB each.

Between the two 16dB amplifiers there is a software adjustable 0 – 20dB attenuator, manually set by the operator via O&M software. This attenuator is differently set depending on the FON usage.

- If the FON unit is part of a BMU, then it is adjusted to an uplink gain that is dependent on the ratio of the BTS and the repeater coverage areas.
- If the FON unit is part of a FOR, then it should be adjusted to match the repeater input amplifier power range.

Examples of this are found in Chapter 6, *Commissioning*.

The RF OUT port (P102) is usually connected to BTS/UL in a BMU, or to the DL amplifier in a FOR. The output power can be between 0dBm and 20dBm with a minimum noise (above the thermal noise) of 22dB.

There is also an RF test output (P103) with an output level of 15dB below the RF OUT level. This output is intended for signal measurement without disconnecting the RF cable.

IP Path

The IP communication circuitry is located in the control unit.

The subcarrier from the control unit is fed, via a filter, to the RF path before the optical transmitter, see Figure 3-2. In the connection point, the subcarrier is added to the RF signal. In the following optical transmitter, the RF signal with the added subcarrier is converted to an optical signal and transmitted to the connected optical receiver or receivers.

A received optical RF signal with an added subcarrier is converted to an electrical signal in the optical receiver. After the first amplifier, the subcarrier passes a filter and is then fed to the IP circuitry input in the control unit.

The subcarrier signal takes no power from the optical RF transmission.

R2R Communication

This section describes how to use the FON unit in R2R networks. The R2R network itself, its configuration, and R2R statistics are further described in the VM100 01/EN, *OM-Online, User's Manual*.

The R2R (Repeater to Repeater) network is an old Powerwave specific WLI network with SLW protocol and wire interconnection (W-net).

WLI stands for Wire Link Interface, W-net for Wire network.

SLW (Sliding Window) is an Powerwave specific protocol developed for the R2R network.

The IP network can be used in fiber networks as well as in wire networks. However, the IP wire network and the R2R wire network have different protocols and can, for this reason, not communicate with each other.

R2R network characteristics

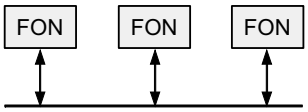

The R2R uses a twisted pair or RS-485 bi-directional bus with a master unit and slave units. The bus is connected to the FON boards via the WLI ports, see the *Connection Ports* section on page 3-10.

An example of an R2R network with four FON nodes is shown in Figure 3-3.

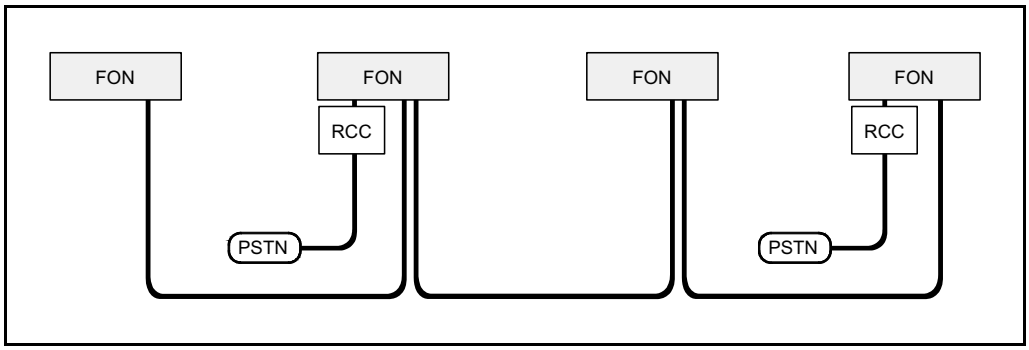

Figure 3-3. R2R network with four FON nodes

Gateway

The R2R network can contain maximum 12 nodes. One or several of these nodes can be gateway nodes, that is to be able to communicate remotely with an O&M software via modem. A description of the FON unit as gateway is found in the *Gateway Node* section on page 3-5.

The R2R network in Figure 3-3 contains two gateway nodes (connected to the PSTN).

Control station

All nodes in an R2R network can, and should, be configured with *Control Station Capability* enabled, which means that they can be the master unit if the current master unit ceases to work.

Gateway Node

A FON unit can be used as a network gateway node for IP networks as well as for R2R networks by being connected to an RCC (Remote Communication Control) unit, see Figure 3-3.

The RCC unit is connected to the FON board via the RCC port, see the *Connection Ports* section on page 3-10.

Both the FON unit and the RCC unit can be installed in all Powerwave repeaters and remote hubs.

The gateway node in various repeater types is further detailed in the VM100 01/EN, *OM-Online, User's Manual*.

Alarm

The FON unit has the same alarm and event handling as the Powerwave repeaters and remote hubs. Consequently, the entire *Alarms and Events* chapter in the VM100 01/EN, *OM-Online, User's Manual* is applicable also for the FON unit.

This includes also the four external alarms that are connected to the FON board via the Alarm port, see the *Connection Ports* section on page 3-9.

Power

The FON unit requires 6.0 –8.0V power supply. All Powerwave repeaters and remote hubs have a 7V DC power supply that is used for this purpose. This power is connected to the FON board via the Power port, see the *Connection Ports* section on page 3-9.

Backup Power

If a power failure occurs, a backup battery has capacity to supply the FON control unit with the network for up to30 minutes at room temperature. This time is intended for alarm transmission.

Design

This section describes the FON board layout, including indicators, coaxial ports, optical ports, connectors, and jumpers.

The FON Board

The FON board is built up on a printed circuit board that also contains the battery backup. The FON board is shown in Figure 3-4.

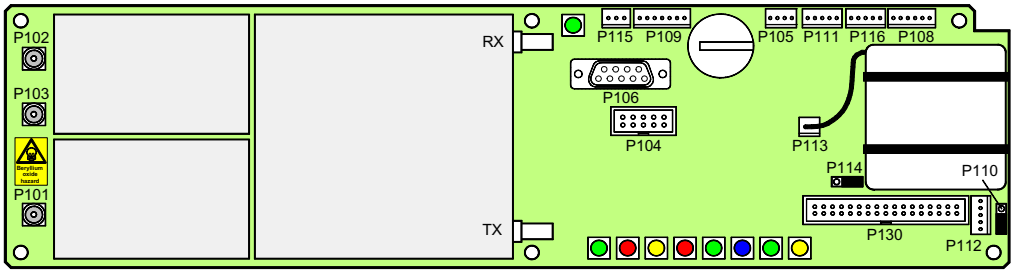

Figure 3-4. The FON board

Indicators

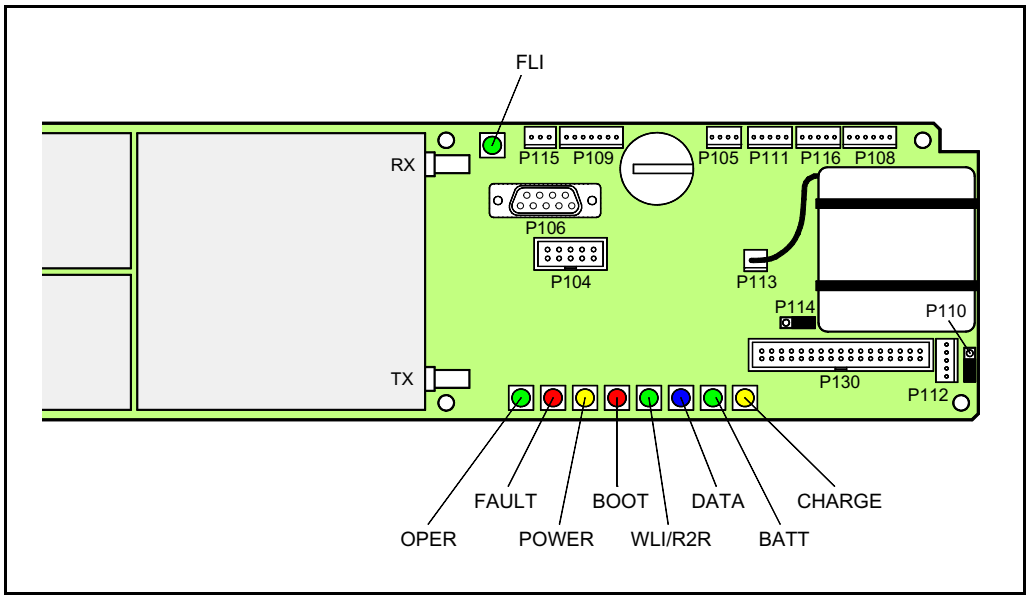

Figure 3-5. FON indicators and ports

The FON board contains the below described LED indicators.

FLI (or F2F) fiber network

Green LED that indicates, with a flashing light, that the unit receives data over the sub carrier. A steady light indicates that the unit does not currently receive any data, or there is no other node in the network.

OPER

Green LED that lights up approximately 15 seconds after the mains is switched on. It shows, with a steady light, that the unit is ready for operation.

FAULT

Red LED that flashes 15 – 20 seconds after the mains is switched on. Then, it flashes for less serious alarms (*Error*) and is lit with a steady light for fatal alarms (*Critical*).

POWER

Yellow LED that indicates present power. It is lit with a steady light after the mains is switched on.

BOOT

Red LED that is lit with a steady light when the control unit boots, that is for 10 – 15 seconds after the mains is switched on. Then, it flashes for the next 5 – 10 seconds. After that, if no error is detected, the LED is off.

If an error occur, then the LED is lit.

WLI (or R2R) wire network

Green LED that indicates, with a flashing light, that the unit is receiving data over the sub carrier. A steady light indicates one of the following three states: The unit is currently not receiving any data. The unit is currently not a *Control station*. Or, there is no other node in the network.

DATA

Blue LED that indicates data transmission in the W-net.

BATT

Green LED that indicates, with a steady light, that the battery pack currently is used as power source.

CHARGE

Yellow LED that indicates battery charge with a steady light.

RF and Optical Ports

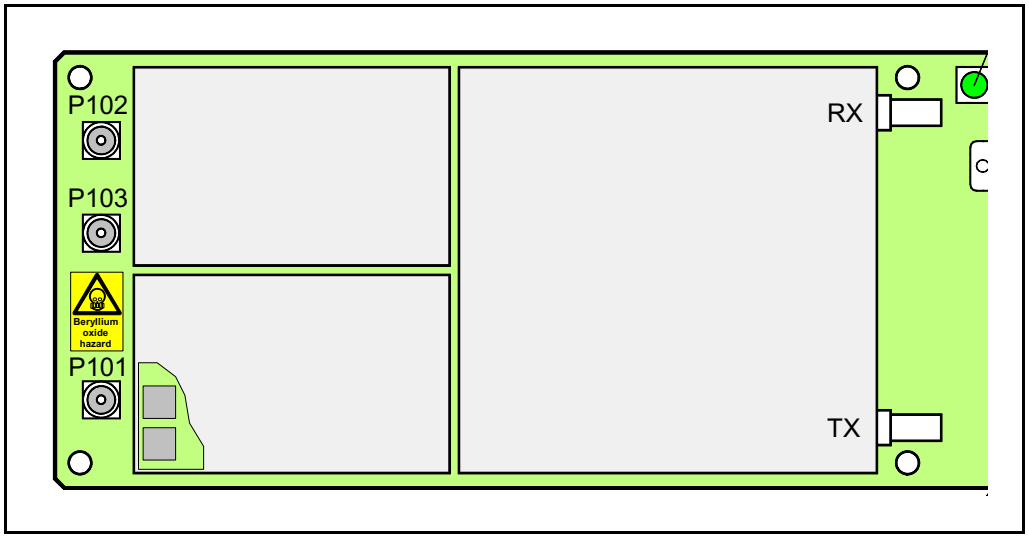

Figure 3-6. RF and optical ports

The FON board has three coaxial ports and two optical ports for the downlink and uplink RF signal. The following table shows the port numbers, connector types, and the port usages.

Port	Type	Description
P101	SMA	Electrical RF input port (to the optical TX port).
P102	SMA	Electrical RF output port (from the optical RX port).
P103	SMA	Electrical RF output port (15dB below the P102 port).
RX	DIN/APC	Optical input port (to the P102 and P103 RF ports).
TX	DIN/APC	Optical output port (from the P101 RF port).

Beryllium oxide

Caution

There are two power attenuators at the P101 port (under the shield) on the FON board, see Figure 3-6. These may contain beryllium oxide (BeO), which is poisonous. See Chapter 1, *Safety*.

Connection Ports

Except for the downlink and uplink RF ports, the FON board contains the below described connection ports.

P104 – Debug

This port is used only for development and debugging.

P105 – Front LED indicators

P105 is a 4 pole male connector used for the yellow and red LED indicators located on the front cabinet door.

P106 – PC

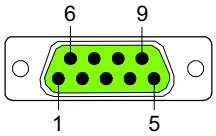

P106 is a 9 pole D-sub female RS-232 port used for local PC communication.

This port has the following pinning:

Pin 1 Not used (GND).
Pin 2 Data from FON to PC.
Pin 3 Data from PC to FON.
Pin 4 DTR from PC to FON.
Pin 5 GND
Pin 6 DSR from FON to PC.
Pin 7 RTS from PC to FON.
Pin 8 CTS from FON to PC.

P108 and P116 – Power

Power and alarm ports for the FON board.

P108 and P116 are 6 pole male connectors used for providing the FON board with power. P108 and P116 are connected in parallel for cascade connection or single use.

These ports have the following pinning:

Pin 1 +7V in.
Pin 2 +7V backup out (controlled by P114).
Pin 3 Alarm output.
Pin 4 GND
Pin 5 Not used.
Pin 6 GND.

P109 – Alarm

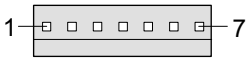

P109 is a 7 pole male alarm connector used for external alarm sensors.

This port has the following pinning:

Pin 1 AIC Ground.
Pin 2 AIC Ground.
Pin 3 AI1 External alarm input 1 – EAL1.
Pin 4 AI2 External alarm input 2 – EAL2.
Pin 5 AI3 External alarm input 3 – EAL3.
Pin 6 AI4 External alarm input 4 – EAL4.
Pin 7 Not used.

P110 – W-link jumper

This jumper is used to terminate units in a W-link. It has to be set in the parking state for all units except for the first and last units in a W-link.

Parking state is shown in the figure (the pins farest away from the battery pack interconnected).

The opposite state terminates the W-link.

P111, P112 – WLI ports

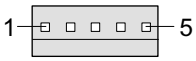

P111 and P112 are 5 pole male connectors used for interconnecting nodes in WLI-nets (IP or R2R networks).

P111 and P112 are identical and connected in parallel. One of the connectors are intended to be used from the previous node, and the other connector to the next node in the network. Either of P111 or P112 can be used for the first and the last unit in the net chain.

P113 – Batteries

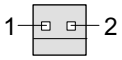

P113 is a 2 pole male connector used for the on-board backup batteries.

P114 – Backup power output

This jumper sets the backup power output state. The OFF state is shown in the figure (the pins closest to the battery pack interconnected).

This jumper has to be in the OFF state when used in an OCM unit. Otherwise, it shall be in the ON state (opposite to the figure).

P115 – Future port

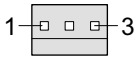

P115 is a 3 pole male connector intended for future use (not used for the time being).

P130 – RCC port

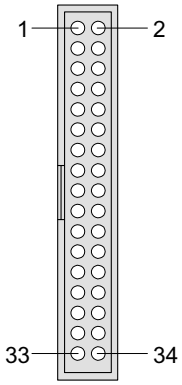

P130 is a 34 pole 2 line male connector used for connecting an RCC, Remote Communication Control unit.

The P130 connector contains both the modem connection and RCC power supply.

Operational Control

The FON unit can be locally or remotely controlled via an O&M software (remote control via modem).

All descriptions in this document refer to the OM-Online O&M software. Parameter names may differ somewhat when working with OMS, but the functionality of the parameters are the same.

4. RF Over Fiber

This chapter describes the downlink RF modulated signal from the BTS to the repeater antenna, and the other way around from the repeater antenna to the BTS. The description is focused on the optical part of the RF transmission.

The chapter is divided into the following main parts:

- RF signal path overview for downlink and uplink signals, page 4-2.
- Detailed description of the downlink signal path, page 4-3.
- Detailed description of the uplink signal path, page 4-8.
- Brief description of the FOU, Fiber Optic Unit, page 4-10.
- Brief descriptions of noise, intermodulation, and dynamic signal range, page 4-11.
- Some examples of simplex transmission, page 4-12.
- Some examples of full-duplex transmission, page 4-13.

The RF Modulated Signal Paths

Figure 4-1 illustrates the downlink RF modulated signal path from the BTS via a BMU, optical fiber, and a FOR to the repeater antenna. And also the uplink path from the repeater antenna back to the BTS.

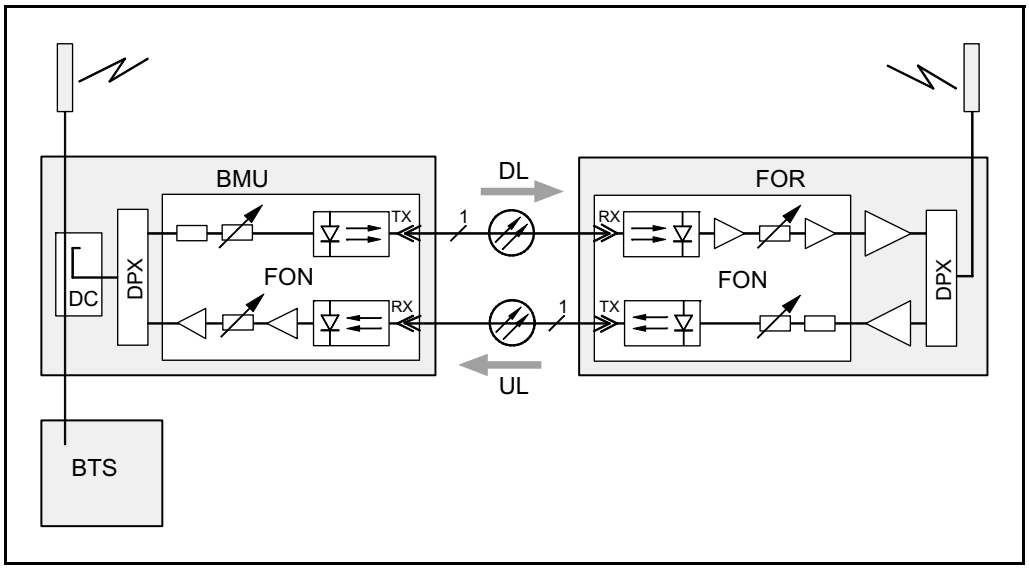

Figure 4-1. Downlink and uplink RF modulated signal paths

As the signal paths mainly are handled by the FON units, the signal description for this unit, found in the *RF Path 1* and *RF Path 2* sections in Chapter 3, is applicable to the downlink and uplink RF modulated signal paths. The amplifiers and duplex filter (DPX) in the FOR are, however, not included in the FON description, but are found in the repeater manual (VD203 66/EN, *AR Repeaters, User's Manual*).

The signal paths are, however, also described below, but more in terms of radio frequency signals in the entire chain, from the BTS to the repeater antenna, and the other way around.

Downlink RF Signal Path

The downlink RF modulated signal path, from the BTS to the repeater antenna, is shown in Figure 4-2. The item numbers in the figure are described below.

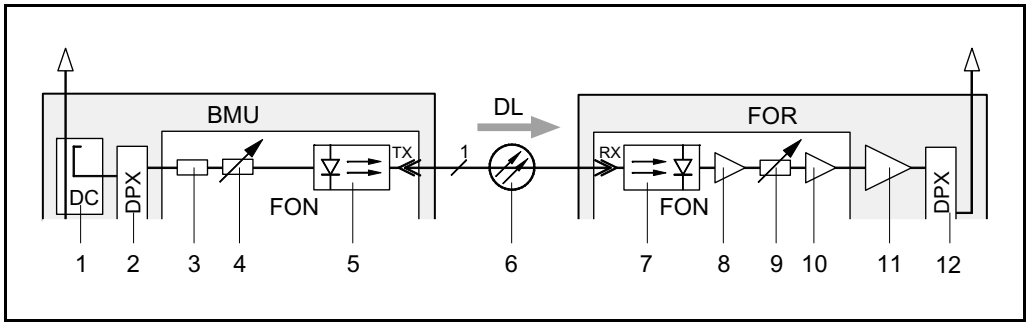

Figure 4-2. Downlink RF transmission path

1. DC coupler

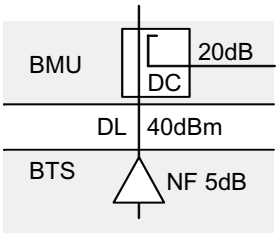

The DC coupler on the BTS antenna path picks up the BTS downlink signal with a fixed coupling loss of 20dB.

The left figure shows the DC coupler connected to the BTS antenna path and the BTS downlink amplifier with a typical noise figure of 5dB.

The values in the figure are typical values that can vary from one system to another.

2. DPX duplex filter

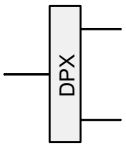

A Powerwave duplex filter separates the downlink and uplink signal frequencies between the BTS antenna path and the separate input/output RF ports of the FON unit.

The Powerwave DPX filter has a typical loss of 1dB.

3. Power attenuator

16dB, 8W

An input 16dB/8W power attenuator is a security attenuator for the FON unit.

4. Software adjustable attenuator

0 – 20dB

The software adjustable 0 – 20dB attenuator is set manually via an O&M software. This is described in the FON section of the VM100 01/EN, *OM-Online, User's Manual*.

The attenuator should be set to a calculated value that attenuates the signal power to 0dBm to the following optical transmitter.

Example: Presume the typical values in the figures above are used, that is:

- BTS output = 40dBm
- DC coupler loss = 20dB
- DPX filter loss = 1dB
- power attenuator = 16dB

Set the attenuator to 3dB (40dBm – 20dB – 1dB – 16dB = 3dB).

5. Optical transmitter

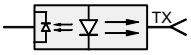

The optical transmitter converts the electrical RF modulated signal to a 1310 or 1550nm optical RF modulated signal. The transmitter ends with an optical female connector.

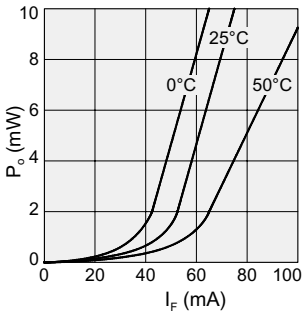

The transmitter has a laser diode for transmitting the optical signal, and a back-facet monitor photodiode that provides a real-time monitoring of the optical output.

The back-facet monitor photodiode is used to control the laser treshold current that is temperature dependent. See the treshold current bends of the optical power output curves for some different temperatures in the left figure. The values shown in the diagram are typical values that can vary for diffierent devices.

By using the back-facet monitor photodiode, the optical transmitter is compensated for different operating temperatures and a temperature non-dependent electrical-to-optical curve can be used, see Figure 4-3.

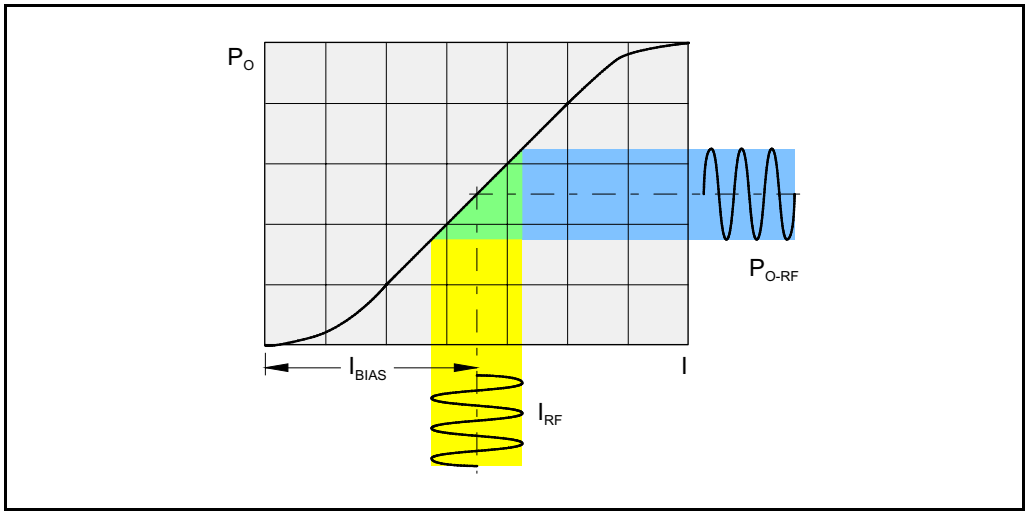

Figure 4-3. Electircal to optical signal conversion

The RF modulated optical output signal $P_{O\text{-}RF}$ has the same shape as the RF modulated electrical input signal I_{RF}, see Figure 4-3. The I_{BIAS} current is set to keep the dynamic $\div I_{RF}$ current range within the straight part of the curve, provided the input power is kept on about 0dBm (or lower). If the input power is much higher, then the $P_{O\text{-}RF}$ will be distored.

The output signal can be the default power range or be set to a low power range via an O&M software. Default power range means 3.5 – 5dBm, low power range 0.5 – 2dBm.

The noise figure for the optical transmitter is 30 – 35dB.

The IP3 level is 30 – 35dBm.

6. Optical transmission

In the example shown in Figure 4-2, the optical downlink transmission (between the optical transmitter and the optical receiver) is built-up with two optical connectors and one single-mode fiber.

The optical connectors are of DIN/APC type. The coupling loss (gap and misalignment losses) for this connector type is approximately 0.5dB.

The single-mode fiber loss is approximately 0.35dB/km for 1310nm and 0.20dB/km for 1550nm.

The maximum fiber attenuation should not exceed 15dB.

Example:
At a distance of three kilometers, the optical transmission loss for a 1310nm signal is approximately 2dB (0.5dB + 3x0.35dB + 0.5dB), and for a 1550nm signal approximately 1.6dB (0.5dB + 3x0.20dB + 0.5dB).

The optical transmission loss will increase for devices used to split the signal path to more than one receiver or to use the same fiber for both transmission directions. This is further described in the *Simplex Transmission* section on page 4-12, and in the *Duplex Transmission* section on page 4-13.

Note that all optical losses, except for FOT/FOT and FON/FON conversion losses, are to be multiplied by two when converting to electrical RF losses.

The reason why the optical loss has to be multiplied by two (in dB) is that the light detector in the optical receiver has a square shaped input area and thus extracts the square root of the input power.

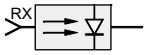

7. Optical receiver

The optical receiver performs the opposite function to the optical transmitter. It contains a light detector, that is a semiconductor photodiode that produces current in response to incident 1310 or 1550nm light.

The conversion from an optical signal to an electrical RF signal is shown in Figure 4-4.

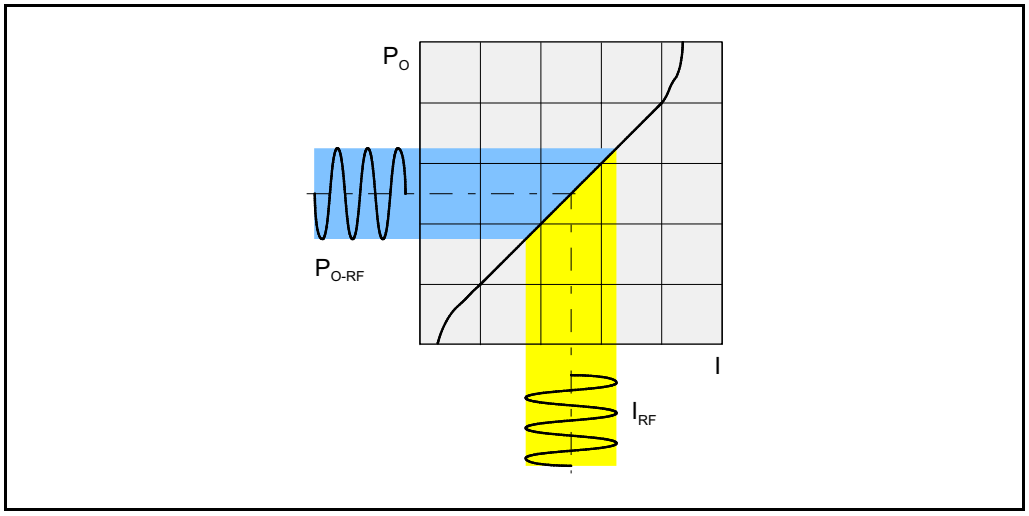

Figure 4-4. Optical receiver light detector

The optical input power to the light detector has to be between –15dBm and 1dBm. To avoid detector saturation that will result in signal distortion, it should be less than 1dBm.

The optical output power is independent of the TX attenuation.

The light detector adds very low amounts of shot noise and thermal noise.

8. Amplifier

The converted electrical RF modulated signal is amplified in a 16dB amplifier with a noise figure of 4dB.

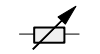

9. Software adjustable attenuator

The software adjustable 0 – 20dB attenuator is set manually via an O&M software. This is described in the FON section of the VM100 01/EN, *OM-Online, User's Manual*.

Setting, see the following amplifier.

10. Amplifier

The RF modulated signal is finally amplified in the last FON stage, a 16dB amplifier with a noise figure of 4dB.

The output signal minimum noise (above the thermal noise) is 22dB.

The output power is set with the previous adjustable attenuator to match the repeater amplifier input level (maximum 13dBm).

To achieve maximum output power from the repeater, the input signal level to the repeater has to be correct with respect to the gain. The signal level is adjusted with the FON adjustable attenuator.

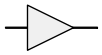

11. Repeater amplifier

The repeater amplifier consists of a low noise amplifier, LNA, a repeater amplifer stage, and a power amplifier. These stages are described in the VD203 66/EN, *AR Repeaters, User's Manual*.

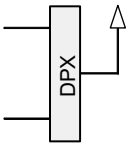

12. DPX duplex filter

Separates the downlink and uplink signal frequencies between the repeater service antenna and the separate downlink/uplink FOR amplifiers. The DPX filter is described in the VD203 66/EN, *AR Repeaters, User's Manual*.

Uplink RF Signal Path

The uplink RF modulated signal path, from the repeater service antenna to the BTS, is shown in Figure 4-5. The item numbers in the figure are described below. Item numbers are omitted for those items that have the same function and settings as in the downlink path.

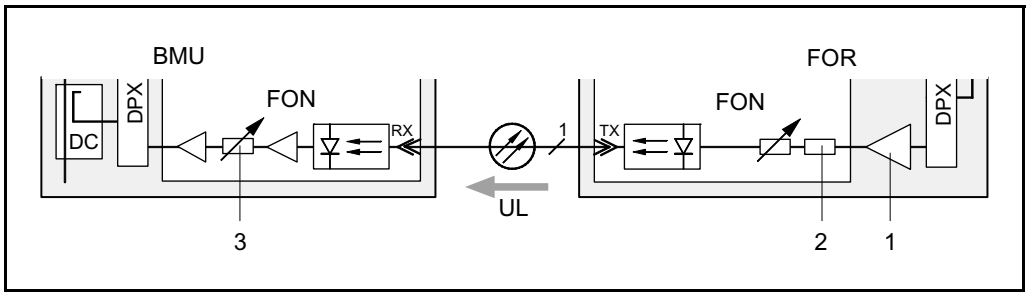

Figure 4-5. Uplink RF transmission path

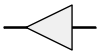

1. Repeater amplifier

The repeater amplifier is the same as the downlink amplifier, but in this case the output power should be adjusted to match the FON input power range, 10 – 36dBm.

16dB, 8W

2. Power attenuator

The input 16dB/8W power attenuator is the same as the downlink amplifier, but in this case an alternative configuration can be used.

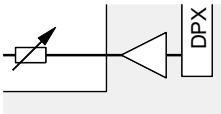

In the alternative configuration a FON unit without this power attenuator is used. In this case a lower output power from the FOR unit is fed directly to the following adjustable attenuator.

The advantage of this configuration is less signal noise.

0 – 20dB

3. Software adjustable attenuator

The software adjustable 0 – 20dB attenuator is set manually via an O&M software. This is described in the FON section of the VM100 01/EN, *OM-Online, User's Manual*.

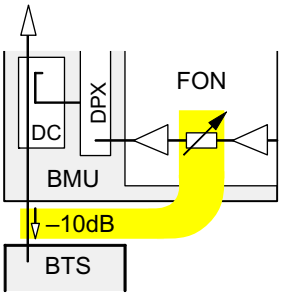

If the BTS has a larger coverage area than the repeater, then the attenuator is usually adjusted to a total uplink gain to the BTS of –10dB (shown in the figure).

If the coverage area is the same for the BTS and the repeater, then the BTS antenna input sensitivity with connected repeater should be the same as the sensitivity at the repeater antenna input.

The total uplink gain can, however, not be set only on the software adjustable attenuator but has to be balanced on the three uplink set points highlighted in Figure 4-6 (see the next section).

Setting the total uplink gain

The three uplink set points, highlighted in Figure 4-6, have to be balanced to a total uplink gain appropriate to the ratio of the coverage areas for the BTS and the repeater.

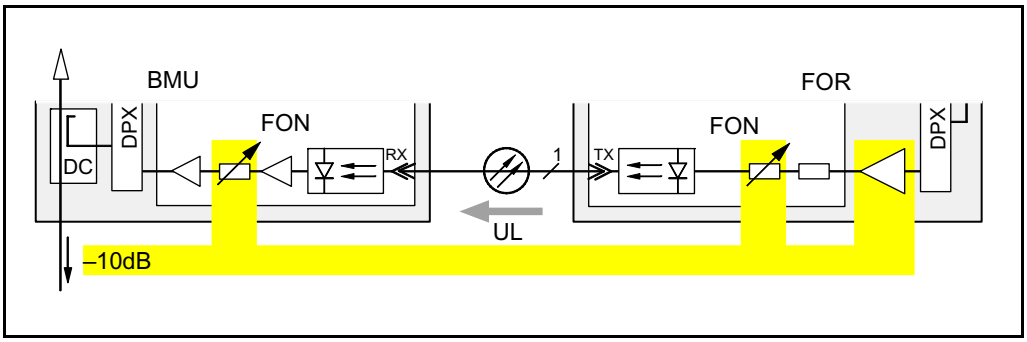

Figure 4-6. Total uplink gain setting points

Coupling factors and power losses in the entire uplink chain, including the optic fiber, have also to be considered when setting the total uplink gain.

A power calculator should be used when determining the uplink settings.

Some examples with various settings are found in Chapter 6, *Commissioning*.

FOU, Fiber Optic Unit

The FOU, Fiber Optic Unit, is a complete unit for fiber optic interconnection of two or more repeaters. It is built up on a flanged plate and can be inserted in all types of LGP Allgon AR repeaters. In the simpliest configuration, it contains a FON board and a DPX filter.

Figure 4-7 shows a simple configured FOU, Fiber Optic Unit.

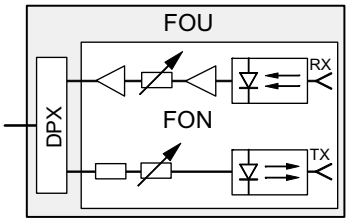

Figure 4-7. The FOU, Fiber Optic Unit

An FOU inserted in the BMU and in the FOR is shown in Figure 4-8.

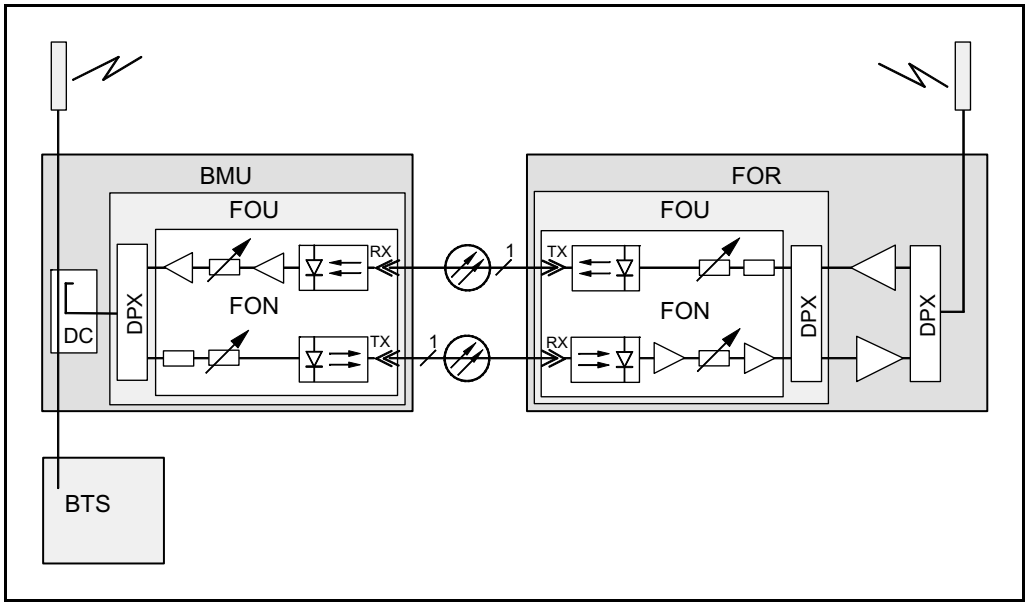

Figure 4-8. FOU inserted in the BMU and FOR

The FOU can also be configured with optical splitters for more than one FOR in the optical network, and with WDMs for optical duplex transmission.

Noise, Intermodulation and Dynamic Signal Range

This section contains brief descriptions of noise, intermodulation, and dynamic signal range.

Noise and intermodulation

Figure 4-9 shows noise and intermodulation values for the optical transmission.

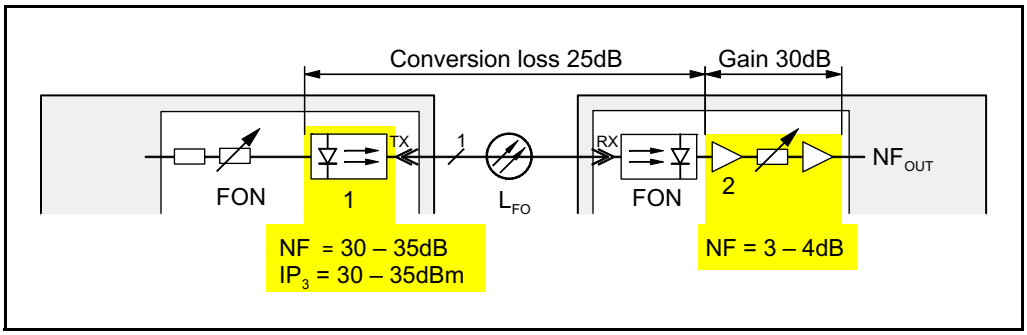

Figure 4-9. Noise and intermodulation

If the fiber loss, L_{FO}, is lower than 5dB, the output noise figure, NF_{OUT}, is determined by the optical transmitter ('1' in Figure 4-9).

If the fiber loss, L_{FO}, is higher than 5dB, the output noise figure, NF_{OUT}, is determined by the receiver amplifier (2).

Intermodulation and IP_3

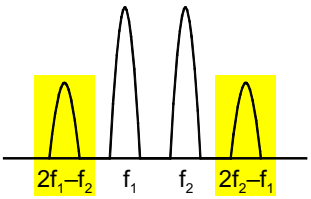

The third order of intermodulation is illustrated on a frequency axis in the figure.

The formula for it reads: $IM_3 = 3P_0 – 2IP_3$ dB

where:

IM_3 = Intermodulation level.
P_0 = Carrier power.
IP_3 = The IP_3 point of the amplifier.

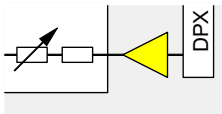

The IP_3 values from the various types of repeater amplifiers are:

BSA 54dBm
CHA 68dBm for 2 channels, 65dBm for 4 channels.
ALR 48dBm (compact repeater and RH)
WRH 35dBm

Dynamic signal range

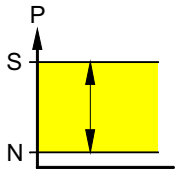

The dynamic range for the RF signal is determined by the noise level and the IM requirements. The dynamic range is represented by a vertical arrow in the figure, where:

P = Power
S = Signal level.
N = Noise floor + intermodulation.

Simplex Transmission

This section contains two examples of simplex transmission over fiber.

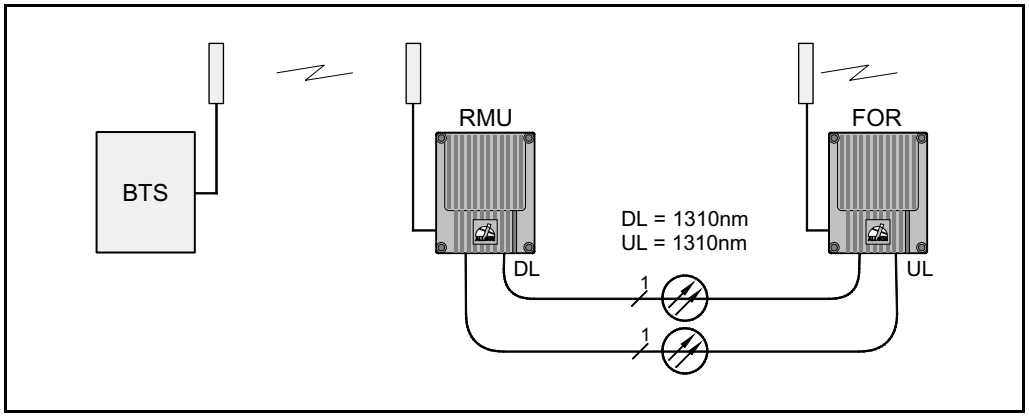

Figure 4-10. Simplex transmission between an RMU and a FOR unit

The first example, shown in Figure 4-10, illustrates a simple configuration. This configuration is described in the previous sections in this chapter, but in this case an RMU is used for radio transmission with the BTS.

The downlink and uplink wavelength is 1310nm.

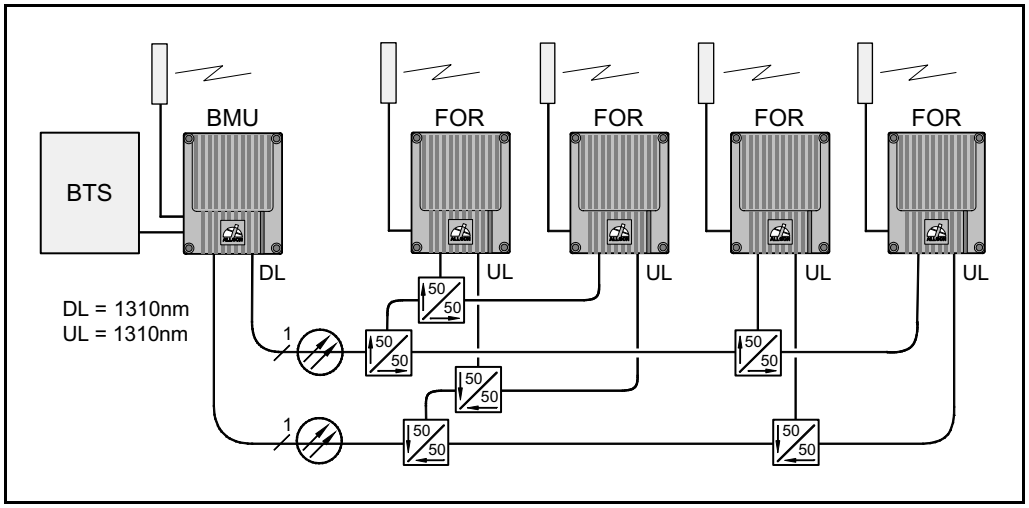

Figure 4-11. Simplex transmission between a BMU and four FOR units

The second example, shown in Figure 4-11, illustrates a BMU and four FOR units connected via optical splitters in a star configuration. Downlink and uplink wavelength is 1310nm.

The optical power loss for an optical 50/50 splitter is 3dB. Additional connectors add a loss of 0.5dB each. Due to the power sharing, up to approximately four slave nodes (FOR) can be connected to a master FON unit (BMU). For additional slave nodes, another FON unit has to be inserted in the BMU.

The optical splitters are usually included in the FOU located in the BMU. Figure 4-11 shows, schematically, these parts outside the BMU cabinet.

Duplex Transmission

This section contains two examples of full-duplex transmission over fiber.

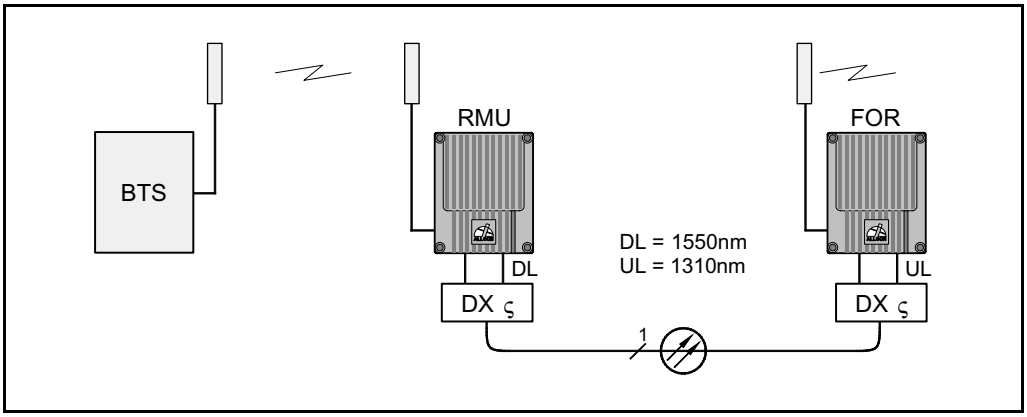

Figure 4-12. Duplex transmission between an RMU and a FOR unit

The first example, shown in Figure 4-12, illustrates the same repeater configuration as in the previous section, but now with full-duplex over one fiber achieved by using an optical WDM (DX ς) in each repeater.

The downlink wavelength is 1550nm, the uplink wavelength is 1310nm.

The power loss for an optical WDM is 1dB. Additional connectors add the loss by 0.5dB each.

The WDMs are included in the FOUs.

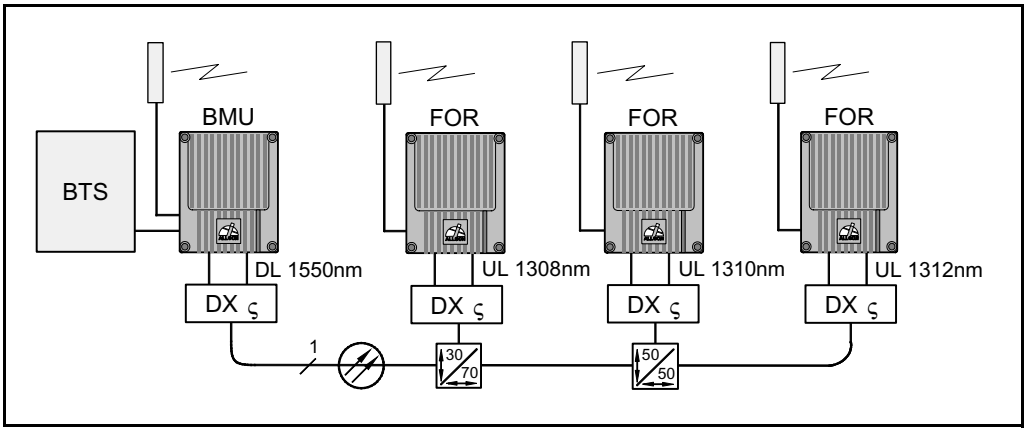

Figure 4-13. Duplex transmission between a BMU and three FOR units

The second example, shown in Figure 4-13, illustrates a BMU and three FOR units interconnected via optical splitters in a chain configuration. Full-duplex over one fiber is achieved by using an optical WDM (DX ς) in each repeater node.

The downlink wavelength is 1550nm, the uplink wavelengths are 1308nm, 1310nm, and 1312nm from the three slave nodes (FOR).

The optical power loss for an optical 30/70 percent splitter is 5.2dB/1.5dB, for a 50/50 percent splitter 3dB. The power loss for an optical WDM is 1dB. Additional connectors add the loss by 0.5dB each. Due to the power sharing, up to approximately four slave nodes (FOR) can be connected to a master FON unit (BMU). For additional slave nodes, another FON unit has to be inserted in the BMU.

The optical WDMs and splitters are usually included in the FOU located in the BMU. Figure 4-13 shows, schematically, these parts outside the BMU cabinet.

5. IP Over Fiber

IP (Internet Protocol) network is the latest Powerwave network type with UDP/IP protocol and many features, such as wire or fiber connection, PPP, routing capabilities for many sub networks, etc.

IP network communication includes communication between network nodes as well as communication between gateway nodes, for instance FON units, and an O&M software.

Communication can be initiated either by an O&M software or a network node.

When initiated by an O&M software, an operator connects to the network and logs on to the desired node. An OMS station can also initiate scheduled communication that automatically connects to the network and logs on to a node.

A network node initiates communication when an alarm is to be transferred, normally to an OMS station. It also initiates communication if callback is required in a logon session.

All operation and maintenance of repeaters and remote hubs are carried out via an O&M software connected to a network. There are two network types that can be used for this purpose, IP network and R2R network.

This chapter describes IP networks only and is focused on fiber networks.

IP networks over wire and R2R networks are described in the VM100 01/EN, *OM-Online, User's Manual*. This manual also contains further information about IP networks, IP address planning, and network configuration.

This chapter is divided into the following main parts:

- Terminology for IP networks, page 5-2.
- Hardware and software requirements for IP networks, page 5-3.
- Fiber optic network characteristics, page 5-4.
- Node units in IP networks, page 5-5.
- Net interfaces of the FON unit, page 5-6.
- An example of a network, page 5-7.

IP Network Terminology

In the descriptions of the IP network the terminology in the following table is used.

Network type	IP	
Protocol	IP	
Network name	W-net	F-net
Link name	W-link	F-link
Link media	Wire	Fiber
Link interface	WLI	FLI

Abbreviations

IP	Internet Protocol.
W-net	Wire network.
F-net	Fiber network.
W-link	Wire link.
F-link	Fiber link.
WLI	Wire Link Interface.
FLI	Fiber Link Interface.

Other abbreviations used in this manual are found in the *Abbreviations* section in the beginning of this manual.

Net and Link

The following two figures show what a net means and what a link means in this manual.

Figure 5-1 shows a W-net or F-net with WLI or FLI interface respectively.

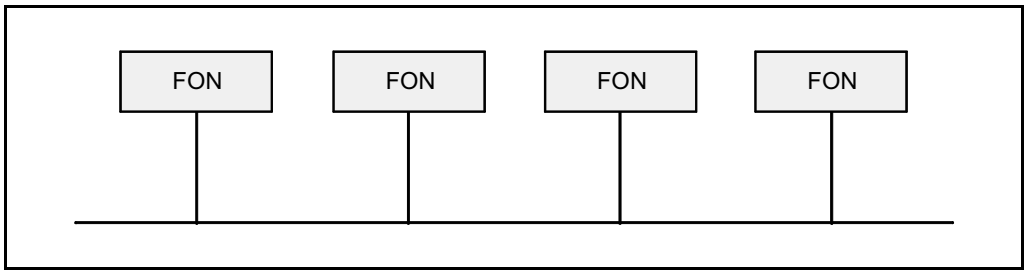

Figure 5-1. W-net or F-net

Figure 5-2 shows a W-link or F-link with WLI or FLI interface respectively.

Figure 5-2. W-link or F-link

Requirements

To be able to use an IP network, the FON hardware and software stated below is required. Hardware and software that does not meet the requirements below can be upgraded.

FON hardware

FON board	K129.

FON software

FON	SA102 05/1 version R1A or higher.

O&M software versions

An OM-Online, OMT32, or OMS station intended to be used on an IP network requires the following software versions:

OM-Online	SA102 60/1 version R1A or higher.
OMT32	SA102 51/3 version R2A or higher.
OMS	SA102 54/1 version R2A or higher.

F-Net Characteristics

The IP communication signal in an F-net is modulated on a sub carrier below the RF modulated signal.

The communication transfer rate is 66Kb per second.

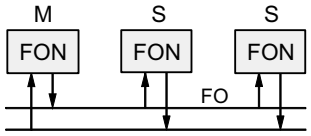

F-net can be built up with separate downlink and uplink fibers, multi-drop link communication, and a dedicated master node and slave nodes (M and S respectively in the left figure).

F-net can also be built up with single fiber and full-duplex transmission, see Figure 5-3.

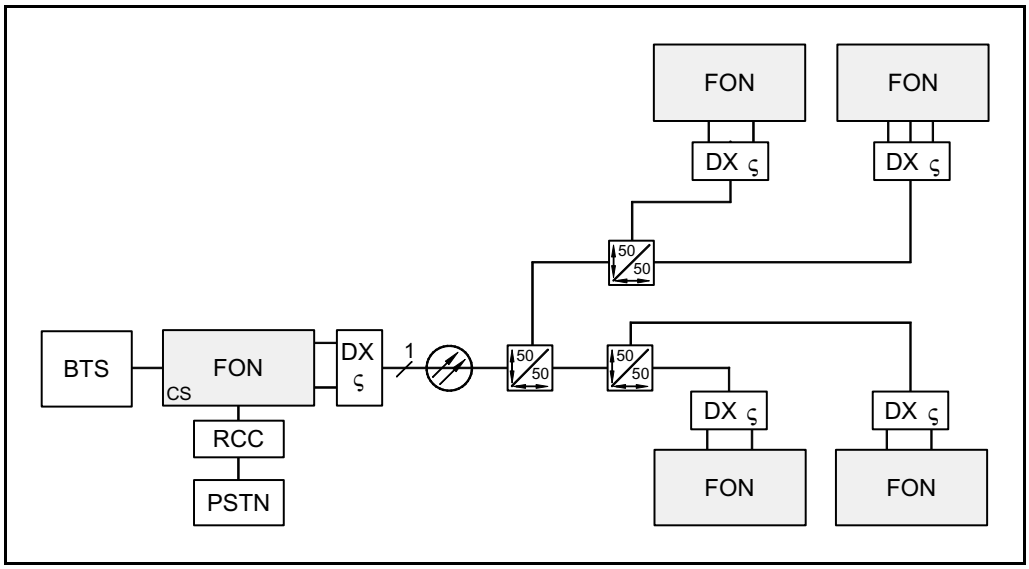

Figure 5-3. Single fiber network with five nodes

The network shown in Figure 5-3 has optical WDMs (DX ς) in each node, which makes it possible to use one downlink wavelength and four different uplink wavelengths in the same fiber.

An F-net contains one master node (the left FON unit in Figure 5-3) and it can contain up to approximately four slave nodes (the right FON units) due to the signal power sharing in the optical splitters. In Figure 5-3 there are three 50/50 percent splitters that reduce the signal power to each of the four slave nodes to 25% of the initial signal power.

In Figure 5-3, the master node is a gateway by means of an RCC. It can communicate with an O&M software via modem.

The left FON node (CS) only shall be configured with *Control Station Capability* and thus be the master unit. None of the other FON nodes are allowed to have the *Control Station Capability* because it is a master/slave network. Only one node is allowed to speak at the same time.

Control Station Capability is described in the VM100 01/EN, *OM-Online, User's Manual*.

Node Units

This section describes an example of node units used for communication between an O&M software and the nodes in a network.

A PC workstation loaded with the O&M software and configured with a modem can be connected to all nodes that have an RCC (or RCU) and communicate with other units in connected W-nets and F-nets.

Figure 5-4 shows an O&M workstation connected to an F-net, which is also connected to two W-nets.

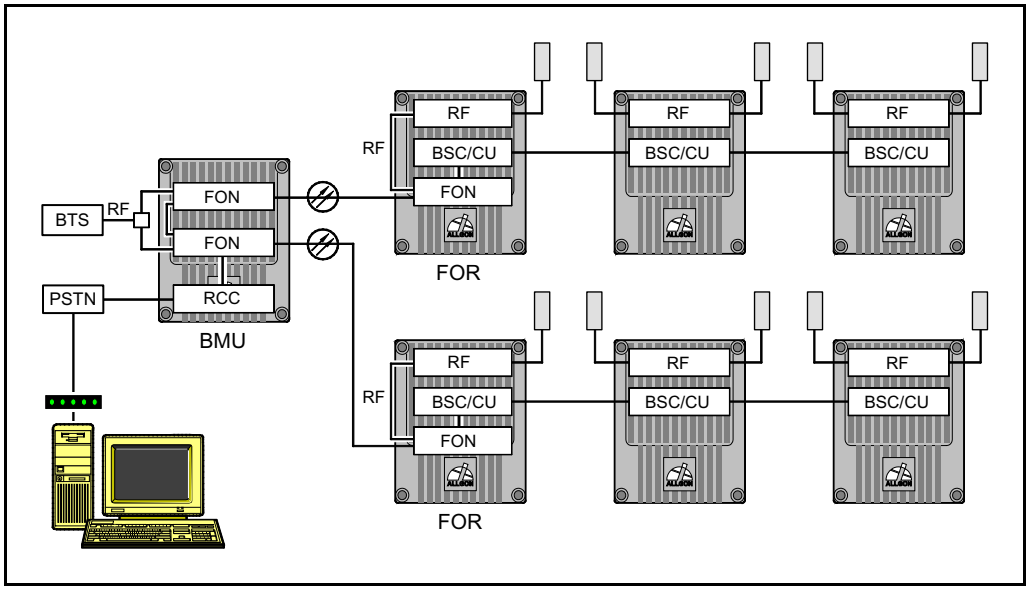

Figure 5-4. O&M workstation connected to an F/W-net

The fibers between the BMU and the FOR units are used for both RF transmission and network communication.

An internal backbone W-net in the BMU interconnects the FON units.

The two FOR units are also included in two W-nets together with two additional repeaters in each of these W-nets.

The O&M workstation in Figure 5-4 can communicate with any of the seven units (one BMU and six repeaters) included in the F-nets and W-nets.

The FON Unit Net Interfaces

This section describes the FON unit in networks, one of the most important subunits in repeater networks. The FON unit is here described as a block with network interfaces.

The FON board contains all software and protocols required for both W-net and F-net communication, routing included. A sole FON board can be a complete node in an F-net or W-net.

Figure 5-5 shows the FON board with the communication interfaces pointed out. The figure shows also some of the most important function blocks on the FON board. The small figure is a simplified block symbol of the FON board.

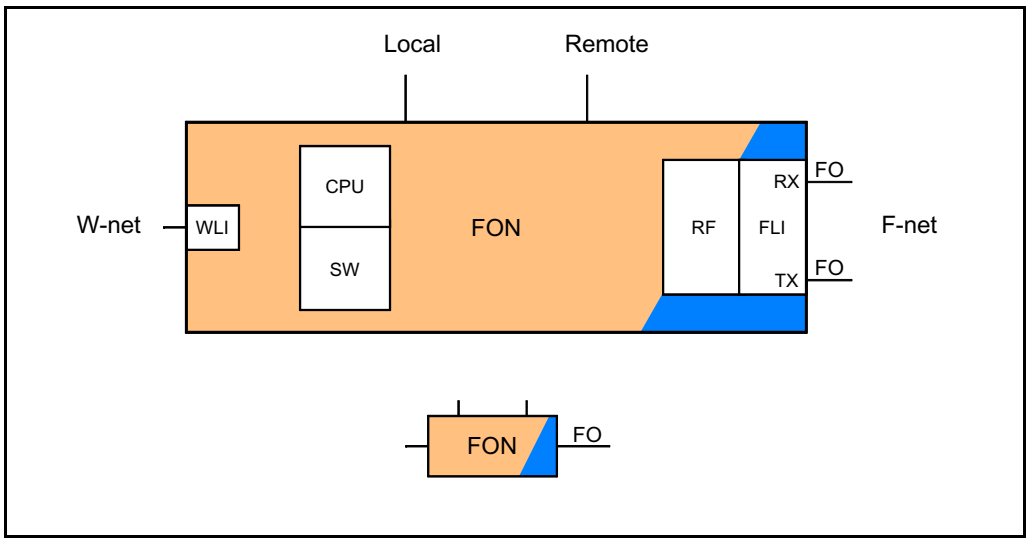

Figure 5-5. FON with communication interfaces

The CPU unit with loaded software (SW) controls the FON unit including the network communication. The RF block in Figure 5-5 converts electrical signals to optical signals and vice versa.

The local port is used for cable connection between the FON unit and an O&M workstation. PPP is used for communication via this port.

The remote port is used for remote connection between the FON unit and an O&M workstation via modem. PPP is used for communication via this port.

WLI is the communication port for W-net.

FLI is the communication port for F-net. In Figure 5-5, this part of the FON board is marked to indicate an optical part.

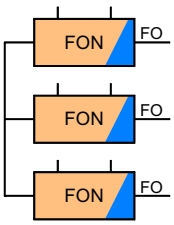

The W-net and F-net are interconnected in the FON board, which makes it possible to interconnect several F-nets via a W-net, see the small figure.

Network Example

An example of a repeater network with FON units is shown in Figure 5-6.

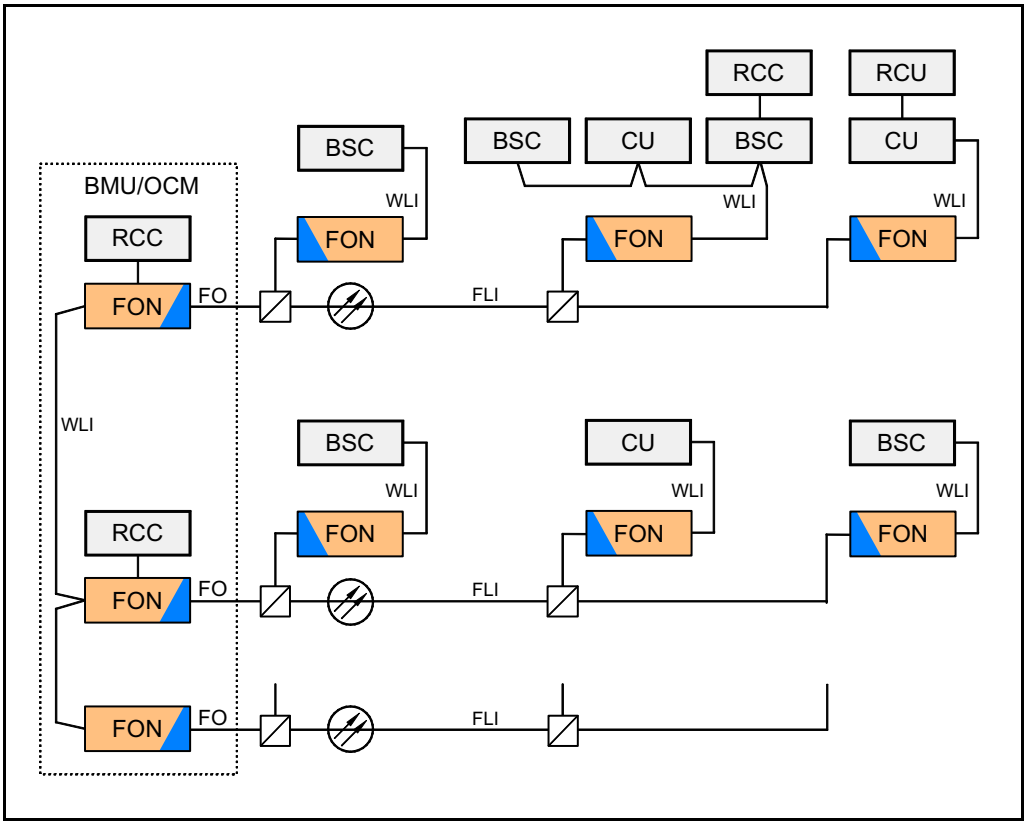

Figure 5-6. Repeater network example

This network has a BMU with three FON units as F-net master nodes. Two of which are gateway units. A backbone W-net interconnects the three FON units.

The three F-subnets (FLI) are connected to slave FON nodes via optical splitters. These slave FON nodes are connected to compact repeaters (BSC) and standard repeaters (CU) via W-subnets (WLI).

In this network there are four gateways connected to an RCU or RCC unit.

Further information about IP networks, IP address planning, and network configuration is found in the VM100 01/EN, *OM-Online, User's Manual*.

6. Commissioning

Read carefully Chapter 1, *Safety* before commissioning the optical system. See also the safety precautions for the current repeater or hub types.

Check all connections made during the installation. Also, ensure that both the mains plugs for repeaters equipped with two power supply units are connected to outlets supplied from the same fuse.

To fulfill the IP65 weather protective requirements, ensure that the cable strain relief bushings are properly tightened. Also, ensure that the gaskets at the cable inlets on the cabinet are properly fitted and not damaged.

When the installation is checked, commission the optical system as described in the following sections:

Equipment required for the commissioning is listed below.

☞ *This chapter contains commissioning instructions only. If you want to read descriptions of the various functions, see the previous chapters in this manual.*

Some system configuration examples are found on page 6-6 and the following pages.

If you get problems when commissioning the system, please contact your nearest Powerwave representative.

Equipment Required

To be able to commissioning an optical system you will need the following:

- Optical power meter.
- Laptop with O&M software and an RS232 serial cable.
- Spectrum analyzer.
- Repeater tools.
- Optical clenaer.

Commissioning the Fiber Optic System

Commission the optical transmission system as described in the following instruction. The instruction covers the optical system only and is therefore applicable to all units with optical transmission, for instance BMU, RMU, OCM, FOR, and RH.

Figure 6-1 shows a fiber optic system in a BMU and a FOR. These units are also used as examples in the instruction.

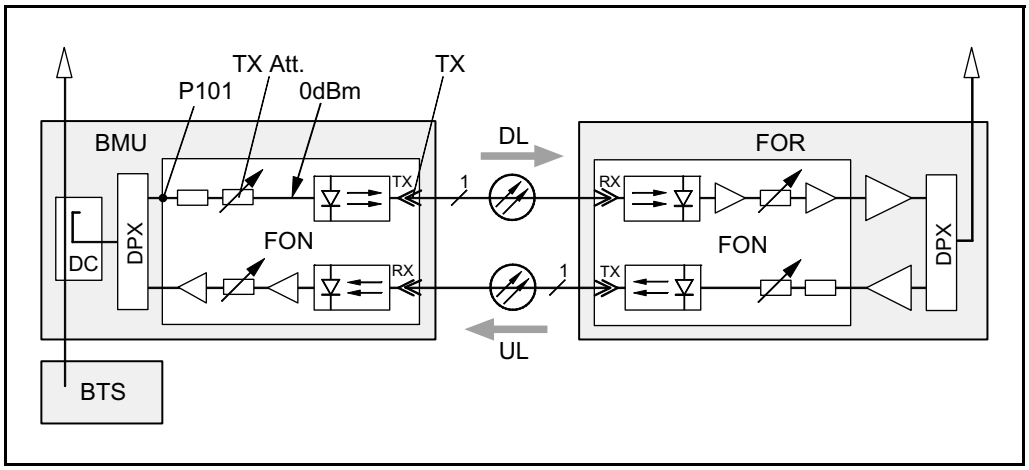

Figure 6-1. Master unit downlink path

Master Unit Downlink Path

1. Make sure the BMU is switched off.
2. Measure the downlink input RF signal power (from the BTS) at the FON board connector ’P101’ in Figure 6-1 (or at the OCM/BMU 19" rack) using a spectrum analyzer.

   The signal power should be between +10dBm and +36dBm.

   Write down the measured power value.
3. Switch the BMU on and wait until it is in operational mode.
4. Connect the O&M software to the FON board.
5. Measure the optical output power from the FON board (TX) using an optical power meter.

   If there is only one slave unit on a short distance, choose the low power range. Otherwise, keep the default high power range.

   If you are in doubt, choose high power and, if needed, change to low power if the received optical power is more than 4dBm at the slave unit.
6. Set the transmitter attenuation (TX Att.) to a value that gives the following optical transmitter an input power of approximately 0dBm. The attenuation is set via the O&M software (FON configuration).

P_{P101} – 20dB – XdB = 0dB

Meassured RF input signal level at P101 minus 20dB minus XdB attenuation equals 0dB. X is the attenuation set via O&M software. Write down the attenuation set.

7. Measure the optical output power from the FON board (TX) using an optical power meter. Write down the measured power value.

It is recommended to set date and time in the FON units, and to assign names to the units for future tracking.

Slave Units

Continue by performing the following on each slave unit.

8. Make sure the FOR/slave unit is switched off.

9. If two fibers are used, then make sure the uplink and downlink fibers are connected correctly in the FOR/slave unit.

   The downlink fiber has to be connected to the RX port and the uplink fiber to the TX port of the FON unit, see Figure 6-2. The FOR in the figure is a compact repeater.

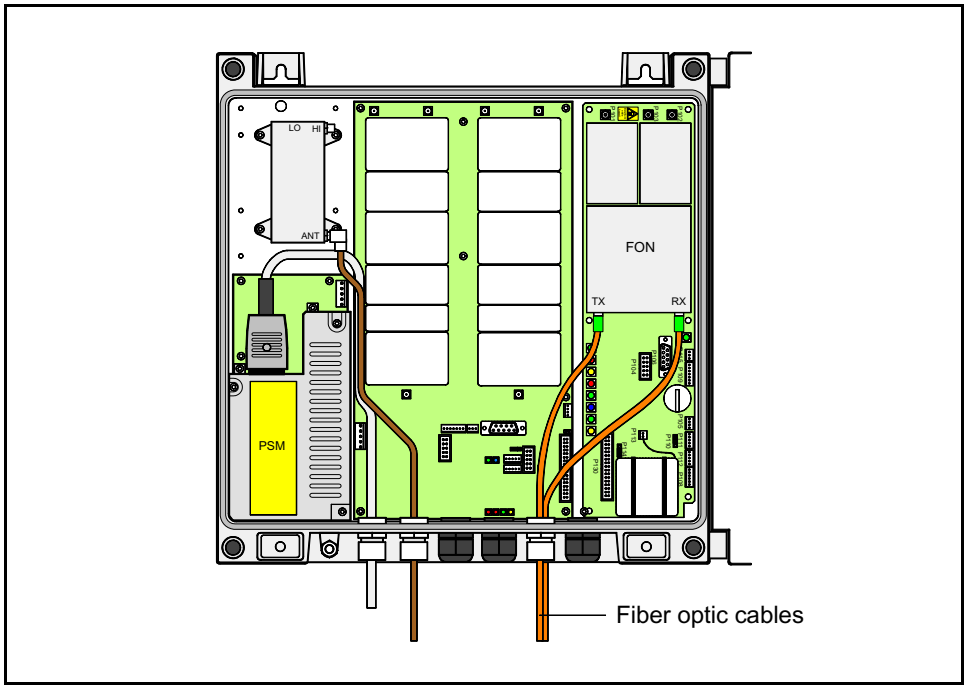

Figure 6-2. Fiber connection in a slave unit

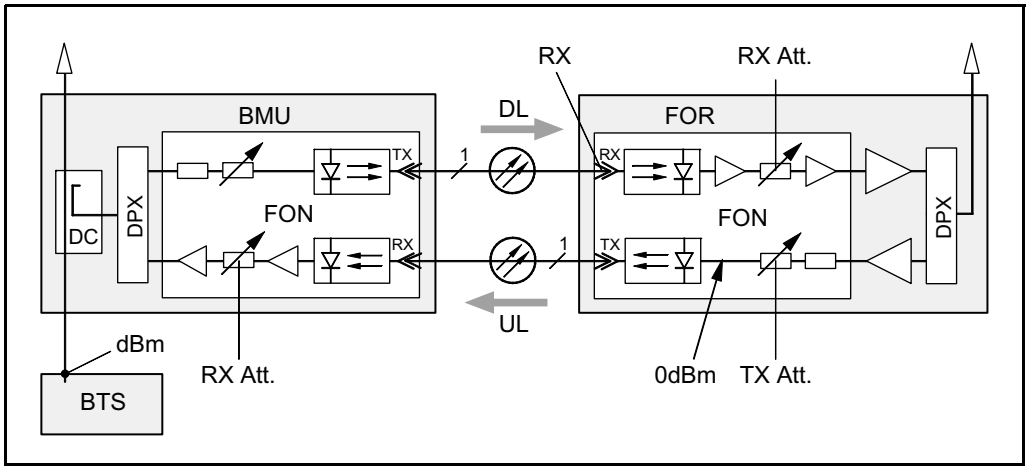

Figure 6-3. Slave unit downlink path, and uplink path

10. Switch the FOR on and wait until it is in operational mode.

11. Connect an O&M software to the FON board.

12. Measure the optical downlink input power ('RX' in Figure 6-3). The receiver level is measured via the O&M software (FON status).

Write down the measured optical power value.

13. Calculate the optical power loss from the TX port of the master FON board (step 5) to the RX port of the FOR/slave unit (step 12).

The loss includes fibers, WDMs, splitters, and connectors used in the current configuration.

The calculated optical loss should not exceed 15dB.

Write down the calculated optical loss value.

14. Set the receiver attenuation (RX Att.) via the O&M software (FON configuration).

An approximate receiver attenuation value can be set according to the calculated loss over the fiber in step 13. Choose value from the table.

Optical loss over fiber	Receiver attenuation
{ 10dB	10dB
} 10dB	5dB

15. Move the O&M software from the FON board to the repeater and set the desired repeater bandwidth and downlink gain.

16. Move the O&M software back to the FON board and set the transmitter attenuation (TX Att.) to a calculated value that gives the following optical transmitter an input power of approximately 0dBm.

17. Choose optical transmitter output power range via the O&M software as described in step 6.

18. Move the O&M software back to the repeater and set uplink attenuation and gain. Example of downlink and uplink settings are found in the following table.

Unit	Downlink	Uplink
BMU (FON)	5dB att.	10dB att.
FOR (FON)	10dB att.	5dB att.
BMU (RF)	60dB gain	60dB gain

The optical system is now ready for operation. A fine-tuning of the system should be done to get the most out of the system. And, the more nodes in the system the more reason to balance and fine-tune it.

The following section contains some system configuration examples.

System Configuration Examples

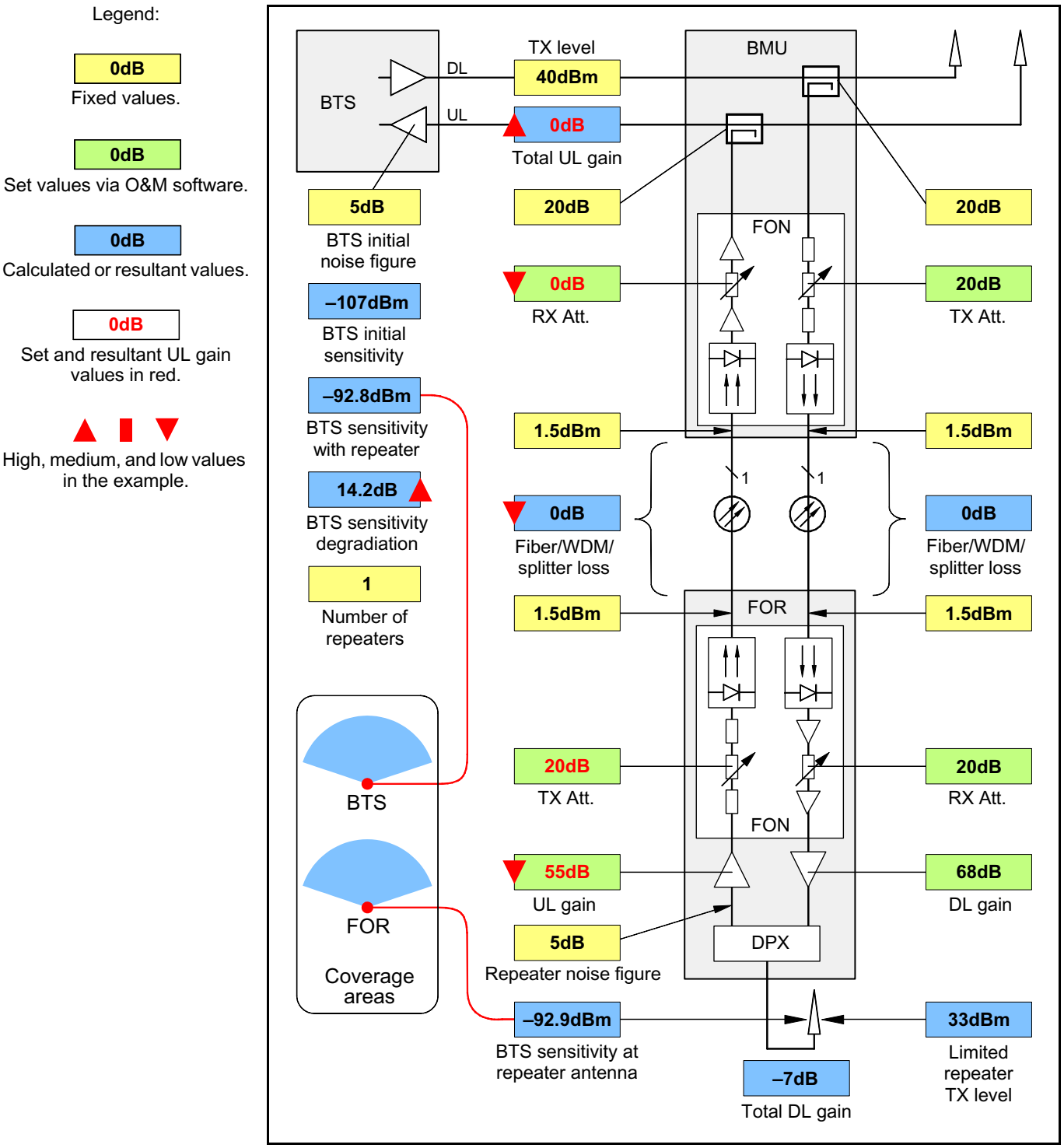

Figure 6-4. One FOR, low optical loss, low uplink gain and attenuation

Figure 6-4 shows a FOR connected with low optical loss, low uplink gain and low uplink attenuation. The *BTS sensitivity degradation* is high.

High total uplink gain and a *BTS sensitivty with repeater* very close to the *BTS sensitivity at the repeater antenna* indicates a similar coverage area for the BTS and the FOR.

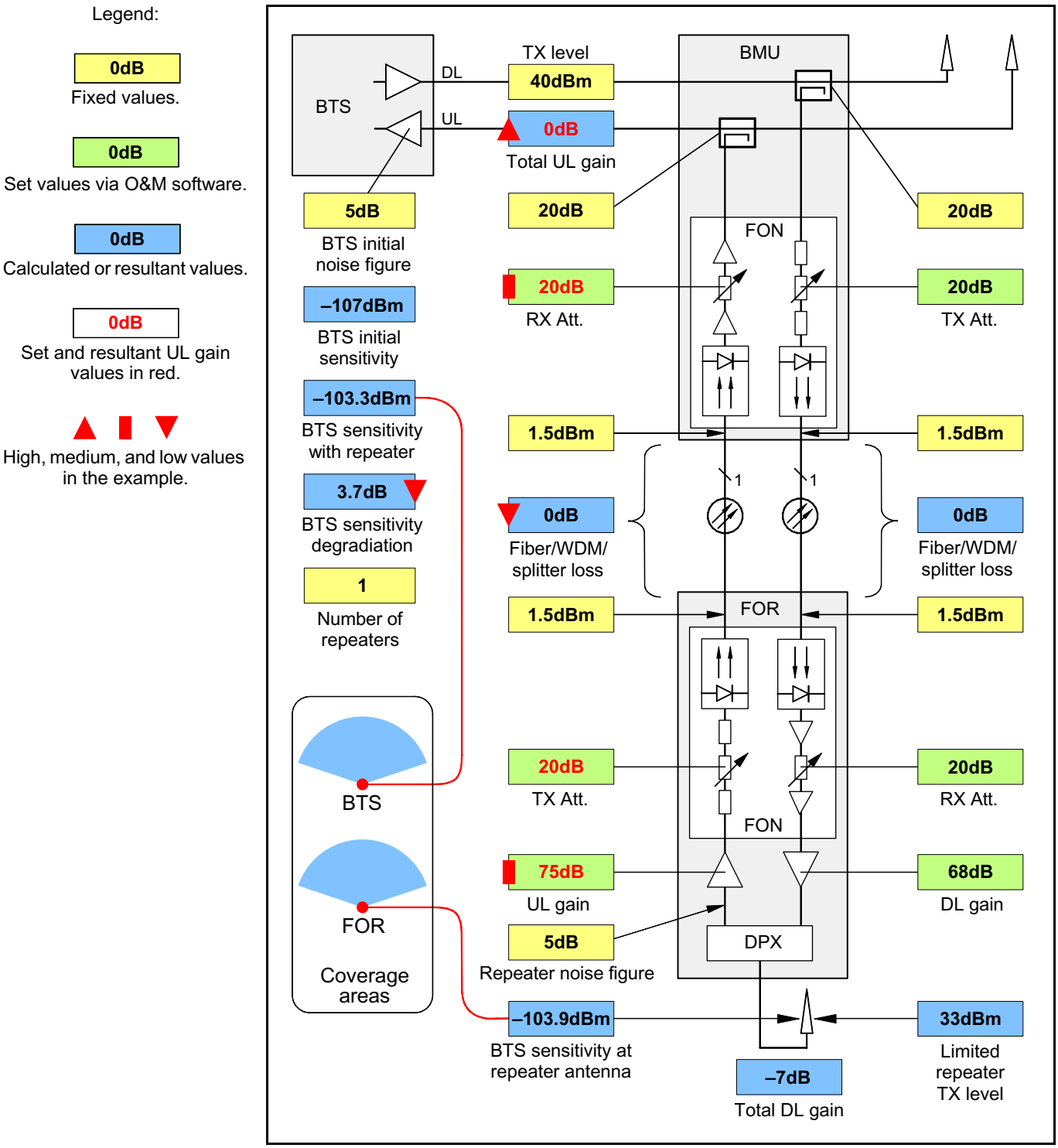

Figure 6-5. One FOR, low optical loss, medium uplink gain and attenuation

Figure 6-5 shows a FOR connected with low optical loss, medium uplink gain and medium uplink attenuation. The *BTS sensitivity degradation* is low.

High total uplink gain and a *BTS sensitivty with repeater* very close to the *BTS sensitivity at the repeater antenna* indicates a similar coverage area for the BTS and the FOR.

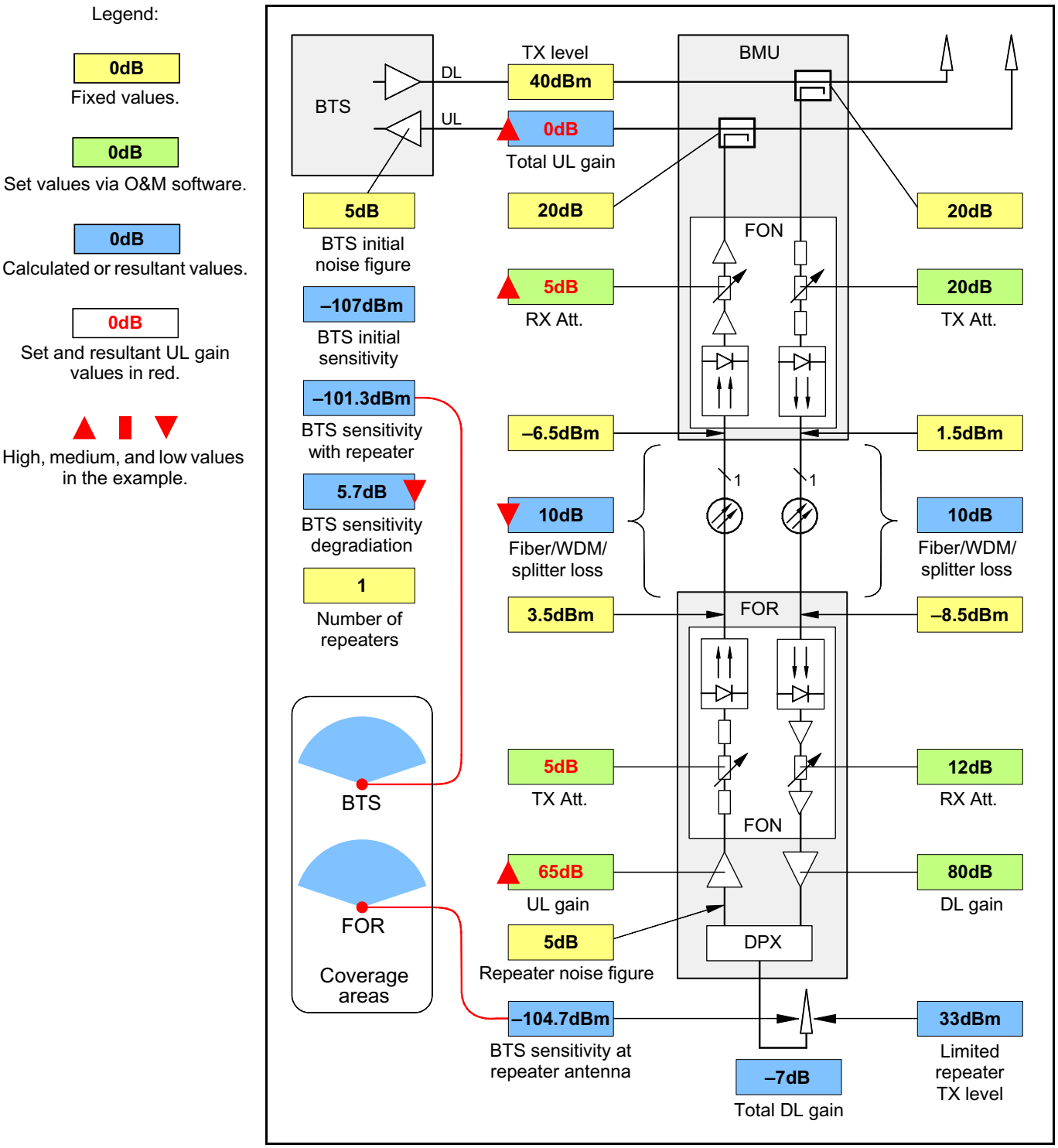

Figure 6-6. One FOR, low optical loss, high uplink gain and attenuation

Figure 6-6 shows a FOR connected with low optical loss, high uplink gain and high uplink attenuation. The *BTS sensitivity degradation* is low.

High total uplink gain and a *BTS sensitivty with repeater* very close to the *BTS sensitivity at the repeater antenna* indicates a similar coverage area for the BTS and the FOR.

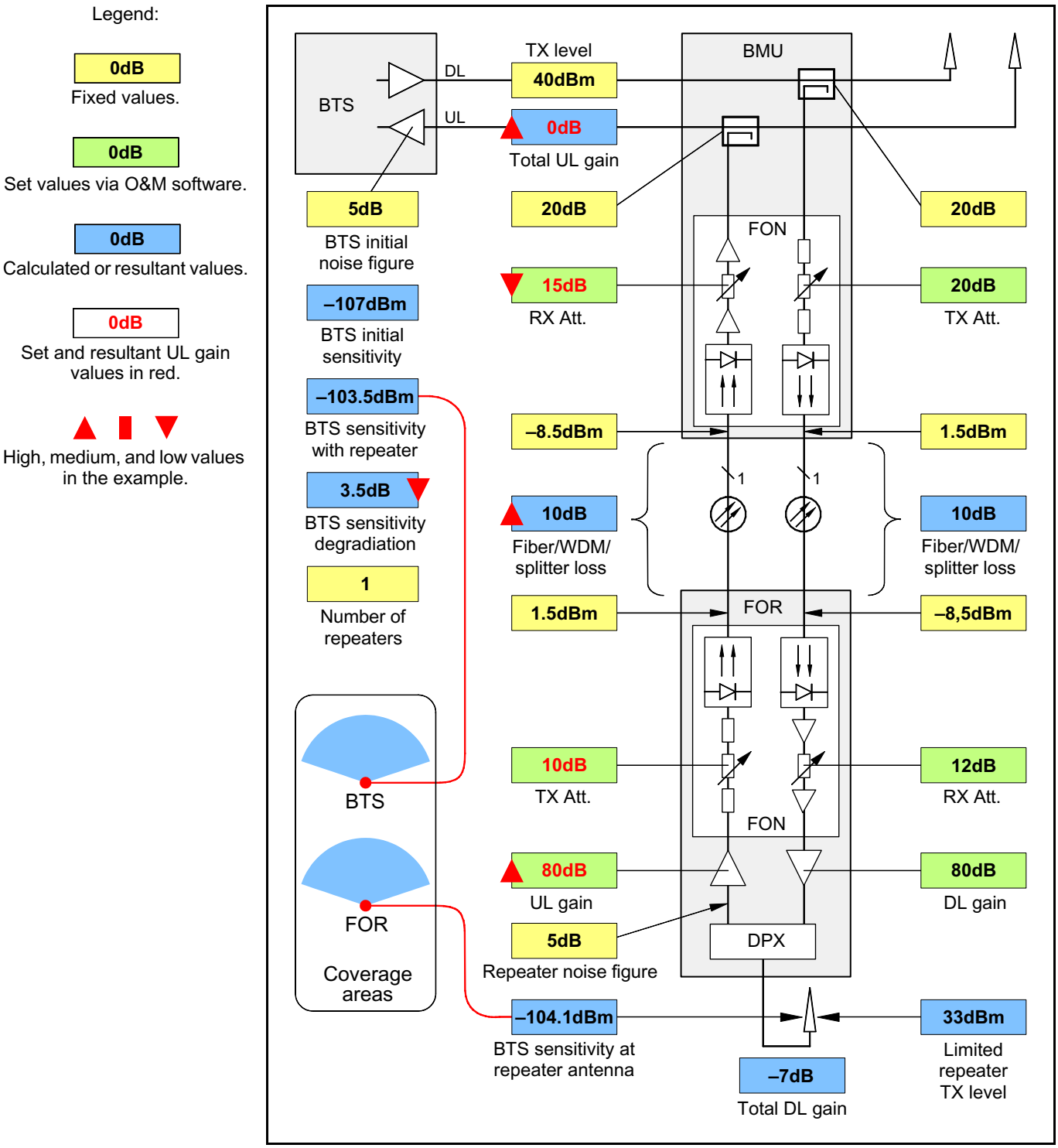

Figure 6-7. One FOR, high optical loss, high uplink gain

Figure 6-7 shows a FOR connected with high optical loss, high uplink gain and an uplink attenuation adapted to the optical loss. The *BTS sensitivity degradation* is low.

High total uplink gain and a *BTS sensitivty with repeater* very close to the *BTS sensitivity at the repeater antenna* indicates a similar coverage area for the BTS and the FOR.

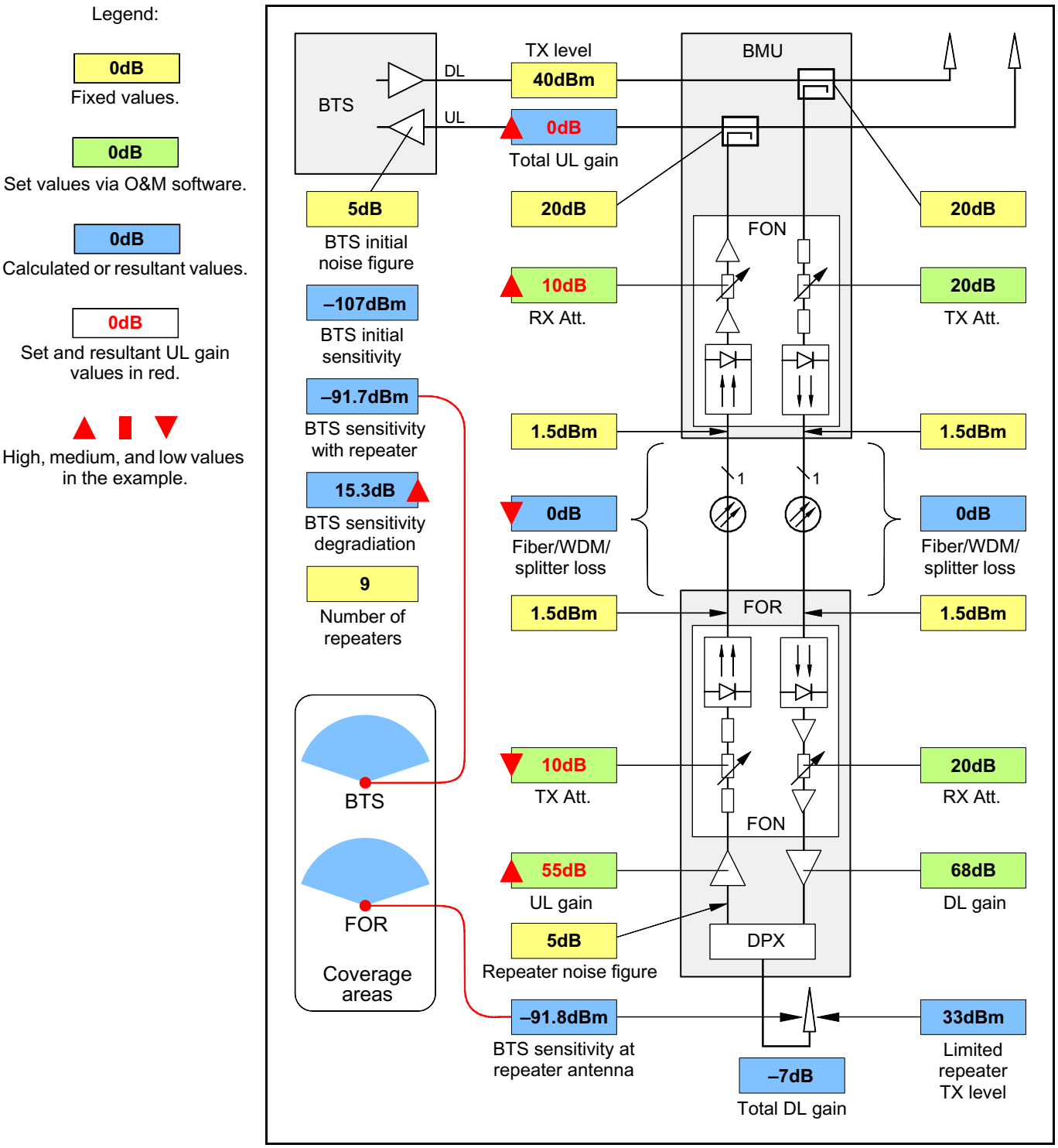

Figure 6-8. Nine FORs, low optical loss, high uplink gain and attenuation

Figure 6-8 shows one of nine FORs connected to one of three FON units in the BMU with low optical loss, high uplink gain and high uplink attenuation. The *BTS sensitivity degradation* is high.

High total uplink gain and a *BTS sensitivty with repeater* very close to the *BTS sensitivity at the repeater antenna* indicates a similar coverage area for the BTS and the FOR.

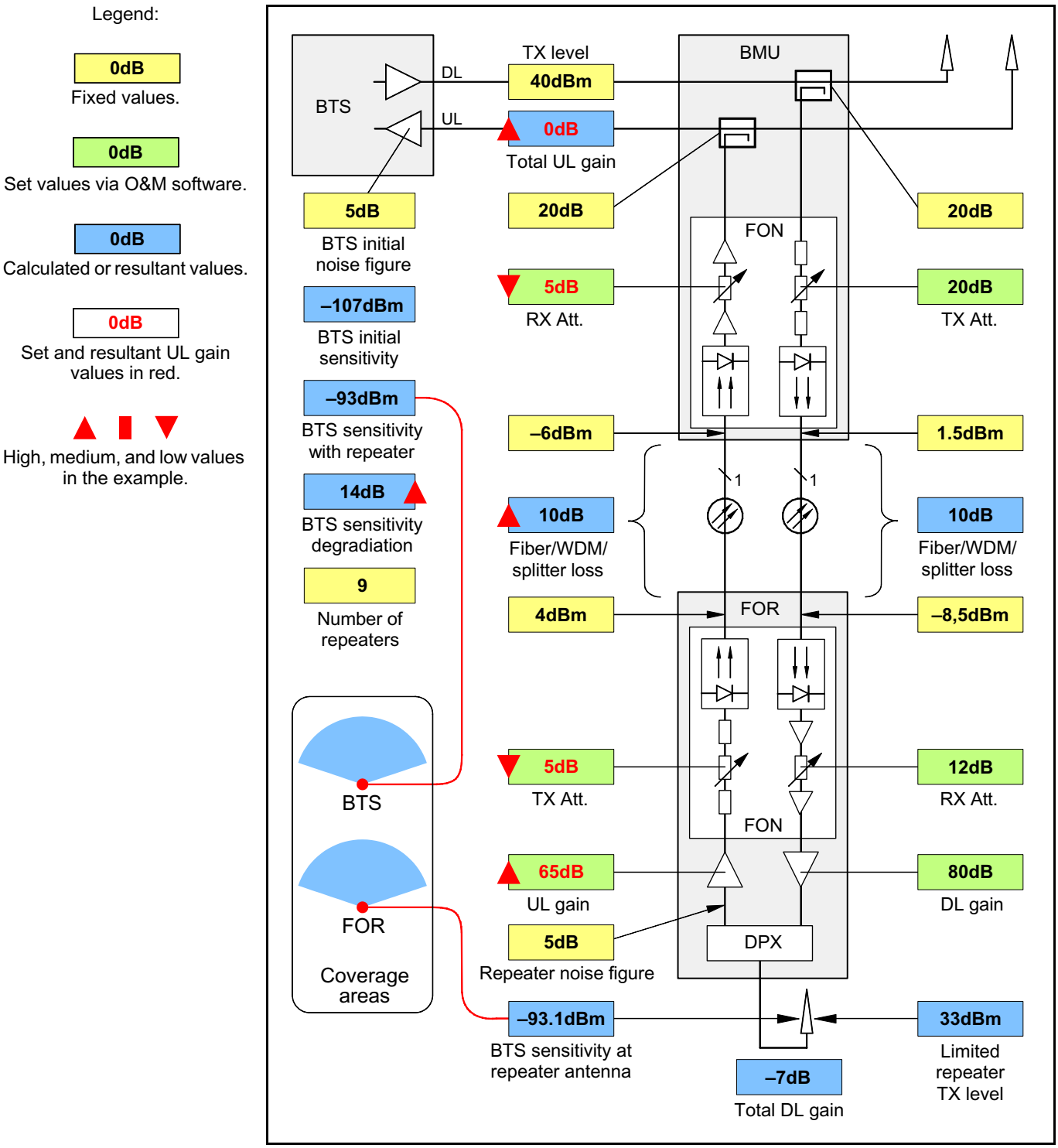

Figure 6-9. Nine FORs, high optical loss, high total uplink gain

Figure 6-9 shows one of nine FORs connected to one of three FON units in the BMU with high optical loss, high uplink gain and an uplink attenuation adapted to the optical loss. The *BTS sensitivity degradation* is high.

High total uplink gain and a *BTS sensitivty with repeater* very close to the *BTS sensitivity at the repeater antenna* indicates a similar coverage area for the BTS and the FOR.

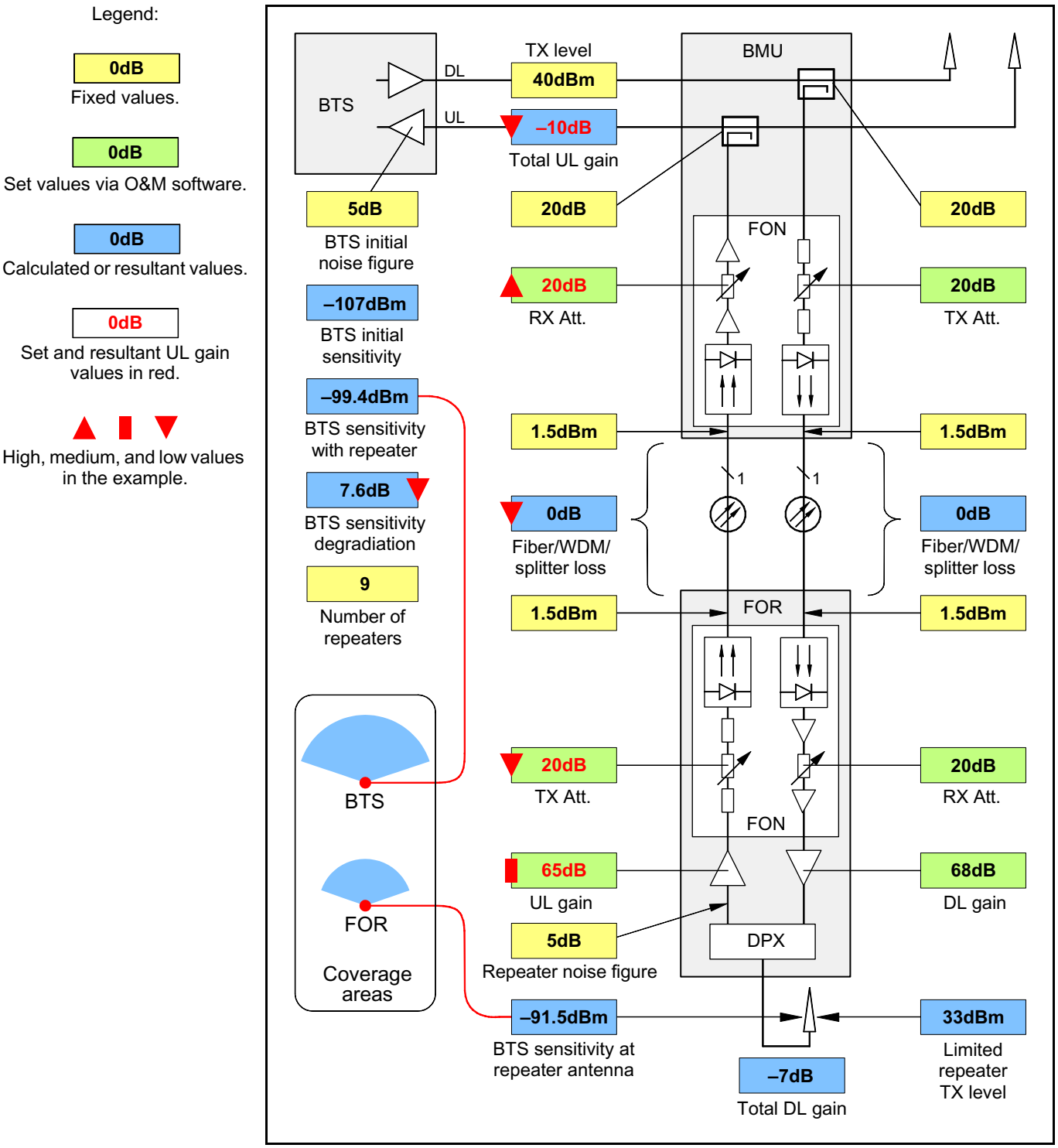

Figure 6-10. Nine FORs, low optical loss, low total uplink gain

Figure 6-10 shows one of nine FORs connected to one of three FON units in the BMU with low optical loss, medium uplink gain and high uplink attenuation. The *BTS sensitivity degradation* is low.

Low total uplink gain decreases the *BTS sensitivty with repeater* under the *BTS sensitivity at the repeater antenna* level, indicating a larger coverage area for the BTS than for the FOR.

Legend:

0dB
Fixed values.

0dB
Set values via O&M software.

0dB
Calculated or resultant values.

0dB
Set and resultant UL gain values in red.

High, medium, and low values in the example.

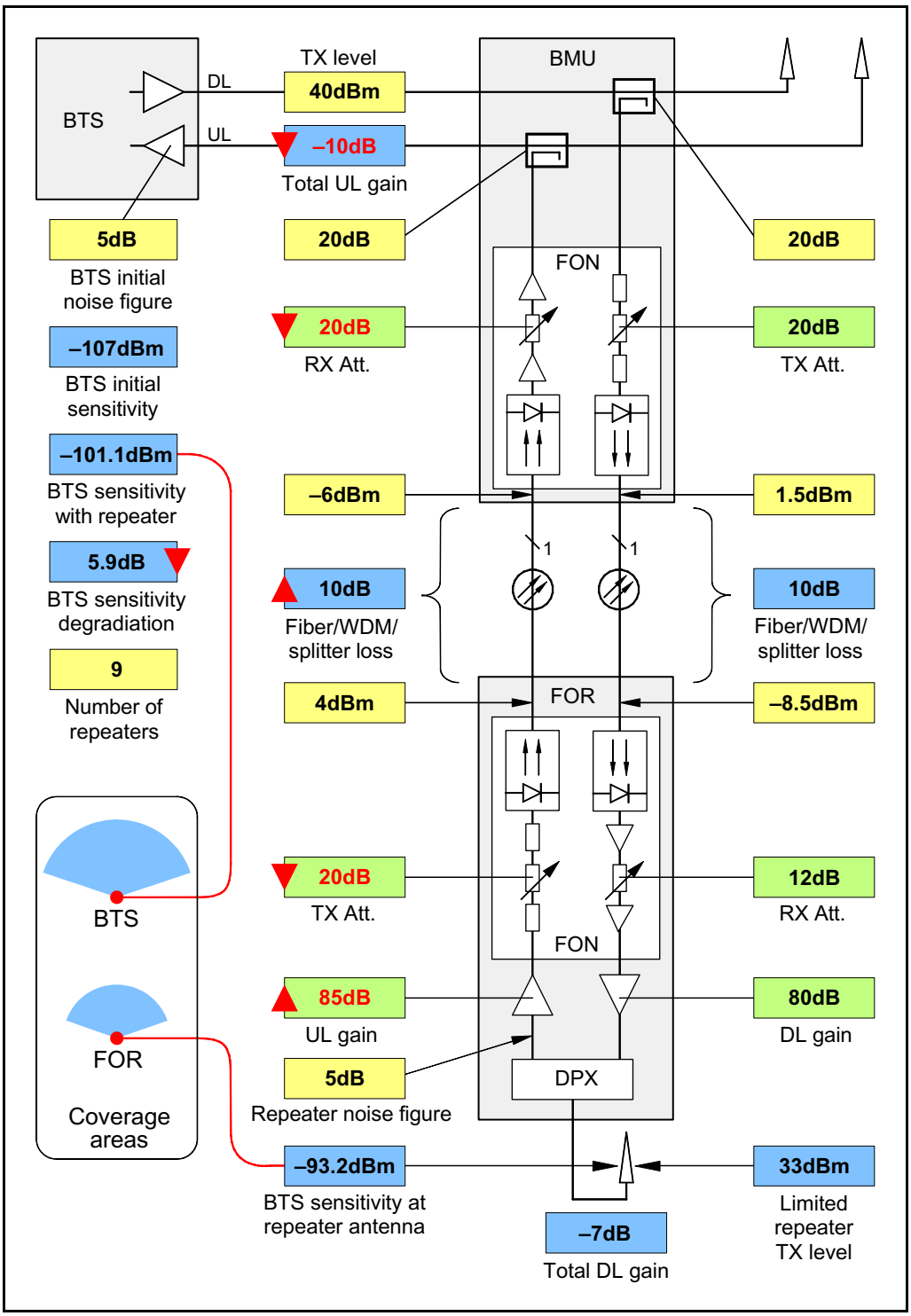

Figure 6-11. Nine FORs, high optical loss, low total uplink gain

Figure 6-11 shows one of nine FORs connected to one of three FON units in the BMU with high optical loss, and an uplink attenuation adapted to the optical loss. The *BTS sensitivity degradation* is low.

Low total uplink gain decreases the *BTS sensitivty with repeater* under the *BTS sensitivity at the repeater antenna* level, indicating a larger coverage area for the BTS than for the FOR.

7. Passive Devices

This chapter describes those passive components that are used to build optical fiber networks with two or more nodes.

These devices are:

- OSP, Optical splitters, page 7-2.
- WDM, wavelength division multiplexers, page 7-4.
- Fiber optic cables, page 7-6.
- Fiber optic connectors, page 7-9.

OSP, Optical Splitter

This section describes those types of optical splitters that are used to build repeater fiber networks. These are variants of three port optical splitters, also called beamsplitters or tee couplers.

After the general description, the graphic symbol for the optical splitter, and two examples of splitter usages are found.

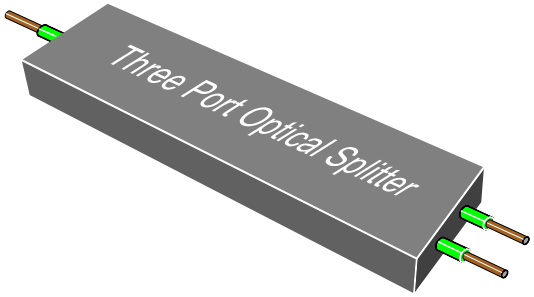

Figure 7-1. Three port optical splitter

The optical splitter is used to split an optical signal in a common fiber port into two or more output fiber ports, and the other way around, that is to combine the signals from two or more input ports into one common port.

Optical splitters have to be used to interconnect more than two units in a fiber network. The signal power in the splitter output ports is divided, reducing the signal magnitude in each of the ports.

The signal magnitude reduction, or power loss, for the common types of optical splitters for repeater networks are found in the following table.

Splitter type	Loss
50/50 percent	3dB for each of the ports due to the specification. Typical loss is between 3.2dB and 3.5dB.
30/70 percent	5.2dB in the 30% port. 1.5dB in the 70% port.

Additional loss for optical connectors is approximately 0.5dB per connector.

The table indicates that a 50/50 percent splitter divides the signal power from the common fiber equally between the output fibers. The splitter has the same loss in the reverse direction.

A 30/70 percent splitter divides the signal power from the common fiber in a part with 30% of the common power and another part with 70% of the common power. The splitter has the same loss in the reverse direction.

Other types of splitters, such as 90/10, 95/5, and 99/1 percent are not used for repeater networks.

Graphic Symbol

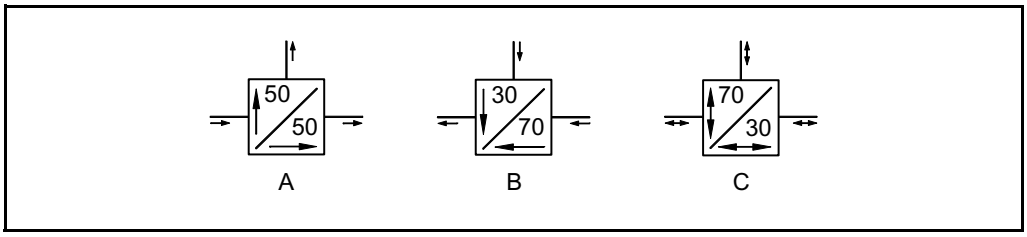

Figure 7-2. Optical splitter graphic symbol

Figure 7-2 shows the following three variants of an optical splitter graphic symbol (according to the EIA/TIA-587):

A – A 50/50 percent splitter used for simplex splitting, from the common fiber to the two output fibers.

B – A 30/70 percent splitter used for simplex combining, from the two input fibers to the common fiber.

C – A 30/70 percent splitter used for duplex splitting/combining between the common fiber and the two input/output fibers.

Examples

These examples illustrate two networks using optical splitters.

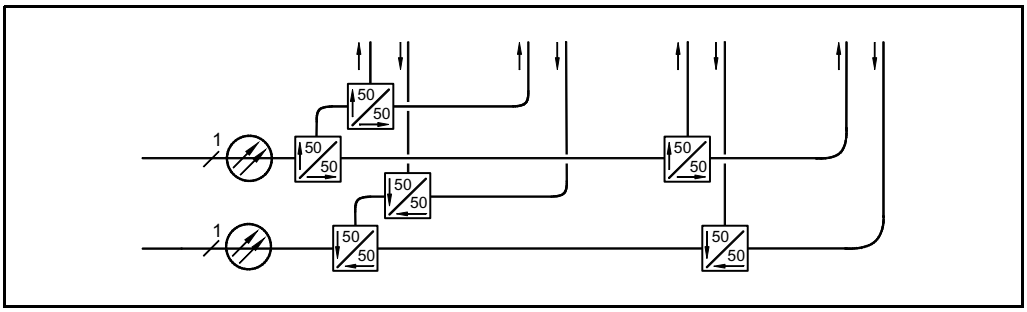

Figure 7-3. Optical splitters in a simplex network

Figure 7-3 shows a simplex network using optical splitters. The common fiber is divided into four output parts with 25% of the common power each.

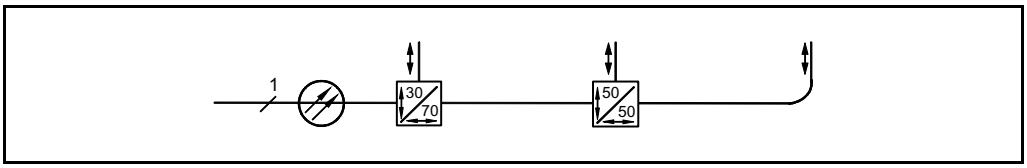

Figure 7-4. Optical splitters in a duplex network

Figure 7-4 shows a duplex network using optical splitters. The common fiber is divided into three parts with 30 – 35% of the common power each.

WDM, Wavelength Division Multiplexer

This section describes those types of optical multipexers that are used to build repeater fiber networks. These are 1310nm and 1550nm WDMs.

After the general description, the graphic symbol for the multiplexer, and an example of WDM usage are found.

Figure 7-5. Three port WDM, Wavelength Division Multiplexer

A WDM is used to split two or more signals of different wavelengths in a common fiber port into two or more output fiber ports, and the other way round, that is to combine signals of different wavelengths from two or more input ports into one common port.

The WDM has a very low insertion loss, approximately 1dB. Additional loss for optical connectors is approximately 0.5dB per port.

The WDM has two important characteristics, *crosstalk* and *channel separation*.

- *Crosstalk*, also called *directivity*, is the WDM's ability to separate the demultiplexed channels. Each channel should appear only in the intended output port, not in any other output port. The crosstalk or diversity specification is thus a measurement of the channel isolation.
- *Channel separation* is the WDM's ability to distinguish different wavelengths. In most WDMs, the wavelengths used has to be widely separated.

There are two different ways to use WDMs with 1310 and 1550nm wavelengths. They can be used for single direction dual signal transmission, or for bi-directional transmission, see the following sections.

There are WDMs with a channel separation of 2nm, which is shown in the example further ahead in this section.

There is also a CWDM type (Coarse WDM) that has a channel separation of 20nm. This type of CWDM with a wider channels spacing can be used for laser emitters that have high spectral width or thermal drift. CWDM systems support transmission distances up to 50km.

Bi-directional transmission

Bi-directional, or duplex, transmission can be used to simultaneously communicate in both directions over the same fiber.

Figure 7-6 shows the principle of this communication type.

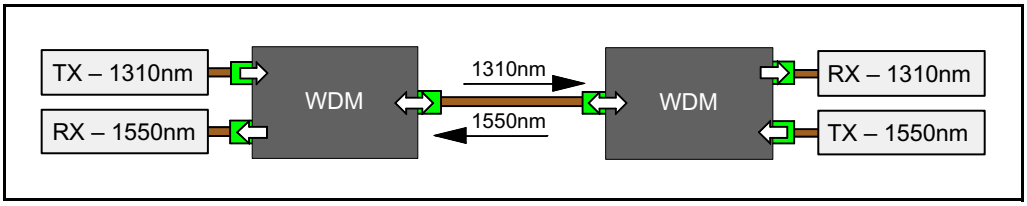

Figure 7-6. Bi-directional transmission

Graphic Symbol

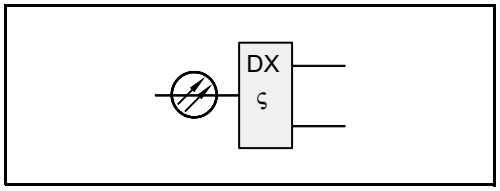

Figure 7-7. WDM graphic symbol

Figure 7-7 shows the graphic symbol for the optical WDM, Wavelength Division Multiplexer (according to the EIA/TIA-587).

Example

This example illustrates a duplex transmission using WDMs and optical splitters.

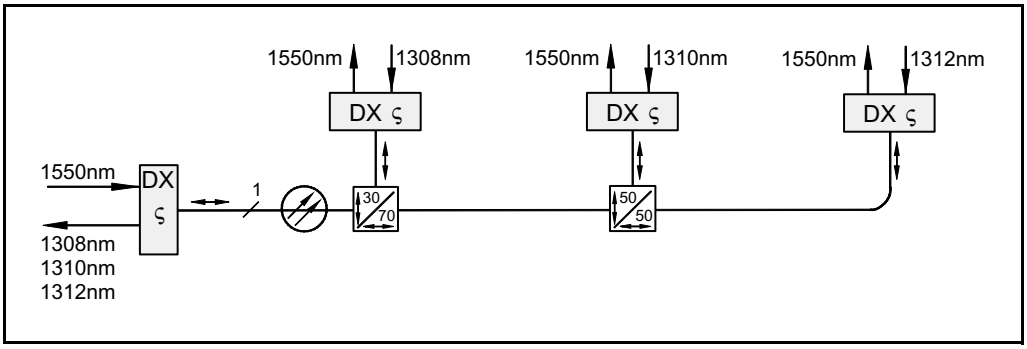

Figure 7-8. Duplex transmission with WDMs

Figure 7-8 shows a duplex fiber network with different wavelengths for downlink and uplink. The master unit transmits 1550nm and receives 1308nm, 1310nm, and 1312nm from the three slave units.

Fiber Optic Cables

Fiber optic 9/125µm single-mode patch cables for Powerwave repeaters are normally delivered with the system.

Recommended backbone cables: Single-mode 9/125µm fiber optic cables.

Single-mode 9/125µm fiber optic cables have a very good bandwidth-distance product and a low cable loss, see below.

To add cable length, permanent splices are generally used outside buildings while connectors are generally used inside buildings. Permanent slices are described below, connectors are described in the next section.

Bandwidth-distance product

The bandwidth-distance product (MHz 1 km) for this cable type is higher than 20,000 for both 1310nm and 1550nm. As a comparison, a 50/125µm multi-mode cable has a product between 300 and 1,500.

Cable loss

The cable loss is found in the following table.

Wavelength	Loss
1310nm	0.35dB per kilometer.
1550nm	0.20dB per kilometer.

Additional loss for optical connectors is approximately 0.5dB per connector.

The following diagram illustrates the attenuation differences between some copper coaxial cables and the single-mode fiber cable.

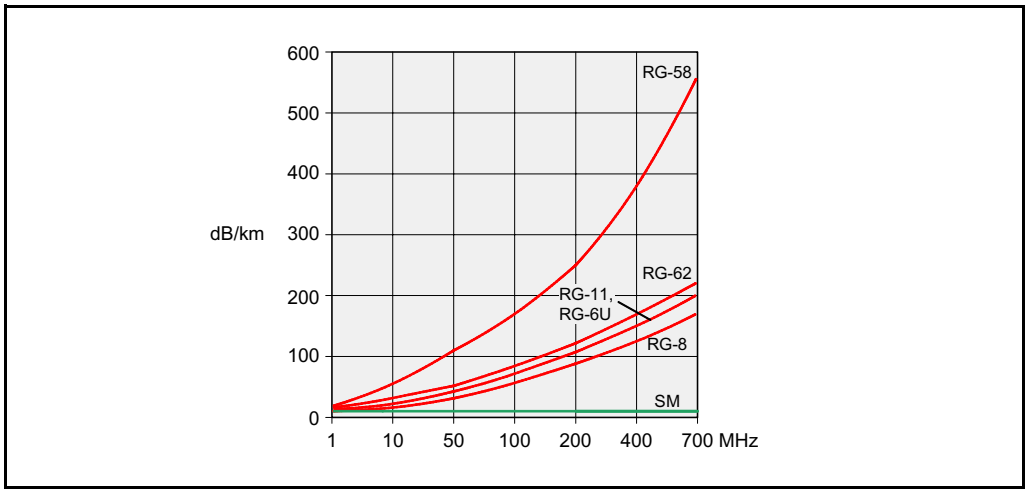

Figure 7-9. Attenuation for copper coaxial cables and fiber cable

Figure 7-9 shows the attenuation for RG-58, RG-62, RG-11, RG-8, RG-6U and single-mode fiber (SM).

The best of the copper coaxial cables, RG-8, has an attenuation of approximately 100dB/km at a frequency of 300MHz. This means that only 0.00000001% of the source power remains after a distance of 1km. In a 1550nm single-mode fiber cable of the same length, approximately 95% of the source power remains. This example is applicable for a splice-less cable with no other devices connected.

Miscellaneous fiber cable characteristics

Minimum bend radius for this cable type is 12mm.

The operating temperature range for the most common 9/125µm fiber cabels is –60°C to +85°C. The lowest temperature causes more trouble than the highest temperature.

Permanent splices

When a fiber cable has to be lengthened, the lowest attenuation and backreflection is obtained by performing a permanent fiber to fiber splice. Connectors can be used for the same purpose, but normally they have higher attenuation and backreflection. Permanent splices are also less expensive.

There are two main types of permanent fiber to fiber splices, *fusion splice* and *mechanical splice*.

Fusion splice

Fusion splice implies that the two cleaved fiber ends are butted together and heated until they fuse. To be able to perform this type of splice, a *fusion splicer* is required. This device has, in addition to an alignment and welding mechanism, also camera or microscope for supervision of the alignment and fuse procedures, and instruments to measure the power through the fiber splice.

The attenuation through a correctly performed fusion splice can be as low as 0.05dB.

Mechanical splice

Mechanical splice implies that the two cleaved fiber ends are joined into a structure, or fixed together with epoxy. To be able to perform this type of splice, a splicer device is required, which is less expensive than a *fusion splicer*.

The easiest way to perform a mechanical splice is to use a thin capillary tube in which the two fiber ends are inserted until they are in contact with each other. This method is called *capillary splicing*.

A mechanical splice may have a slightly higher loss and backreflection than a fusion solice. There is, however, index-matching gel to reduce this loss and backreflection.

Powerwave Patch Cables

Powerwave can provide a number of fiber patch cables with connectors for various applications. The following list contains some examples of these fiber cables.

Connector A	Connector B	Length	Part #
DIN/APC	DIN/APC	2m	PM403 07/4
DIN/APC	DIN/APC	5m	PM403 07/2
DIN/APC	DIN/APC	10m	PM403 07/1
DIN/APC	DIN/APC	25m	PM403 07/3
DIN/APC	FC/APC	2m	PM403 01/4
DIN/APC	FC/APC	5m	PM403 01/2
DIN/APC	FC/APC	10m	PM403 01/1
DIN/APC	FC/APC	25m	PM403 01/3
DIN/APC	FC/PC	2m	PM403 02/4
DIN/APC	FC/PC	5m	PM403 02/3
DIN/APC	FC/PC	10m	PM403 02/1
DIN/APC	FC/PC	25m	PM403 02/2
DIN/APC	SC/APC	10m	PM403 05/1
DIN/APC	SC/PC	10m	PM403 04/1
DIN/APC	ST	2m	PM403 03/2
DIN/APC	ST	10m	PM403 03/1
FC/APC	FC/APC	2m	PM403 09/1
FC/APC	FC/APC	10m	PM403 09/2
FC/PC	FC/APC	10m	PM403 06/1

As the number of cable lengths and connector combinations grow, please contact your nearest Powerwave representative for information about currently available cables.

Fiber Optic Connectors

There are a number of fiber optic connector types that have different charactersistics, advantages, and disadvantages. There are, however, three basic connector parts that all of these types have in common. These are the connector body, the ferrule, and the coupling device.

Figure 7-10 illustrates a typical fiber connector in which these three parts, and other main parts, are pointed out.

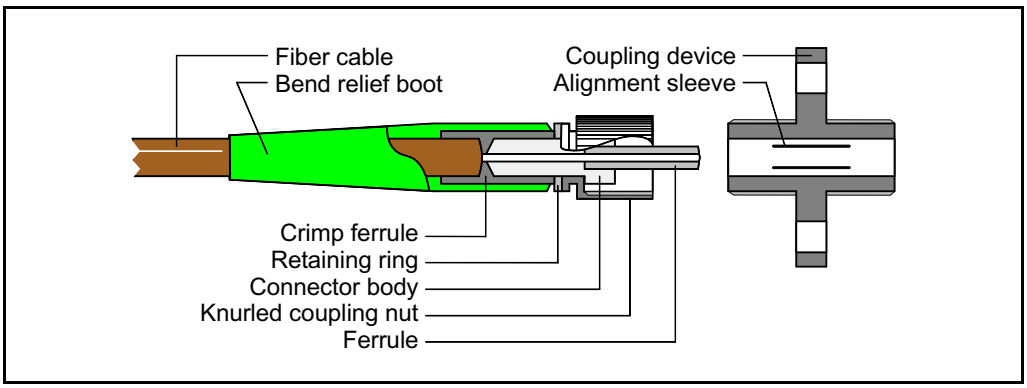

Figure 7-10. Typical fiber optic connector

Connector body

The connector body, or connector housing, holds the ferrule in a center line of the connector. The connector body is generally made of metal or plastic and it can consist of one or many pieces.

Ferrule

The ferrule holds and align the fiber. The ferrule is, when inserted in the coupler, guided by an alignment sleeve to the right position to meet the connected fiber with a minimum of misalignment.

The ferrule end and the fiber end are aligned in the same plane. The fiber face is polished in this plane to minimize power loss. Hackles, lips, fractures, and dirt at this face cause scattering and thus power loss.

Ferrules are typically made of metal or ceramic, but can also be made of plastic.

Coupling device

A coupling device, such as an alignment sleeve, is used instead of male and female connectors common to electric devices.

Fiber optic transmitters and receivers, as well as splitters and WDMs, often have the coupling devices built-in and can thus be connected with applicable cable connectors.

Connector insertion loss

All connectors have an insertion loss of 0.5dB.

Connector Types

The most common fiber optic connectors for Powerwave repeaters are briefly described below.

DIN

These are keyed, spring-loaded connectors with floating sleeves in the couplers. They have threaded coupling nuts.

DIN/APC, see *APC connectors* below.

FC

The ferrule in a FC connector has face contact (FC) with the joined connector. This type has a threaded coupling nut.

FC/APC, see *APC connectors* below.
FC/PC, see *PC connectors* below.

SC

The subscription channel (SC) connector is a push-pull connector that gives a click sound when pushed in or pulled out. The ferrule in this connector is decoupled from the cable and the connector body, which means that the ferrule is not affected by cable touches.

SC/APC, see *APC connectors* below.
SC/PC, see *PC connectors* below.

ST

The straight tip (ST) connector has a spring-loaded bayonet coupling that makes the ferrule not rotate during connection, which means that the insertion loss is consistent.

APC connectors

All APC connector types are angle polished connectors (APC). In such a connector, the ferrule with the fiber end face is not at straight angle to the fiber center axis (typical deviation for the connectors used is 8° but a deviation of 5° to 15° is common). These connectors have a low backreflection.

PC connectors

All PC connector types have the ferrule with the fiber end face polished in a certain curve for physical contact (PC). These connectors have a low backreflection.

E2000 connectors

The E2000 connector has a ceramic ferrule and a moulded plastic body that includes a push-pull latch mechanism. This connector has a spring loaded protective cap over the ferrule that protects the fiber end face from dirt and dust and also protects from laser emission.

Handling Connectors

Always have in mind that the fiber area in a fiber optic connector is very small. The diameter of the fiber in a single-mode connector is only 9µm. Compared to a human hair, which is between 50 and 75µm, the fiber diameter is only about a seventh of that diameter.

This means that a very small particle on the fiber end face causes trouble. A dust particle, 1µm in size, can suspend indefinitely in the air. On the fiber end face in a connector, this particle can cause a loss of 1dB. A 9µm dust particle can completely put an end to the signal.

Dust particles are usually 20µm or larger in diameter.

This makes it necessary to cover and clean optical connectors as described below.

Covering

An optical connector that is not in use must always be covered.

If, for example, an unprotected connector is dropped, the fiber end face may be damaged when it reaches the floor.

A protection boot is usually provided by the connector manufacturer. It should protect the entire connector, but at least the ferrule.

Cleaning

Always clean optical connectors immediately before inserting them into the coupling ports. But, wait until the cleaning liquid has get absolutely dry.

Use the following cleaning equipment:

- Fiber cleaning cloths.
- Denaturated alcohol.
- Canned dry air.
- 30X microscope (for cleaning verification).

Clean as follows:

1. Ensure the laser transmitter is off.
2. Clean by using a cleaning device.

   Or:

   – Saturate the fiber cleaning cloth with alcohol and clean the entire connector, especially the ferrule with the fiber end face. The cloth must not be dry.

   – Verify the cleaning result by using the microscope.

   – Canned air can be used to remove particles from the coupling port. Do not use cleaning liquid in the coupling port.

   – Never touch the fiber end face.

8. Troubleshooting

This troubleshooting guide is applicable to a BMU connected to a BTS. The BMU is also the master unit in a fiber optic network built-up with FON units, one in the BMU and one in each of the connected repeaters.

This guide assumes that no gateway is available in the repeater network, and that alarms are indicated via an alarm relay in the BMU.

At the BMU site

1. Inspect the BTS and BMU sites.

   If a general inspection of the BTS site does not explain the cause of the error, then open the cabinet of the BMU.

2. Check the power in the BMU.

   This includes the BMU power supply and the fuse in the distribution panel.

   If a replacement of the PSU does not solve the problem, then check the power distribution cable from the PSU to the FON unit.

3. Check the red FAULT and the green FLI/F2F indicators.

   If neither the red FAULT indicator in the BMU or the green FLI/F2F indicator are blinking, then the FON unit is not communicating properly with any of the remote repeaters.

   If there are more than one repeater in the repeater network, then the problem is most likely related to the fiber at the BMU site, or the fiber cable between the BMU and the repeaters.

4. Measure the received uplink 1310nm optical power from the repeater at the patch cables in the BMU.

   If the measured optical power is higher than –10dBm, then proceed with step 5.

   If there is no optical power, then check the signal power at the patch panel.

5. Measure the optical uplink power at the RX port of the current FON unit.

   If the signal power is OK, then proceed with step 6.

   If there is no power in the RX port, then clean the connectors and measure again.

   If there is still no power in the RX port, then replace the FOU unit with the passive devices (keep the FON board). The problem is very likely related to a misfunctioning splitter or WDM.

6. Measure the optical downlink transmitting power at the TX port of the same FON unit.

   If the signal power is not OK, then replace the FON board.

At the repeater site

7. Repeat from step 2 to step 6 but now in the repeater.

8. If there are further repeaters in the network, then measure the optical output power to the next repeater.

   If there is no power, then the problem most likely refers to the optic splitter. Replace the FOU unit with the passive devices (keep the FON board).

   A misfunctioning splitter can also be the cause of lost repeaters between the BMU and the current site.

9. As soon as the optical system works, log on to the repeater and read the RF information in the event log.

   If the error is caused by the RF system, then copy all settings from the current RF unit into a new RF unit and replace the RF unit.

   The quickest way to determine if the RF level is OK in the repeater is to log on to the repeater and check the RSSI values for the BCCH channel. This value should be between –40dBm and –50dBm.

   If the RSSI value is not between these values and the FON unit works properly, then measure the RF level from the FOU to the repeater DC coupler using a sitemaster, spectrum analyser, or similar.

   If the loss is 20dB or more, then the LNA amplifier or the DPX filter is misfunctioning.

Index

A

Abbreviations v
APC connectors 7-10

B

BATT, green LED 3-7
Beamsplitter 7-2
BOOT, red LED 3-7

C

Capillary splicing 7-7
CHARGE, yellow LED 3-7
Commissioning 6-1

D

DATA, blue LED 3-7
DIN connectors 7-10

E

E2000 connectors 7-10
ESD 1-6

F

FAULT, red LED 3-7
FC connectors 7-10
Fiber-Optic Node 3-1
FLI 5-2
FLI, green LED 3-6
F-link 5-2
F-net 5-2
F-net characteristics 5-4
FON 3-1
FON operational control 3-11
FON unit 5-6
Fusion splice 7-7
Fusion splicer 7-7

G

Graphic symbol, optical splitter 7-3
Graphic symbol, WDM 7-5

I

Introduction 2-1
IP 5-2
IP network 5-1
IP network requirements 5-3
IP terminology 5-2

L

Link 5-2

M

Mechanical splice 7-7

N

Net and link 5-2
Node units 5-5

O

OPER, green LED 3-7
Operational control, FON 3-11
Optical splitter 7-2
Optical splitter graphic symbol 7-3
OSP 7-2

P

PC connectors 7-10
Port section
    LOCAL O&M 3-9
Ports
    P101 RF input 3-8
    P102 RF output 3-8
    P103 RF low power output 3-8
    P104 Debug 3-9
    P105 Front LED indicators 3-9
    P106 PC 3-9
    P108 Power 3-9
    P109 Alarm 3-9
    P110 W-link jumper 3-10
    P111 WLI 3-10
    P112 WLI 3-10
    P113 Batteries 3-10
    P114 Backup power output 3-10
    P115 Future port 3-10
    P116 Power 3-9
    P130 RCC 3-10
    RX 3-8
    TX 3-8
POWER, yellow LED 3-7

Q

Questionnaire Q-1

R

R2R 3-4, 5-2
R2R net 5-2
R2R terminology 5-2

S

Safety 1-1
    beryllium oxide 1-1
    electric shock 1-1
    hydrogen fluoride 1-1
    laser transmitter 1-2

lithium battery 1-1
polytetrafluoro ethylene 1-1
PTFE 1-1
SC connectors 7-10
Single-Mode Fiber 8-1
SLW 3-4, 5-2
ST connectors 7-10
Static electricity 1-6

T

Tee coupler 7-2
Terminology 5-2

W

Wavelength Division Multiplexer 7-4
WDM graphic symbol 7-5
WLI 3-4, 5-2
WLI, green LED 3-7
W-link 5-2
W-net 3-4, 5-2

Questionnaire

The aim of this manual is to guide you when installing and operating the Powerwave repeaters, and to answer questions that may turn up. To ensure that we provide appropriate information for these purposes, we would appreciate your views and suggestions on how to improve the manual in this direction. Please, fill out the following questionnaire and send it to us.

1

Have you read entire sections or do you use the manual to look up specific information when needed?

❑ Read entire sections ❑ Look up specific information

Comments: _____

_____

_____

2

Do you think the information is easy to find and understand?

❑ Yes ❑ No

Comments: _____

_____

_____

3

Do you find any function of the Powerwave repeater hard to understand, a function which should be subjected to more detailed description?

❑ Yes ❑ No

If yes, which one: _____

_____

_____

4

Do you have any suggestions on how we can improve this manual?

_____

_____

_____

Title (Mr/Ms/Other): _____ Initial: _____

Surname: _____ Job title: _____

Company: _____ Address: _____

City: _____ Country: _____ Phone: _____

Thanks for your kind help. It's very valuable to us.

POSTAGE
STAMP

Powerwave Technologies Sweden AB

Customer Care

SE-187 80 Täby

Sweden

If you prefer to send by mail, fold here and tape.
No envelope required.

If you prefer to send by fax, use this number: +46 8 540 824 85