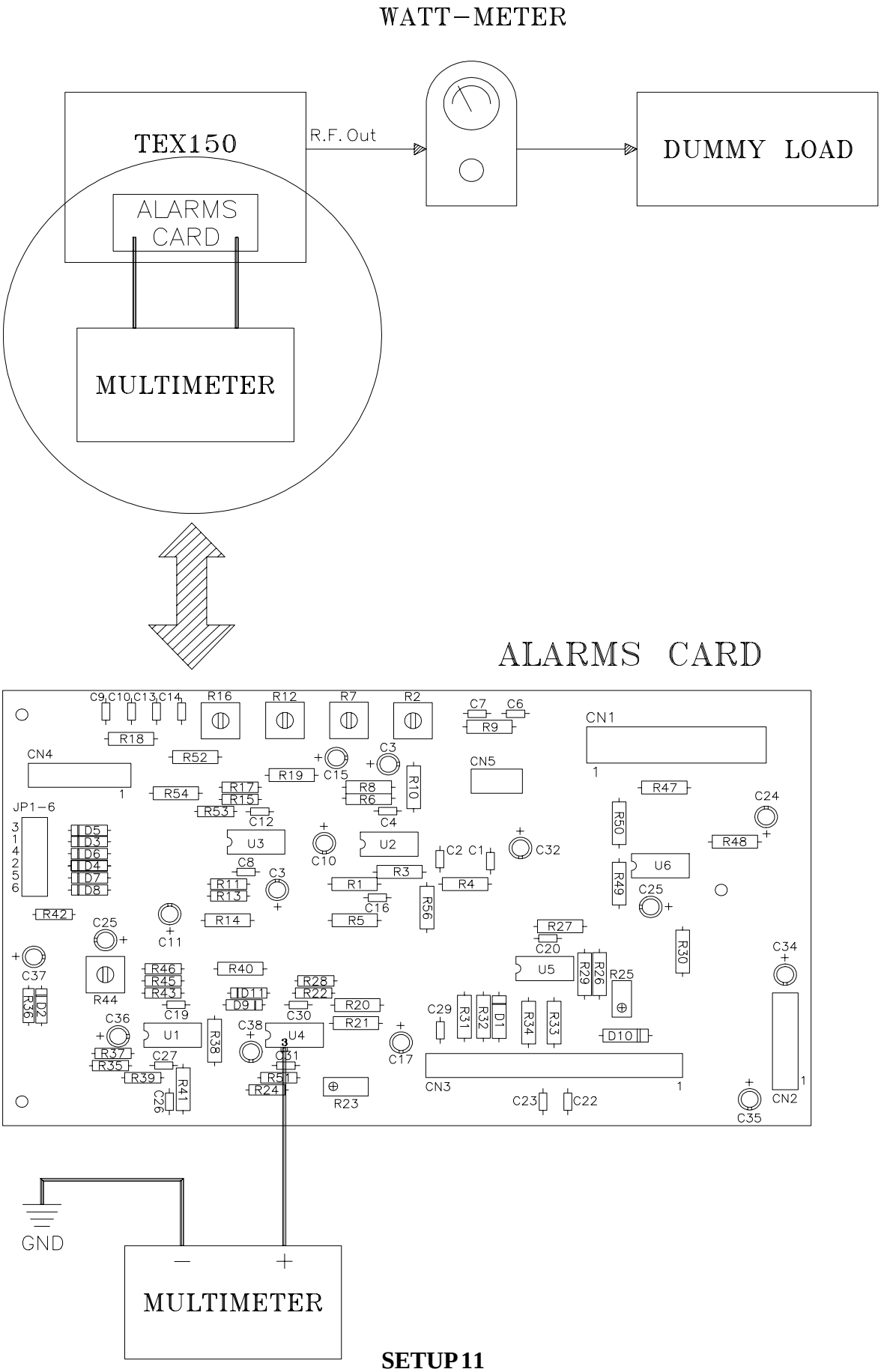
WATT-METER
TEX150
R.F. Out
DUMMY LOAD
ALARMS CARD
MULTIMETER
ALARMS CARD
GND
MULTIMETER

SETUP 11

F) Maximum Output Power Adjustment

Can be necessary to set maximum output power at maximum value included between 10 and 150W.

1)Connect a 50 ohm, 300W dummy load to the RF output.

2)Adjust output power at minimum turning PWR ADJ trimmer (9 Fig.1A or 5 Fig.1B) completely anticlockwise and then switch on the equipment.

3)Increase output power until 150W turning PWR ADJ trimmer (9 Fig.1A or 5 Fig.1B) clockwise.

4)Turn trimmer R44, until to have maximum output power presetted on external wattmeter.

5)Then, adjust output power turning PWR ADJ trimmer (9 Fig.1A or 5 fig.1B) and note that output power can be increased over presetted value.

NOTE: The jumpers shown in table , disable all protections (all enabled from firm). A no-correct use of these jumpers can cause seroius damage to the unit and will automatically make the warranty void.

ALARMS CARD TRIMMERS AND JUMPERS

REF.	***DESCRIPTION***
R2	*Internal AGC Adjustment*
R7	*Max Power Output Adjustment (VSWR INFINITE)*
R12	*External VSWR Threshold Adjustment*
R16	*External AGC Adjustment*
R23	*Temperature Threshold Adjustment*
R25	*Temperature Led Lighting Adjustment*
R44	*Max Power Output Adjustment*
JP1	*Internal AGC Insertion (DON'T REMOVE)*
JP2	*Internal AGC Insertion (DON'T REMOVE)*
JP3	*External VSWR Insertion*
JP4	*External AGC Insertion*
JP5	*Temperature Threshold Insertion*
JP6	*Maximum Output Power Threshold Insertion*

APPENDIX A

CIRCUIT DIAGRAMS, LAYOUTS AND BILLS OF MATERIAL

This section contains circuit diagrams, layouts and bills of material of the modules which composing the equipment. For more information about each module see as reference Section 2.

WIRING DIAGRAM

1	Mono/MPX Version	Pag. 49
2	Stereo Version	Pag. 48

TEX150 and TEX150/S Technical and Maintenance Manual

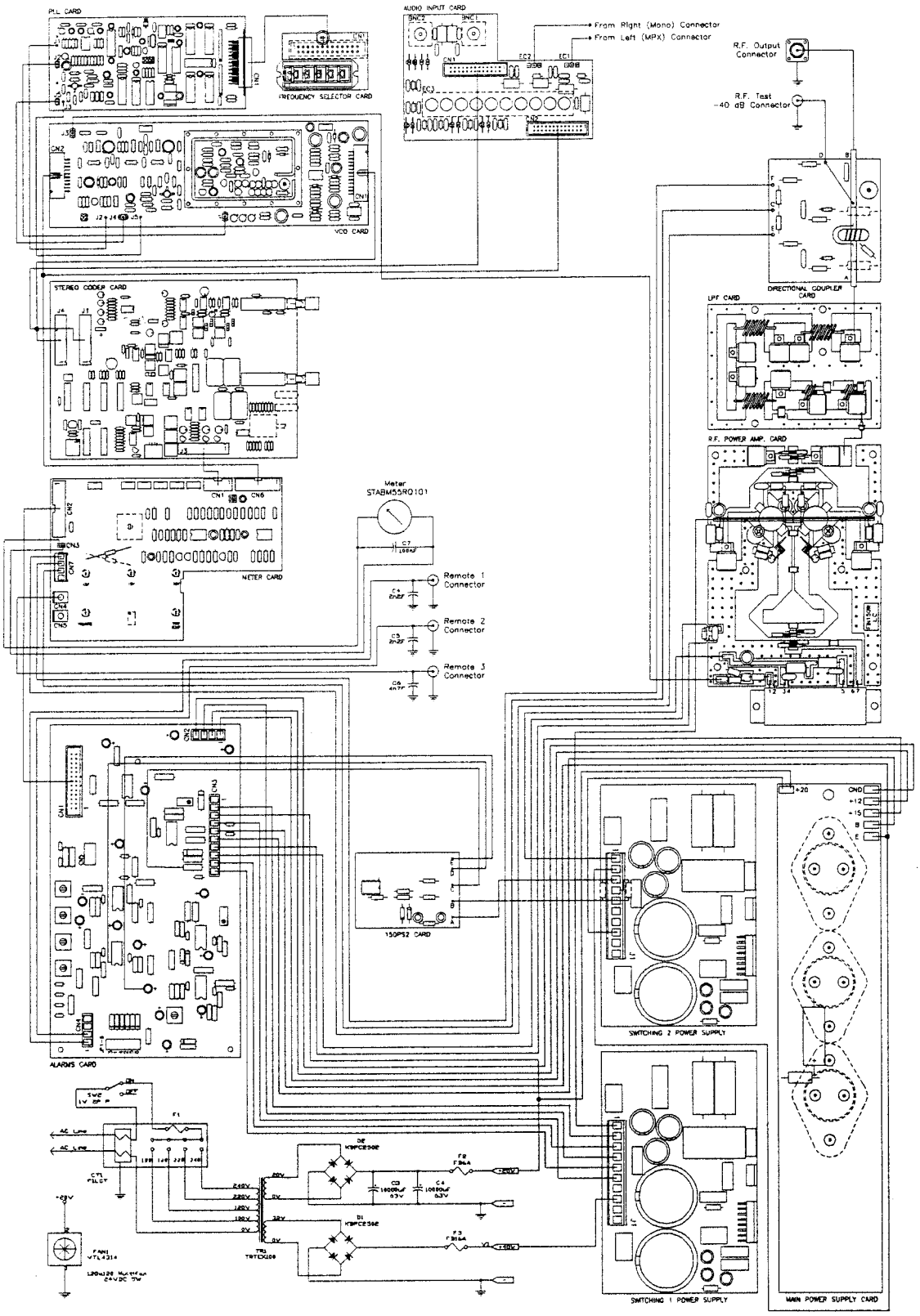

WIRING DIAGRAM -STEREO VERSION-

TEX150 and TEX150/S Technical and Maintenance Manual

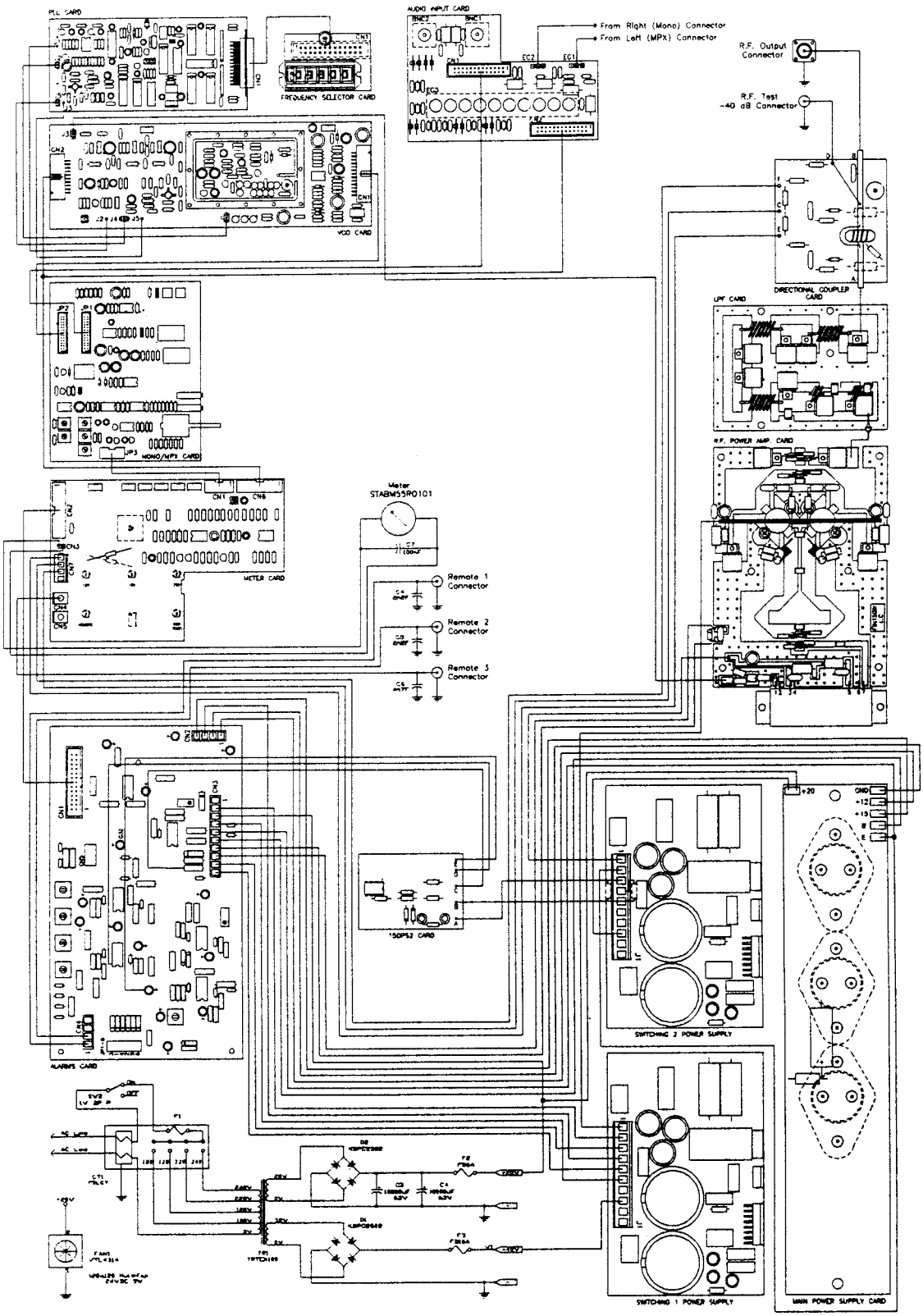

WIRING DIAGRAM -MONO/MPX VERSION-

AUDIO INPUT CARD

1	Circuit Diagram	Pag. 51
2	Bill of Materials	Pag. 52
3	Component Layout	Pag. 53

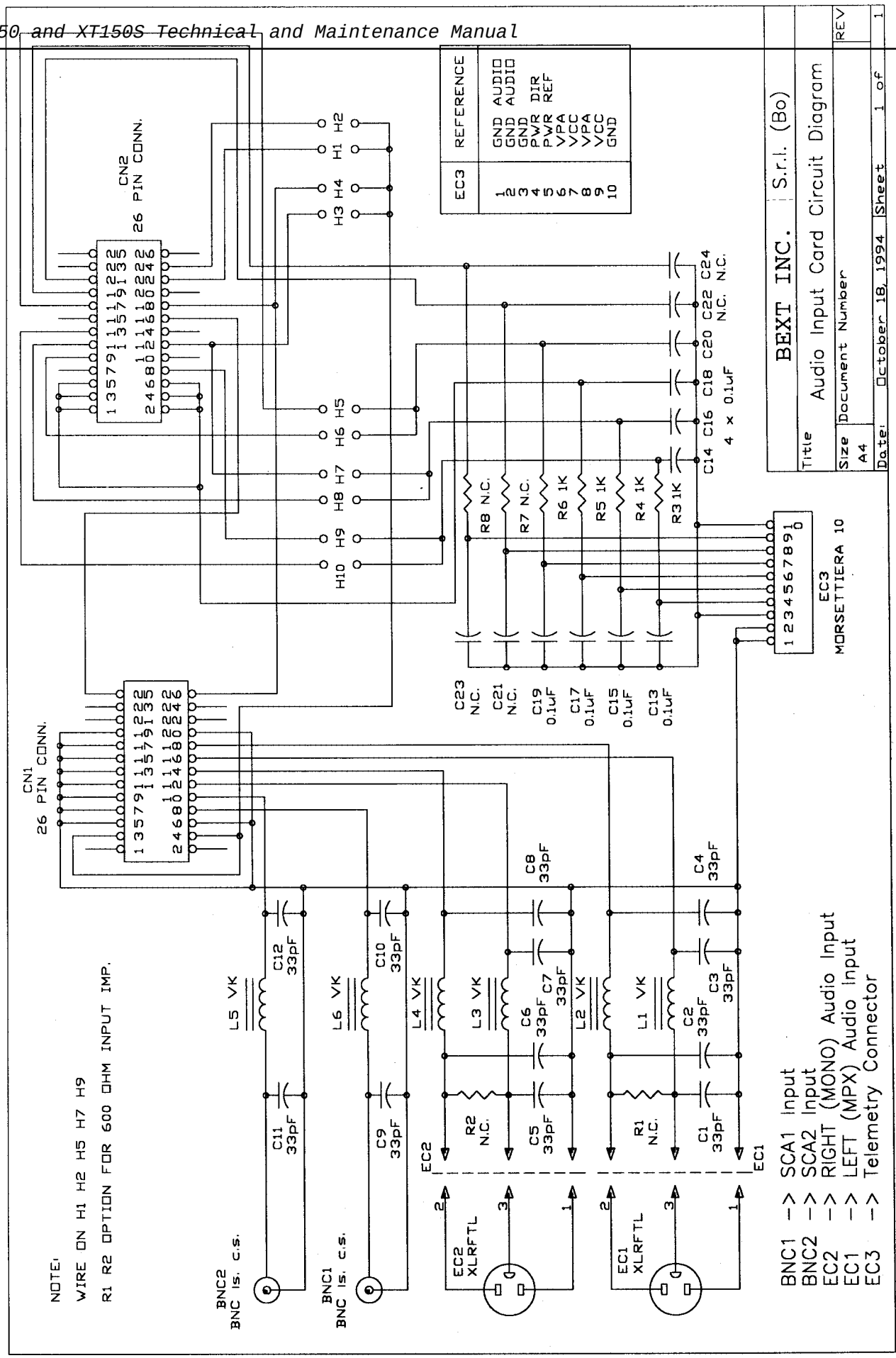
BEXT INC. S.r.l. (Bo)
Title Audio Input Card Circuit Diagram
Size A4
Document Number
REV
Date: October 18, 1994
Sheet 1 of 1
CN2 26 PIN CONN.
CN1 26 PIN CONN.
EC3 REFERENCE
1 GND AUDIO
2 GND AUDIO
3 GND
4 PWR DIR
5 PWR REF
6 VPA
7 VCC
8 VPA
9 VCC
10 GND
H1 H2 H3 H4 H5 H6 H7 H8 H9 H10
R8 N.C. R7 N.C. R6 1K R5 1K R4 1K R3 1K
C14 C16 C18 C20 C22 C24 N.C. N.C.
4 x 0.1uF
C23 N.C. C21 N.C. C19 0.1uF C17 0.1uF C15 0.1uF C13 0.1uF
EC3 MORSETTIERA 10
C8 33pF
C4 33pF
C12 33pF
C10 33pF
L5 VK L6 VK L4 VK L3 VK L2 VK L1 VK
C6 33pF C7 33pF C2 33pF C3 33pF
C11 33pF C9 33pF R2 N.C. C5 33pF R1 N.C. C1 33pF
EC2 EC1
BNC2 BNC 1s. c.s.
BNC1 BNC 1s. c.s.
EC2 XLRFTL
EC1 XLRFTL
NOTE:
WIRE ON H1 H2 H5 H7 H9
R1 R2 OPTION FOR 600 OHM INPUT IMP.
BNC1 -> SCA1 Input
BNC2 -> SCA2 Input
EC2 -> RIGHT (MONO) Audio Input
EC1 -> LEFT (MPX) Audio Input
EC3 -> Telemetry Connector

Audio Input Card Bill Of Materials Page 1

Item	Quantity	Reference	Part	Description	Part Order Code
1	4	R3,R4, R5,R6	1K	RESISTOR 1/4W 5%	RSC1/4JK0001
2	12	C1,C2,C3, C4,C5,C6, C7,C8,C9, C10,C11,C12	33pF	CERAMIC CAPACITOR NP0	CKM330BJ600C
3	8	C13,C14, C15,C16, C17,C18, C19,C20	0.1uF	CERAMIC CAPACITOR	CKM104BK600P
4	6	L1,L2,L3, L4,L5,L6	VK	RF CHOKE	IMPVK00A
5	2	EC1,EC2	XLRFTL	XLR FEMM. DA TELAIO	CNTXLRFP3P
6	1	EC3	MORSET. 10	MORSETT. TEL. 10 CONT.	MORSP10P
7	2	CN1,CN2	26 P CONN.	CONN. M 2*13 P 2.54	CNTMCSFC26P
8	2	BNC1,BNC2	BNC IS.CS.	CONN. BNC A STAMP. IS.	CNTBNCFCSIS
9	10	H1,H2,H3, H4,H5,H6, H7,H8, H9,H10	WIRE JUMP.	PONTICELLO A FILO	WIREJUMPER
10	8	R1,R2,R7, R8,C21,C22, C23,C24	N.C.	NOT CONNECTED	

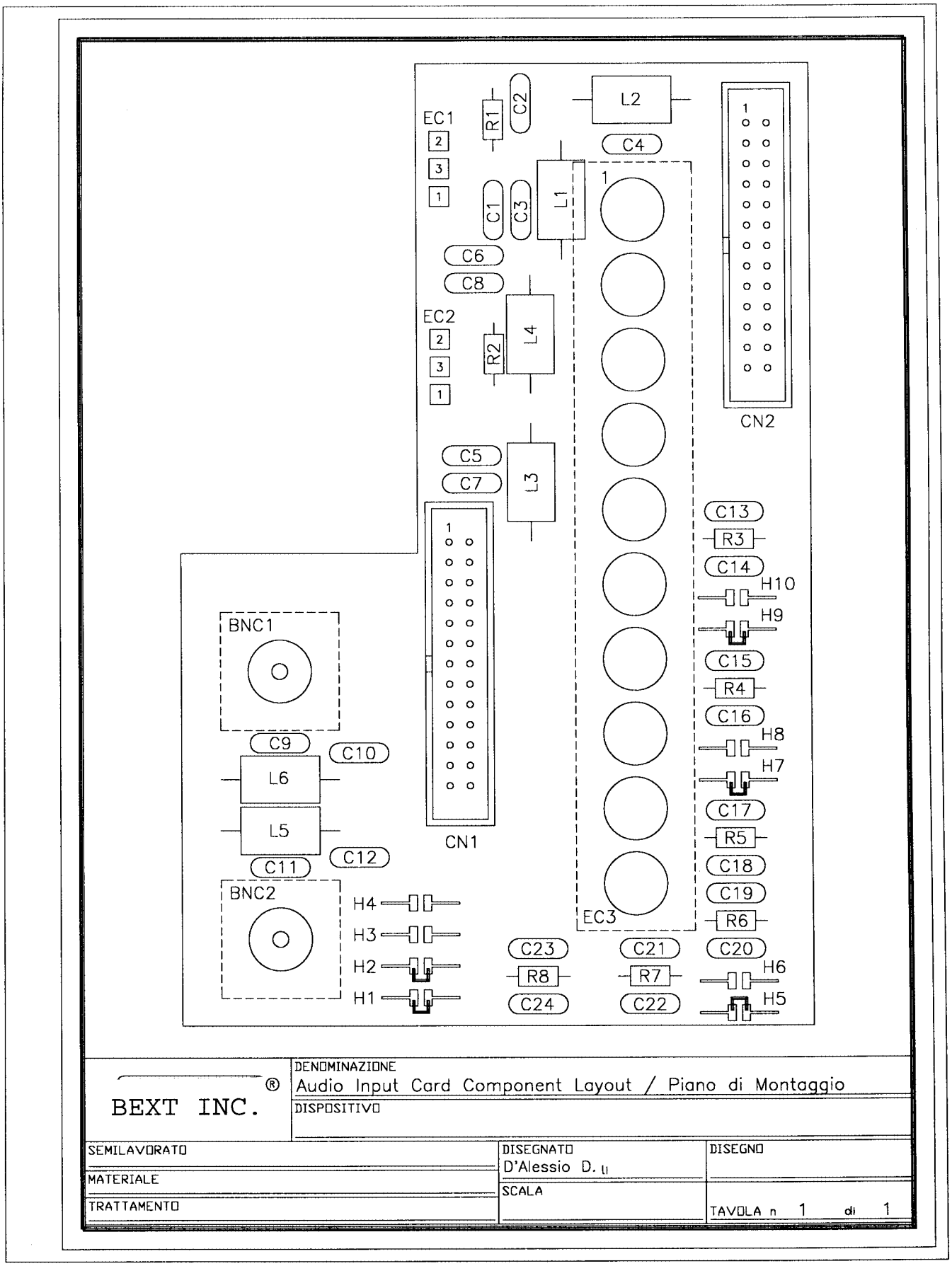
EC1
2
3
1
R1
C2
L2
C4
C1
C3
L1
C6
C8
EC2
2
3
1
R2
L4
CN2
C5
C7
L3
CN1
C13
R3
C14
H10
H9
BNC1
C15
R4
C16
H8
H7
C9
C10
L6
L5
C17
R5
C11
C12
C18
BNC2
C19
H4
H3
H2
H1
EC3
R6
C23
C21
C20
R8
R7
H6
C24
C22
H5
BEXT INC.
DENOMINAZIONE
Audio Input Card Component Layout / Piano di Montaggio
DISPOSITIVO
SEMILAVORATO
DISEGNATO
D'Alessio D.
DISEGNO
MATERIALE
SCALA
TRATTAMENTO
TAVOLA n 1 di 1

FREQUENCY SELECTOR CARD (Mod. TSW-1)

1	Circuit Diagram	Pag. 55
2	Bill of Materials	Pag. 56
3	Component Layout	Pag. 57

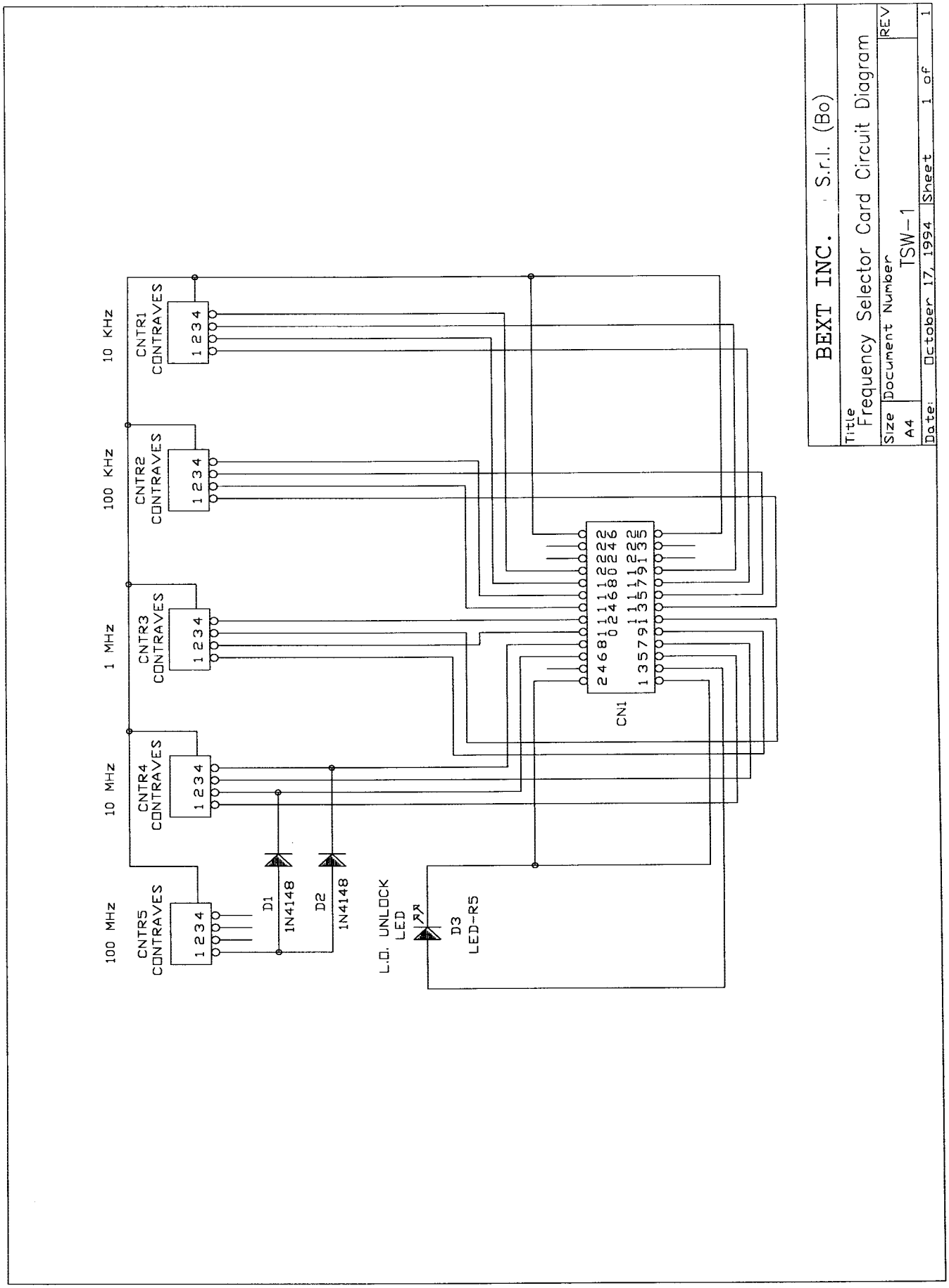
10 KHz
CNTR1
CONTRAVES
1 2 3 4
100 KHz
CNTR2
CONTRAVES
1 2 3 4
1 MHz
CNTR3
CONTRAVES
1 2 3 4
10 MHz
CNTR4
CONTRAVES
1 2 3 4
100 MHz
CNTR5
CONTRAVES
1 2 3 4
D1
1N4148
D2
1N4148
L.O. UNLOCK
LED
D3
LED-R5
CN1
2 4 6 8 1 1 1 1 2 2 2 2
0 2 4 6 8 0 2 4 6
1 3 5 7 9 1 3 5 7 9 1 3 5
BEXT INC. S.r.l. (Bo)
Title
Frequency Selector Card Circuit Diagram
Size
A4
Document Number
TSW-1
REV
Date: October 17, 1994
Sheet 1 of 1

Frequency Selector Card Mod. TSW-1 Bill Of Materials Page 1

Item	Quantity	Reference	Part	Description	Part Order Code
1	1	CN1	26 P CONN.	CONN. M 2*13 P 2.54	CNTMCSFC26P
2	5	CNTR1, CNTR2, CNTR3, CNTR4, CNTR5	CONTRAVES	COMMUTATORI BCD 15mm	COMBCD15
3	2	D1,D2	1N4148	SILICON DIODE	DIS1N4148
4	1	D3	LED-R5	RED LED DIODE	LEDRO05

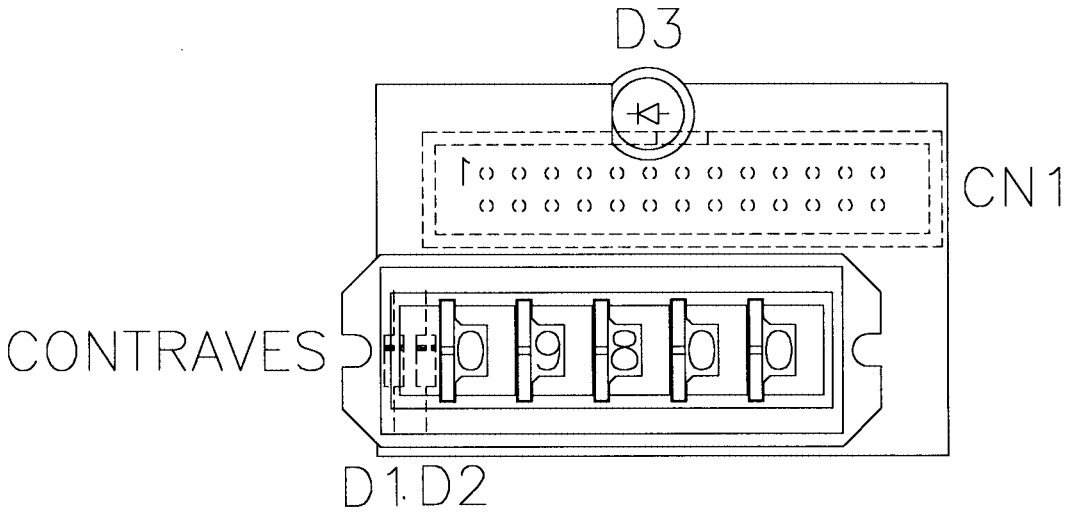

BEXT INC. ®	DENOMINAZIONE Frequency Selector Card Component Layout / Piano di Montaggio		
	DISPOSITIVO		
SEMILAVORATO		DISEGNATO D'Alessio D.	DISEGNO TSW-1
MATERIALE		SCALA	
TRATTAMENTO			TAVOLA n di

FREQUENCY SELECTOR CARD (Mod. TSW-2)

1	Circuit Diagram	Pag. 59
2	Bill of Materials	Pag. 60
3	Coponent Layout	Pag. 61

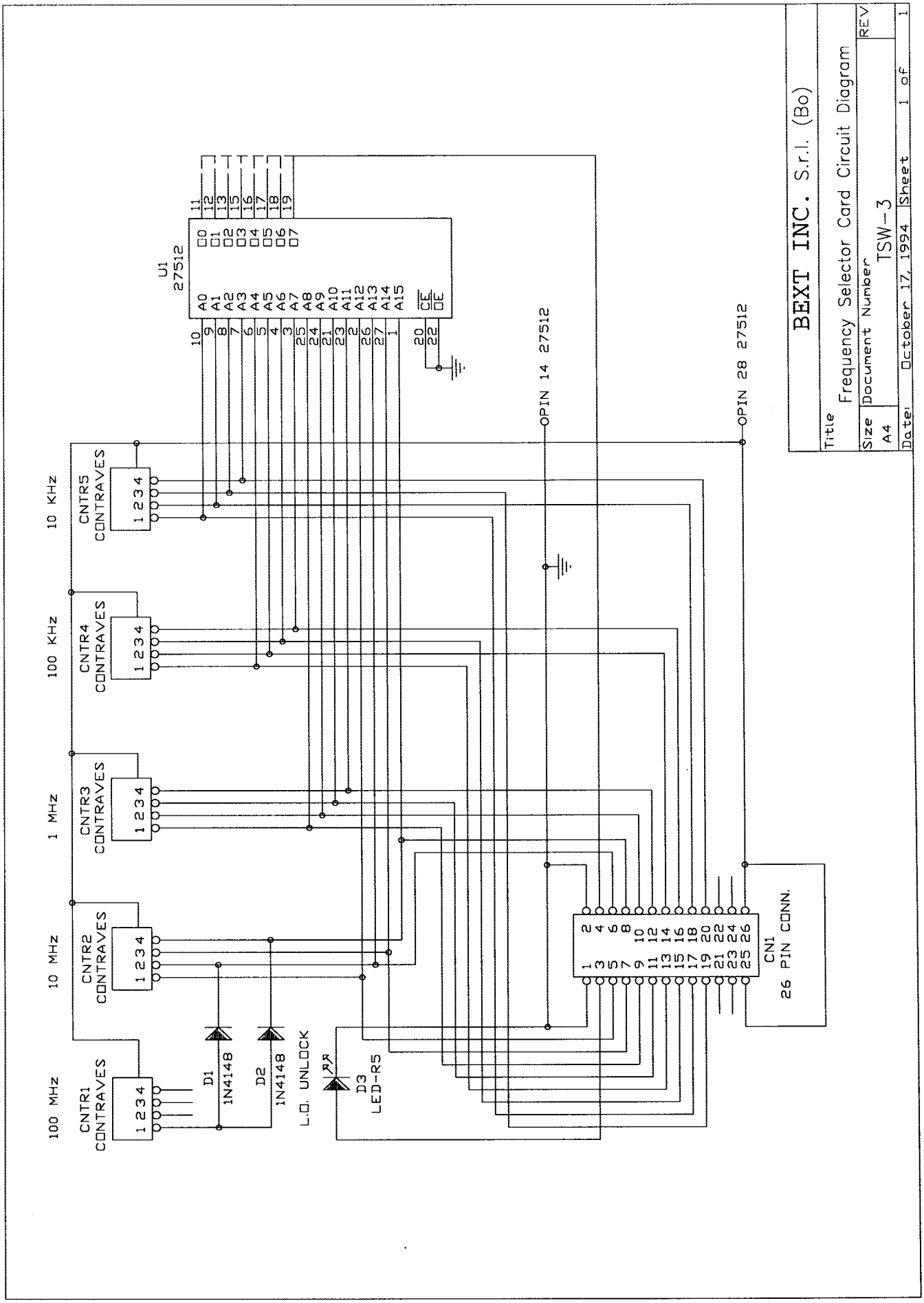
BEXT INC. S.r.l. (Bo)
Title
Frequency Selector Card Circuit Diagram
Size
A4
Document Number
TSW-3
REV
Date: October 17, 1994
Sheet 1 of 1
U1
27512
CNTR5
CONTRAVES
CNTR4
CONTRAVES
CNTR3
CONTRAVES
CNTR2
CONTRAVES
CNTR1
CONTRAVES
10 KHz
100 KHz
1 MHz
10 MHz
100 MHz
D1
1N4148
D2
1N4148
L.O. UNLOCK
D3
LED-R5
OPIN 14 27512
OPIN 28 27512
CN1
26 PIN CONN.

Frequency Selector Card Mod.T SW-3 Bill Of Materials Page 1

Item	Quantity	Reference	Part	Description	Part Order Code
1	1	CN1	26 P CONN.	CONN. M 2*13 P 2.54	CNTMCSFC26P
2	5	CNTR1, CNTR2, CNTR3, CNTR4, CNTR5	CONTRAVES	COMMUTATORI BCD 15mm	COMBCD15
3	2	D1,D2	1N4148	SILICON DIODE	DIS1N4148
4	1	D3	LED-R5	RED LED DIODE	LEDRO05
5	1	U1	27512	65,536x8 B CMOS EPROM	CID27512

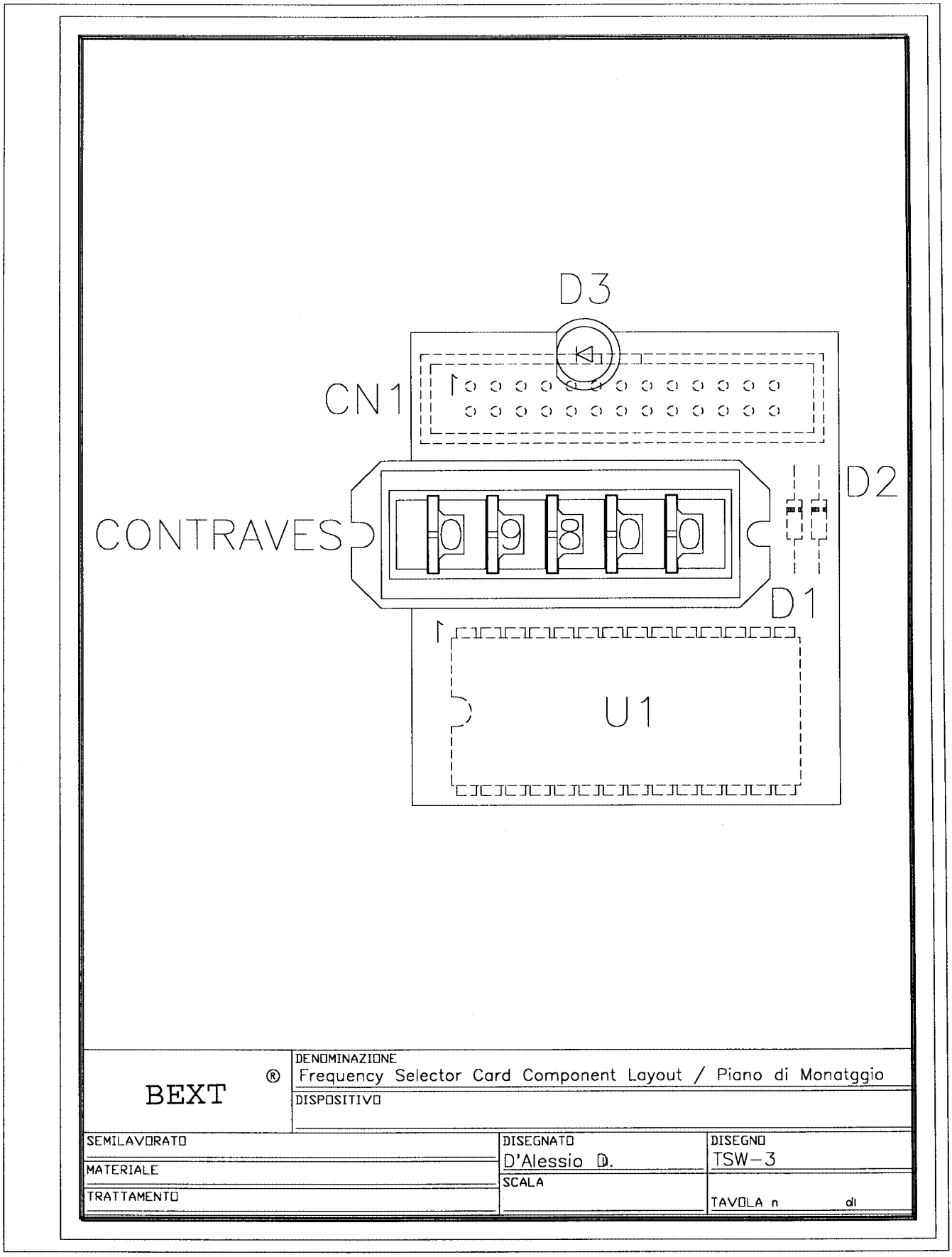
D3
CN1
D2
CONTRAVES
D1
U1
BEXT ®
DENOMINAZIONE
Frequency Selector Card Component Layout / Piano di Monatggio
DISPOSITIVO
SEMILAVORATO
MATERIALE
TRATTAMENTO
DISEGNATO
D'Alessio D.
SCALA
DISEGNO
TSW-3
TAVOLA n di

VCO CARD

1	A.F. Section Circuit Diagram	Pag. 63
2	A.F. Section Bill of Materials	Pag. 64
3	R.F. Section Circuit Diagram	Pag. 65
4	R.F. Section Bill of Materials	Pag. 66
5	VCO Component Layout	Pag. 69

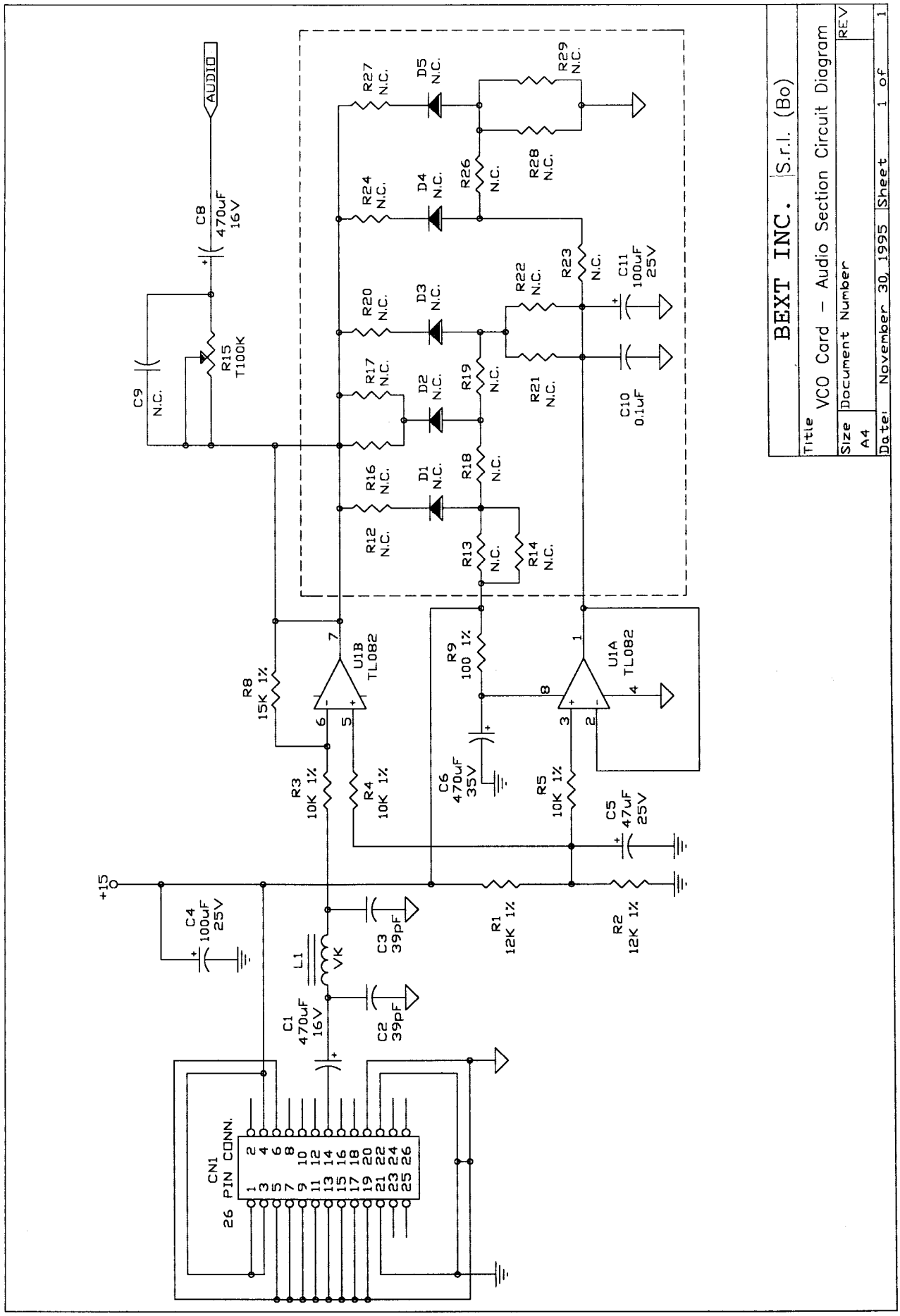
BEXT INC. S.r.l. (Bo)
Title VCO Card - Audio Section Circuit Diagram
Size A4
Document Number
REV
Date: November 30, 1995
Sheet 1 of 1
AUDIO
C8 470uF 16V
C9 N.C.
R15 T100K
R27 N.C.
D5 N.C.
R29 N.C.
R24 N.C.
D4 N.C.
R26 N.C.
R28 N.C.
R20 N.C.
D3 N.C.
R22 N.C.
R23 N.C.
C11 100uF 25V
R17 N.C.
D2 N.C.
R19 N.C.
R21 N.C.
C10 0.1uF
R16 N.C.
D1 N.C.
R18 N.C.
R12 N.C.
R13 N.C.
R14 N.C.
R8 15K 1%
U1B TL082
R9 100 1%
U1A TL082
R3 10K 1%
R4 10K 1%
C6 470uF 35V
R5 10K 1%
C5 47uF 25V
+15
C4 100uF 25V
C3 39pF
R1 12K 1%
R2 12K 1%
L1 VK
C1 470uF 16V
C2 39pF
CN1 26 PIN CONN.

VCO Card - A.F. Section Bill Of Materials Page 1

Item	Quantity	Reference	Part	Description	Part Order Code
1	1	R9	100 1%	RESISTOR 1/4W 1%	RSM1/4FH0100
2	3	R3,R4,R5	10K 1%	RESISTOR 1/4W 1%	RSM1/4FK0010
3	2	R1,R2	12K 1%	RESISTOR 1/4W 1%	RSM1/4FK0012
4	1	R8	15K 1%	RESISTOR 1/4W 1%	RSC1/4FK0015
5	1	R15	T100K	TRIMMER REG. VERT. 10mm	RVTD10VK0100
6	2	C2,C3	39pF	CERAMIC CAPACITOR NP0	CKM390BJ600C
7	1	C10	0.1µF	CERAMIC CAPACITOR	CKM104BK600P
8	1	C5	47µF	ELECTROLYTIC CAPACITOR	CEA476BM630
9	2	C4,C11	100µF	ELECTROLYTIC CAPACITOR	CEA107BM350
10	3	C1,C6,C8	470µF	ELECTROLYTIC CAPACITOR	CEA477BM350
11	1	L1	VK	RF CHOKE	IMPVK00A
12	1	CN1	26P CONN.	CONN. M 2*13 P 2.54	CNTMCSFC26P
13	1	U1	TL082	DOUBLE OP. AMP.	CILTL082
14	22	D1,D2,D3, D4,D5,C9, R12,R13, R14,R16, R17,R18, R19,R20, R21,R22, R23,R24, R26,R27, R28,R29	N.C.	NOT CONNECTED	

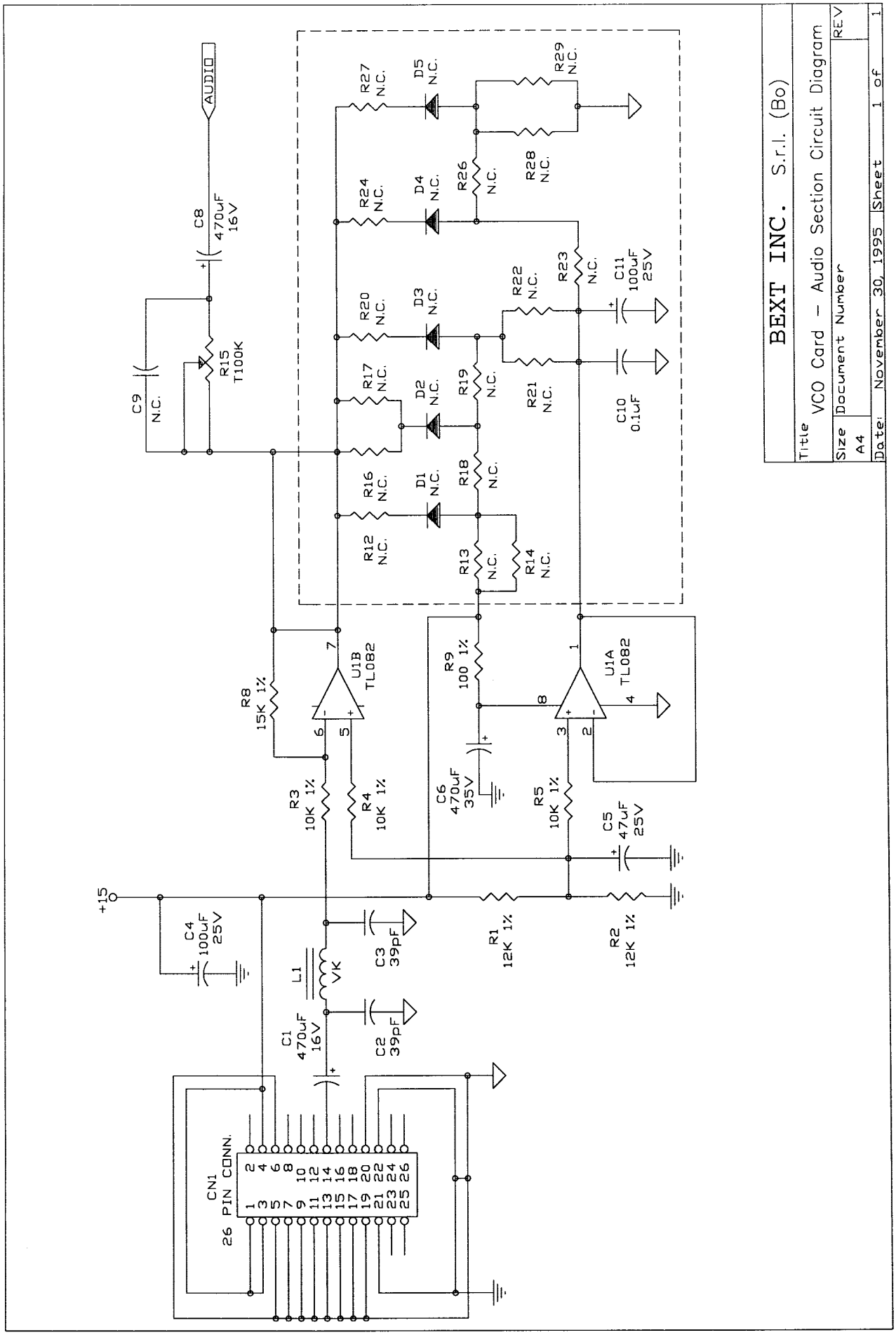
AUDIO
C8 470uF 16V
C9 N.C.
R15 T100K
R27 N.C.
D5 N.C.
R29 N.C.
R24 N.C.
D4 N.C.
R26 N.C.
R28 N.C.
R20 N.C.
D3 N.C.
R22 N.C.
R23 N.C.
C11 100uF 25V
R17 N.C.
D2 N.C.
R19 N.C.
R21 N.C.
C10 0.1uF
R16 N.C.
D1 N.C.
R18 N.C.
R12 N.C.
R13 N.C.
R14 N.C.
R8 15K 1%
U1B TL082
R9 100 1%
U1A TL082
R3 10K 1%
R4 10K 1%
C6 470uF 35V
R5 10K 1%
C5 47uF 25V
+15
C4 100uF 25V
C3 39pF
R1 12K 1%
R2 12K 1%
L1 VK
C1 470uF 16V
C2 39pF
CN1 26 PIN CONN.
BEXT INC. S.r.l. (Bo)
Title
VCO Card - Audio Section Circuit Diagram
REV
Size A4
Document Number
Date: November 30, 1995
Sheet 1 of 1

VCO Card - R.F. Section Bill Of Materials Page 1

Item	Quantity	Reference	Part	Description	Part Order Code
1	1	R60	0	0 OHM RESISTOR	R000
2	3	R56,R58,R64	5.6 1%	RESISTOR 1/4W 1%	RSM1/4FH05,6
3	4	R32,R38,5 R48,R6	10 1%	RESISTOR 1/4W 1%	RSM1/4FH0010
4	1	R39	22.1 1%	RESISTOR 1/4W 1%	RSM1/4FH22,1
5	2	R35,R59	47 1%	RESISTOR 1/4W 1%	RSM1/4FH0047
6	1	R34	56 1%	RESISTOR 1/4W 1%	RSM1/4FH0056
7	3	R33,R37,R40	100 1%	RESISTOR 1/4W 1%	RSM1/4FH0100
8	1	R73	120 1%	RESISTOR 1/4W 1%	RSM1/4FH0120
9	1	R63	210 1%	RESISTOR 1/4W 1%	RSM1/4FH0210
10	1	R43	220 1%	RESISTOR 1/4W 1%	RSM1/4FH0220
11	1	R62	270 1%	RESISTOR 1/4W 1%	RSM1/4FH0270
12	2	R44,R46	470 1%	RESISTOR 1/4W 1%	RSM1/4FH0470
13	2	R36,R49	680 1%	RESISTOR 1/4W 1%	RSM1/4FH0680
14	4	R50,R67, R68,R71	1K 1%	RESISTOR 1/4W 1%	RSM1/4FK0001
15	1	R61	1K5 1%	RESISTOR 1/4W 1%	RSC1/4FK01,5
16	1	R45	2K7 1%	RESISTOR 1/4W 1%	RSM1/4FK02,8
17	2	R42,R55	4K7 1%	RESISTOR 1/4W 1%	RSM1/4FK04,7
18	1	R57	5K6 1%	RESISTOR 1/4W 1%	RSM1/4FK05,6
19	1	R47	6K8 1%	RESISTOR 1/4W 1%	RSM1/4FK06,8
20	5	R41,R51, R66,R69,R72	10K 1%	RESISTOR 1/4W 1%	RSM1/4FK0010
21	2	R31,R54	22K 1%	RESISTOR 1/4W 1%	RSM1/4FK0022
22	1	R53	47K 1%	RESISTOR 1/4W 1%	RSM1/4FK0047
23	1	R52	1M 1%	RESISTOR 1/4W 1%	RSM1/4FM0001
24	1	C16	2p2	CERAMIC CAPACITOR NP0	CKM2,2BJ600C
25	1	C35	22pF	CERAMIC CAPACITOR NP0	CKM220BJ600C
26	1	C32	33pF	CERAMIC CAPACITOR NP0	CKM330BJ600C

PLL Card Bill Of Materials Page 2

Item	Quantity	Reference	Part	Description	Part Order Code
28	2	RR1,RR2	RR2K2	RESISTOR NETWORK	RRR1/4JK02,2
29	1	C36	2p2	CERAMIC CAPACITOR NPO	CKM2,2BJ600C
30	1	C38	220pF	CERAMIC CAPACITOR NPO	CKM221BK600C
31	1	C35	330pF	CERAMIC CAPACITOR	CKM331BK600P
32	1	C6	560pF	CERAMIC CAPACITOR	CKM561BK600P
33	1	C34	1n5P	POLIESTER CAPACITOR	CPE152BK101
34	3	C37,C40,C41	4n7	CERAMIC CAPACITOR	CKM472BK600P
35	3	C3,C9,C11	47nF	CERAMIC CAPACITOR	CKM473BK600P
36	8	C21,C26, C27,C28,C29, C31,C33,C42	0.1µF	CERAMIC CAPACITOR	CKM104BK600P
37	1	C19	0.1µFT	TANTALIUM CAPACITOR	CET104AM350
38	1	C13	2.2µFT	TANTALIUM CAPACITOR	CET225AM350
39	13	C7,C8,C10, C12,C14,C15, C16,C22,C24, C25,C30,C32, C43	10µF	ELECTROLYTIC CAPACITOR	CEA106AM350
40	1	C18	22µF	ELECTROLYTIC CAPACITOR	CEA226BM350
41	1	C17	22µFT	TANTALIUM CAPACITOR	CET226AM350
42	1	C23	47µF	ELECTROLYTIC CAPACITOR	CEA476BM630
43	1	C20	100µF	ELECTROLYTIC CAPACITOR	CEA107BM350
44	1	L4	2µ2	RF CHOKE	IMP02U2A
45	1	L1	220µH	RF CHOKE	IMP220UA
46	2	L2,L3	VK	RF CHOKE	IMPVK00A
47	1	J7	2 PIN STRIP	STRIP M P 2.54 2 PIN	CNTSTRIPMCS
48	1	JP1	4 PIN STRIP	STRIP M P 2.54 4 PIN	CNTSTRIPMCS
49	1	J1	2 PIN JUMP	MINIJUMPER P 2.54	MINIJUMPER
50	1	CN1	DB25 M F	CONN. M 25 FILT. MURATA	
51	2	J2,J5	SMB	CONN. SMB CRIMP. RG188	CNTSMBFCVD
52	2	D2,D3	1N4148	SILICON DIODE	DIS1N4148
53	1	U6	7805	POS. STABILIZER 1A	CIL7805P

VCO Card - R.F. Section Bill Of Materials Page 3

Item	Quantity	Reference	Part	Description	Part Order Code
53	1	Q4	J310	FET TRANSISTOR	TRNJ310
54	7	JP1,C13, C27,R30, C51,C53,R70	N.C.	NOT CONNECTED	
55	2	C34,C36	100pF	CERAMIC CAPACITOR NP0	CKM101BJ600C
56	1	C12	220pF	CERAMIC CAPACITOR NP0	CKM221BK600C

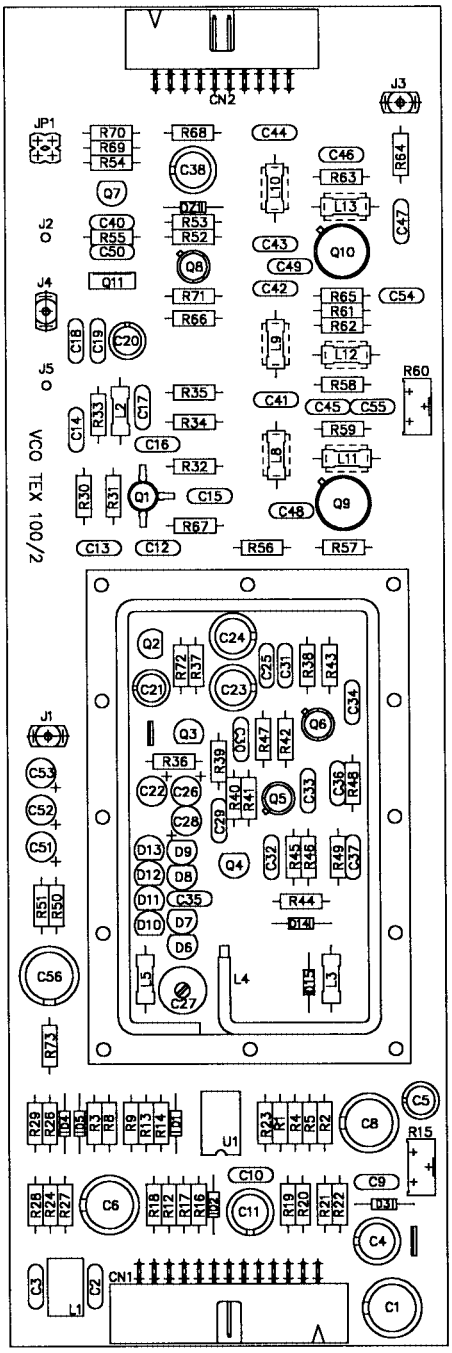

BEXT INC.®	DENOMINAZIONE VCO Card Component Layout / Piano di Montaggio		
	DISPOSITIVO		
SEMILAVORATO	DISEGNATO D'Alessio D. II	DISEGNO	
MATERIALE	SCALA		
TRATTAMENTO		TAVOLA n 1 di 1	

PLL CARD

1	Circuit Diagram	Pag. 71
2	Bill of Materials	Pag. 72
3	Coponent Layout	Pag. 77

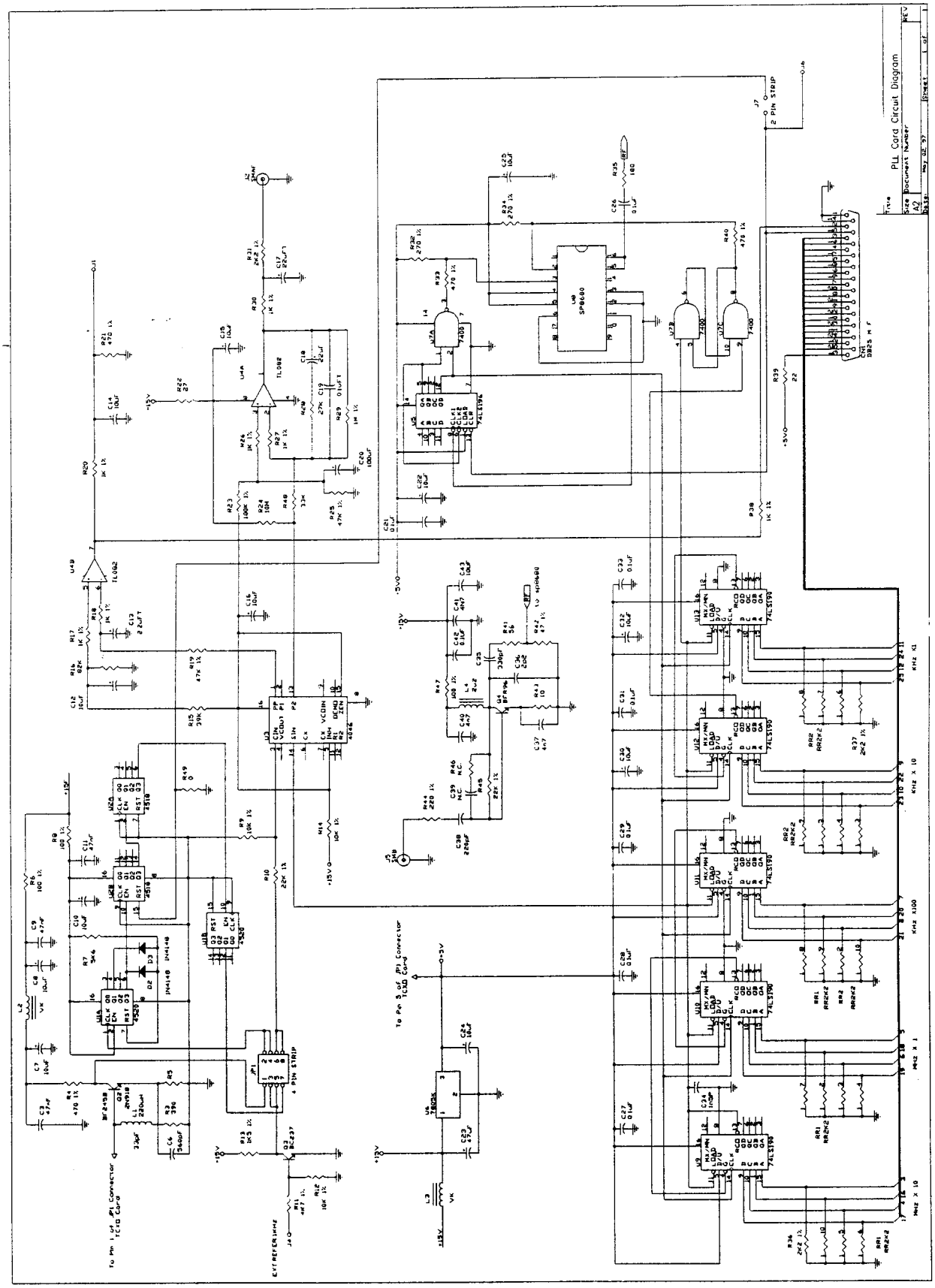
PLL Card Circuit Diagram

PLL Card Bill Of Materials Page 1

Item	Quantity	Reference	Part	Description	Part Order Code
1	1	R49	0	0 OHM RESISTOR	R000
2	1	R43	10 1%	RESISTOR 1/4W 1%	RSM1/4FH0010
3	1	R39	22 1%	RESISTOR 1/4W 1%	RSM1/4FH0022
4	1	R22	27 1%	RESISTOR 1/4W 1%	RSM1/4FH0027
5	1	R42	47 1%	RESISTOR 1/4W 1%	RSM1/4FH0047
6	1	R41	56 1%	RESISTOR 1/4W 1%	RSM1/4FH0056
7	4	R5,R6,R8, R47	100 1%	RESISTOR 1/4W 1%	RSM1/4FH0100
8	1	R35	180	RESISTOR 1/4W 5%	RSC1/4JH0180
9	1	R44	220 1%	RESISTOR 1/4W 1%	RSM1/4FH0220
10	2	R32,R34	270 1%	RESISTOR 1/4W 1%	RSM1/4FH0270
11	1	R3	390 1%	RESISTOR 1/4W 1%	RSM1/4FH0390
12	4	R4,R21,R33, R40	470 1%	RESISTOR 1/4W 1%	RSM1/4FH0470
13	7	R17,R18, R20,R26,R27, R30,R38	1K 1%	RESISTOR 1/4W 1%	RSM1/4FK0001
14	3	R13,R36,R37	1K5 1%	RESISTOR 1/4W 1%	RSC1/4FK01,5
15	1	R31	2K2 1%	RESISTOR 1/4W 1%	RSC1/4FK02,2
16	1	R11	4K7 1%	RESISTOR 1/4W 1%	RSM1/4FK04,7
17	1	R7	5K6 1%	RESISTOR 1/4W 1%	RSM1/4FK05,6
18	3	R9,R12,R14	10K 1%	RESISTOR 1/4W 1%	RSM1/4FK0010
19	2	R10,R45	22K 1%	RESISTOR 1/4W 1%	RSM1/4FK0022
20	1	R28	27K 1%	RESISTOR 1/4W 1%	RSM1/4FK0027
21	1	R48	33K 1%	RESISTOR 1/4W 1%	RSM1/4FK0033
22	1	R15	39K 1%	RESISTOR 1/4W 1%	RSM1/4FK0039
23	2	R19,R25	47K 1%	RESISTOR 1/4W 1%	RSM1/4FK0047
24	1	R16	82K 1%	RESISTOR 1/4W 1%	RSM1/4FK0082
25	1	R23	100K 1%	RESISTOR 1/4W 1%	RSM1/4FH0100

PLL Card Bill Of Materials Page 2

Item	Quantity	Reference	Part	Description	Part Order Code
26	1	R29	1M 1%	RESISTOR 1/4W 1%	RSM1/4FM0001
27	1	R24	10M 1%	RESISTOR 1/4W 1%	RSM1/4FM0010

PLL Card Bill Of Materials Page 3

Item	Quantity	Reference	Part	Description	Part Order Code
28	2	RR1,RR2	RR2K2	RESISTOR NETWORK	RRR1/4JK02,2
29	1	C36	2p2	CERAMIC CAPACITOR NP0	CKM2,2BJ600C
30	1	C38	220pF	CERAMIC CAPACITOR NP0	CKM221BK600C
31	1	C35	330pF	CERAMIC CAPACITOR	CKM331BK600P
32	1	C6	560pF	CERAMIC CAPACITOR	CKM561BK600P
33	1	C34	1n5P	POLIESTER CAPACITOR	CPE152BK101
34	3	C37,C40,C41	4n7	CERAMIC CAPACITOR	CKM472BK600P
35	3	C3,C9,C11	47nF	CERAMIC CAPACITOR	CKM473BK600P
36	8	C21,C26, C27,C28,C29, C31,C33,C42	0.1µF	CERAMIC CAPACITOR	CKM104BK600P
37	1	C19	0.1µFT	TANTALIUM CAPACITOR	CET104AM350
38	1	C13	2.2µFT	TANTALIUM CAPACITOR	CET225AM350
39	13	C7,C8,C10, C12,C14,C15, C16,C22,C24, C25,C30,C32, C43	10µF	ELECTROLYTIC CAPACITOR	CEA106AM350
40	1	C18	22µF	ELECTROLYTIC CAPACITOR	CEA226BM350
41	1	C17	22µFT	TANTALIUM CAPACITOR	CET226AM350
42	1	C23	47µF	ELECTROLYTIC CAPACITOR	CEA476BM630
43	1	C20	100µF	ELECTROLYTIC CAPACITOR	CEA107BM350
44	1	L4	2µ2	RF CHOKE	IMP02U2A
45	1	L1	220µH	RF CHOKE	IMP220UA
46	2	L2,L3	VK	RF CHOKE	IMPVK00A
47	1	J7	2 PIN STRIP	STRIP M P 2.54 2 PIN	CNTSTRIPMCS
48	1	JP1	4 PIN STRIP	STRIP M P 2.54 4 PIN	CNTSTRIPMCS
49	1	J1	2 PIN JUMP	MINIJUMPER P 2.54	MINIJUMPER
50	1	CN1	DB25 M F	CONN. M 25 FILT. MURATA	
51	2	J2,J5	SMB	CONN. SMB CRIMP. RG188	CNTSMBFCVD

PLL Card Bill Of Materials Page 4

Item	Quantity	Reference	Part	Description	Part Order Code
52	2	D2,D3	1N4148	SILICON DIODE	DIS1N4148
53	1	U6	7805	POS. STABILIZER 1A	CIL7805P

PLL Card Bill Of Materials Page 5

Item	Quantity	Reference	Part	Description	Part Order Code
54	1	Q3	BC547	NPN TRANSISTOR	TRNBC547
55	1	Q2	2N918	NPN RF TRANSISTOR	TRN2N918
56	1	Q4	BFR96	NPN RF TRANSISTOR	TRNBFR96
57	1	U4	TL082	DOUBLE OP. AMP.	CILTL082
58	1	U8	SP8680	ECL DIVIDER	CIDSP8680B
59	1	U3	4046	CMOS PHASE COMPARATOR	CID4046
60	1	U2	4518	CMOS BCD DIVIDER	CID4518
61	1	U1	4520	CMOS BIN DIVIDER	CID4520
62	1	U7	7400	TTL QUAD NAND	CID7400
63	5	U9,U10,U11, U12,U13	74LS190	TTL BCD DIVIDER	CID74LS190
64	1	U5	74LS196	TTL LS DIVIDER	CID74LS196
65	2	C39,R46	N.C.	NOT CONNECTED	

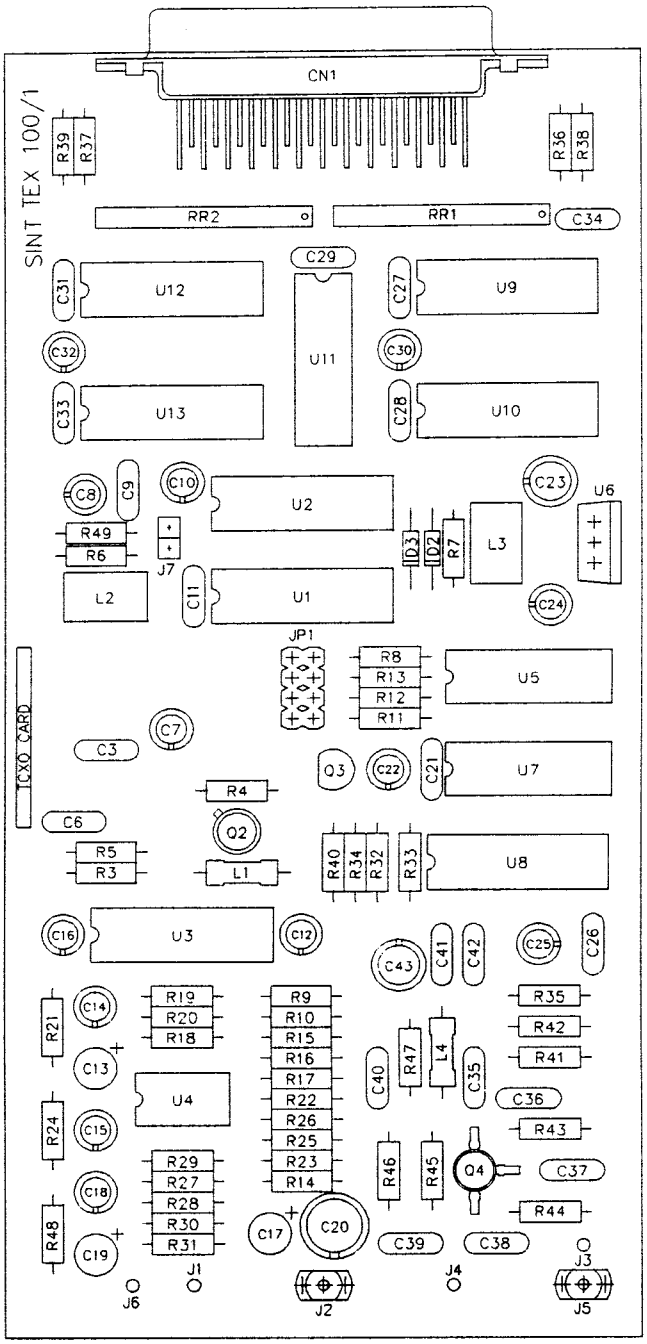
SINT TEX 100/1
CN1
R39
R37
R36
R38
RR2
RR1
C34
C29
C31
U12
C27
U9
C32
U11
C30
C33
U13
C28
U10
C8
C9
C10
U2
C23
U6
R49
R6
J7
ID3
ID2
R7
L3
L2
C11
U1
C24
JP1
R8
R13
R12
R11
U5
TCXO CARD
C7
C3
Q3
C22
C21
U7
R4
C6
Q2
R5
R3
L1
R40
R34
R32
R33
U8
C16
U3
C12
C43
C41
C42
C25
C26
R21
C14
R19
R20
R18
R9
R10
R15
R16
R17
R22
R26
R25
R23
R14
R35
R42
R41
C13
U4
C40
R47
L4
C35
C36
R24
C15
R43
R29
R27
R28
R30
R31
R46
R45
Q4
C37
C18
R44
R48
C19
C17
C20
C39
C38
J1
J6
J2
J4
J3
J5
DENOMINAZIONE
PLL Card Component Layout / Piano di Montaggio
DISPOSITIVO
TEX100 (F.M. Exciter)
SEMILAVORATO
MATERIALE
TRATTAMENTO
DISEGNATO
D'Alessio D. li
SCALA
DISEGNO
TAVOLA n 1 di 1

ALARMS CARD

1	Circuit Diagram	Pag. 79
2	Bill of Materials	Pag. 80
3	Coponent Layout	Pag. 82

TEX150 and TEX150/S Technical and Maintenance Manual

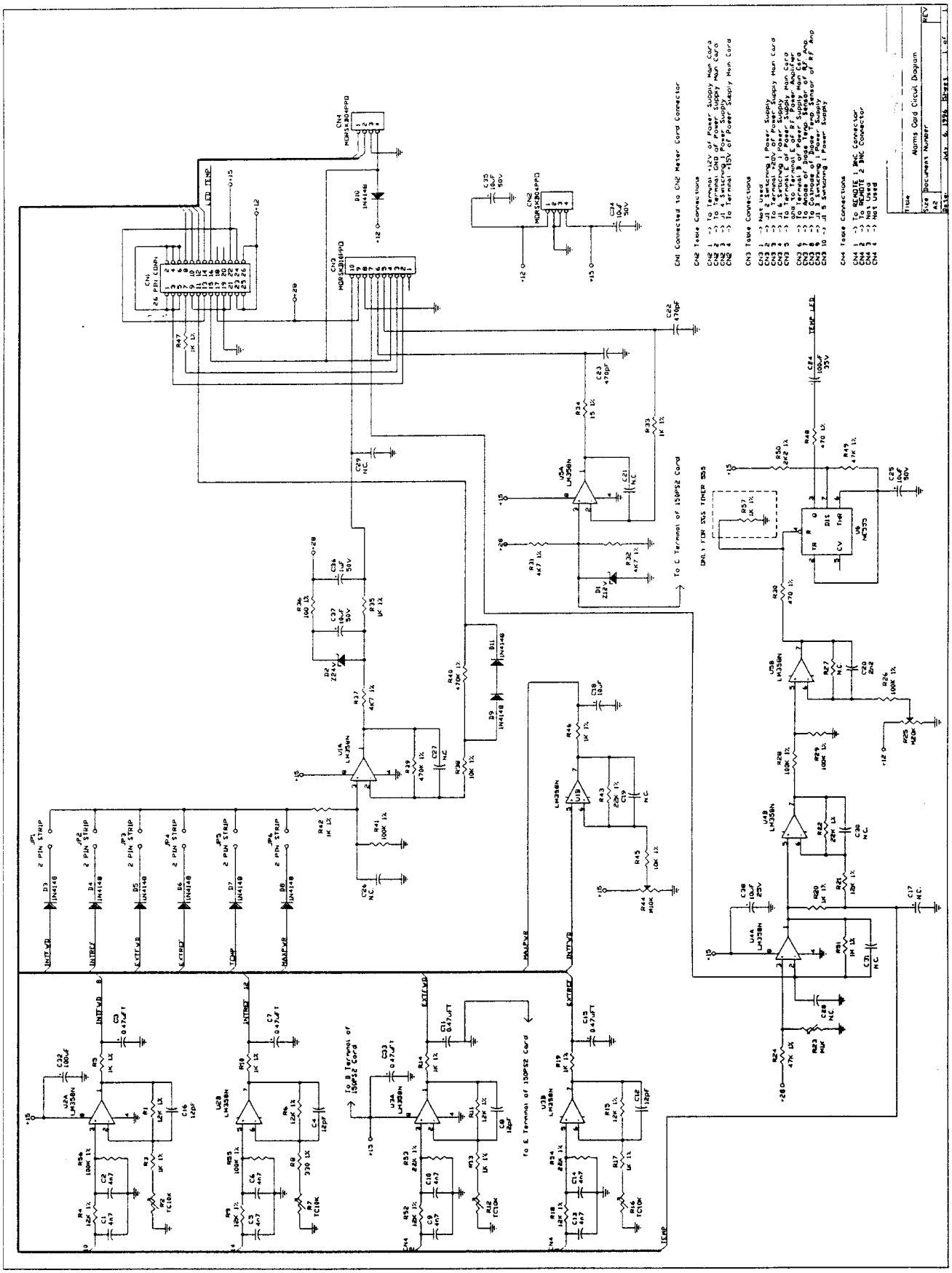

Alarms Card Bill Of Materials Page 1

Item	Quantity	Reference	Part	Description	Part Order Code
1	1	R34	15 1%	RESISTOR 1/4W 1%	RSM1/4JH0015
2	1	R36	100 1%	RESISTOR 1/4W 1%	RSM1/4FH0100
3	1	R8	330 1%	RESISTOR 1/4W 5%	RSM1/4FH0330
4	2	R30,R48	470 1%	RESISTOR 1/4W 1%	RSM1/4FH0470
5	14	R3,R5,R10, R13,R14, R17,R19, R20,R33, R35,R42, R46,R47,R57	1K 1%	RESISTOR 1/4W 1%	RSM1/4FK0001
6	1	R50	2K2 1%	RESISTOR 1/4W 1%	RSC1/4FK02,2
7	3	R31,R32,R37	4K7 1%	RESISTOR 1/4W 1%	RSM1/4FK04,7
8	2	R38,R45	10K 1%	RESISTOR 1/4W 1%	RSM1/4FK0010
9	9	R1,R4,R6, R9,R11,R15, R18,R21,R52	12K 1%	RESISTOR 1/4W 1%	RSM1/4FK0012
10	4	R22,R43, R53,R54	22K 1%	RESISTOR 1/4W 1%	RSM1/4FK0022
11	2	R24,R49	47K 1%	RESISTOR 1/4W 1%	RSM1/4FK0047
12	6	R26,R28, R29,R41, R55,R56	100K 1%	RESISTOR 1/4W 1%	RSM1/4FH0100
13	2	R39,R40	470K 1%	RESISTOR 1/4W 1%	RSC1/4FK0470
14	1	R51	1M 1%	RESISTOR 1/4W 1%	RSM1/4FM0001
15	4	R2,R7,R12, R16	TC10K	TRIM. REG. VERT. CERMET	RVTCERVK0010
16	1	R23	M1K	TRIMMER MULTIGIRI	RVTMULAK0001
17	1	R44	M10K	TRIMMER MULTIGIRI	RVTMULAK0010
18	1	R25	M20K	TRIMMER MULTIGIRI	RVTMULAK0020
19	4	C4,C8,C12, C16	12pF	CERAMIC CAPACITOR NP0	CKM120BJ600C
20	2	C22,C23	470pF	CERAMIC CAPACITOR	CKM471BK600P
21	1	C20	2n2	CERAMIC CAPACITOR	CKM222BK600P

Alarms Card Bill Of Materials Page 2

Item	Quantity	Reference	Part	Description	Part Order Code
22	8	C1,C2,C5, C6,C9,C10, C13,C14	4n7	CERAMIC CAPACITOR	CKM472BK600P
23	5	C3,C7,C11, C15,C33	0.47µFT	TANTALIUM CAPACITOR	CET474AM350
24	1	C36	1µF	ELECTROLYTIC CAPACITOR	CEA105AM630
25	6	C18,C25, C34,C35, C37,C38	10µF	ELECTROLYTIC CAPACITOR	CEA106AM350
26	2	C24,C32	100µF	ELECTROLYTIC CAPACITOR	CEA107BM350
27	6	JP1,JP2, JP3,JP4, JP5,JP6	2 PIN STRIP	STRIP M P 2.54 2 PIN	CNTSTRIPMCS
28	1	CN3	MORSKB10PPO	MORS. LUMBERG F. CS 10P	MORSKB10PPO
29	2	CN2,CN4	MORSKB04PPO	MORS. LUMBERG F. CS 04P	MORSKB04PPO
30	1	CN1	26P CONN.	CONN. M 2*13 P 2.54	CNTMCSFC26P
31	9	D3,D4,D5, D6,D7,D8, D9,D10,D11	1N4148	SILICON DIODE	DIS1N4148
32	1	D1	Z12V	ZENER DIODE 12V 0.4W	DIZ12V0W4
33	1	D2	Z24V	ZENER DIODE 24V 0.4W	DIZ24V0W4
34	5	U1,U2,U3, U4,U5	LM358N	DOUBLE OP. AMP.	CILLM358N
35	1	U6	NE555	TIMER	CIL555
36	10	C17,C19, C21,C26, R27,C27, C28,C29, C30,C31	N.C.	NOT CONNECTED	

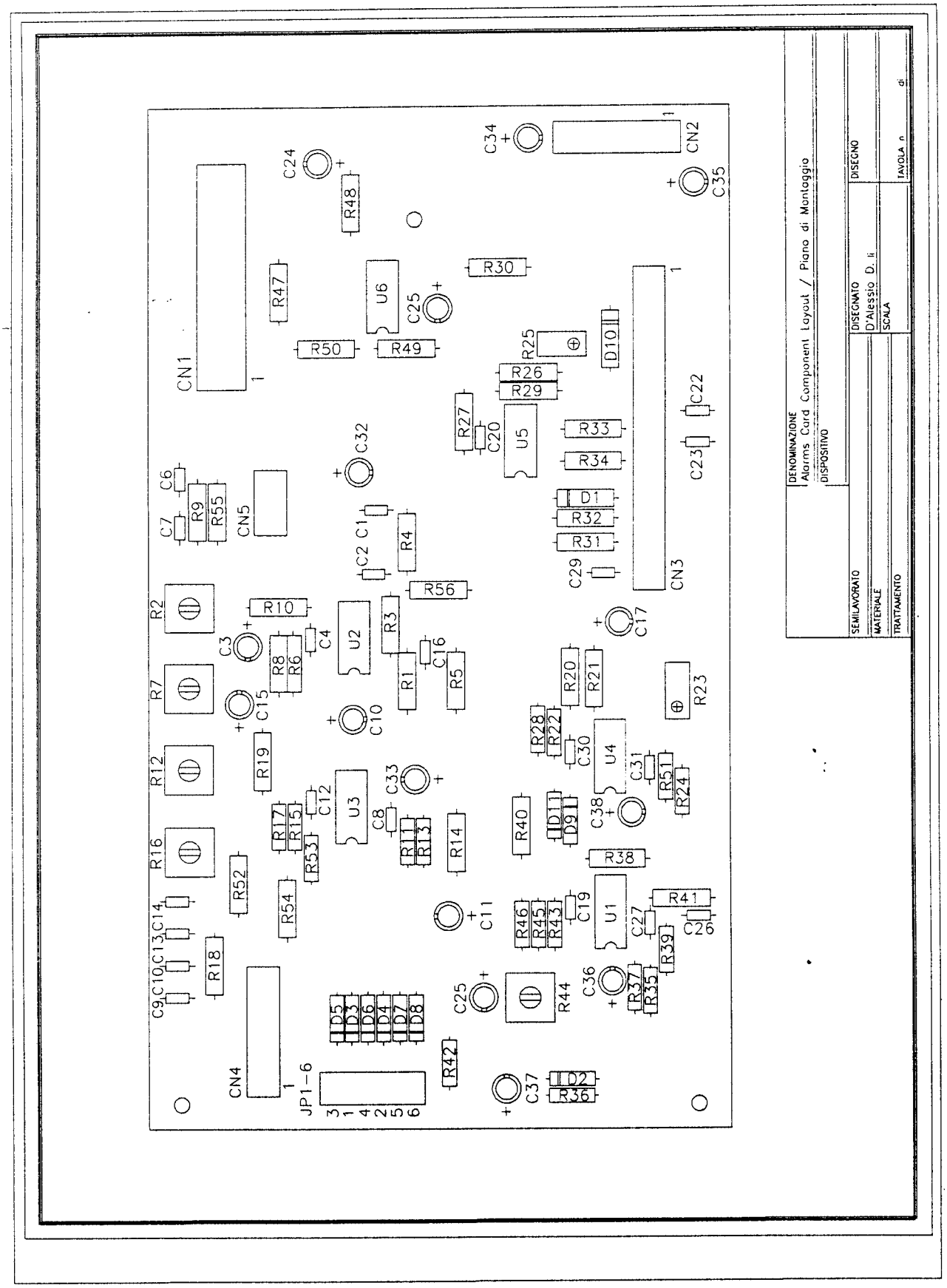
DENOMINAZIONE
Alarms Card Component Layout / Piano di Montaggio
DISPOSITIVO
SEMILAVORATO
MATERIALE
TRATTAMENTO
DISEGNATO
D'Alessio D. li
SCALA
DISEGNO
TAVOLA n
di
CN1
CN2
CN3
CN4
CN5
JP1-6
U1
U2
U3
U4
U5
U6

METER CARD

1	Circuit Diagram	Pag. 84
2	Bill of Materials	Pag. 85
3	Coponent Layout	Pag. 87

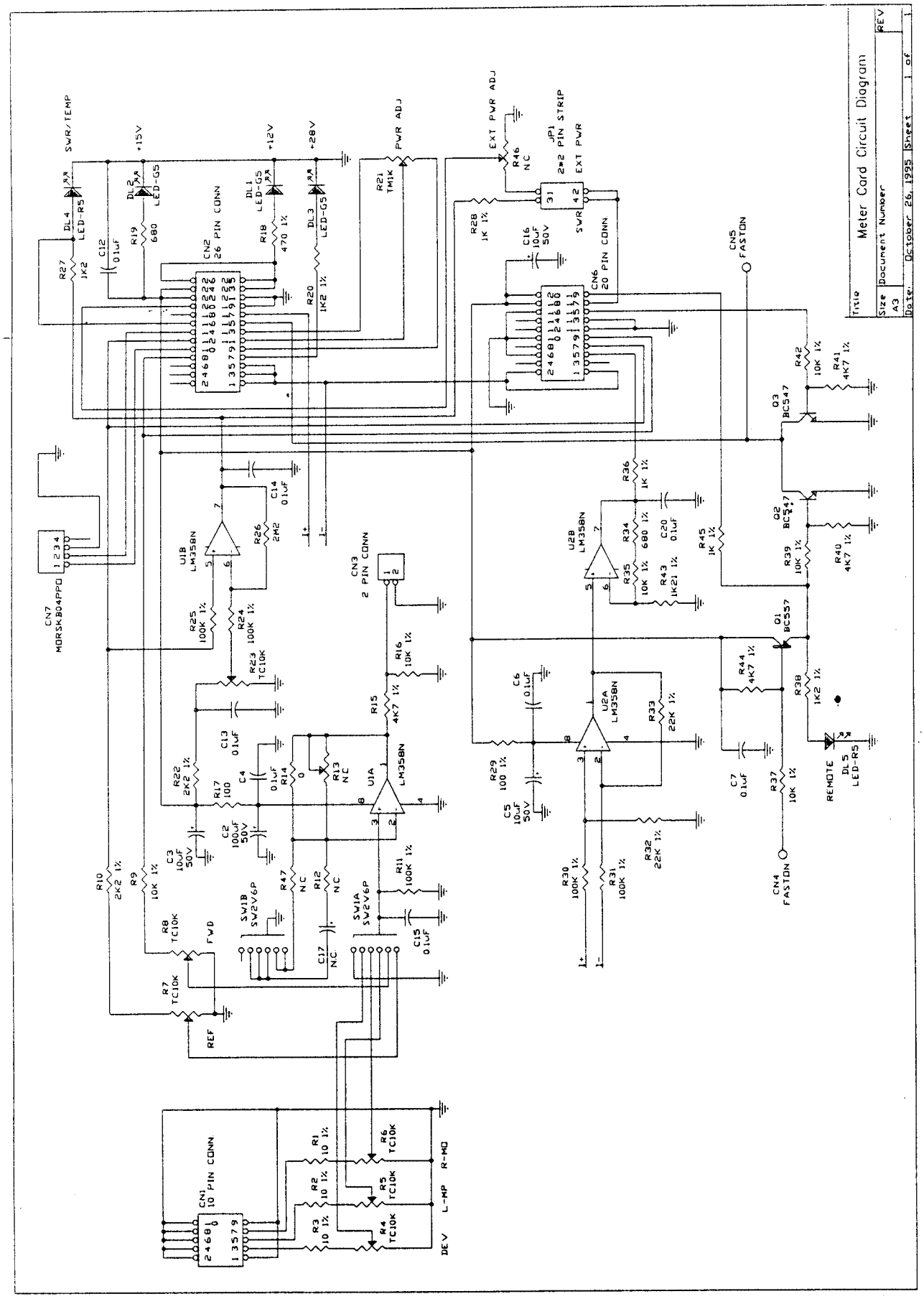
Meter Card Circuit Diagram
Title
Size
A3
Document Number
REV
Date: October 26, 1995
Sheet 1 of 1
SWR/TEMP
+15V
+12V
+28V
PWR ADJ
EXT PWR ADJ
JP1
2*2 PIN STRIP
EXT PWR
CN2
26 PIN CONN
CN6
20 PIN CONN
CN5
FASTON
CN4
FASTON
CN7
MORSKB04PPD
CN3
2 PIN CONN
CN1
10 PIN CONN
U1B
LM358N
U1A
LM358N
U2A
LM358N
U2B
LM358N
SW1B
SW2V6P
SW1A
SW2V6P
FWD
REF
REMOTE
R-MD
L-MP
DEV

Meter Card Bill Of Materials Page 1

Item	Quantity	Reference	Part	Description	Part Order Code
1	1	R14	0	0 OHM RESISTOR	R000
2	3	R1,R2,R3	10 1%	RESISTOR 1/4W 1%	RSM1/4FH0010
3	1	R29	100 1%	RESISTOR 1/4W 1%	RSM1/4FH0100
4	1	R17	100	RESISTOR 1/4W 5%	RSC1/4JH0100
5	1	R18	470 1%	RESISTOR 1/4W 1%	RSM1/4FH0470
6	1	R34	680 1%	RESISTOR 1/4W 1%	RSM1/4FH0680
7	1	R19	680	RESISTOR 1/4W 5%	RSC1/4JH0680
8	3	R28,R36,R45	1K 1%	RESISTOR 1/4W 1%	RSM1/4FK0001
9	2	R20,R38	1K2 1%	RESISTOR 1/4W 1%	RSM1/4FK01,2
10	1	R27	1K2	RESISTOR 1/4W 5%	RSC1/4JK01,2
11	1	R43	1K21 1%	RESISTOR 1/4W 1%	RSC1/4FK1,21
12	2	R10,R22	2K2 1%	RESISTOR 1/4W 1%	RSC1/4FK02,2
13	4	R15,R40, R41,R44	4K7 1%	RESISTOR 1/4W 1%	RSM1/4FK04,7
14	6	R9,R16, R35,R37, R39,R42	10K 1%	RESISTOR 1/4W 1%	RSM1/4FK0010
15	2	R32,R33	22K 1%	RESISTOR 1/4W 1%	RSM1/4FK0022
16	5	R11,R24, R25,R30,R31	100K 1%	RESISTOR 1/4W 1%	RSM1/4FH0100
17	1	R26	2M2	RESISTOR 1/4W 5%	RSC1/4JM02,2
18	6	R4,R5,R6, R7,R8,R23	TC10K	TRIM. REG. VERT. CERMET	RVTCERVK0010
19	1	R21	TM1K	TRIMM. MULT. REG. VERT.	RVTMULVK0001
20	8	C4,C6,C7, C12,C13, C14,C15,C20	0.1µF	CERAMIC CAPACITOR	CKM104BK600P
21	3	C3,C5,C16	10µF	ELECTROLYTIC CAPACITOR	CEA106AM350
22	1	C2	100µF	ELECTROLYTIC CAPACITOR	CEA107BM350
23	1	JP1	2*2P STRIP	STRIP M P 2.54 2*2 PIN	CNTSTRIPMCS
24	2	CN4,CN5	FASTON	CONN. FASTON M C.S.	CNTFSTMCSGR

Meter Card Bill Of Materials Page 2

Item	Quantity	Reference	Part	Description	Part Order Code
25	1	CN7	MORSKB04PPO	MORS. LUMB, FEMM. CS 4P	MORSKB04PPO
26	1	CN3	2 PIN CONN.	CONN. M 2*1 P 2.54	CNTM2PCS
27	1	CN1	10P CONN.	CONN. M 2*5 P 2.54	CNTMCSFC10P
28	1	CN6	20P CONN.	CONN. M 2*10 P 2.54	CNTMCSFC20P
29	1	CN2	26P CONN.	CONN. M 2*13 P 2.54	CNTMCSFC26P
30	1	SW1	SW2V6P	COMM.. 2 VIE 6 POS FEME	COMR2V6PCS
31	2	DL4,DL5	LED-R5	RED LED DIODE	LEDRO05
32	3	DL1,DL2,DL3	LED-G5	GREEN LED DIODE	LEDVE05
33	2	Q2,Q3	BC547	NPN TRANSISTOR	TRNBC547
34	1	Q1	BC557	PNP TRANSISTOR	TRNBC557
35	2	U1,U2	LM358N	DOUBLE OP. AMP.	CILLM358N
36	5	R12,R13, C17,R46,R47	N.C.	NOT CONNECTED	

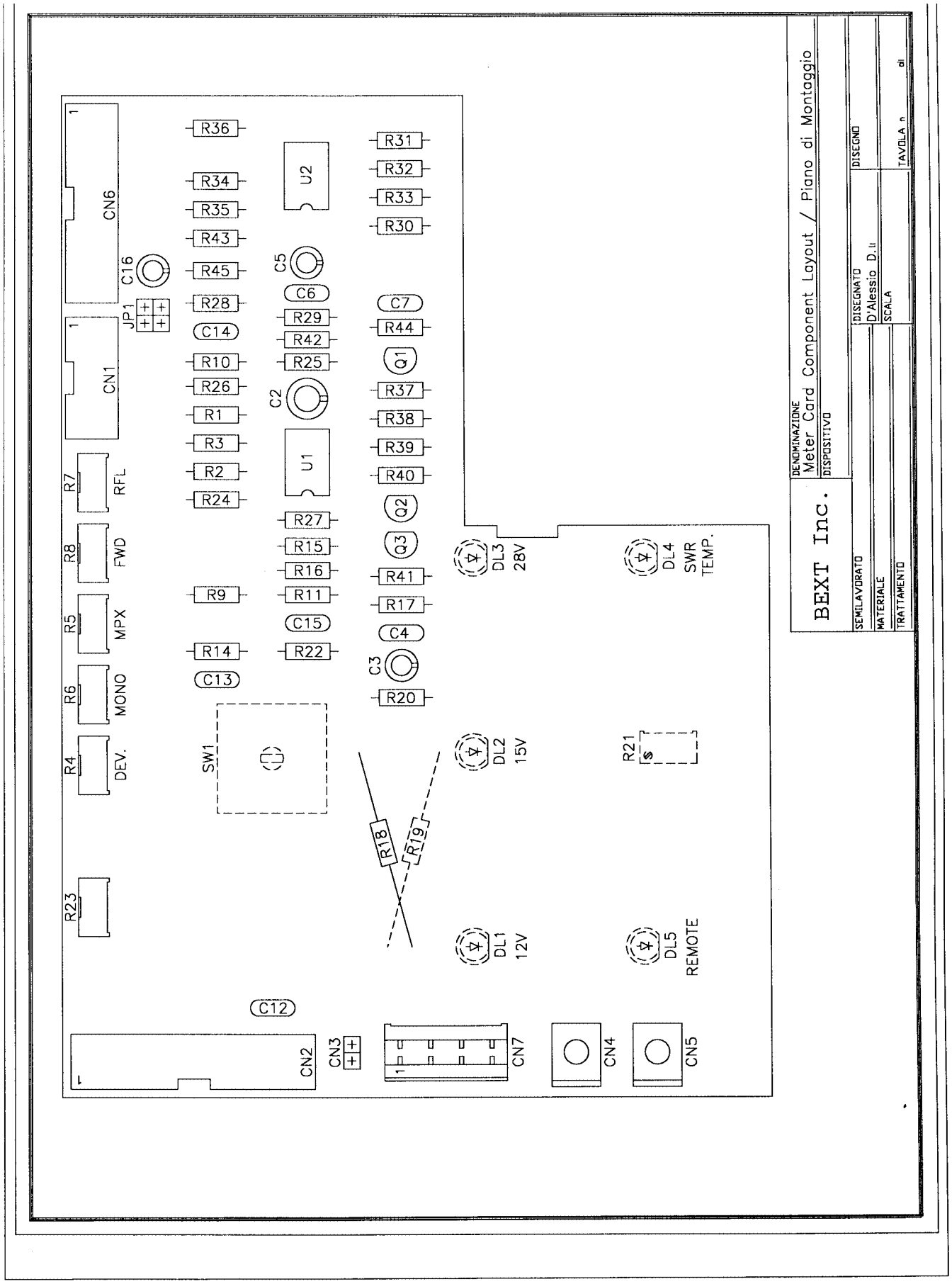
CN6
CN1
C16
JP1
R36
R34
R35
R43
R45
R28
C14
R10
R26
R1
R3
R2
R24
R9
R14
C13
U2
U1
C5
C6
C2
R29
R42
R25
R27
R15
R16
R11
C15
R22
R31
R32
R33
R30
C7
R44
Q1
R37
R38
R39
R40
Q2
Q3
R41
R17
C4
C3
R20
R7
RFL
R8
FWD
R5
MPX
R6
MONO
R4
DEV.
R23
SW1
R18
R19
DL3
28V
DL4
SWR
TEMP.
DL2
15V
R21
DL1
12V
DL5
REMOTE
C12
CN2
CN3
CN7
CN4
CN5
DENOMINAZIONE
Meter Card Component Layout / Piano di Montaggio
DISPOSITIVO
BEXT Inc.
SEMILAVORATO
MATERIALE
TRATTAMENTO
DISEGNATO
D'Alessio D.ii
SCALA
DISEGNO
TAVOLA n
di

TRANSFORMER SUPPLY SECTION

1 Circuit Diagram Pag. 89

2 Bill of Materials Pag. 90

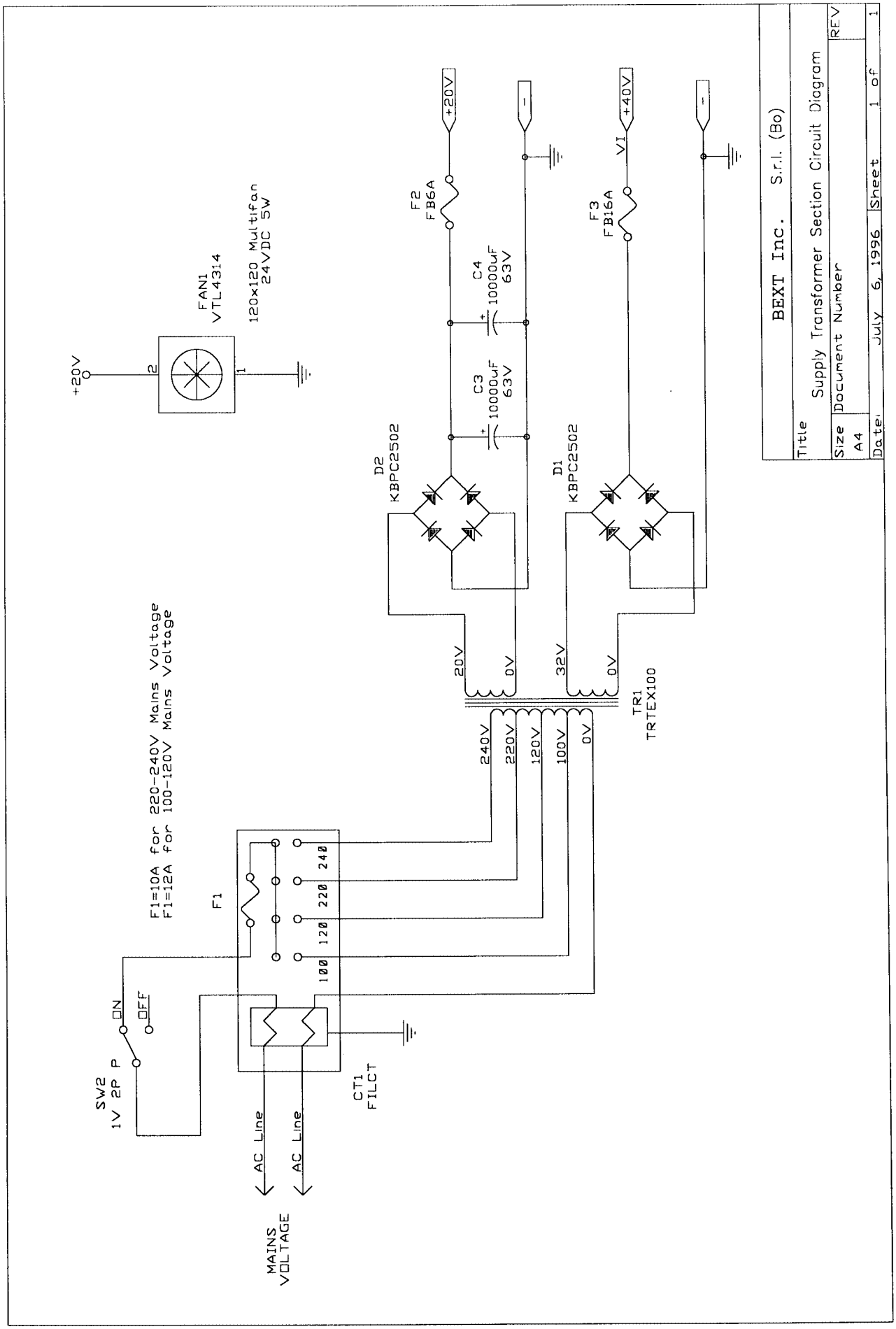
BEXT Inc. S.r.l. (Bo)
Title
Supply Transformer Section Circuit Diagram
Size
A4
Document Number
REV
Date:
July 6, 1996
Sheet
1 of
1
+20V
FAN1
VTL4314
120x120 Multifan
24VDC 5W
F2
FB6A
C4
10000uF
63V
C3
10000uF
63V
D2
KBPC2502
+40V
VI
F3
FB16A
D1
KBPC2502
20V
0V
32V
0V
TR1
TRTEX100
240V
220V
120V
100V
0V
F1=10A for 220-240V Mains Voltage
F1=12A for 100-120V Mains Voltage
F1
240
220
120
100
ON
OFF
SW2
1V 2P P
CT1
FILCT
AC Line
AC Line
MAINS
VOLTAGE

Transformer Supply Section Bill Of Materials Page 1

Item	Quantity	Reference	Part	Description	Part Order Code
1	2	C3,C4	10000µF	ELECTROLYTIC CAPACITOR	CEA109PM630
2	1	F1	F10A	FAST FUSIBILE	FUS5X20RP10
3	1	F2	FB6A	FAST FUSIBLE	FUS6X30RP6
4	1	F3	FB16A	FAST FUSIBILE	FUS6X30RP16
5	1	CT1	FILCT	FILTRO VDE CON C. TENS.	CNTVDEMPCT
6	1	SW2	1V 2P P	DEV. 1 VIA 2 POS PANN.	DEV1V1103
7	2	D1,D2	KBPC2502	DIODE BRIDGE 25A	PNRKBPC2502
8	1	TR1	TRTEX100	TRASFORMATORE TEX 100	TRFTEX100
9	1	FAN1	VTL4314	VENT. 120x120 24VDC 5W	VTL4314

MAIN POWER SUPPLY

1	Circuit Diagram	Pag. 92
2	Bill of Materials	Pag. 93
3	Coponent Layout	Pag. 94

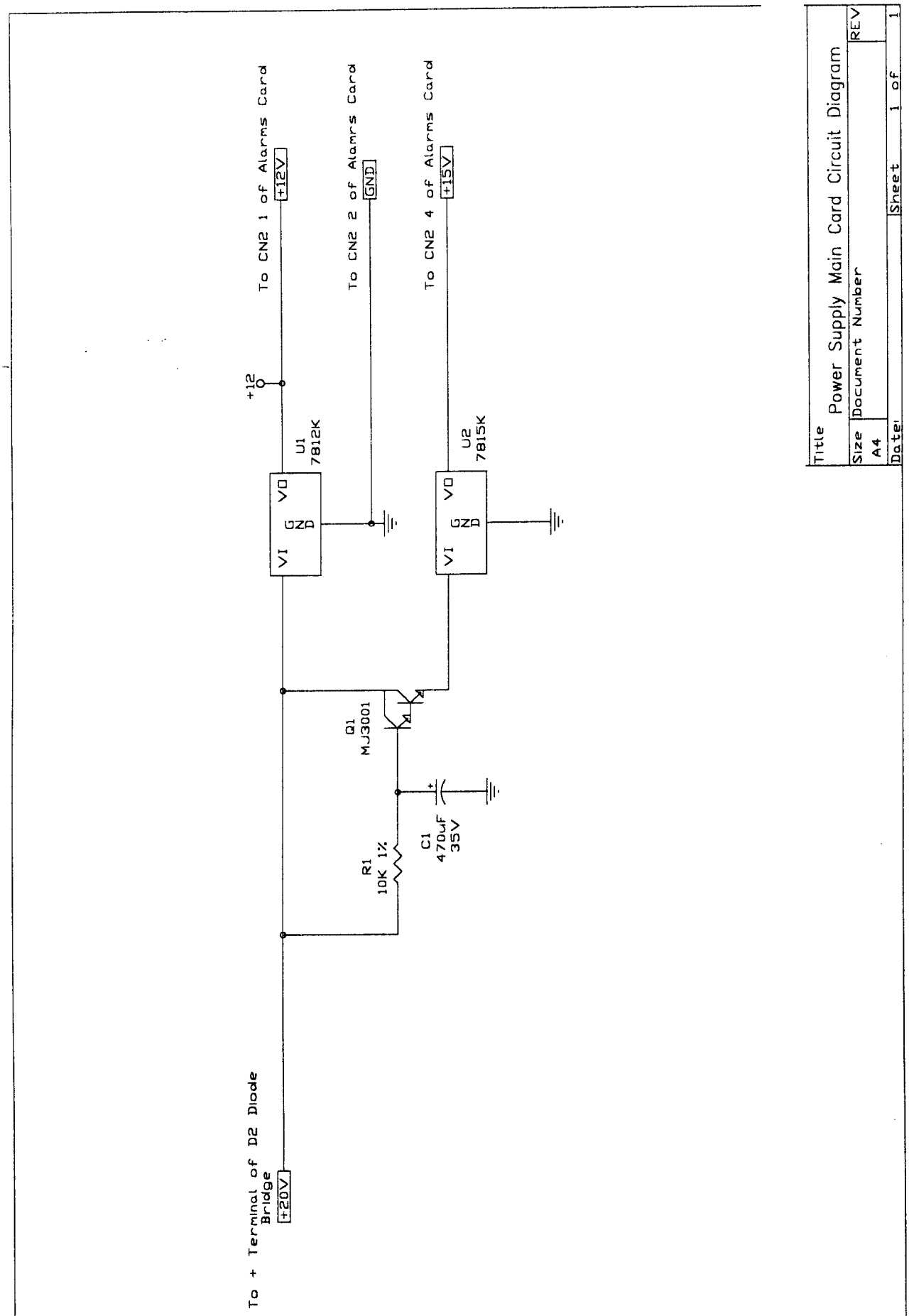
To CN2 1 of Alarms Card
+12V
To CN2 2 of Alarms Card
GND
To CN2 4 of Alarms Card
+15V
+12
U1
7812K
VI
GND
VO
U2
7815K
VI
GND
VO
Q1
MJ3001
C1
470uF
35V
R1
10K 1%
To + Terminal of D2 Diode
Bridge
+20V
Title
Power Supply Main Card Circuit Diagram
Size
A4
Document Number
REV
Date:
Sheet
1 of
1

Main Power Supply — Bill Of Materials — Page 1

Item	Quantity	Reference	Part	Description	Part Order Code
1	1	R1	10K 1%	RESISTOR 1/4W 1%	RSM1/4FK0010
2	1	C1	470µF	ELECTROLYTIC CAPACITOR	CEA477BM350
3	1	U1	7812K	POS. STABILIZER 1.5A	CIL7812K
4	1	U2	7815K	POS. STABILIZER 1.5A	CIL7815K
5	1	Q1	MJ3001	POWER TRANSISTOR	TRNMJ3001

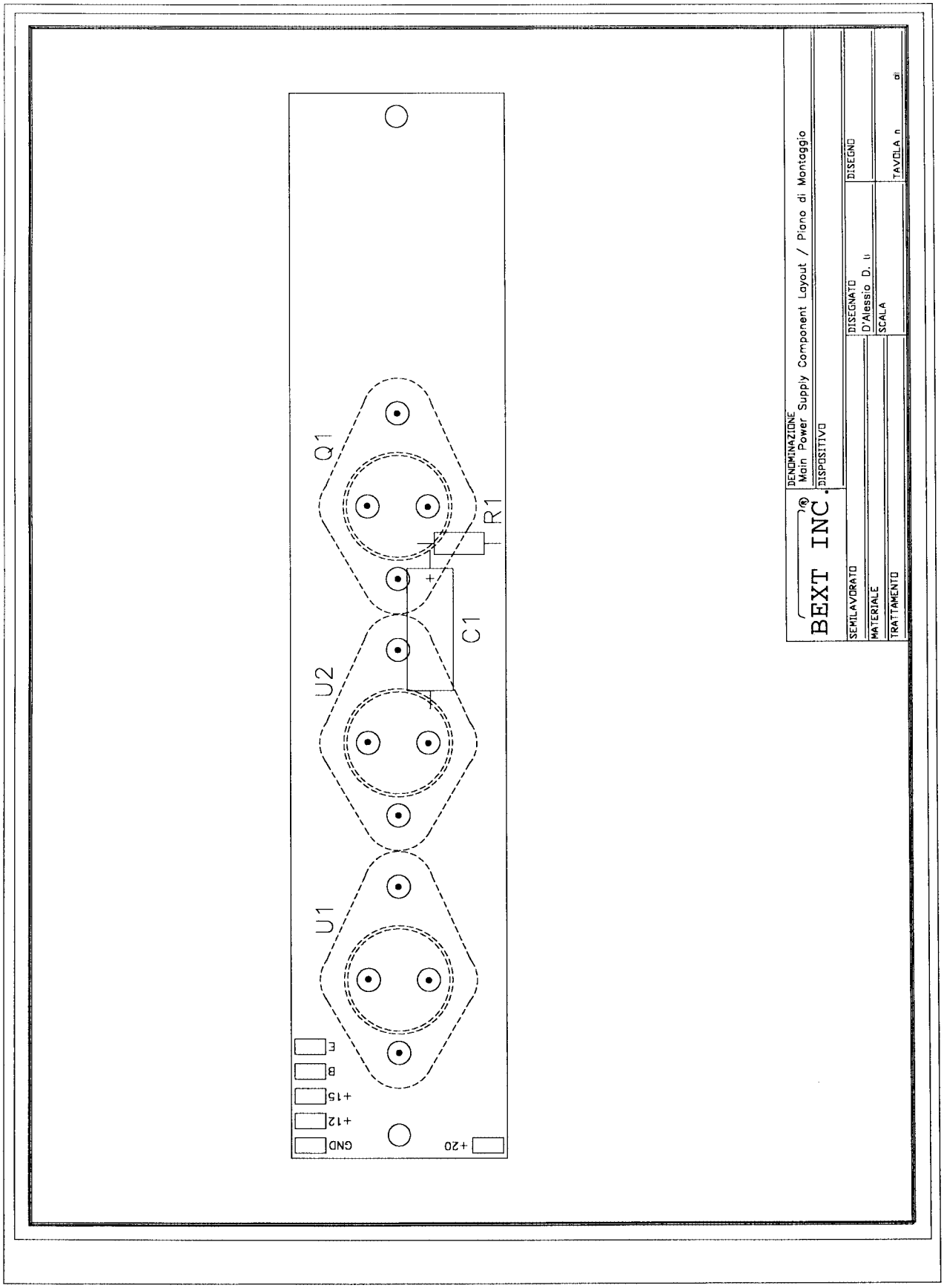
Q1
R1
C1
U2
U1
E
B
+15
+12
GND
+20
BEXT INC.
DENOMINAZIONE
Main Power Supply Component Layout / Piano di Montaggio
DISPOSITIVO
SEMILAVORATO
MATERIALE
TRATTAMENTO
DISEGNATO
D'Alessio D. u
SCALA
DISEGNO
TAVOLA n
di

SWITCHING 1 POWER SUPPLY

1	Circuit Diagram	Pag. 96
2	Bill of Materials	Pag. 97
3	Coponent Layout	Pag. 98

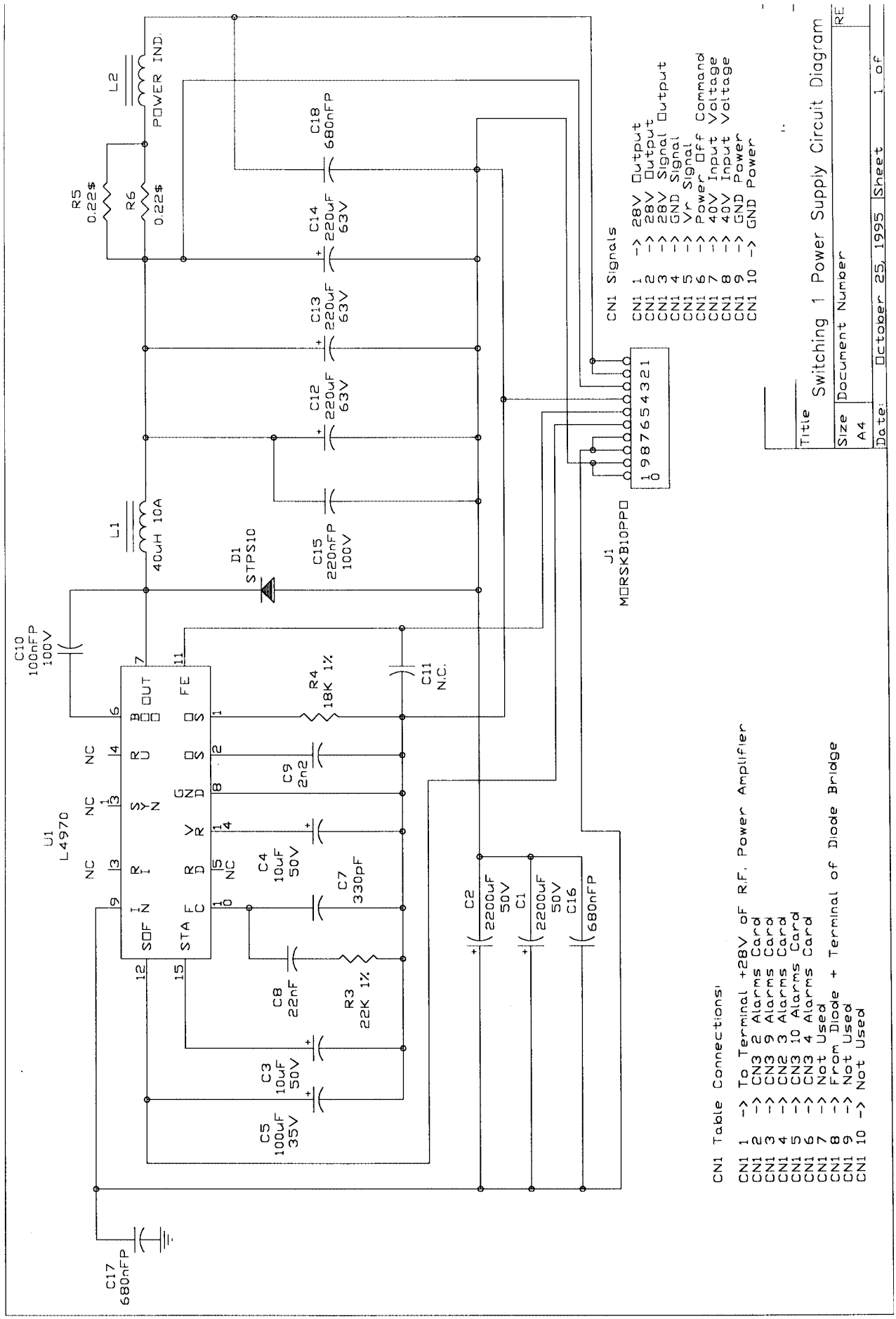
Switching 1 Power Supply Circuit Diagram
Title
Size A4
Document Number
RE
Date: October 25, 1995
Sheet 1 of
CN1 Signals
CN1 1 -> 28V Output
CN1 2 -> 28V Output
CN1 3 -> 28V Signal Output
CN1 4 -> GND Signal
CN1 5 -> Vr Signal
CN1 6 -> Power Off Command
CN1 7 -> 40V Input Voltage
CN1 8 -> 40V Input Voltage
CN1 9 -> GND Power
CN1 10 -> GND Power
CN1 Table Connections:
CN1 1 -> To Terminal +28V of R.F. Power Amplifier
CN1 2 -> CN3 2 Alarms Card
CN1 3 -> CN3 9 Alarms Card
CN1 4 -> CN2 3 Alarms Card
CN1 5 -> CN3 10 Alarms Card
CN1 6 -> CN3 4 Alarms Card
CN1 7 -> Not Used
CN1 8 -> From Diode + Terminal of Diode Bridge
CN1 9 -> Not Used
CN1 10 -> Not Used
U1 L4970
J1 MORSKB10PPO
L1 40uH 10A
L2 POWER IND.
D1 STPS10
R5 0.22$
R6 0.22$
C10 100nFP 100V
C11 N.C.
C17 680nFP
C18 680nFP
C14 220uF 63V
C13 220uF 63V
C12 220uF 63V
C15 220nFP 100V
R4 18K 1%
C9 2n2
C4 10uF 50V
C7 330pF
C8 22nF
R3 22K 1%
C3 10uF 50V
C5 100uF 35V
C2 2200uF 50V
C1 2200uF 50V
C16 680nFP

Switching 1 Power Supply Bill Of Materials Page 1

Item	Quantity	Reference	Part	Description	Part Order Code
1	2	R5,R6	0.22$	RESISTOR 5W	RAF005JH0,22
2	1	R4	18K 1%	RESISTOR 1/4W 1%	RSM1/4FK0018
3	1	R3	22K 1%	RESISTOR 1/4W 1%	RSM1/4FK0022
4	1	C7	330pF	CERAMIC CAPACITOR	CKM331BK600P
5	1	C9	2n2	CERAMIC CAPACITOR	CKM222BK600P
6	1	C8	22nF	CERAMIC CAPACITOR	CKM223BK600P
7	1	C10	100nFP	POLIESTER CAPACITOR	CPE104DK101
8	1	C15	220nFP	POLIESTER CAPACITOR	CPE224DK101
9	3	C16,C17,C18	680nFP	POLIESTER CAPACITOR	CPE684DK101
10	2	C3,C4	10µF	ELECTROLYTIC CAPACITOR	CEA106AM350
11	1	C5	100µF	ELECTROLYTIC CAPACITOR	CEA107BM350
12	3	C12,C13,C14	220µF	ELECTROLYTIC CAPACITOR	CEA227BM350
13	2	C1,C2	2200µF	ELECTROLYTIC CAPACITOR	CEA228CM350
14	1	L1	40µH 10A	TOROIDAL RF CHOKE 10A	IMP40U10A
15	1	L2	POWER IND.	RF BINOC. CHOCKE	
16	1	J1	MORSKB10PPO	MORS. LUMBERG F. CS 10P	MORSKB10PPO
17	1	D1	STPS10	RECTIFIER DIODE	DIDSTPS10
18	1	U1	L4970	SWITCHING REGULATOR	CILL4970
19	1	C11	N.C.	NOT CONNECTED	

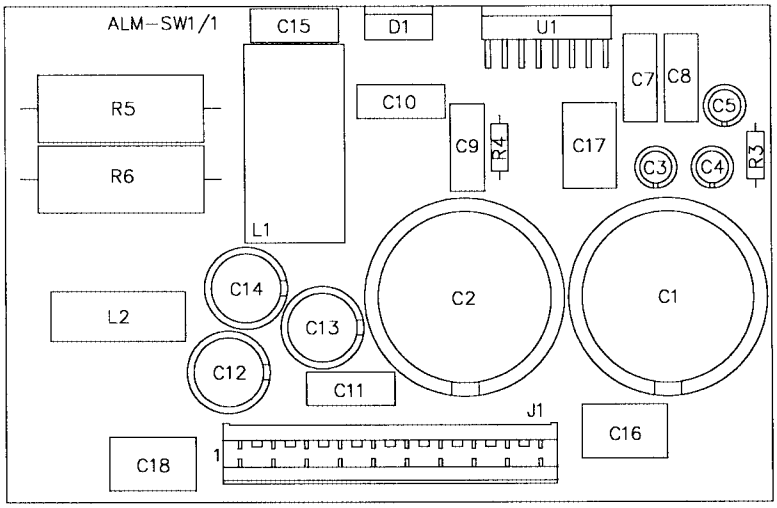

BEXT INC. ®	DENOMINAZIONE Switching 1 Power Supply Component Layout / Piano di Montaggio		
	DISPOSITIVO		
SEMILAVORATO		DISEGNATO D'Alessio D. li	DISEGNO
MATERIALE		SCALA	
TRATTAMENTO			TAVOLA n 1 di 1

SWITCHING 2 POWER SUPPLY

1	Circuit Diagram	Pag. 100
2	Bill of Materials	Pag. 101
3	Coponent Layout	Pag. 102

TEX150 and TEX150/S Technical and Maintenance Manual

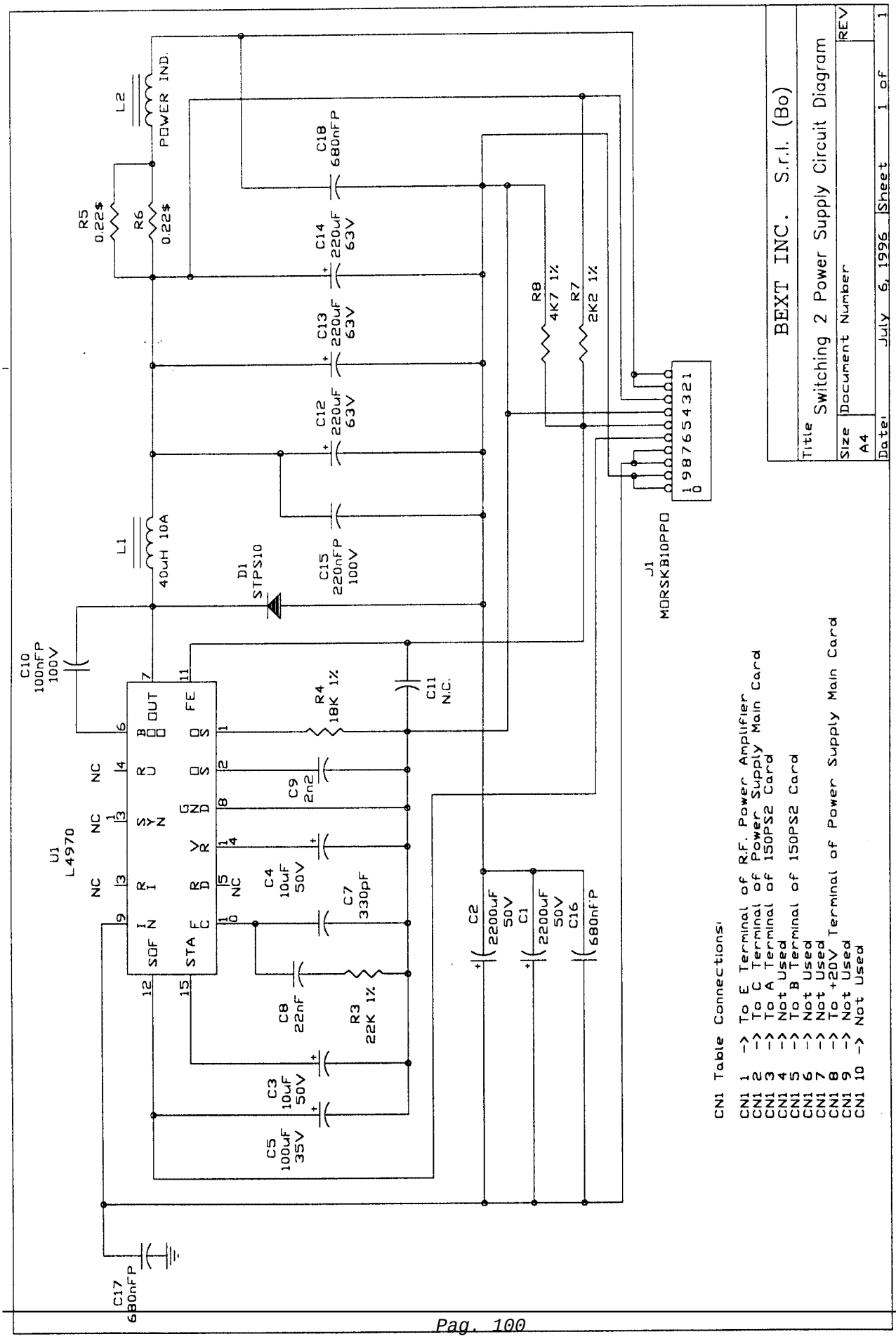

Switching 2 Power Supply Bill Of Materials Page 1

Item	Quantity	Reference	Part	Description	Part Order Code
1	2	R5,R6	0.22$	RESISTOR 5W	RAF005JH0,22
2	1	R7	2K2 1%	RESISTOR 1/4W 1%	RSC1/4FK02,2
3	1	R8	4K7 1%	RESISTOR 1/4W 1%	RSM1/4FK04,7
4	1	R4	18K 1%	RESISTOR 1/4W 1%	RSM1/4FK0018
5	1	R3	22K 1%	RESISTOR 1/4W 1%	RSM1/4FK0022
6	1	C7	330pF	CERAMIC CAPACITOR	CKM331BK600P
7	1	C9	2n2	CERAMIC CAPACITOR	CKM222BK600P
8	1	C8	22nF	CERAMIC CAPACITOR	CKM223BK600P
9	1	C10	100nFP	POLIESTER CAPACITOR	CPE104DK101
10	1	C15	220nFP	POLIESTER CAPACITOR	CPE224DK101
11	3	C16,C17,C18	680nFP	POLIESTER CAPACITOR	CPE684DK101
12	2	C3,C4	10µF	ELECTROLYTIC CAPACITOR	CEA106AM350
13	1	C5	100µF	ELECTROLYTIC CAPACITOR	CEA107BM350
14	3	C12,C13,C14	220µF	ELECTROLYTIC CAPACITOR	CEA227BM350
15	2	C1,C2	2200µF	ELECTROLYTIC CAPACITOR	CEA228CM350
16	1	L1	40µH 10A	TOROIDAL RF CHOKE 10A	IMP40U10A
17	1	L2	POWER IND.	RF BINOC. CHOCKE	
18	1	J1	MORSKB10PPO	MORS. LUMBERG F. CS 10P	MORSKB10PPO
19	1	D1	STPS10	RECTIFIER DIODE	DIDSTPS10
20	1	U1	L4970	SWITCHING REGULATOR	CILL4970
21	1	C11	N.C.	NOT CONNECTED	

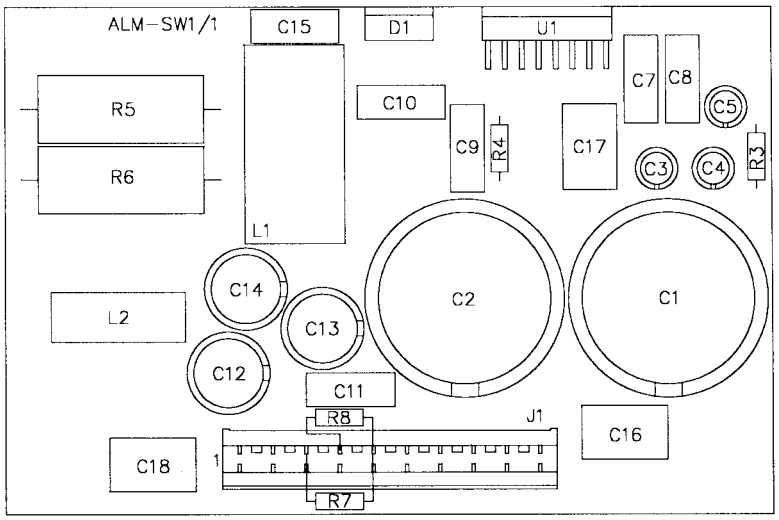

BEXT INC. ®

DENOMINAZIONE
Switching 1 Power Supply Component Layout / Piano di Montaggio

DISPOSITIVO

SEMILAVORATO	DISEGNATO D'Alessio D. li	DISEGNO
MATERIALE	SCALA	
TRATTAMENTO		TAVOLA n 1 di 1

MONO/MPX CARD

1	Circuit Diagram	Pag. 104
2	Bill of Materials	Pag. 105
3	Coponent Layout	Pag. 108

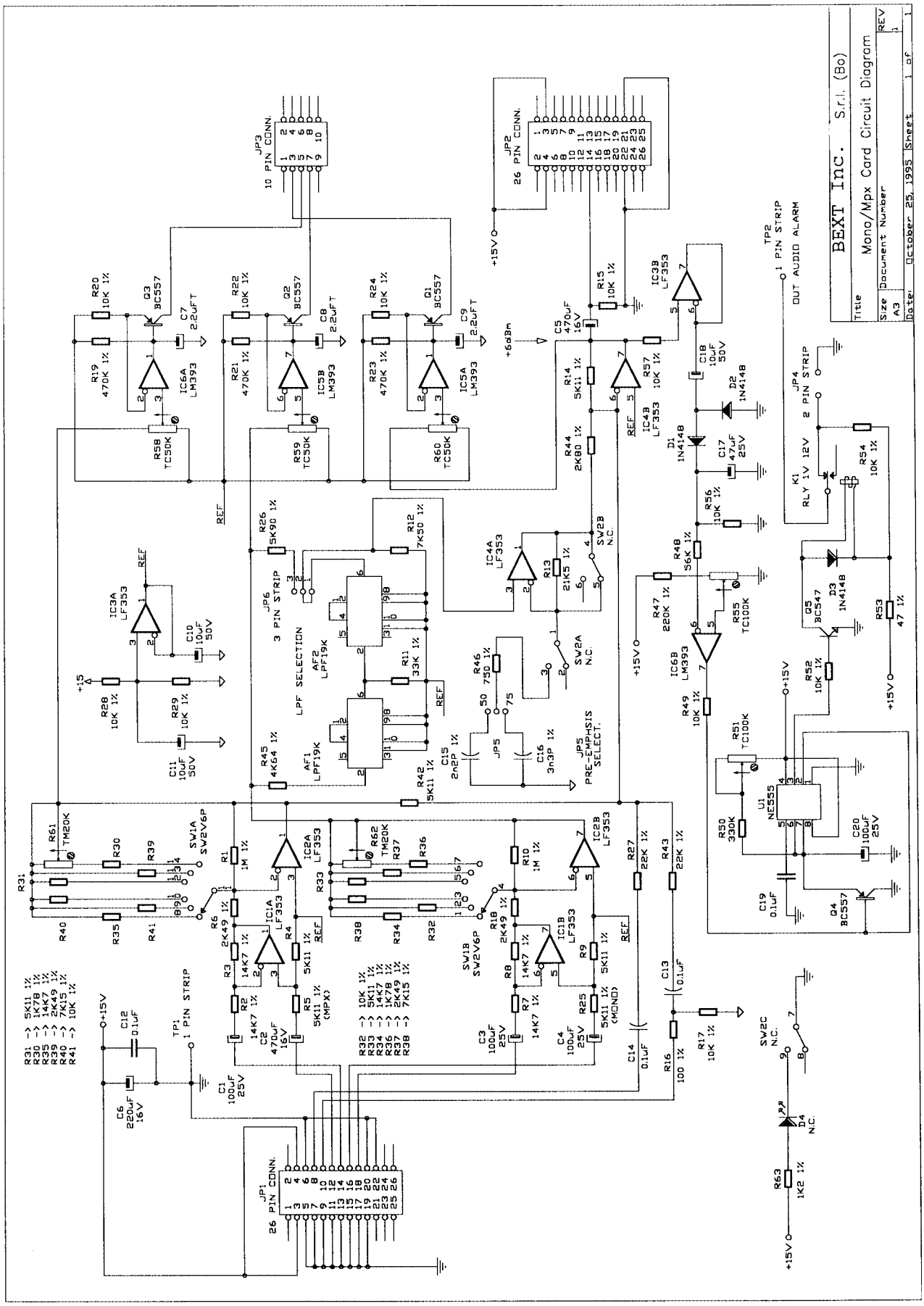
BEXT Inc. S.r.l. (Bo)
Title
Mono/Mpx Card Circuit Diagram
Size A3
Document Number
REV 1
Date: October 25, 1995
Sheet 1 of 1
JP1 26 PIN CONN.
JP2 26 PIN CONN.
JP3 10 PIN CONN.
JP4 2 PIN STRIP
JP5 PRE-EMPHSIS SELECT.
JP6 3 PIN STRIP
LPF SELECTION
TP1 1 PIN STRIP
TP2 1 PIN STRIP OUT AUDIO ALARM
K1 RLY 1V 12V
+15V
+6dBm
REF

Mono/MPX Card Bill Of Materials Page 1

Item	Quantity	Reference	Part	Description	Part Order Code
1	1	R53	47 1%	RESISTOR 1/4W 1%	RSM1/4FH0047
2	1	R16	100 1%	RESISTOR 1/4W 1%	RSM1/4FH0100
3	1	R46	750 1%	RESISTOR 1/4W 1%	RSM1/4FH0750
4	1	R63	1K2 1%	RESISTOR 1/4W 1%	RSM1/4FK01,2
5	2	R30,R36	1K78 1%	RESISTOR 1/4W 1%	RSM1/4FK1,78
6	4	R6,R18, R37,R39	2K49 1%	RESISTOR 1/4W 1%	RSM1/4FK2,49
7	1	R44	2K80 1%	RESISTOR 1/4W 1%	RSM1/4FK2,80
8	1	R45	4K64 1%	RESISTOR 1/4W 1%	RSM1/4FK4,64
9	8	R4,R5,R9, R14,R25, R31,R33,R42	5K11 1%	RESISTOR 1/4W 1%	RSM1/4FK5,11
10	1	R26	5K90 1%	RESISTOR 1/4W 1%	RSM1/4FK5,90
11	2	R38,R40	7K15 1%	RESISTOR 1/4W 1%	RSM1/4FK7,15
12	1	R12	7K50 1%	RESISTOR 1/4W 1%	RSM1/4FK7,50
13	14	R15,R17, R20,R22, R24,R28, R29,R32, R41,R49, R52,R54, R56,R57	10K 1%	RESISTOR 1/4W 1%	RSM1/4FK0010
14	6	R2,R3,R7, R8,R34,R35	14K7 1%	RESISTOR 1/4W 1%	RSM1/4FK14,7
15	1	R13	21K5 1%	RESISTOR 1/4W 1%	RSM1/4FK21,5
16	2	R27,R43	22K 1%	RESISTOR 1/4W 1%	RSM1/4FK0022
17	1	R11	33K 1%	RESISTOR 1/4W 1%	RSM1/4FK0033
18	1	R48	56K 1%	RESISTOR 1/4W 1%	RSM1/4FK0056
19	1	R47	220K 1%	RESISTOR 1/4W 1%	RSM1/4FK0220
20	1	R50	330K	RESISTOR 1/4W 5%	RSC1/4JK0330
21	3	R19,R21,R23	470K 1%	RESISTOR 1/4W 1%	RSC1/4FK0470
22	2	R1,R10	1M 1%	RESISTOR 1/4W 1%	RSM1/4FM0001

Mono/MPX Card Bill Of Materials Page 2

Item	Quantity	Reference	Part	Description	Part Order Code
23	3	R58,R59,R60	TC50K	TRIM. REG. VERT. CERMET	RVTCERVK0050
24	2	R51,R55	TC100K	TRIM. REG. VERT. CERMET	RVTCERVK0100
25	2	R61,R62	TM20K	TRIM. MULT. REG. VERT.	RVTMULVK0020
26	1	C15	2n2P 1%	POLIESTER CAPACITOR	CPE222BF63
27	1	C16	3n3P 1%	POLIESTER CAPACITOR 1%	CPE332BF101
28	4	C12,C13,	0.1µF	CERAMIC CAPACITOR	CKM104BK600P
29	3	C7,C8,C9	2.2µFT	TANTALIUM CAPACITOR	CET225AM350
30	3	C10,C11,C18	10µF	ELECTROLYTIC CAPACITOR	CEA106AM350
31	1	C17	47µF	ELECTROLYTIC CAPACITOR	CEA476BM630
32	4	C1,C3,C4, C20	100µF	ELECTROLYTIC CAPACITOR	CEA107BM350
33	1	C6	220µF	ELECTROLYTIC CAPACITOR	CEA227BM350
34	2	C2,C5	470µF	ELECTROLYTIC CAPACITOR	CEA477BM350
35	2	AF1,AF2	LPF19K	19KHZ LOW PASS FILTER	FLP19KHZ
36	2	TP1,TP2	1 PIN STRIP	STRIP M 1 PIN	CNTSTRIPMCS
37	1	JP4	2 PIN STRIP	STRIP M P 2.54 2 PIN	CNTSTRIPMCS
38	2	JP5,JP6	3 PIN STRIP	STRIP M P 2.54 3 PIN	CNTSTRIPMCS
39	1	JP3	10P CONN.	CONN. M 2*5 P 2.54	CNTMCSFC10P
40	2	JP1,JP2	26P CONN.	CONN. M 2*13 P 2.54	CNTMCSFC26P
41	1	K1	RLY 1V 12V	RELAY 1 VIA 12V	RLD112
42	1	SW1	SW2V6P	COMM. 2 VIE 6 POS FEME	COMR2V6PCS
43	3	D1,D2,D3	1N4148	SILICON DIODE	DIS1N4148
44	1	Q5	BC547	NPN TRANSISTOR	TRNBC547
45	4	Q1,Q2,Q3,Q4	BC557	PNP TRANSISTOR	TRNBC557
46	2	IC5,IC6	LM393	DOUBLE COMPARATOR	CILLM393

Mono/MPX Card Bill Of Materials Page 3

Item	Quantity	Reference	Part	Description	Part Order Code
47	4	IC1,IC2, IC3,IC4	LF353	DOUBLE OP. AMP.	CILLF353
48	1	U1	NE555	TIMER	CIL555
49	2	SW2,D4	N.C.	NOT CONNECTED	

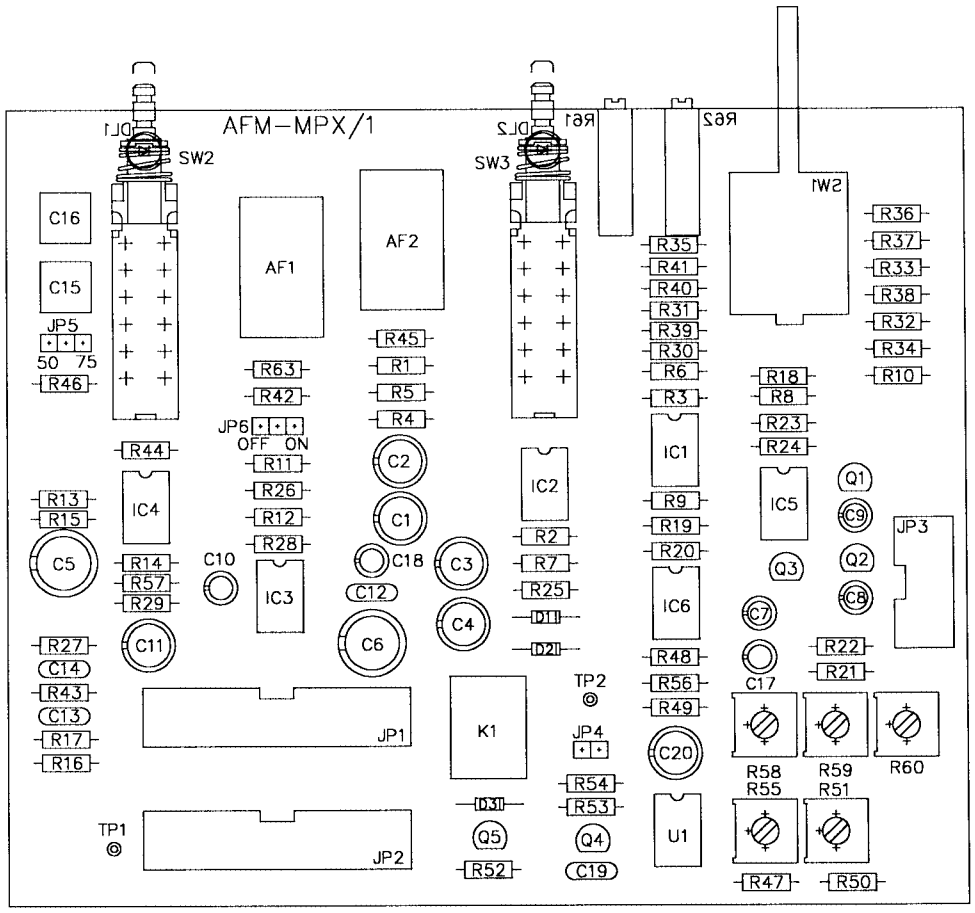

BEXT INC.®	DENOMINAZIONE Mono/MPX Card Component Layout / Piano di Montaggio		
	DISPOSITIVO		
SEMILAVORATO		DISEGNATO D'Alessio D. li	DISEGNO
MATERIALE		SCALA	
TRATTAMENTO			TAVOLA n di

STEREO CODER CARD

1	Circuit Diagram	Pag. 110
2	Bill of Materials	Pag. 111
3	Coponent Layout	Pag. 115

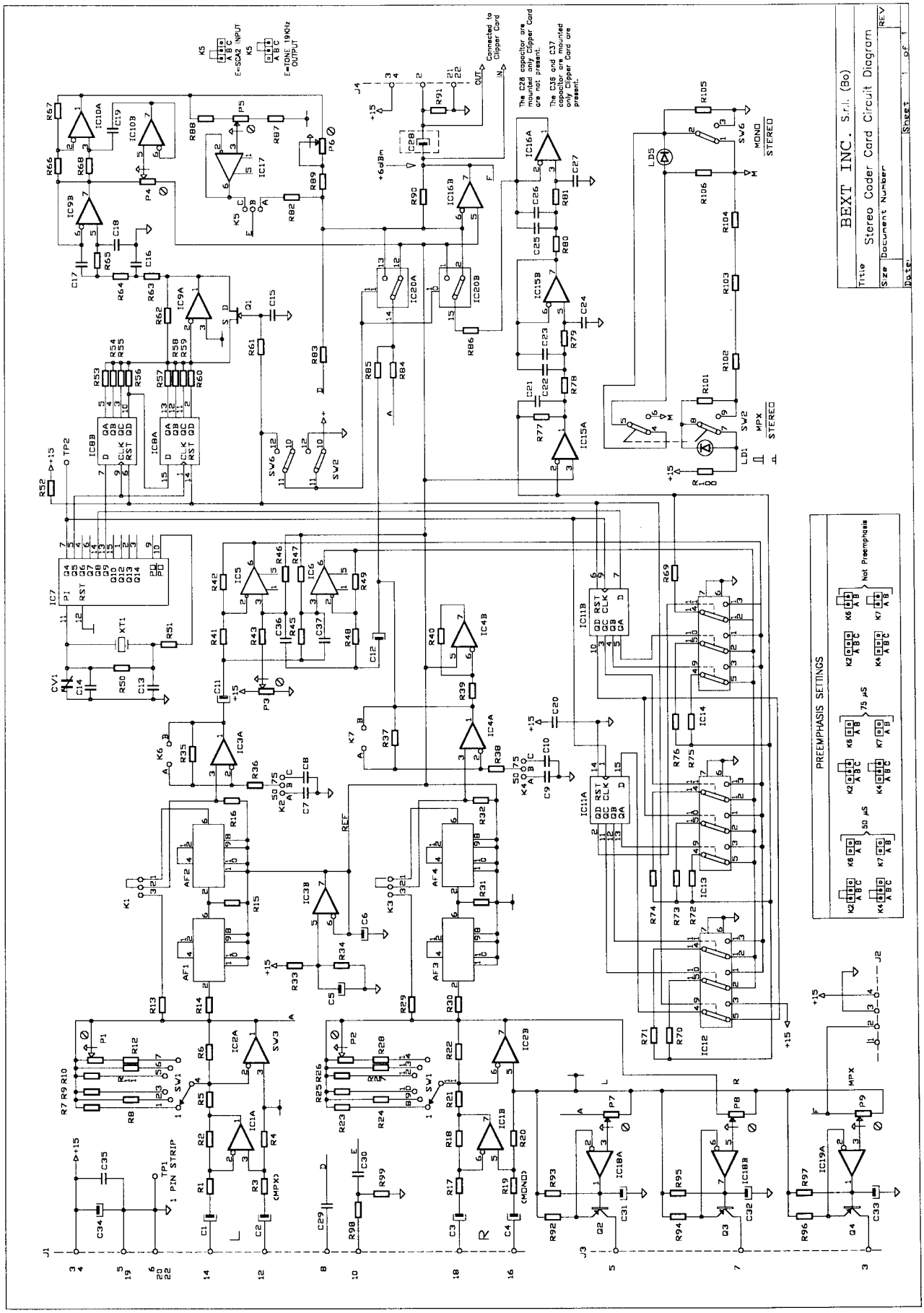
BEXT INC. S.r.l. (Bo)
Title
Stereo Coder Card Circuit Diagram
Size
Document Number
REV
Date:
Sheet 1 of 1
PREEMPHASIS SETTINGS
Not Preemphasis
50 µS
75 µS
The C28 capacitor are mounted only Clipper Card are not present.
The C36 and C37 capacitor are mounted only Clipper Card are present.
Connected to Clipper Card
E=SCA2 INPUT
E=TONE 19KHz OUTPUT
MONO
STEREO
MPX
STEREO
1 PIN STRIP

Stereo Coder Card Bill Of Materials Page 1

Item	Quantity	Reference	Part	Description	Part Order Code
1	1	R98	100	RESISTOR 1/4W 5%	RSC1/4JH0100
2	5	R46,R47, R101,R105, R106	200 1%	RESISTOR 1/4W 1%	RSC1/4FH0200
3	1	R51	330	RESISTOR 1/4W 5%	RSC1/4JH0330
4	2	R78,R79	464 1%	RESISTOR 1/4W 1%	RSM1/4FH0464
5	1	R87	499 1%	RESISTOR 1/4W 1%	RSM1/4FH0499
6	2	R36,R38	750 1%	RESISTOR 1/4W 1%	RSM1/4FH0750
7	1	R100	1K	RESISTOR 1/4W 5%	RSC1/4JK0001
8	1	R45	1K13 2%	RESISTOR 1/4W 2%	RSM1/4GK1,13
9	4	R12,R28, R80,R81	1K78 1%	RESISTOR 1/4W 1%	RSM1/4FK1,78
10	5	R5,R11,R21, R27,R85	2K49 1%	RESISTOR 1/4W 1%	RSM1/4FK2,49
11	6	R62,R63, R64,R65, R66,R67	3K83 1%	RESISTOR 1/4W 1%	RSC1/4FK3,83
12	1	R84	4K42 1%	RESISTOR 1/4W 1%	RSM1/4FK4,42
13	2	R14,R30	4K64 1%	RESISTOR 1/4W 1%	RSM1/4FK4,64
14	10	R3,R4,R10, R19,R20, R26,R39, R40,R86, R90	5K11 1%	RESISTOR 1/4W 1%	RSM1/4FK5,11
15	2	R13,R29	5K90 1%	RESISTOR 1/4W 1%	RSM1/4FK5,90
16	2	R9,R25	7K15 1%	RESISTOR 1/4W 1%	RSM1/4FK7,15
17	2	R16,R32	7K50 1%	RESISTOR 1/4W 1%	RSM1/4FK7,50
18	1	R88	9K09 1%	RESISTOR 1/4W 1%	RSM1/4FK9,09
19	9	R8,R24, R33,R34, R41,R48, R92,R94, R96	10K0 1%	RESISTOR 1/4W 1%	RSC1/4FK10,0
20	1	R99	10K	RESISTOR 1/4W 5%	RSC1/4JK0010
21	1	R77	12K7 1%	RESISTOR 1/4W 1%	RSM1/4FK12,7

Stereo Coder Card Bill Of Materials Page 2

Item	Quantity	Reference	Part	Description	Part Order Code
22	6	R1,R2,R7, R17,R18,R23	14K7 1%	RESISTOR 1/4W 1%	RSM1/4FK14,7
23	1	R52	15K	RESISTOR 1/4W 5%	RSC1/4JK0015
24	2	R42,R49	17K8 1%	RESISTOR 1/4W 1%	RSC1/4FK17,8
25	1	R68	20K0 1%	RESISTOR 1/4W 1%	RSM1/4FK20,0
26	2	R35,R37	21K5 1%	RESISTOR 1/4W 1%	RSM1/4FK21,5
27	2	R82,R83	24K9 1%	RESISTOR 1/4W 1%	RSM1/4FK24,9
28	2	R15,R31	33K	RESISTOR 1/4W 5%	RSC1/4JK0033
29	1	R89	40K2 1%	RESISTOR 1/4W 1%	RSM1/4FK40,2
30	1	R91	47K	RESISTOR 1/4W 5%	RSC1/4JK0047
31	4	R56,R57, R72,R73	64K9 1%	RESISTOR 1/4W 1%	RSM1/4FK64,9
32	4	R55,R58, R71,R74	75K0 1%	RESISTOR 1/4W 1%	RSM1/4FK75,0
33	1	R50	100K	RESISTOR 1/4W 5%	RSC1/4JK0100
34	4	R54,R59, R70,R75	115K 1%	RESISTOR 1/4W 1%	RSM1/4FK0115
35	2	R43,R61	150K	RESISTOR 1/4W 5%	RSC1/4JK0150
36	4	R53,R60, R69,R76	324K 1%	RESISTOR 1/4W 1%	RSM1/4FK0324
37	3	R93,R95, R97	470K	RESISTOR 1/4W 5%	RSC1/4JK0470
38	2	R6,R22	1M	RESISTOR 1/4W 5%	RSC1/4JM0001
39	1	P5	TC1K	TRIMM.REG.VERT. CERMET	RVTCERVK0001
40	2	P3,P6	TC20K	TRIMM.REG.VERT. CERMET	RVTVERVK0020
41	3	P7,P8,P9	TC50K	TRIMM.REG. VERT. CERMET	RVTCERVK0050
42	2	P1,P2	M20K	TRIMMER MULTIGIRI	RVTMULAK0020
43	1	P4	TM5K	TRIMM.MULT.REG. VERT.	RVTMULVK0005
44	1	CV1	T8pF	TRIMMER CAPACITOR	CVC080CK600
45	1	C14	8p2	CERAMIC CAPACITOR NP0	CKM8,2BJ600C

Stereo Coder Card Bill Of Materials Page 3

Item	Quantity	Reference	Part	Description	Part Order Code
46	1	C23	27pF	CERAMIC CAPACITOR NP0	CKM270BJ600C
47	3	C13,C21, C25	47PF	CERAMIC CAPACITOR NP0	CKM470BJ600C
48	2	C36,C37	68pF	CERAMIC CAPACITOR NP0	CKM680BJ600C
49	1	C27	100pFP 1%	POLIESTER CAPACITOR 1%	CPE101BF63
50	2	C18,C19	150pFP 1%	POLIESTER CAPACITOR 1%	CPE151BF63
51	3	C16,C24, C26	1nFP 1%	POLIESTER CAPACITOR 1%	CPE102BF63
52	1	C22	1n5FP 1%	POLIESTER CAPACITOR 1%	CPE152BF63
53	2	C7,C9	2n2P 1%	POLIESTER CAPACITOR	CPE222BF63
54	1	C17	2n7P 1%	POLIESTER CAPACITOR 1%	CPE272BF63
55	2	C8,C10	3n3P 1%	POLIESTER CAPACITOR 1%	CPE332BF101
56	4	C15,C20, C29,C30	0.1uF	CERAMIC CAPACITOR	CKM104BK600P
57	1	C35	0.47uF	POLIESTER CAPACITOR	CPE474EK101
58	3	C31,C32, C33	2.2uF	ELECTROLYTIC CAPACITOR	CEA225AM630
59	1	C5	10uF	ELECTROLYTIC CAPACITOR	CEA106AM350
60	7	C1,C2,C3, C4,C6, C11,C12	100uF	ELECTROLYTIC CAPACITOR	CEA107BM350
61	2	C28,C34	220uF	ELECTROLYTIC CAPACITOR	CEA227BM350
62	4	AF1,AF2, AF3,AF4	LPF19K	LOW PASS FILTER 19KHZ	FLP19KHZ
63	2	TP1,TP2	1 P STRIP	STRIP M 1 PIN	CNTSTRIPMCS
64	2	K6,K7	2 P STRIP	STRIP M P 2.54 2 PIN	CNTSTRIPMCS
65	5	K1,K2,K3, K4,K5	3 P STRIP	STRIP M P 2.54 3 PIN	CNTSTRIPMCS
66	1	J2	4 P STRIP	STRIP M P 2.54 4 PIN	CNTSTRIPMCS
67	3	J1,J4,J6	26 P CONN.	CONN. M 2*13 P 2.54	CNTMCSFC26P
68	1	XT1	Q9.728MHZ	CRYSTAL	QRZ9,728HC18

Stereo Coder Card Bill Of Materials Page 4

Item	Quantity	Reference	Part	Description	Part Order Code
69	1	SW1	SW2V6P	COMMUTATORE 2V 6P FEME	COMR2V6PCS
70	2	SW2,SW6	SWSPDT-4	COMMUTATORE 4V 2P	COMR4V2PCS
71	2	LD1,LD5	LED-G5	GREEN LED DIODE	LEDVE05
72	3	Q2,Q3,Q4	BC557	PNP TRANSISTOR	TRNBC557
73	1	Q1	MPF4393	JFET SWITCH. N-CHANNEL	TRNMPF4393
74	2	IC18,IC19	LM393	DOUBLE COMPARATOR	CILLM393
75	8	IC1,IC2, IC3,IC4, IC9,IC10, IC15,IC16	LF353	DOUBLE OP. AMP.	CILLF353
76	3	IC5,IC6, IC17	LF356	JPFET IN. OP. AMPLIFIER	CILLF356
77	2	IC8,IC11	4015	SHIFT REGISTER	CID4015
78	4	IC12,IC13, IC14,IC20	4053	TRIPLE 2CH ANAL.MULTIP.	CID4053
79	1	IC7	4060	CMOS BIN DIVIDER	CID4060
80	3	R102,R103, R104	WIRE	COLLEGAMENTO A FILO	FILO

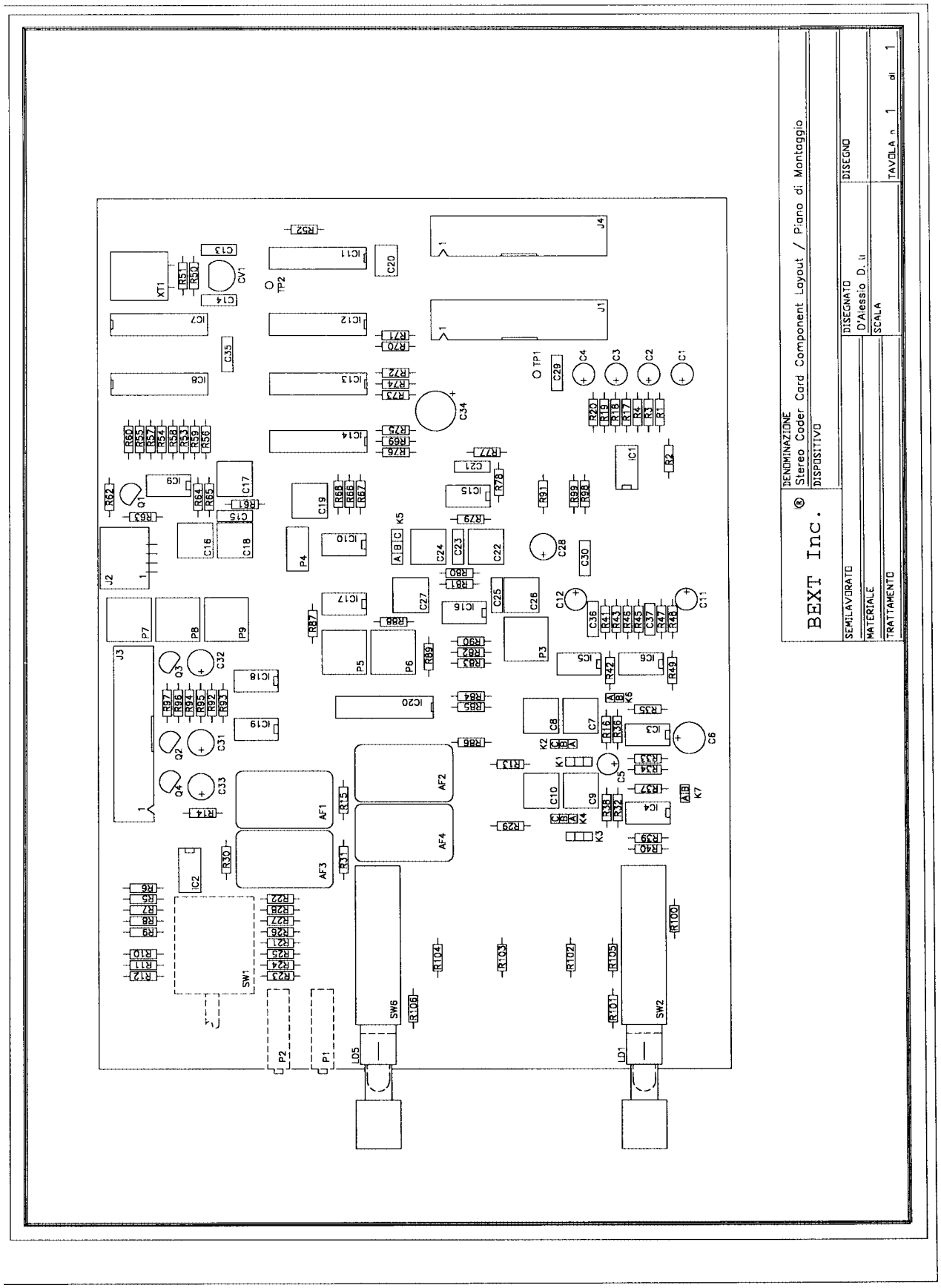
DENOMINAZIONE
Stereo Coder Card Component Layout / Piano di Montaggio
DISPOSITIVO
BEXT Inc.
DISEGNATO
D'Alessio D.
DISEGNO
SCALA
TAVOLA n. 1 di 1
SEMILAVORATO
MATERIALE
TRATTAMENTO

R.F. POWER AMPLIFIER

1	Circuit Diagram	Pag. 117
2	Bill of Materials	Pag. 118
3	Coponent Layout	Pag. 119

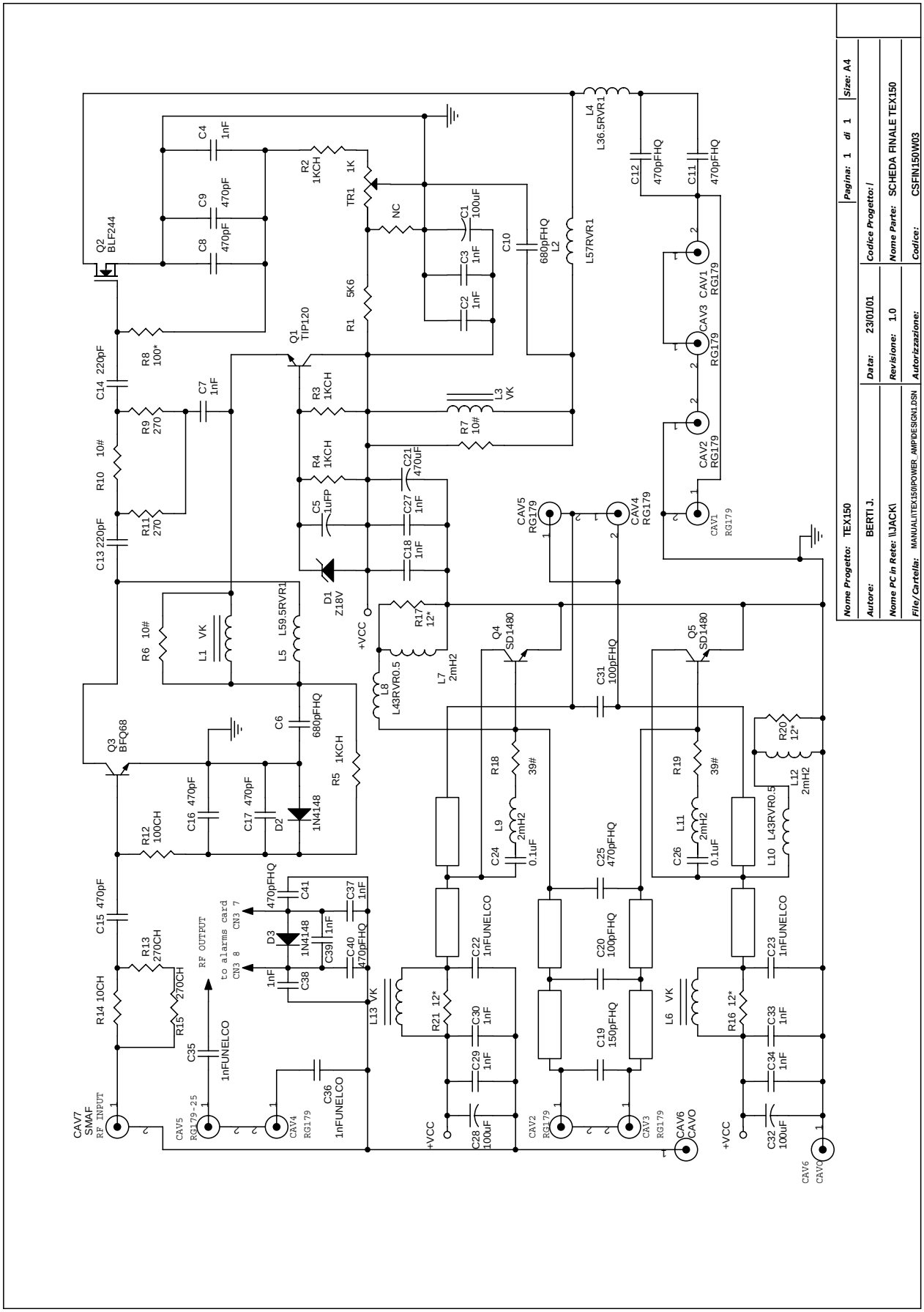
Nome Progetto: TEX150
Pagina: 1 di 1
Size: A4
Autore: BERTI J.
Data: 23/01/01
Codice Progetto: /
Nome PC in Rete: \\JACK\
Revisione: 1.0
Nome Parte: SCHEDA FINALE TEX150
File/Cartella: MANUALI\TEX150\POWER_AMP\DESIGN1.DSN
Autorizzazione:
Codice: CSFIN150W03
CAV7 SMAF RF INPUT
CAV5 RG179-25
CAV4 RG179
CAV2 RG179
CAV3 RG179
CAV6 CAVO
CAV1 RG179
RF OUTPUT
to alarms card CN3 8 CN3 7
+VCC
Q2 BLF244
Q1 TIP120
Q3 BFQ68
Q4 SD1480
Q5 SD1480
D1 Z18V
D2 1N4148
D3 1N4148
L1 VK
L2 L57RVR1
L3 VK
L4 L36.5RVR1
L5 L59.5RVR1
L6 VK
L7 2mH2
L8 L43RVR0.5
L9 2mH2
L10 L43RVR0.5
L11 2mH2
L12 2mH2
L13 VK
TR1 1K
R1 5K6
R2 1KCH
R3 1KCH
R4 1KCH
R5 1KCH
R6 10#
R7 10#
R8 100*
R9 270
R10 10#
R11 270
R12 100CH
R13 270CH
R14 10CH
R15 270CH
R16 12*
R17 12*
R18 39#
R19 39#
R20 12*
R21 12*
C1 100uF
C2 1nF
C3 1nF
C4 1nF
C5 1uFP
C6 680pFHQ
C7 1nF
C8 470pF
C9 470pF
C10 680pFHQ
C11 470pFHQ
C12 470pFHQ
C13 220pF
C14 220pF
C15 470pF
C16 470pF
C17 470pF
C18 1nF
C19 150pFHQ
C20 100pFHQ
C21 470uF
C22 1nFUNELCO
C23 1nFUNELCO
C24 0.1uF
C25 470pFHQ
C26 0.1uF
C27 1nF
C28 100uF
C29 1nF
C30 1nF
C31 100pFHQ
C32 100uF
C33 1nF
C34 1nF
C35 1nFUNELCO
C36 1nFUNELCO
C37 1nF
C38 1nF
C39 1nF
C40 470pFHQ
C41 470pFHQ
NC

XT 150 (150 F.M. EXCITER) Bill Of Materials Page1

Item	Q.ty	Reference	Part	Description Part	Order Code
1	1	CAV1	RG179	CAVO SCHERMATO 25Ohm 23cm	
2	2	CAV2,CAV3	RG179	CAVO SCHERMATO 25Ohm 13cm	
3	2	CAV4,CAV5	RG179	CAVO SCHERMATO 25Ohm 24cm	
4	1	CAV6	CAVO	CAVO DIA 1.5 11.5cm	
5	1	CAV7	SMAF	CONN. SMA F TELAIO	
7	3	C1,C28,C32	100Uf	ELECTROLYTIC CAPACITOR	
8	13	C2,C3,C4,C7,C18,C27, C29,C30,C33,C34,C37, C38,C39	1nf	CERAMIC CAPACITOR	
9	1	C5	1uFT	TANATALIUM CAPACITOR	
10	2	C6,C10	680pFHQ	HIGH Q CAPACITOR ATC	
11	4	C8,C9,C16,C17	470pF		
13	5	C11,C12,C25,C40,C41	470pFHQ	HIGH Q CAPACITOR ATC	
14	2	C13,C14	220pF	CERAMIC CAPACITOR NP0	
16	1	C15	470pF	CERAMIC CAPACITOR	
17	1	C19	150pFHQ	HIGH Q CAPACITOR ATC	
18	2	C20,C31	100pFHQ	HIGH Q CAPACITOR ATC	
19	1	C21	470uF	ELECTROLYTIC CAPACITOR	
20	4	C22,C23,C35,C36	1nFUNELCO	SILVER MICA CAPACITOR	
21	2	C26,C24	0.1uF	CERAMIC CAPACITOR	
24	1	D1	Z18V	ZENER DIODE 18V 0.4W	
25	2	D2,D3	1N4148	SILICON DIODE	
26	4	L1,L3,L6,L13	VK	RF CHOKE	
27	1	L2	L57RVR1	5SP DIA7 RAME AR 1mm	
28	1	L4	L36.5RVR1	3SP DIA6.5 RAME AR 1mm	
29	1	L5	L59.5RVR1	5SP DIA9.5 RAME AR 1mm	
30	4	L7,L9,L11,L12	2mH2	IMPEDENZA	
31	2	L10,L8	L43RVR0.5	4 SP DIA3 RAME SM 0.5mm	
32	1	NC	N.C.	NON CONNESSO	
33	1	Q1	TIP120	NPN DARLINGTON	
34	1	Q2	BLF244	TRANSISTOR BLF244	
35	1	Q3	BFQ68	NPN RF TRANSISTOR	
36	2	Q4,Q5	SD1480	RF POWER TRANSISTOR	
37	1	R1	5K6	RESISTOR 1/4W 5%	
38	4	R2,R3,R4,R5	1KCH	CHIP RESISTOR	
39	3	R6,R7,R10	10#	RESISTOR 2W	
40	1	R8	100*	RESISTOR 1/2W 5%	
41	2	R11,R9	270	RESISTOR 1/4W 5%	
42	1	R12	100CH	CHIP RESISTOR	
43	2	R15,R13	270CH	CHIP RESISTOR	
44	1	R14	10CH	CHIP RESISTOR	
45	4	R16,R17,R20,R21	12*	RESISTOR 1/2W 5%	
46	2	R19,R18	39#	RESISTOR 2W	
47	1	TR1	1K		

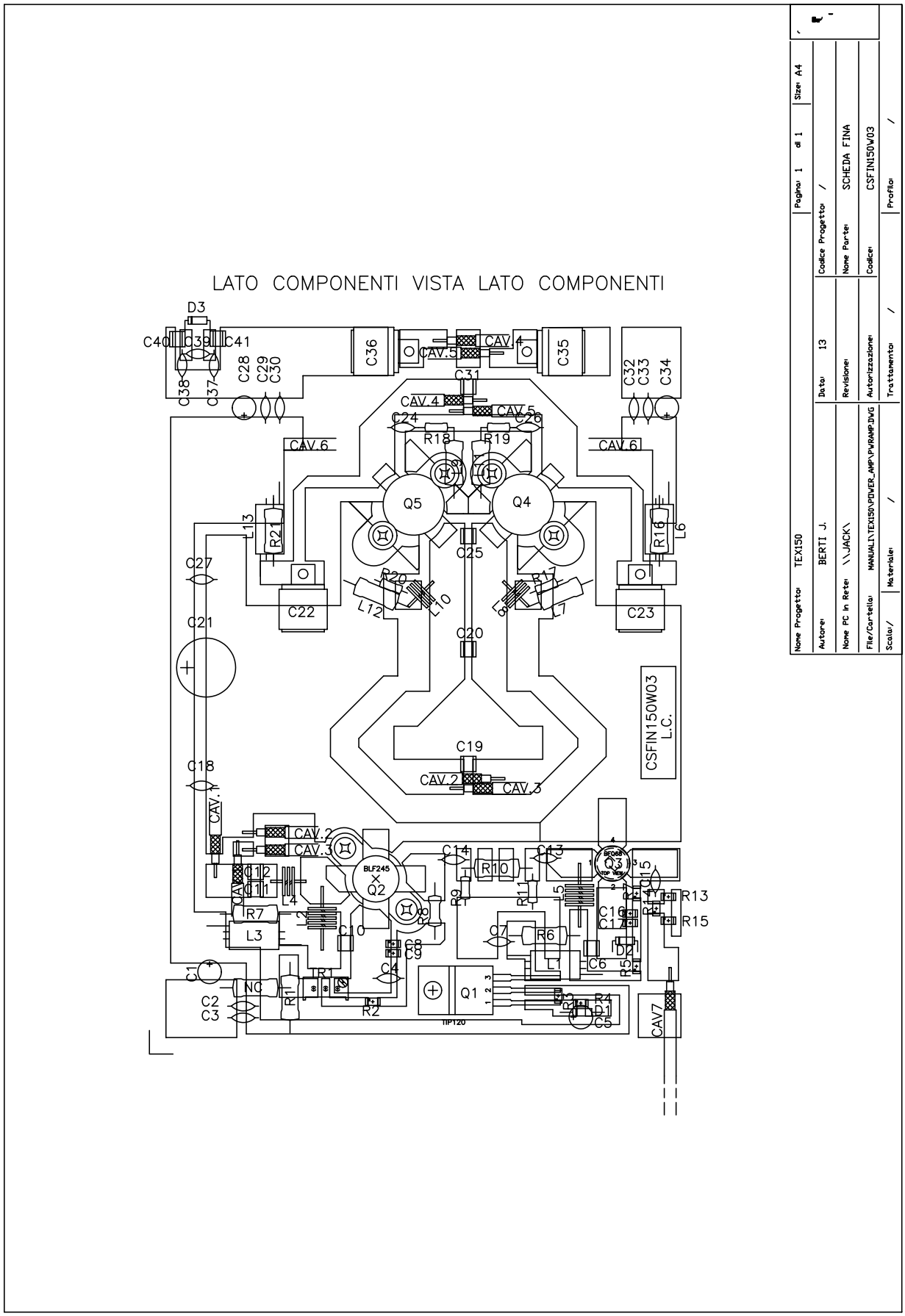
LATO COMPONENTI VISTA LATO COMPONENTI
Nome Progetto: TEX150
Autore: BERTI J.
Nome PC in Rete: \\JACK\
File/Cartella: MANUALI\TEX150\POWER_AMP\PWRAMP.DWG
Scala: /
Materiale: /
Data: 13
Revisione:
Autorizzazione:
Trattamento: /
Pagina: 1 di 1
Size: A4
Codice Progetto: /
Nome Parte: SCHEDA FINA
Codice: CSFIN150W03
Profilo: /
CSFIN150W03
L.C.
BLF245
TIP120

LOW PASS FILTER

1	Circuit Diagram	Pag. 121
2	Bill of Materials	Pag. 122
3	Coponent Layout	Pag. 123

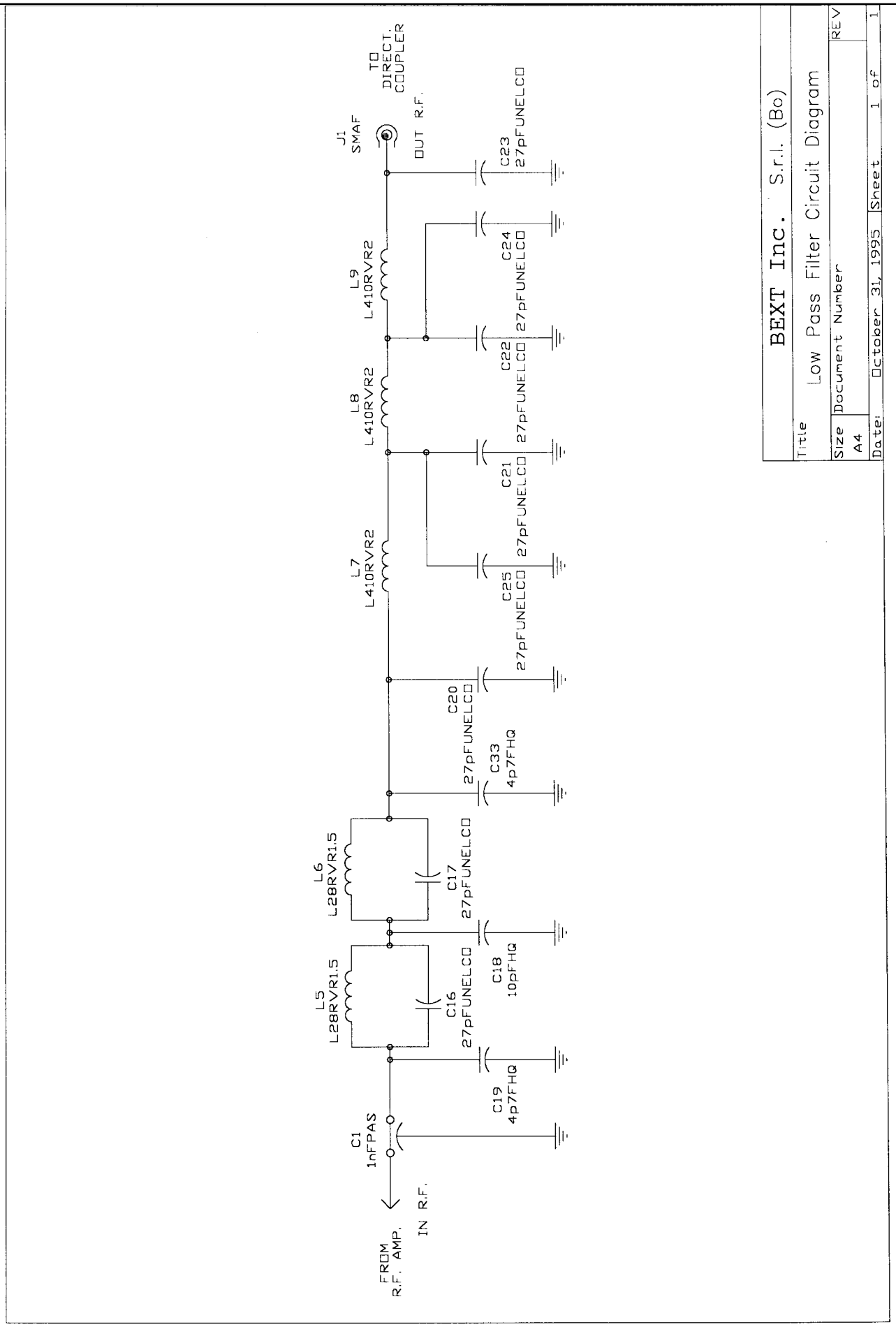
FROM
R.F. AMP.
IN R.F.
C1
1nFPAS
L5
L28RVR1.5
L6
L28RVR1.5
C16
27pFUNELCO
C17
27pFUNELCO
C18
10pFHQ
C19
4p7FHQ
C20
27pFUNELCO
C33
4p7FHQ
L7
L410RVR2
L8
L410RVR2
L9
L410RVR2
C21
27pFUNELCO
C22
27pFUNELCO
C23
27pFUNELCO
C24
27pFUNELCO
C25
27pFUNELCO
J1
SMAF
OUT R.F.
TO
DIRECT.
COUPLER
BEXT Inc. S.r.l. (Bo)
Title
Low Pass Filter Circuit Diagram
Size
A4
Document Number
REV
Date:
October 31, 1995
Sheet
1 of
1

Low Pass Filter Bill Of Materials Page 1

Item	Quantity	Reference	Part	Description	Part Order Code
1	2	C19,C33	4p7FHQ	HIGHT Q CAPACITOR	CHQ4,7AJ500
2	1	C18	10pFHQ	HIGHT Q CAPACITOR	CHQ100AJ500
3	8	C16,C17, C20,C21, C22,C23, C24,C25	27pFUNELCO	SILVER MICA CAPACITOR	CSM270XK351
4	1	C1	1nFPAS	CERAMIC THROUGH CAPAC.	CDP102XK500
5	2	L5,L6	L28RVR1.5	2SP D8 RAME ARG. 1.5mm	BFS15000208
6	3	L7,L8,L9	L410RVR2	4SP D10 RAME ARG. 2.0mm	BFS20000410
7	1	J1	SMAF	CONN. SMA F TELAIO	CNTSMAF

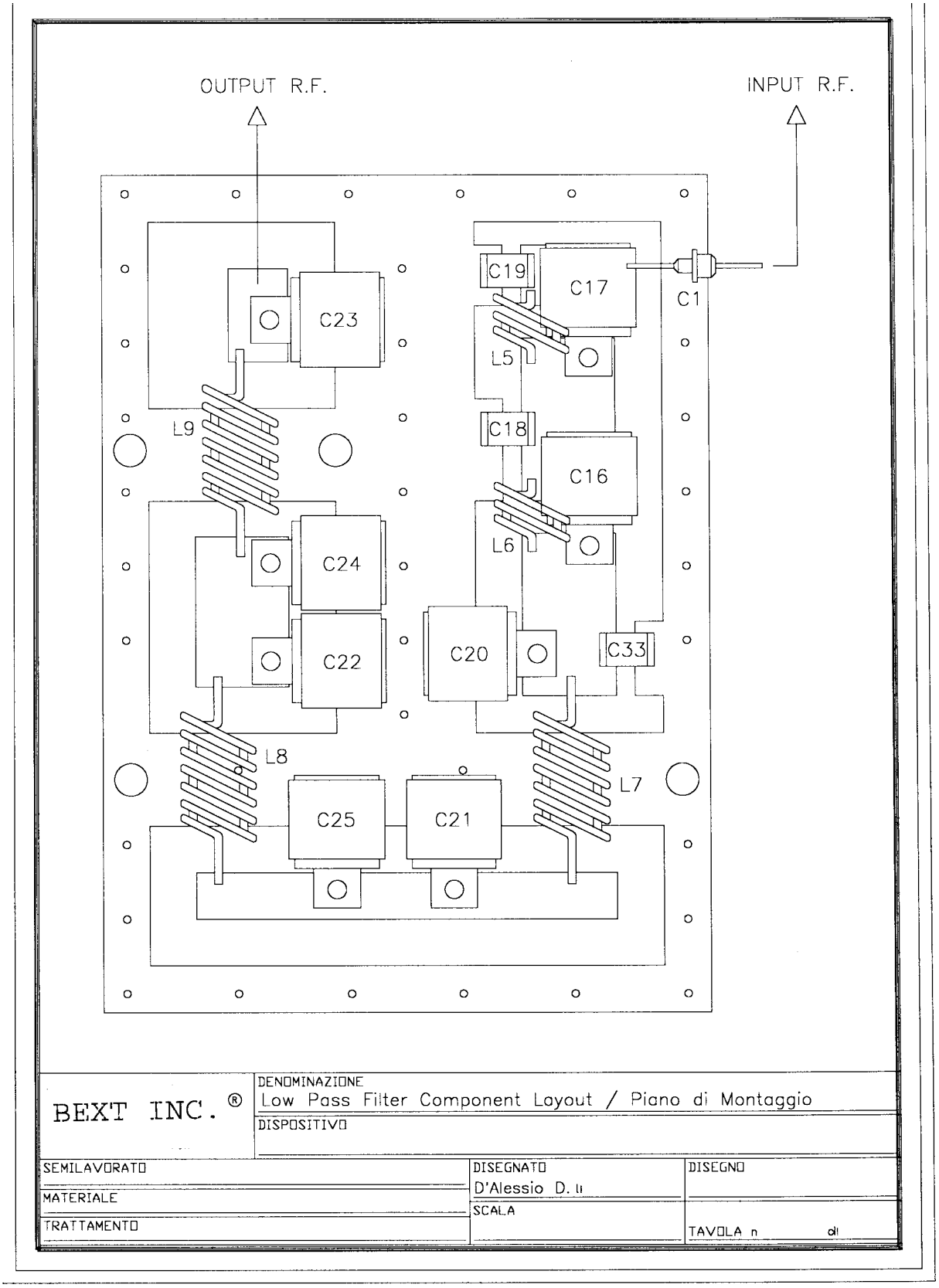
OUTPUT R.F.
INPUT R.F.
C23
C19
C17
C1
L5
L9
C18
C16
L6
C24
C22
C20
C33
L8
L7
C25
C21
BEXT INC. ®
DENOMINAZIONE
Low Pass Filter Component Layout / Piano di Montaggio
DISPOSITIVO
SEMILAVORATO
MATERIALE
TRATTAMENTO
DISEGNATO
D'Alessio D. li
SCALA
DISEGNO
TAVOLA n
di

DIRECTIONAL COUPLER

1	Circuit Diagram	Pag. 125
2	Bill of Materials	Pag. 126
3	Coponent Layout	Pag. 127

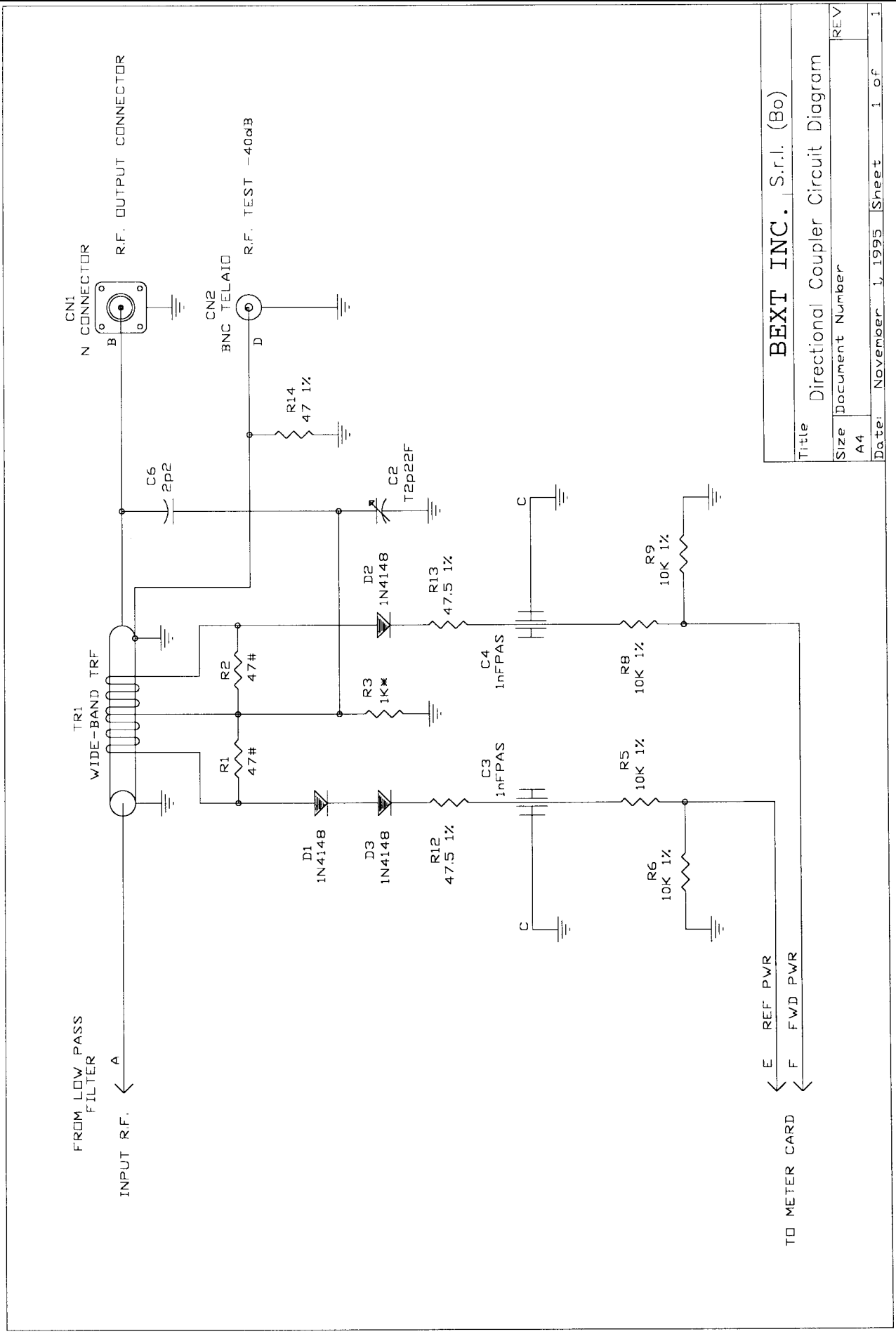
BEXT INC. S.r.l. (Bo)
Title
Directional Coupler Circuit Diagram
REV
Size
A4
Document Number
Date: November 1, 1995
Sheet 1 of 1
CN1
N CONNECTOR
R.F. OUTPUT CONNECTOR
B
CN2
BNC TELAIO
R.F. TEST -40dB
D
R14
47 1%
C6
2p2
C2
T2p22F
D2
1N4148
R13
47.5 1%
C
R9
10K 1%
TR1
WIDE-BAND TRF
R2
47#
R3
1K*
C4
1nFPAS
R8
10K 1%
R1
47#
C3
1nFPAS
R5
10K 1%
D1
1N4148
D3
1N4148
R12
47.5 1%
R6
10K 1%
C
FROM LOW PASS
FILTER
A
INPUT R.F.
E REF PWR
F FWD PWR
TO METER CARD

Directional Coupler Bill Of Materials Page 1

Item	Quantity	Reference	Part	Description	Part Order Code
1	1	R14	47 1%	RESISTOR 1/4W 1%	RSM1/4FH0047
2	2	R1,R2	47#	RESISTOR 2W	RSC002JH0047
3	2	R12,R13	47.5 1%	RESISTOR 1/4W 1%	RSM1/4FH47.5
4	1	R3	1K*	RESISTOR 1/2W 5%	RSC1/2JK0001
5	4	R5,R6,R8,R9	10K 1%	RESISTOR 1/4W 1%	RSM1/4FK0010
6	1	C6	2p2	CERAMIC CAPACITOR NP0	CKM2,2BJ600C
7	1	C2	T2p22F	TRIMMER CAPACITOR	CVC2,22CK600
8	2	C3,C4	1nFPAS	CERAMIC THROUGH CAPAC.	CDP102XK500
9	1	CN2	BNC TELAIO	CONN. BNC A TELAIO	CNTBNCFPV
10	1	CN1	N CONNECTOR	CONN. N A TELAIO	CNTNFPFL
11	3	D1,D2,D3	1N4148	SILICON DIODE	DIS1N4148
12	1	TR1	WIDE-BAND TRF	WIDE-BAND TRANSFORMER	TRFWIDEBAND

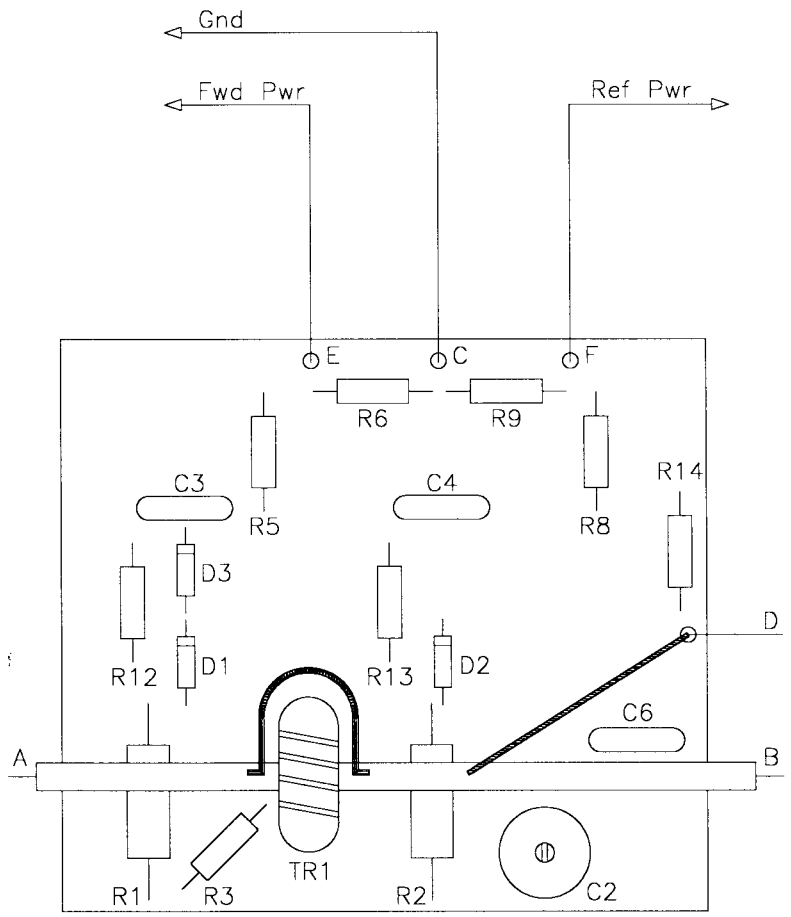

BEXT INC.

DENOMINAZIONE
Directional Coupler Component Layout / Piano di Montaggio

DISPOSITIVO

SEMILAVORATO	DISEGNATO D'Alessio D.	DISEGNO
MATERIALE	SCALA	
TRATTAMENTO		TAVOLA n di

CLIPPER CARD

1	Circuit Diagram	Pag. 129
2	Bill of Materials	Pag. 130
3	Coponent Layout	Pag. 131

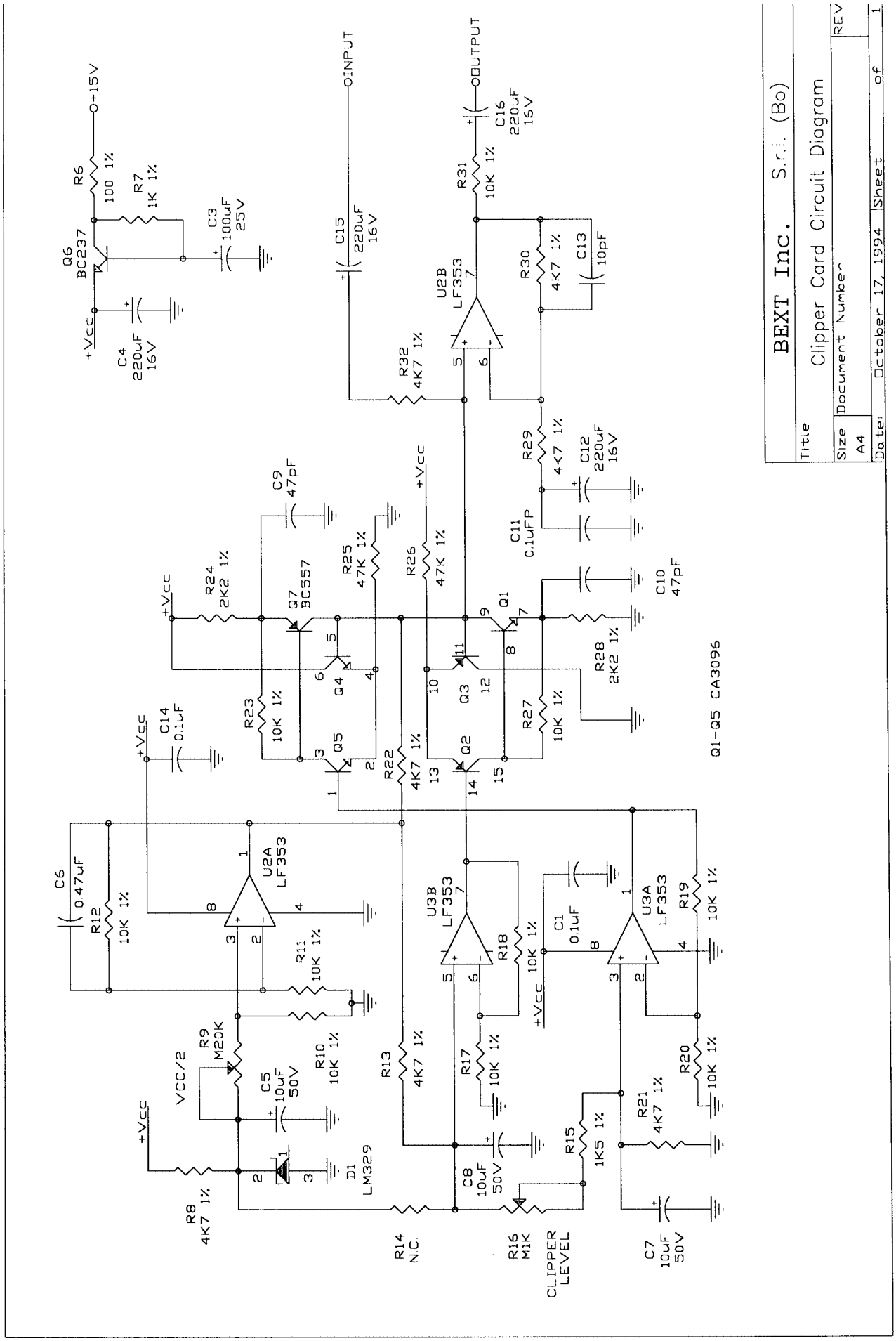
BEXT Inc. S.r.l. (Bo)
Title
Clipper Card Circuit Diagram
Size A4
Document Number
REV
Date: October 17, 1994
Sheet 1 of 1
+15V
R6 100 1%
R7 1K 1%
Q6 BC237
C3 100uF 25V
+Vcc
C4 220uF 16V
INPUT
C15 220uF 16V
OUTPUT
C16 220uF 16V
R31 10K 1%
U2B LF353
R30 4K7 1%
C13 10pF
R32 4K7 1%
R29 4K7 1%
C12 220uF 16V
C11 0.1uFP
C9 47pF
R24 2K2 1%
Q7 BC557
R25 47K 1%
R26 47K 1%
Q1
C10 47pF
R28 2K2 1%
Q4
Q3
R23 10K 1%
Q5
Q2
R27 10K 1%
C14 0.1uF
R22 4K7 1%
Q1-Q5 CA3096
C6 0.47uF
R12 10K 1%
U2A LF353
R11 10K 1%
U3B LF353
R18 10K 1%
C1 0.1uF
U3A LF353
R19 10K 1%
R9 M20K
VCC/2
C5 10uF 50V
R10 10K 1%
R13 4K7 1%
R17 10K 1%
R20 10K 1%
R21 4K7 1%
R15 1K5 1%
D1 LM329
C8 10uF 50V
R8 4K7 1%
R14 N.C.
R16 M1K
CLIPPER LEVEL
C7 10uF 50V

Clipper Card Bill Of Materials Page 2

Item	Quantity	Reference	Part	Description	Part Order Code
1	1	R6	100 1%	RESISTOR 1/4W 1%	RSM1/4FH0100
2	1	R7	1K 1%	RESISTOR 1/4W 1%	RSM1/4FK0001
3	1	R15	1K5 1%	RESISTOR 1/4W 1%	RSC1/4FK01,5
4	2	R24,R28	2K2 1%	RESISTOR 1/4W 1%	RSC1/4FK02,2
5	7	R8,R13,R21, R22,R29, R30,R32	4K7 1%	RESISTOR 1/4W 1%	RSM1/4FK04,7
6	10	R10,R11, R12,R17, R18,R19, R20,R23, R27,R31	10K 1%	RESISTOR 1/4W 1%	RSM1/4FK0010
7	2	R25,R26	47K 1%	RESISTOR 1/4W 1%	RSM1/4FK0047
8	1	R16	M1K	TRIMMER MULTIGIRI	RVTMULAK0001
9	1	R9	M20K	TRIMMER MULTIGIRI	RVTMULAK0020
10	1	C13	10pF	CERAMIC CAPACITOR NP0	CKM100BJ600C
11	2	C9,C10	47pF	CERAMIC CAPACITOR NP0	CKM470BJ600C
12	2	C1,C14	0.1uF	CERAMIC CAPACITOR	CKM104BK600P
13	1	C11	0.1uFP	POLIESTER CAPACITOR	CPE104DK101
14	1	C6	0.47uF	POLIESTER CAPACITOR	CPE474EK101
15	3	C5,C7,C8	10uF	ELECTROLYTIC CAPACITOR	CEA106AM350
16	1	C3	100uF	ELECTROLYTIC CAPACITOR	CEA107BM350
17	4	C4,C12, C15,C16	220uF	ELECTROLYTIC CAPACITOR	CEA227BM350
18	5	Q1,Q2,Q3, Q4,Q5	CA3096	NPN/PNP TRANSIST. ARRAY	CILCA3096
19	1	D1	LM329	VOLT.PRECISION REFER.	CILLM329
20	1	Q6	BC237	NPN TRANSISTOR	TRNBC237
21	1	Q7	BC557	PNP TRANSISTOR	TRNBC557
22	2	U2,U3	LF353	DOUBLE OP. AMP.	CILLF353
23	1	R14	N.C.	NOT CONNECTED	

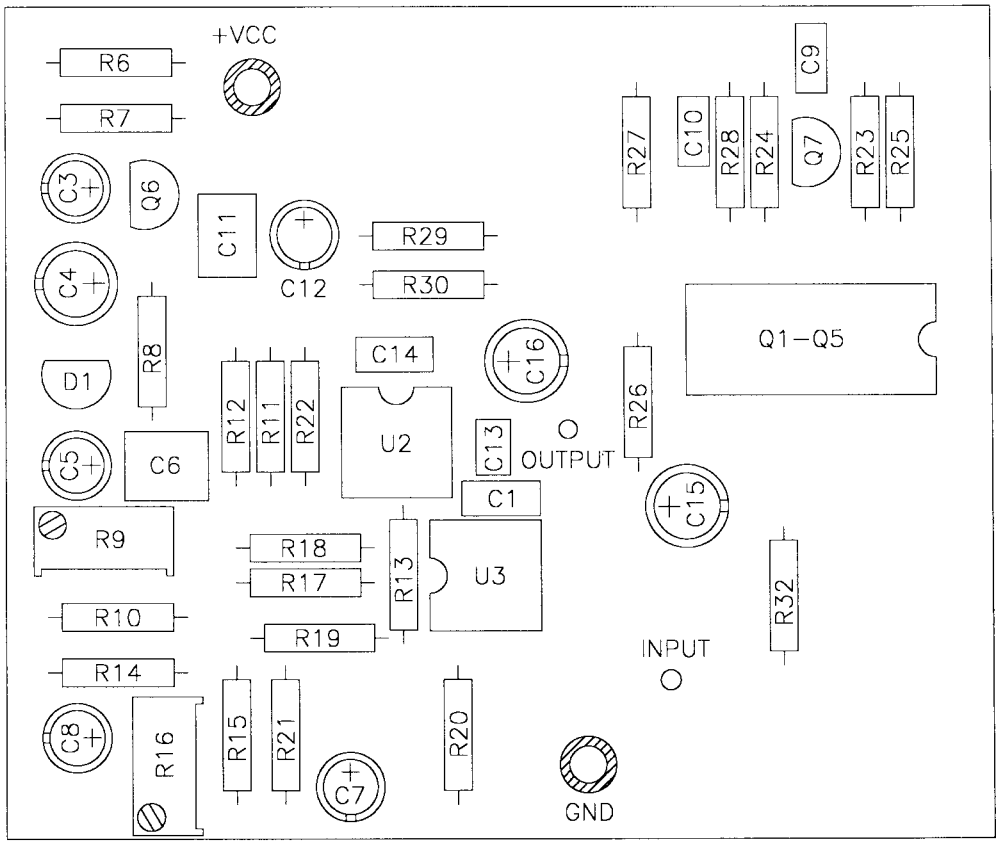

BEXT Inc. ®	DENOMINAZIONE Clipper Card Component Layout / Piano di Montaggio		
	DISPOSITIVO		
SEMILAVORATO		DISEGNATO D'Alessio D. u	DISEGNO
MATERIALE		SCALA	
TRATTAMENTO			TAVOLA n di

150PS2 CARD

1	Circuit Diagram	Pag. 133
2	Bill of Materials	Pag. 134
3	Coponent Layout	Pag. 135

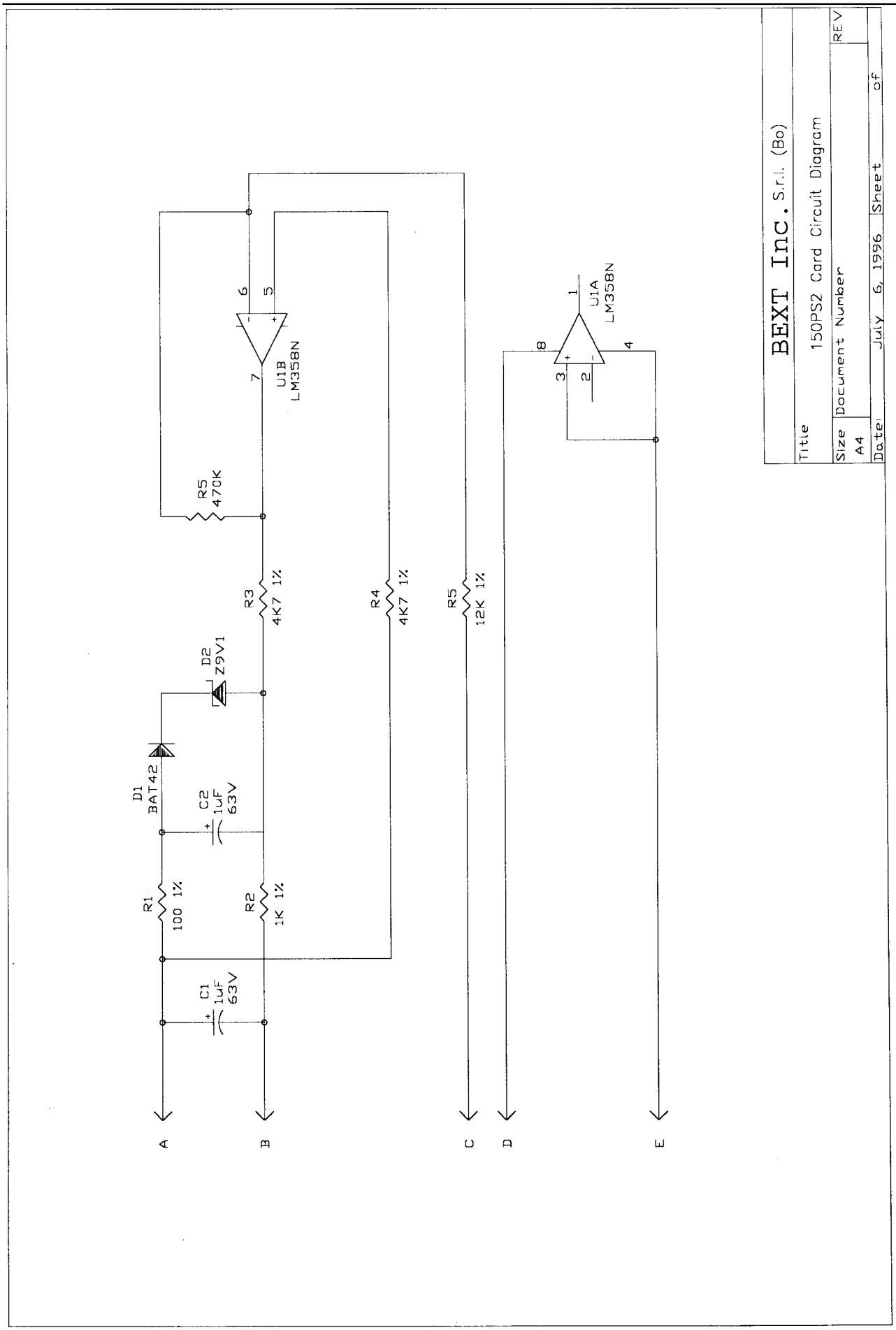
BEXT Inc. S.r.l. (Bo)
Title
150PS2 Card Circuit Diagram
Size
A4
Document Number
REV
Date:
July 6, 1996
Sheet
of
U1B
LM358N
U1A
LM358N
R5
470K
R3
4K7 1%
R4
4K7 1%
R5
12K 1%
D2
Z9V1
D1
BAT42
C2
1uF
63V
R1
100 1%
R2
1K 1%
C1
1uF
63V
A
B
C
D
E

150PS2 Card Bill Of Materials Page 1

Item	Quantity	Reference	Part	Description	Part Order Code
1	1	R1	100 1%	RESISTOR 1/4W 1%	RSM1/4FH0100
2	1	R2	1K 1%	RESISTOR 1/4W 1%	RSM1/4FK0001
3	2	R3,R4	4K7 1%	RESISTOR 1/4W 1%	RSM1/4FK04,7
4	1	R5	12K 1%	RESISTOR 1/4W 1%	RSM1/4FK0012
5	1	R5	470K	RESISTOR 1/4W 5%	RSC1/4JK0470
6	2	C1,C2	1µF	ELECTROLYTIC CAPACITOR	CEA105AM630
7	1	D1	BAT42	HOT CARRIER DIODE	DHCBAT42
8	1	D2	Z9V1	ZENER DIODE 9.1V 0.4W	DIZ9V10W4
9	1	U1	LM358N	DOUBLE OP. AMP.	CILLM358N

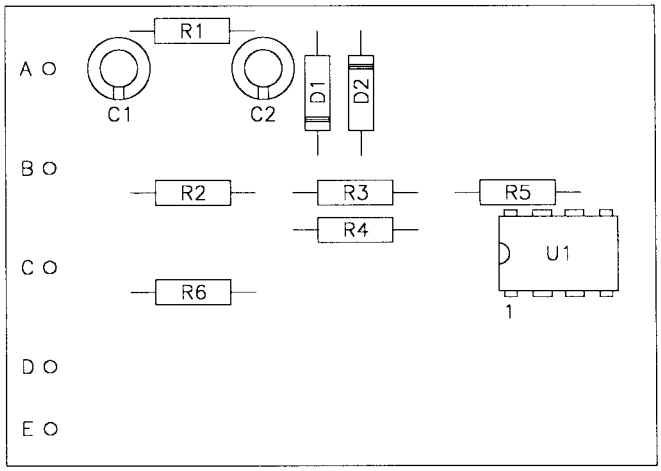

BEXT Inc. ®

DENOMINAZIONE
150PS2 Card Component Layout / Piano di Montaggio

DISPOSITIVO

SEMILAVORATO	DISEGNATO D'Alessio D.	DISEGNO
MATERIALE	SCALA	
TRATTAMENTO		TAVOLA n di

STEREO CODER CARD (Mod. SDC30A002)

1	Circuit Diagram	Pag. 137
2	Bill of Materials	Pag. 140
3	Coponent Layout	Pag. 150

TEX150 and TEX150/S Technical and Maintenance Manual

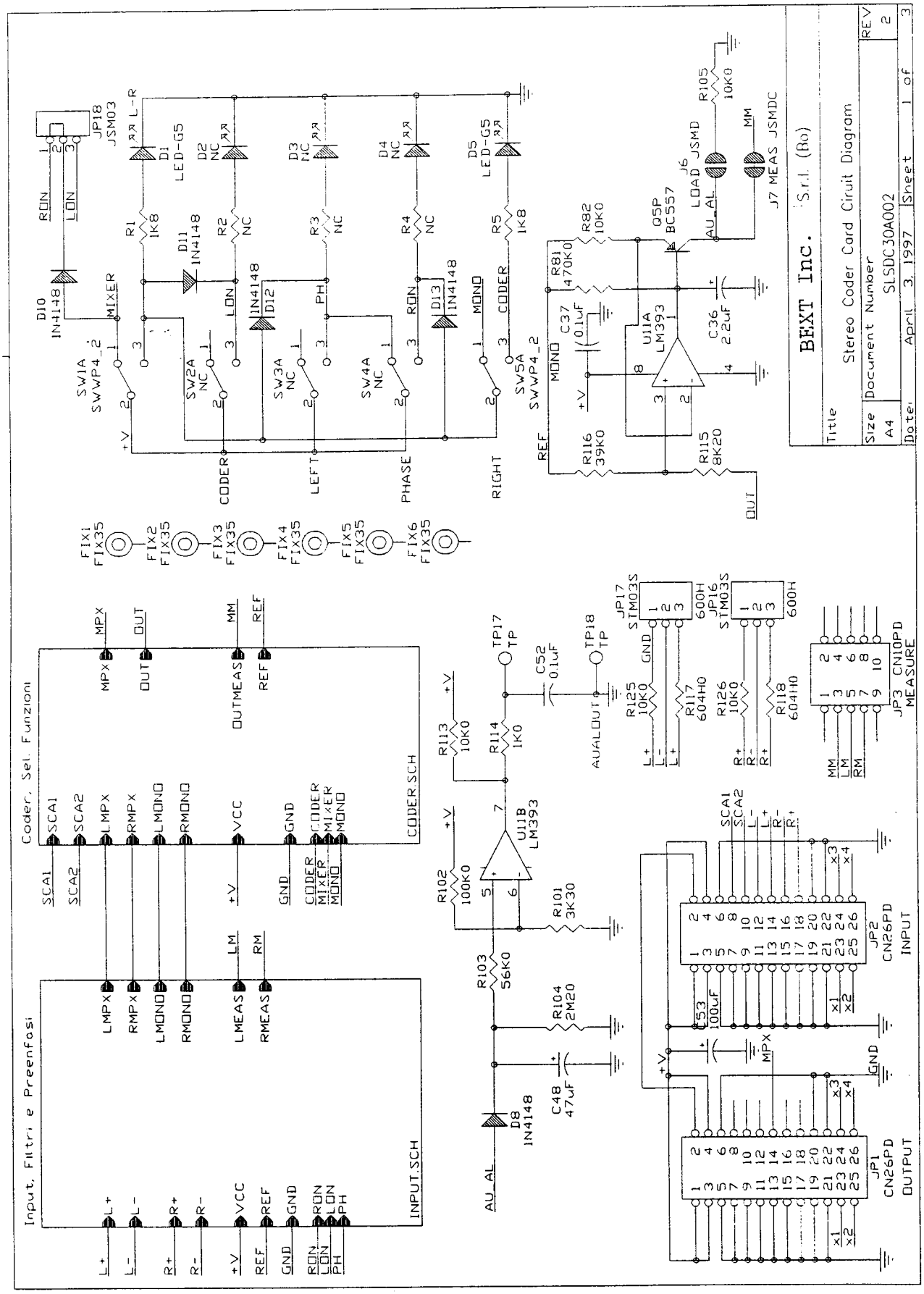

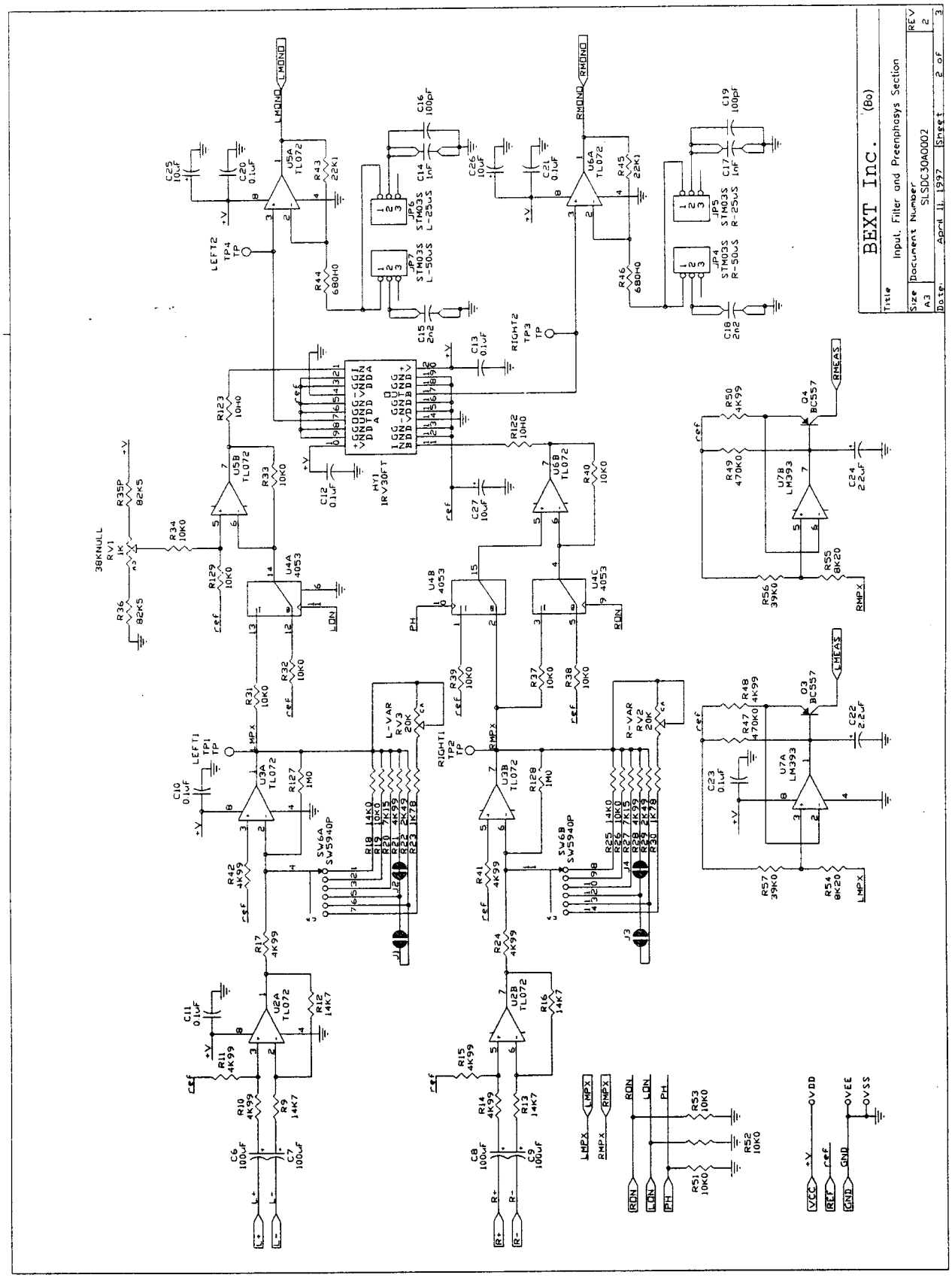
BEXT Inc. (Bo)
Title Input, Filter and Preemphasys Section
Size A3
Document Number SLSDC30A0002
REV 2
Date: April 11, 1997
Sheet 2 of 3
LMONO
RMONO
LEFT2 TP4 TP
RIGHT2 TP3 TP
LEFT1 TP1 TP
RIGHT1 TP2 TP
HY1 IRV30FT
38KNULL RV1 1K
L-VAR RV3 20K
R-VAR RV2 20K
SW6A SW5940P
SW6B SW5940P
JP6 STM03S L-25uS
JP7 STM03S L-50uS
JP5 STM03S R-25uS
JP4 STM03S R-50uS
LMEAS
RMEAS
LON
RON
PH
LMPX
RMPX
VCC
REF
GND
VDD
VEE
VSS

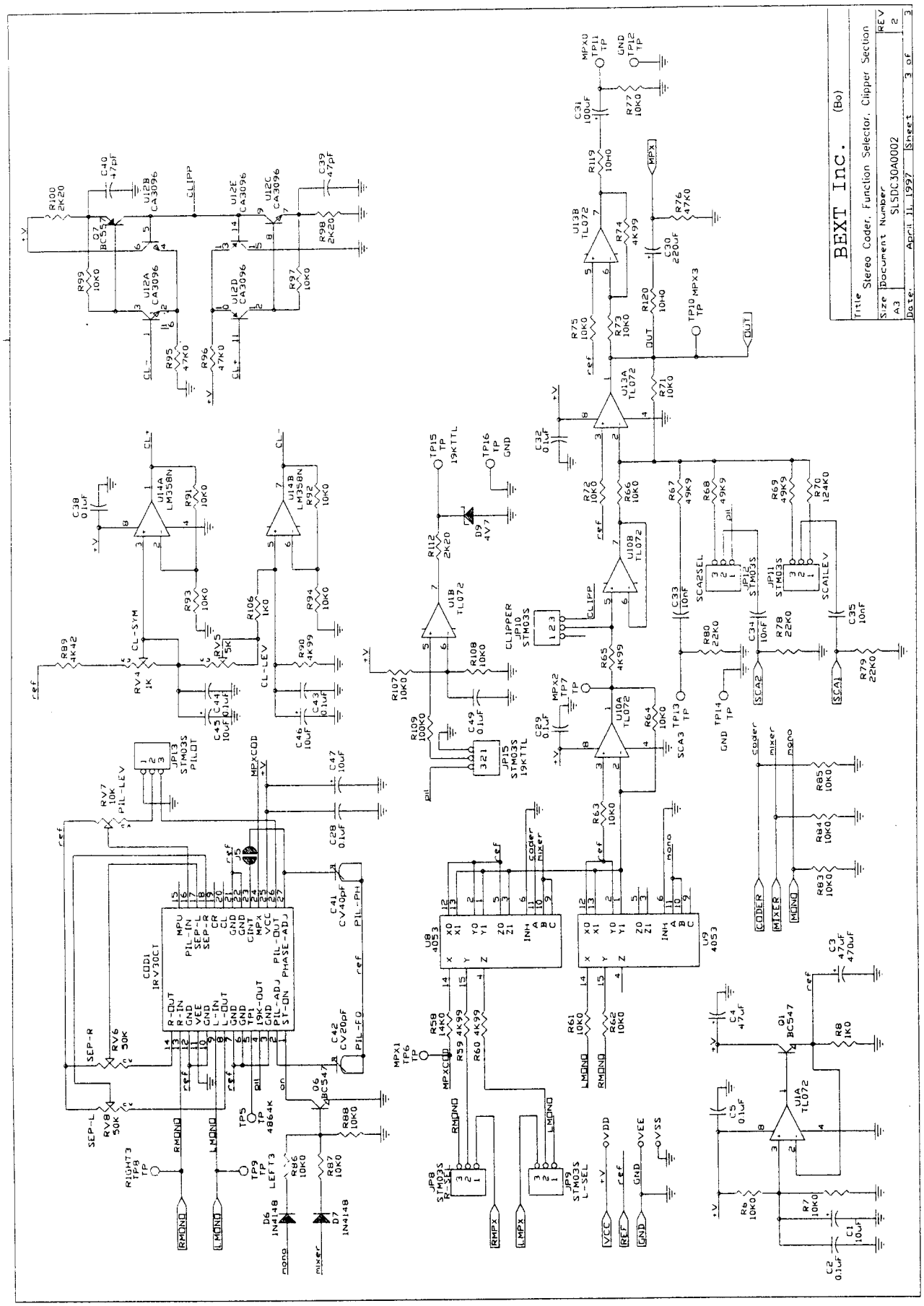
BEXT Inc. (Bo)
Title Stereo Coder, Function Selector, Clipper Section
Size A3
Document Number SLSDC30A0002
REV 2
Date April 11, 1997
Sheet 3 of 3

Stereo Coder Bill Of Materials Page 1

Item	Reference	Part	Description	Part Order Code
1	CS1	CS	PC Board	CSSDC30A0002
2	R1	1K8	Res. 1/4 W 1%	RSM1/4FK01,8
3	R5	1K8	Res. 1/4 W 1%	RSM1/4FK01,8
4	R117	604H0	Res. 1/4 W 1%	RSM1/4FH0604
5	R118	604H0	Res. 1/4 W 1%	RSM1/4FH0604
6	D1	LED-G5	Led Green dia. 5mm	LEDVE05
7	D5	LED-G5	Led Green dia. 5mm	LEDVE05
8	D8	1N4148	Silicon Diode	DIS1N4148
9	C48	47uF	Electrolitic Cap.16V p. 2.5mm	CEA476AM160
10	R104	2M20	Res. 1/4 W 1%	RSM1/4FM02,2
11	R103	56K0	Res. 1/4 W 1%	RSM1/4FK0056
12	R114	1K0	Res. 1/4 W 1%	RSM1/4FK0001
13	R125	10K0	Res. 1/4 W 1%	RSM1/4FK0010
14	R126	10K0	Res. 1/4 W 1%	RSM1/4FK0010
15	JP17	STM03S	Strip M 2.54 3 pin.	CNTSTM03S
16	JP16	STM03S	Strip M 2.54 3 pin.	CNTSTM03S
17	JP2	CN26PD	Conn. M cs 2x2.54mm 26 pin.	CNTMCSFC26P
18	JP3	CN10PD	Conn. M cs 2x2.54mm 10 pin.	CNTMCSFC10P
19	JP1	CN26PD	Conn. M cs 2x2.54mm 26 pin.	CNTMCSFC26P
20	C52	0.1uF	Ceramic Capacitor p. 5mm P100	CKM104BK600P
21	SW1	SWWP4_2	Rotary Switch	SWWP4_2
22	SW5	SWWP4_2	Rotary Switch	SWWP4_2
23	C53	100uF	Electrolitic Cap 25V p. 2.5mm	CEA107AM250
24	SW2	NC	Not connected	
25	R2	NC	Not connected	
26	D2	NC	Not connected	
27	D3	NC	Not connected	

Stereo Coder Bill Of Materials Page 2

Item	Reference	Part	Description	Part Order Code
28	R3	NC	Not connected	
29	SW3	NC	Not connected	
30	SW4	NC	Not connected	
31	R4	NC	Not connected	
32	D4	NC	Not connected	
33	D10	1N4148	Silicon Diode	DIS1N4148
34	D11	1N4148	Silicon Diode	DIS1N4148
35	D12	1N4148	Silicon Diode	DIS1N4148
36	D13	1N4148	Silicon Diode	DIS1N4148
37	C37	0.1uF	Ceramic Cap. p. 5mm P100	CKM104BK600P
38	R81	470K0	Res. 1/4 W 1%	RSM1/4FK0470
39	R82	10K0	Res. 1/4 W 1%	RSM1/4FK0010
40	R116	39K0	Res. 1/4 W 1%	RSM1/4FK0039
41	R115	8K20	Res. 1/4 W 1%	RSM1/4FK08,2
42	R105	10K0	Res. 1/4 W 1%	RSM1/4FK0010
43	U11	LM393	IC linear	CILLM393
44	ZOC11	ZOC8	Socket 8 pin	ZIN08
45	R102	100K0	Res. 1/4 W 1%	RSM1/4FK0100
46	R101	3K30	Res. 1/4 W 1%	RSM1/4FK03,3
47	C36	2.2uF	Electrolitic Cap.16V p. 2.5mm	CEA225AM160
48	R113	10K0	Res. 1/4 W 1%	RSM1/4FK0010
49	Q5P	BC557	Tr. in TO 92	TRNBC557
50	U2	TL072	IC linear	CILTL072
51	ZOC2	ZOC8	Socket 8 pin	ZIN08
52	U5	TL072	IC linear	CILTL072
53	ZOC5	ZOC8	Socket 8 pin	ZIN08
54	U6	TL072	IC linear	CILTL072
55	ZOC6	ZOC8	Socket 8 pin	ZIN08

Stereo Coder Bill Of Materials Page 3

Item	Reference	Part	Description	Part Order Code
56	U3	TL072	IC linear	CILTL072
57	ZOC3	ZOC8	Socket 8 pin	ZIN08
58	U7	LM393	IC lineare	CILLM393
59	ZOC7	ZOC8	Socket 8 pin	ZIN08
60	C6	100uF	Electrolitic Cap.25V p. 2.5mm	CEA107AM250
61	C7	100uF	Electrolitic Cap.25V p. 2.5mm	CEA107AM250
62	R9	14K7	Res. 1/4 W 1%	RSM1/4FK14,7
63	R10	4K99	Res. 1/4 W 1%	RSM1/4FK4,99
64	R11	4K99	Res. 1/4 W 1%	RSM1/4FK4,99
65	R12	14K7	Res. 1/4 W 1%	RSM1/4FK14,7
66	C11	0.1uF	Ceramic Cap. p. 5mm P100	CKM104BK600P
67	C10	0.1uF	Ceramic Cap. p. 5mm P100	CKM104BK600P
68	R31	10K0	Res. 1/4 W 1%	RSM1/4FK0010
69	R33	10K0	Res. 1/4 W 1%	RSM1/4FK0010
70	C27	10uF	Electrolitic Cap.35V p. 2.5mm	CEA106AM350
71	C13	0.1uF	Ceramic Cap. p. 5mm P100	CKM104BK600P
72	R44	680H0	Res. 1/4 W 1%	RSM1/4FH0680
73	R43	22K1	Res. 1/4 W 1%	RSM1/4FK22,1
74	C14	1nF	Capacitor 1% p. 7mm	CPS102CF630
75	C16	100pF	Ceramic Cap. p. 5mm NP0	CKM101BK600C
76	C20	0.1uF	Ceramic Cap. p. 5mm P100	CKM104BK600P
77	C25	10uF	Electrolitic Cap.35V p. 2.5mm	CEA106AM350
78	C26	10uF	Electrolitic Cap.35V p. 2.5mm	CEA106AM350
79	C21	0.1uF	Ceramic Cap. p. 5mm P100	CKM104BK600P
80	R45	22K1	Res. 1/4 W 1%	RSM1/4FK22,1
81	R46	680H0	Res. 1/4 W 1%	RSM1/4FH0680
82	C18	2.2nF	Capacitor 1% p. 7mm	CPS222CF630
83	C15	2.2nF	Capacitor 1% p. 7mm	CPS222CF630

Stereo Coder Bill Of Materials Page 4

Item	Reference	Part	Description	Part Order Code
84	C17	1nF	Capacitor 1% p. 7mm	CPS102CF630
85	C19	100pF	Ceramic Cap. p. 5mm NP0	CKM101BK600C
86	R40	10K0	Res. 1/4 W 1%	RSM1/4FK0010
87	R37	10K0	Res. 1/4 W 1%	RSM1/4FK0010
88	R39	10K0	Res. 1/4 W 1%	RSM1/4FK0010
89	R14	4K99	Res. 1/4 W 1%	RSM1/4FK4,99
90	R15	4K99	Res. 1/4 W 1%	RSM1/4FK4,99
91	R13	14K7	Res. 1/4 W 1%	RSM1/4FK14,7
92	R16	14K7	Res. 1/4 W 1%	RSM1/4FK14,7
93	C9	100uF	Electrolitic Cap.25V p. 2.5mm	CEA107AM250
94	C8	100uF	Electrolitic Cap.25V p. 2.5mm	CEA107AM250
95	R51	10K0	Res. 1/4 W 1%	RSM1/4FK0010
96	R52	10K0	Res. 1/4 W 1%	RSM1/4FK0010
97	R53	10K0	Res. 1/4 W 1%	RSM1/4FK0010
98	R57	39K0	Res. 1/4 W 1%	RSM1/4FK0039
99	R54	8K20	Res. 1/4 W 1%	RSM1/4FK08,2
100	C22	2.2uF	Electrolitic Cap.16V p. 2.5mm	CEA225AM160
101	R47	470K0	Res. 1/4 W 1%	RSM1/4FK0470
102	C23	0.1uF	Ceramic Cap. p. 5mm P100	CKM104BK600P
103	Q3	BC557	Tr. in TO 92	TRNBC557
104	R55	8K20	Res. 1/4 W 1%	RSM1/4FK08,2
105	R56	39K0	Res. 1/4 W 1%	RSM1/4FK0039
106	R49	470K0	Res. 1/4 W 1%	RSM1/4FK0470
107	Q4	BC557	Tr. in TO 92	TRNBC557
108	C24	2.2uF	Electrolitic Cap.16V p. 2.5mm	CEA225AM160
109	R19	10K0	Res. 1/4 W 1%	RSM1/4FK0010
110	R20	7K15	Res. 1/4 W 1%	RSM1/4FK7,15
111	R22	2K49	Res. 1/4 W 1%	RSM1/4FK2,49

Stereo Coder Bill Of Materials Page 5

Item	Reference	Part	Description	Part Order Code
112	R23	1K78	Res. 1/4 W 1%	RSM1/4FK1,78
113	R26	10K0	Res. 1/4 W 1%	RSM1/4FK0010
114	R27	7K15	Res. 1/4 W 1%	RSM1/4FK7,15
115	R29	2K49	Res. 1/4 W 1%	RSM1/4FK2,49
116	R30	1K78	Res. 1/4 W 1%	RSM1/4FK1,78
117	C12	0.1uF	Ceramic Cap. p. 5mm P100	CKM104BK600P
118	RV1	1K	Multi Turn Pot. 3296W rg V	RVTMTJVK0001
119	JP4	STM03S	Strip M 2.54 3 pin.	CNTSTM03S
120	JP5	STM03S	Strip M 2.54 3 pin.	CNTSTM03S
121	JP7	STM03S	Strip M 2.54 3 pin.	CNTSTM03S
122	R127	1M0	Res. 1/4 W 1%	RSM1/4FM0001
123	R128	1M0	Res. 1/4 W 1%	RSM1/4FM0001
124	SW6	SW5940P	Rotary Switch	SW5940P
125	U4	4053	IC digital	CID4053
126	ZOC4	ZOC16	Socket 16 pin	ZIN16
127	R38	10K0	Res. 1/4 W 1%	RSM1/4FK0010
128	R32	10K0	Res. 1/4 W 1%	RSM1/4FK0010
129	R17	4K99	Res. 1/4 W 1%	RSM1/4FK4,99
130	R24	4K99	Res. 1/4 W 1%	RSM1/4FK4,99
131	R41	4K99	Res. 1/4 W 1%	RSM1/4FK4,99
132	R42	4K99	Res. 1/4 W 1%	RSM1/4FK4,99
133	R21	4K99	Res. 1/4 W 1%	RSM1/4FK4,99
134	R18	14K0	Res. 1/4 W 1%	RSM1/4FK0014
135	R25	14K0	Res. 1/4 W 1%	RSM1/4FK0014
136	R28	4K99	Res. 1/4 W 1%	RSM1/4FK4,99
137	R48	4K99	Res. 1/4 W 1%	RSM1/4FK4,99
138	R50	4K99	Res. 1/4 W 1%	RSM1/4FK4,99
139	R123	10H0	Res. 1/4 W 1%	RSM1/4FH0010

Stereo Coder Bill Of Materials Page 6

Item	Reference	Part	Description	Part Order Code
140	R122	10H0	Res. 1/4 W 1%	RSM1/4FH0010
141	JP6	STM03S	Strip M 2.54 3 pin.	CNTSTM03S
142	RV2	20K	Multi Turn Pot. rg H	RVTMTDHK0020
143	RV3	20K	Multi Turn Pot. rg H	RVTMTDHK0020
144	R34	10K0	Res. 1/4 W 1%	RSM1/4FK0010
145	R129	10K0	Res. 1/4 W 1%	RSM1/4FK0010
146	R36	82K5	Res. 1/4 W 1%	RSM1/4FK82,5
147	R35P	82K5	Res. 1/4 W 1%	RSM1/4FK82,5
148	HY1	IRV30FT	Code Filter IRV30FT	MIBIRV30FT
149	U8	4053	IC digital	CID4053
150	ZOC8	ZOC16	Socket 16 pin	ZIN16
151	U9	4053	IC digital	CID4053
152	ZOC9	ZOC16	Socket 16 pin	ZIN16
153	C30	220uF	Electrolitic Cap.16V p. 2.5mm	CEA227AM160
154	U12	CA3096	IC linear	CILCA3096
155	ZOC12	ZOC16	Socket 16 pin	ZIN16
156	U10	TL072	IC linear	CILTL072
157	ZOC10	ZOC8	Socket 8 pin	ZIN08
158	U13	TL072	IC linear	CILTL072
159	ZOC13	ZOC8	Socket 8 pin	ZIN08
160	U14	LM358N	IC linear	CILLM358N
161	ZOC14	ZOC8	Socket 8 pin	ZIN08
162	C47	10uF	Electrolitic Cap.35V p. 2.5mm	CEA106AM350
163	C28	0.1uF	Ceramic Cap. p. 5mm P100	CKM104BK600P
164	Q6	BC547	Tr. in TO 92	TRNBC547
165	R88	10K0	Res. 1/4 W 1%	RSM1/4FK0010
166	R87	10K0	Res. 1/4 W 1%	RSM1/4FK0010
167	R86	10K0	Res. 1/4 W 1%	RSM1/4FK0010

Stereo Coder Bill Of Materials Page 7

Item	Reference	Part	Description	Part Order Code
168	D6	1N4148	Silicon Diode	DIS1N4148
169	D7	1N4148	Silicon Diode	DIS1N4148
170	R59	4K99	Res. 1/4 W 1%	RSM1/4FK4,99
171	R60	4K99	Res. 1/4 W 1%	RSM1/4FK4,99
172	R61	10K0	Res. 1/4 W 1%	RSM1/4FK0010
173	R62	10K0	Res. 1/4 W 1%	RSM1/4FK0010
174	R63	10K0	Res. 1/4 W 1%	RSM1/4FK0010
175	R64	10K0	Res. 1/4 W 1%	RSM1/4FK0010
176	C29	0.1uF	Ceramic Cap. p. 5mm P100	CKM104BK600P
177	R65	4K99	Res. 1/4 W 1%	RSM1/4FK4,99
178	R72	10K0	Res. 1/4 W 1%	RSM1/4FK0010
179	R66	10K0	Res. 1/4 W 1%	RSM1/4FK0010
180	C32	0.1uF	Ceramic Cap. p. 5mm P100	CKM104BK600P
181	R71	10K0	Res. 1/4 W 1%	RSM1/4FK0010
182	R73	10K0	Res. 1/4 W 1%	RSM1/4FK0010
183	R75	10K0	Res. 1/4 W 1%	RSM1/4FK0010
184	R74	4K99	Res. 1/4 W 1%	RSM1/4FK4,99
185	R119	10H0	Res. 1/4 W 1%	RSM1/4FH0010
186	C31	100uF	Electrolitic Cap.25V p. 2.5mm	CEA107AM250
187	R77	10K0	Res. 1/4 W 1%	RSM1/4FK0010
188	R120	10H0	Res. 1/4 W 1%	RSM1/4FH0010
189	R79	22K0	Res. 1/4 W 1%	RSM1/4FK0022
190	R78	22K0	Res. 1/4 W 1%	RSM1/4FK0022
191	R80	22K0	Res. 1/4 W 1%	RSM1/4FK0022
192	R67	49K9	Res. 1/4 W 1%	RSM1/4FK49,9
193	R68	49K9	Res. 1/4 W 1%	RSM1/4FK49,9
194	R69	49K9	Res. 1/4 W 1%	RSM1/4FK49,9
195	R70	124K0	Res. 1/4 W 1%	RSM1/4FK0124

Stereo Coder Bill Of Materials Page 8

Item	Reference	Part	Description	Part Order Code
196	R83	10K0	Res. 1/4 W 1%	RSM1/4FK0010
197	R84	10K0	Res. 1/4 W 1%	RSM1/4FK0010
198	R85	10K0	Res. 1/4 W 1%	RSM1/4FK0010
199	C39	47pF	Ceramic Cap. p. 5mm NP0	CKM470BK600C
200	R98	2K20	Res. 1/4 W 1%	RSM1/4FK02,2
201	R97	10K0	Res. 1/4 W 1%	RSM1/4FK0010
202	R96	47K0	Res. 1/4 W 1%	RSM1/4FK0047
203	R95	47K0	Res. 1/4 W 1%	RSM1/4FK0047
204	Q7	BC557	Tr. in TO 92	TRNBC557
205	C40	47pF	Ceramic Cap. p. 5mm NP0	CKM470BK600C
206	R100	2K20	Res. 1/4 W 1%	RSM1/4FK02,2
207	C38	0.1uF	Ceramic Cap. p. 5mm P100	CKM104BK600P
208	R91	10K0	Res. 1/4 W 1%	RSM1/4FK0010
209	R93	10K0	Res. 1/4 W 1%	RSM1/4FK0010
210	R92	10K0	Res. 1/4 W 1%	RSM1/4FK0010
211	R94	10K0	Res. 1/4 W 1%	RSM1/4FK0010
212	R90	4K99	Res. 1/4 W 1%	RSM1/4FK4,99
213	C43	0.1uF	Ceramic Cap. p. 5mm P100	CKM104BK600P
214	C46	10uF	Electrolitic Cap.35V p. 2.5mm	CEA106AM350
215	C45	10uF	Elecrtolitic Cap.35V p. 2.5mm	CEA106AM350
216	C44	0.1uF	Ceramic Cap. p. 5mm P100	CKM104BK600P
217	R106	1K0	Res. 1/4 W 1%	RSM1/4FK0001
218	R89	4K42	Res. 1/4 W 1%	RSM1/4FK4,42
219	R109	100K0	Res. 1/4 W 1%	RSM1/4FK0100
220	C49	0.1uF	Ceramic Cap. p. 5mm P100	CKM104BK600P
221	R108	10K0	Res. 1/4 W 1%	RSM1/4FK0010
222	D9	4V7	Zener Diode 0.4 W	DIZ4V70W4
223	R76	47K0	Res. 1/4 W 1%	RSM1/4FK0047

Stereo Coder Bill Of Materials Page 9

Item	Reference	Part	Description	Part Order Code
224	JP13	STM03S	Strip M 2.54 3 pin.	CNTSTM03S
225	JP15	STM03S	Strip M 2.54 3 pin.	CNTSTM03S
226	JP10	STM03S	Strip M 2.54 3 pin.	CNTSTM03S
227	JP12	STM03S	Strip M 2.54 3 pin.	CNTSTM03S
228	JP11	STM03S	Strip M 2.54 3 pin.	CNTSTM03S
229	R99	10K0	Res. 1/4 W 1%	RSM1/4FK0010
230	R107	10K0	Res. 1/4 W 1%	RSM1/4FK0010
231	R112	2K20	Res. 1/4 W 1%	RSM1/4FK02,2
232	R6	10K0	Res. 1/4 W 1%	RSM1/4FK0010
233	R7	10K0	Res. 1/4 W 1%	RSM1/4FK0010
234	C1	10uF	Electrolitic Cap.35V p. 2.5mm	CEA106AM350
235	C2	0.1uF	Ceramic Cap. p. 5mm P100	CKM104BK600P
236	C5	0.1uF	Ceramic Cap. p. 5mm P100	CKM104BK600P
237	C4	47uF	Electrolitic Cap.16V p. 2.5mm	CEA476AM160
238	C3	47uF	Electrolitic Cap.16V p. 2.5mm	CEA476AM160
239	U1	TL072	IC linear	CILTL072
240	ZOC1	ZOC8	Socket 8 pin	ZIN08
241	C33	10nF	Ceramic Cap. p. 5mm P100	CKM103BK600P
242	C34	10nF	Ceramic Cap. p. 5mm P100	CKM103BK600P
243	C35	10nF	Ceramic Cap. p. 5mm P100	CKM103BK600P
244	JP9	STM03S	Strip M 2.54 3 pin.	CNTSTM03S
245	JP8	STM03S	Strip M 2.54 3 pin.	CNTSTM03S
246	RV8	50K	Multi Turn Pot. 3296W rg V	RVTMTJVK0050
247	RV6	50K	Multi Turn Pot. 3296W rg V	RVTMTJVK0050
248	RV7	10K	Multi Turn Pot. 3296W rg V	RVTMTJVK0010
249	C41	40pF	Ceramic Cap. var. dia. 7mm	CVC400BK600
250	C42	20pF	Ceramic Cap. var. dia. 7mm	CVC200BK600

Stereo Coder Bill Of Materials Page 10

Item	Reference	Part	Description	Part Order Code
251	RV4	1K	Multi Turn Pot.3296W rg V	RVTMTJVK0001
252	RV5	5K	Multi Turn Pot.3296W rg V	RVTMTJVK0005
253	Q1	BC547	Tr. in TO 92	TRNBC547
254	R8	1K0	Res. 1/4 W 1%	RSM1/4FK0001
255	R58	14K0	Res. 1/4 W 1%	RSM1/4FK0014
256	COD1	IRV30CT	Stereo Coder IRV30CT	MIBIRV30CT

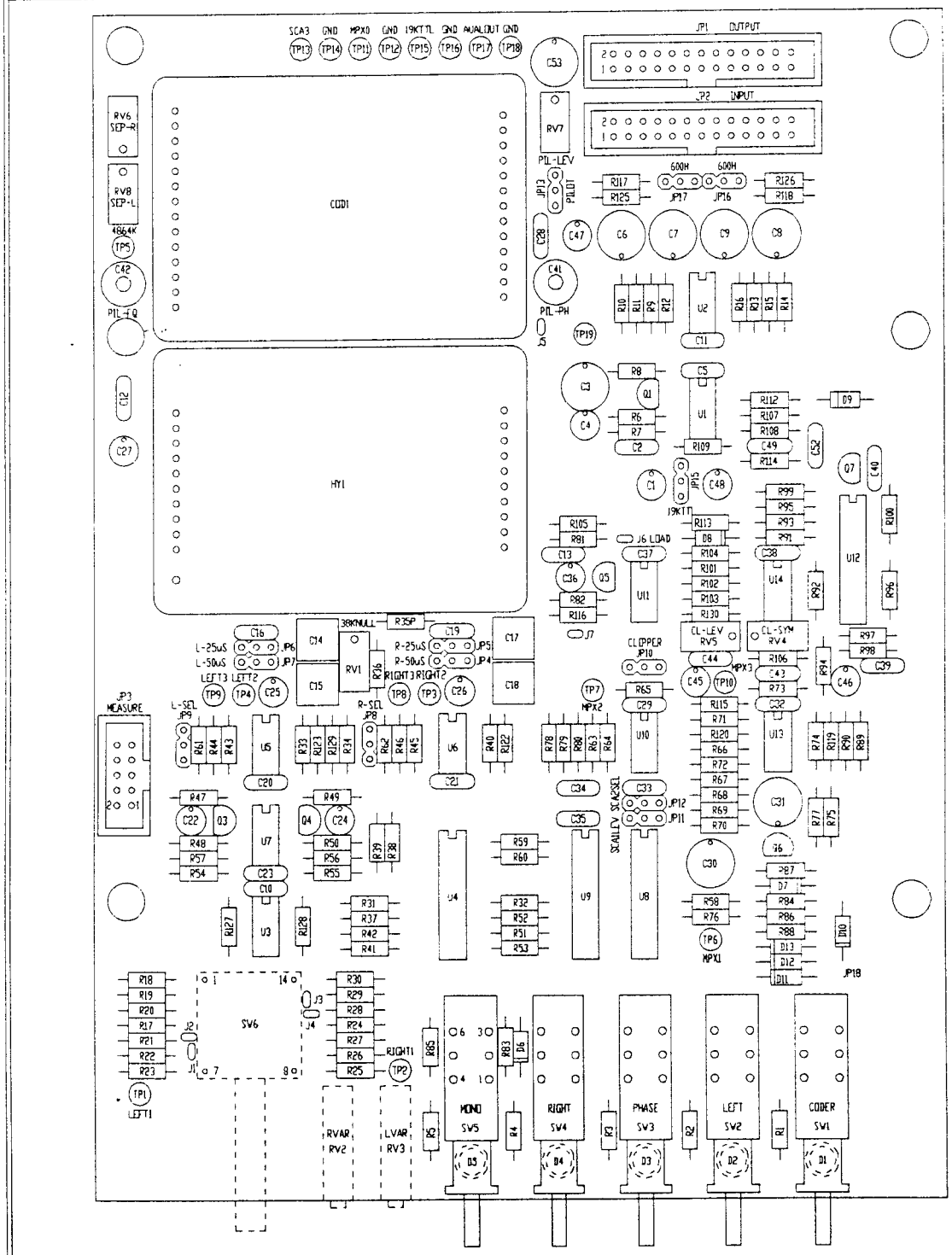

BEXT Inc.®

DENOMINAZIONE
Component Layout / Piano di Montaggio

DISPOSITIVO
SDC30A002 (Stereo Coder Card)

SEMILAVORATO	DISEGNATO D'Alessio D. il 02/05/97	DISEGNO
MATERIALE	SCALA	
TRATTAMENTO		TAVOLA n di

TCXO CARD

1	Circuit Diagram	Pag. 152
2	Bill of Materials	Pag. 153
3	Coponent Layout	Pag. 154

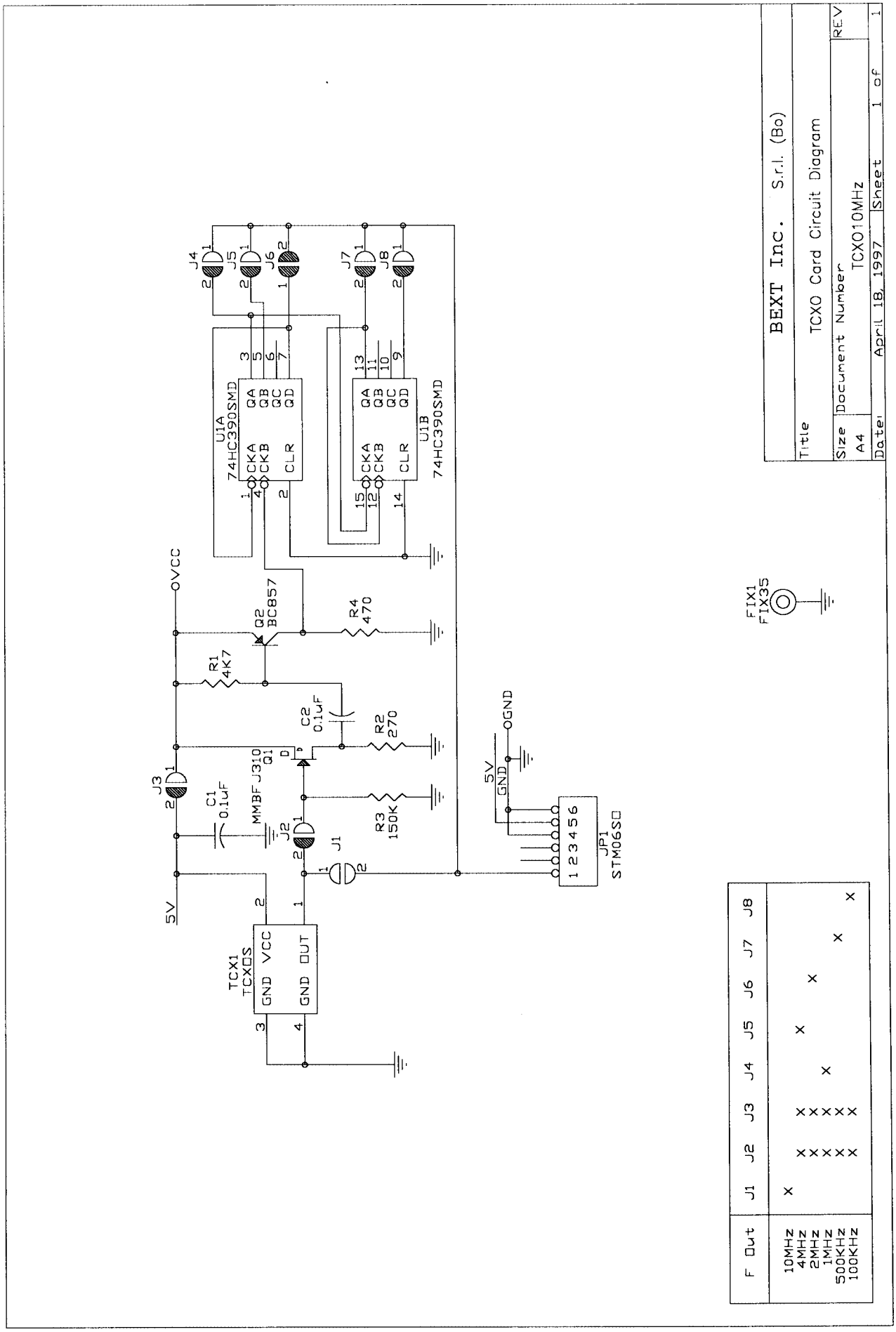
BEXT Inc. S.r.l. (Bo)
Title
TCXO Card Circuit Diagram
Size
A4
Document Number
TCXO10MHz
REV
Date: April 18, 1997
Sheet 1 of 1
U1A
74HC390SMD
U1B
74HC390SMD
CKA
CKB
CLR
QA
QB
QC
QD
J1
J2
J3
J4
J5
J6
J7
J8
Q1
MMBFJ310
Q2
BC857
R1
4K7
R2
270
R3
150K
R4
470
C1
0.1uF
C2
0.1uF
VCC
5V
GND
TCX1
TCXOS
GND
VCC
OUT
JP1
STM06SO
FIX1
FIX35
F Out
10MHz
4MHz
2MHz
1MHz
500KHz
100KHz

TCXO Card Bill Of Materials Page 1

Item	Quantity	Reference	Part
1	2	C1,C2	0.1uF
2	1	FIX1	FIX35
3	1	JP1	STM06SO
4	8	J1,J2,J3,J4,J5,J6,J7,J8	JSMD
5	1	Q1	MMBFJ310
6	1	Q2	BC857
7	1	R1	4K7
8	1	R2	270
9	1	R3	150K
10	1	R4	470
11	1	TCX1	TCXOS
12	1	U1	74HC390SMD

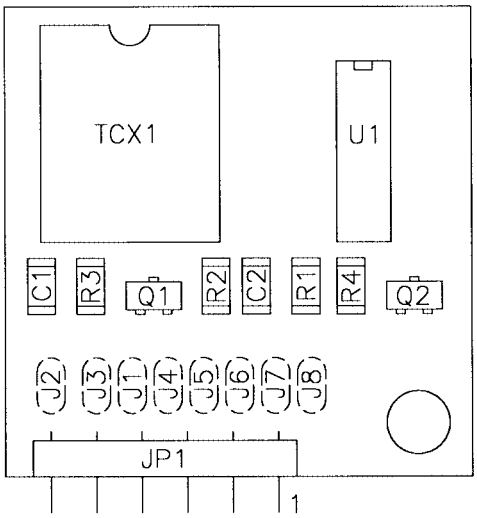

BEXT Inc.®

DENOMINAZIONE
TCXO Card Component Layout / Piano di Montaggio

DISPOSITIVO

SEMILAVORATO	DISEGNATO D'Alessio D.	DISEGNO
MATERIALE	SCALA	
TRATTAMENTO		TAVOLA n di