敬　　呈
CUSTOMER:Chicony

# 承　　认　　书

# SPECIFICATION APPROVAL SHEET

| | |
|---|---|
| 品　名<br>PRODUCT NAME | DCAJ0S10 |
| 客户料号/版次<br>CUSTOMER P/N:/REV. | 072-02151LHA01 |
| (供應商)料号/版次<br>(Vendor)P/N:/REV. | 43A15G03000D21T |
| 單重(單位:克):<br>Weight(Unit:g): | 0.08g |

| （供應商）确认<br>(Vendor) CONFIRMATION | | 客户确认<br>CUSTOMER CONFIRMATION | |
|---|---|---|---|
| 审核 CHECKED BY | 制作 MADE BY | 确认 APPROVED BY | 审核 CHECKED BY |
| Tim | Eva | | |

太盟光電科技股份有限公司 文件管制中心 2023.3.01 文件管制章


供應商名稱：　太盟光電科技股份有限公司

聯系地址：　桃園市平鎮區工業二路5號

聯系E-mail:　hannah.lin@cirocomm.com.tw

聯絡電話：　03-469-9868#625

# SPECIFICATION

**SPEC NO.** : **SP03AE24500-0050**

**PART NO.** : **43A15G03000D21T**

**PRODUCT NAME** : **DCAJ0S10**

**DESCRIPTION** : **Dielectric Chip Antenna (3.23x1.66x1.23 mm) RoHS Compliant Product**

**REVISION STATUS**

| VERSION | DATE | PAGE | REVISION DESCRIPTION | PREPARED | CHECKED | APPROVED |
|---|---|---|---|---|---|---|
| 01 | 2022.05.20 | Whole | New Issued | 翁秀惠 | 馬得淞 | 張敦信、吳佳宗 |
| | | | | | | |
| | | | | | | |
| | | | | | | |
| | | | | | | |
| | | | | | | |
| | | | | | | |
| | | | | | | |
| | | | | | | |
| | | | | | | |
| | | | | | | |
| | | | | | | |
| | | | | | | |
| | | | | | | |
| | | | | | | |
| | | | | | | |
| | | | | | | |
| | | | | | | |
| | | | | | | |
| | | | | | | |
| | | | | | | |

| Prepared By | Checked By | Approved By |
|---|---|---|
| 翁秀惠 | 馬得淞 | 張敦信 吳佳宗 |


This document is held by Cirocomm, cannot be reproduced without permission .

# CIROCOMM TECHNOLOGY .

## *PART NUMBER: 43A15G03000D21T*

### 1. Scope

This specification covers the dielectric chip antenna for Bluetooth / WLAN Applications.

### 2. Name of the product

This product is named "Dielectric Chip Antenna".

### 3. Electrical characteristics

#### 3-1 Electrical characteristics of antenna

The antenna has the electrical characteristics given in Table 1 under the *cirocomm* standard installation conditions shown in the figure of Evaluation Board.

**Table 1**

| No | Parameter | Specification |
|---|---|---|
| 1 | Working Frequency | 2400~2500 MHz |
| 2 | Return Loss | -6.5 dB (Max) |
| 3 | Peak Gain | 2.7 dBi |
| 4 | Impedance | 50 Ohm |
| 5 | Operating Temperature | -40℃ ~ +110℃ |
| 6 | Maximum Power | 4 W |
| 7 | Resistance to Soldering Heats | 10 sec. ( @ 260℃) |
| 8 | Polarization | Linear |
| 9 | Azimuth | Omni-directional |
| 10 | Termination | Cu / Sn (Leadless) |

* Actual performance will depend on customer device environment.

This document is held by Cirocomm, cannot be reproduced without permission .

## 4. Antenna Dimension

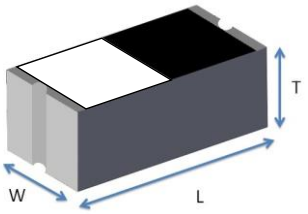


| | Dimension (mm) |
|---|---|
| L | 3.23 ± 0.20 |
| W | 1.66 ± 0.20 |
| T | 1.23 ± 0.20 |

## 5.Recommended PCB Pattern

### 5-1.Evaluation Board Dimension

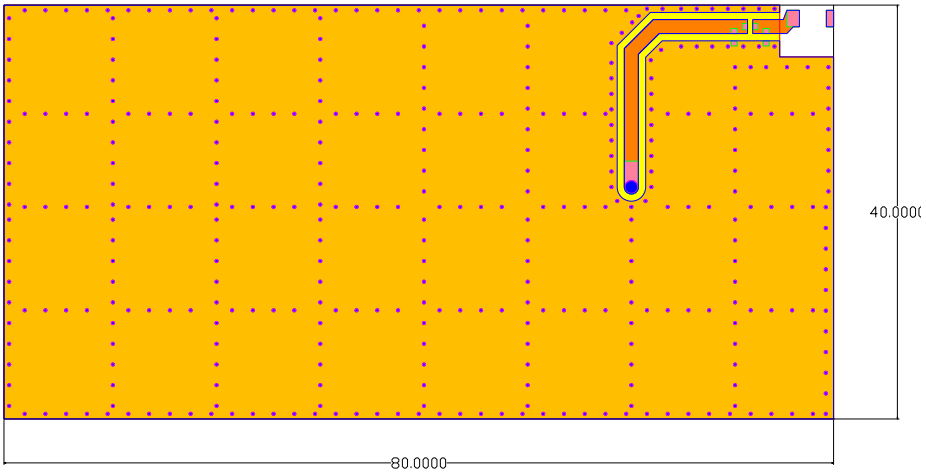


### 5-2.Evaluation Board Dimension

(若淨空區夠大，建議使用此Layout，效能較佳)

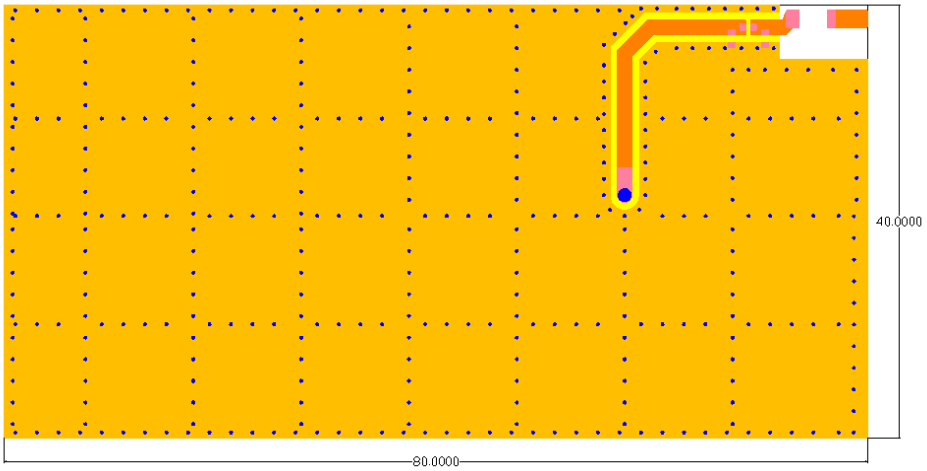


Unit : mm

This document is held by Cirocomm, cannot be reproduced without permission .

**Suggested Matching Circuit**

重要資訊：

匹配元件建議使用精準度高的電感±0.1~0.3nH、電容±0.1pF

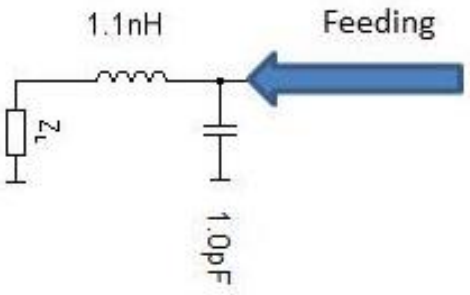


## 5-3Layout Dimensions in Clearance area(Size=5.2*5.0mm)

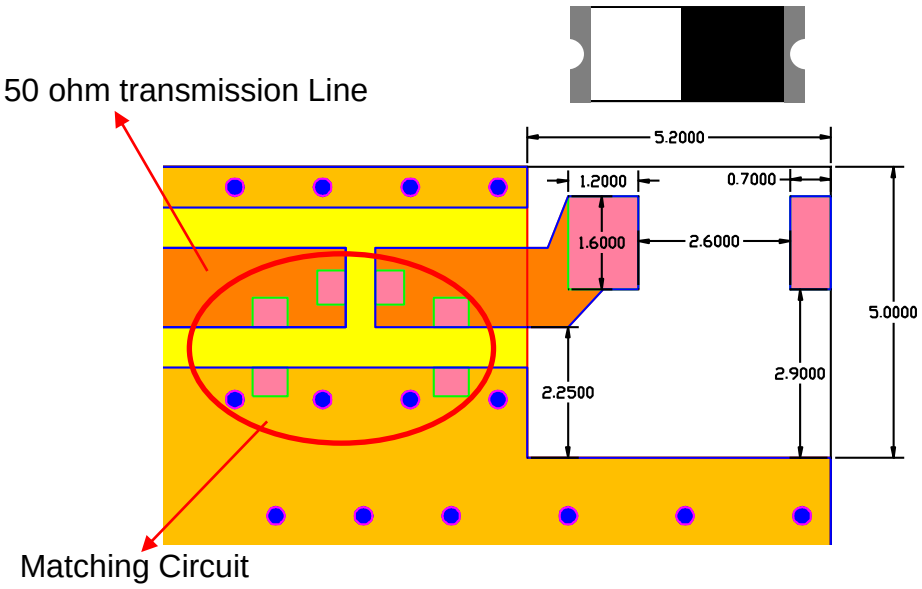


## 5-4.Layout Dimensions in Clearance area(Size=8.2*5.0mm)

(若淨空區夠大，建議使用此Layout，效能較佳)

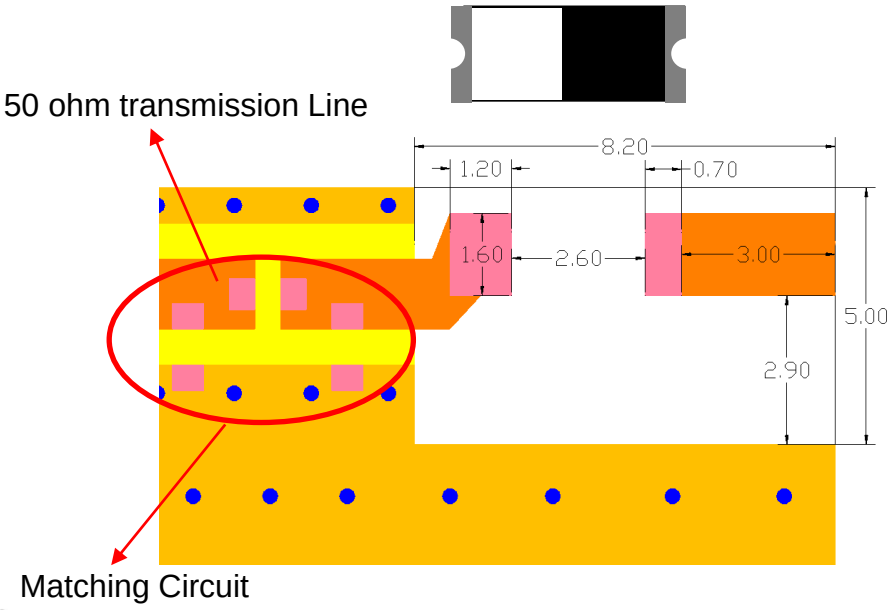


This document is held by Cirocomm, cannot be reproduced without permission .

## FootPrint (Unit : mm)

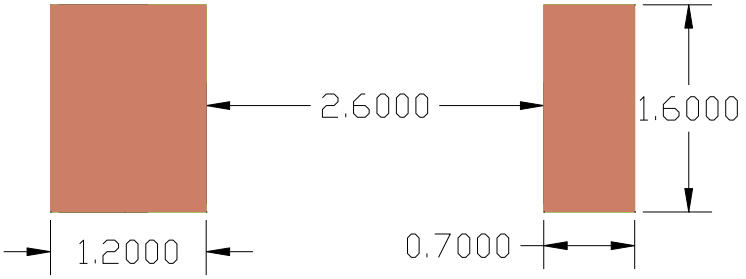


## 6.Measurement Results

### Return Loss

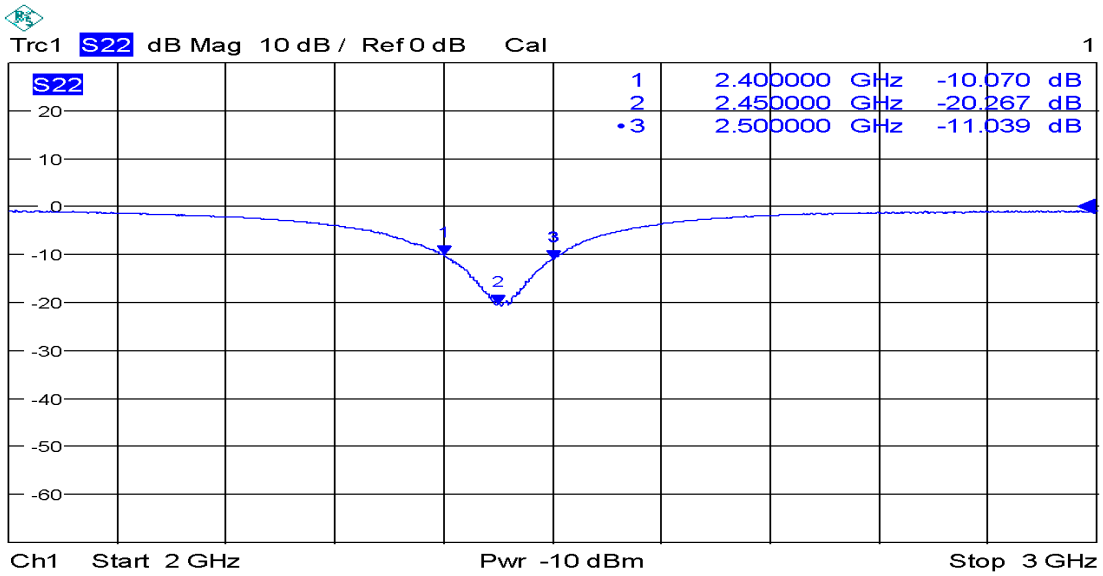


This document is held by Cirocomm, cannot be reproduced without permission .

**Radiation Pattern**

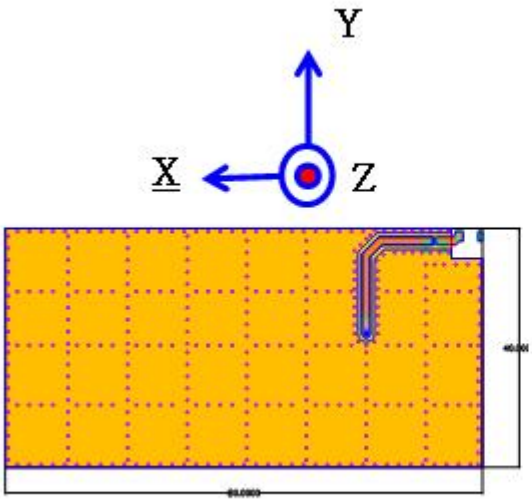


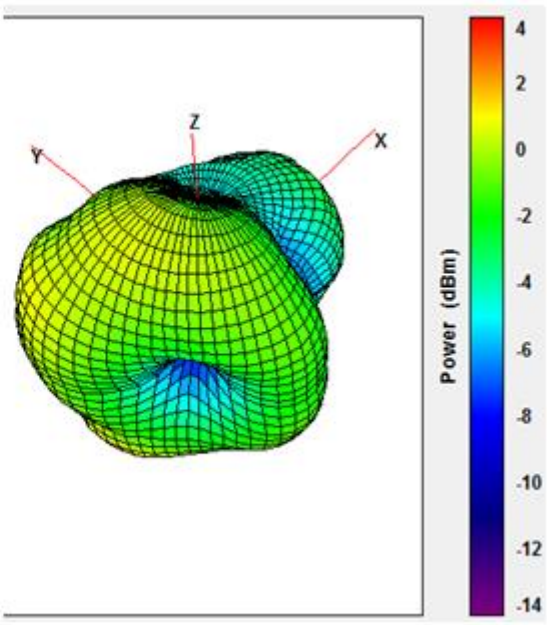


| | Efficiency | Peak Gain |
|---|---|---|
| 2400MHz | 55.21 % | 1.45 dBi |
| 2450MHz | 66.45 % | 2.71 dBi |
| 2500MHz | 57.53 % | 1.98 dBi |

This document is held by Cirocomm, cannot be reproduced without permission .

## 7. Packaging Information

### Tape Specification:

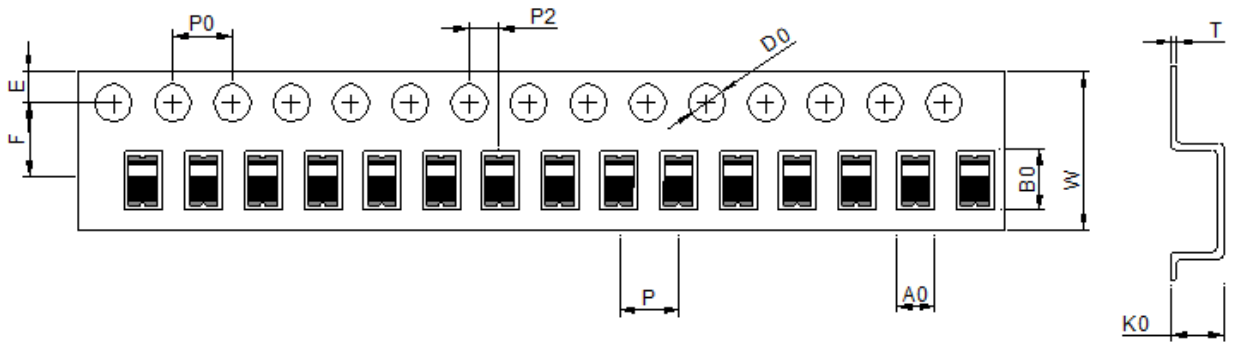


| W | Ao | Bo | Ko | P | F | E | D | D1 | Po | P2 | t |
|---|---|---|---|---|---|---|---|---|---|---|---|
| 8.0 ±0.30 | 1.80 ±0.05 | 3.51 ±0.10 | 1.59 ±0.10 | 4.00 ±0.05 | 3.50 ±0.05 | 1.75 ±0.10 | 1.50 ±0.10 | 0.00 ±0.10 | 4.00 ±0.10 | 2.00 ±0.05 | 0.25 ±0.05 |

**Reel Specification: (7'', Φ180 mm)**

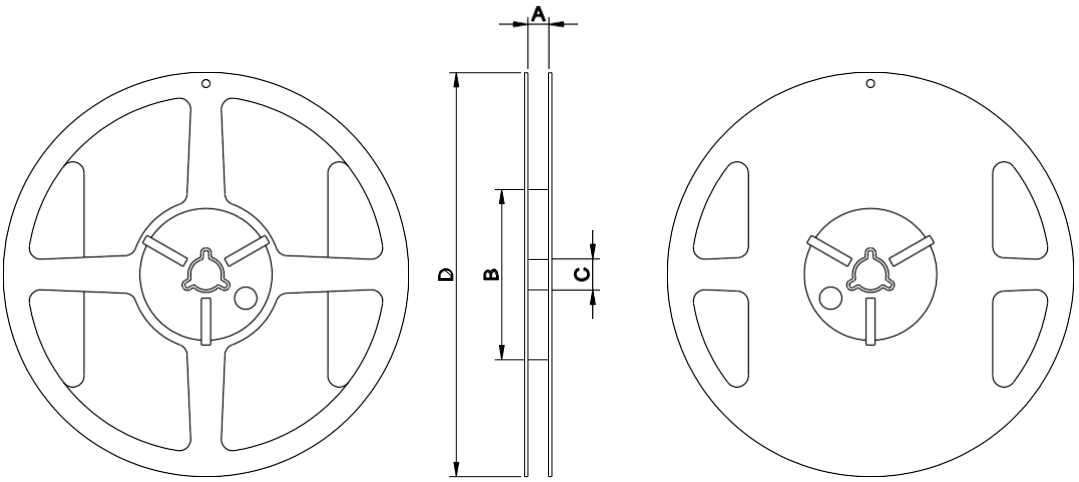


**7''x 8 mm**

| Tape Width(mm) | A(mm) | B(mm) | C(mm) | D(mm) | Chip/Reel(pcs) |
|---|---|---|---|---|---|
| 8 | 9.0±0.5 | 60±2 | 13.5±0.5 | 178±2 | 3000 |

This document is held by Cirocomm, cannot be reproduced without permission .

## 8. Recommended Reflow Temperature Profile

Cirocomm products can be assembled following Pb-free assembly. According to the Standard **IPC/JEDEC J-STD-020C**, the temperature profile suggested is as follow:

| Phase | Profile features | Pb-Free Assembly (SnAgCu) |
|---|---|---|
| PREHEAT | -Temperature Min(Tsmin)<br>-Temperature Max(Tsmax)<br>-Time(ts) form (Tsmin to Tsmax) | 150℃<br>200℃<br>60-120 seconds |
| RAMP-UP | Avg. Ramp-up Rate (Tsmax to TP) | 3℃/second(max) |
| REFLOW | -Temperature(TL)<br>-Total Time above TL (t L) | 217℃<br>30-100 seconds |
| PEAK | -Temperature(TP)<br>-Time(tp) | 260℃<br>10 second |
| RAMP-DOWN | Rate | 6℃ / second max. |
| Time from 25℃ to Peak Temperature | | 8 minutes max. |
| Composition of solder paste | | 96.5Sn/3Ag/0.5Cu |
| Solder Paste Model | | SHENMAO PF606-P26 |

Note：All the temperature measure point is on top surface of the component, if temperature over recommend, it will make component surface peeling or damage.

The graphic shows temperature profile for component assembly process in reflow ovens

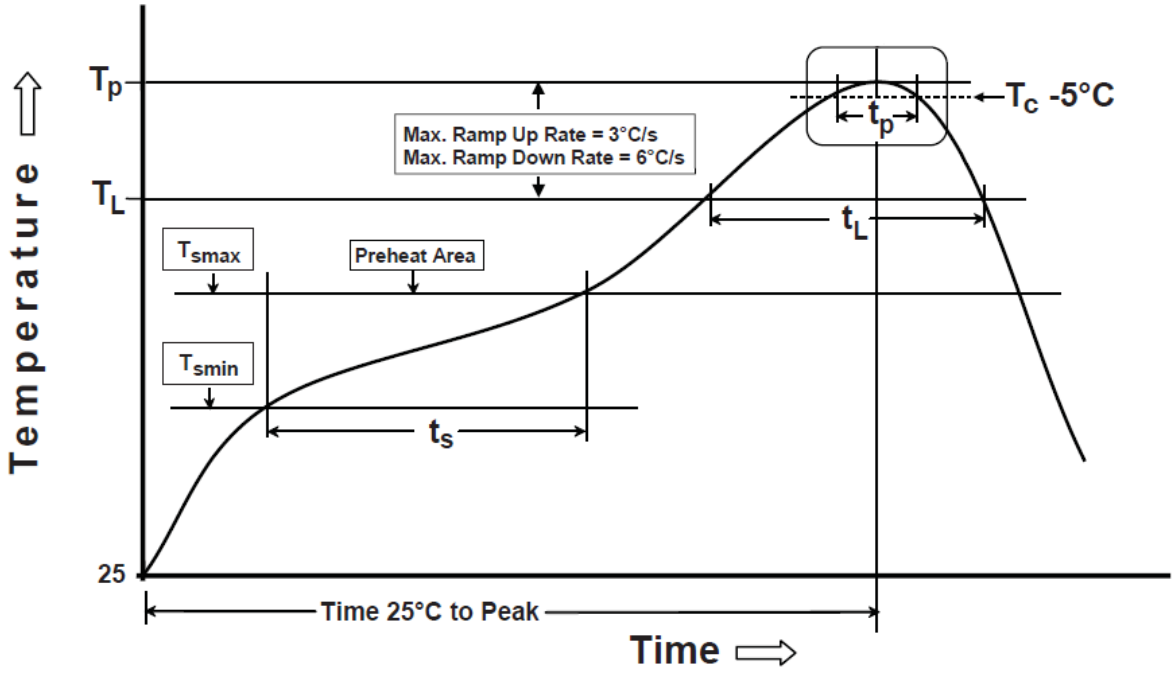


This document is held by Cirocomm, cannot be reproduced without permission .

## Soldering With Iron:

Soldering condition : Soldering iron temperature 270±10 ℃.
Apply preheating at 120℃ for 2-3 minutes. Finish soldering for each terminal within 3 seconds, if soldering iron over temperature 270±10 ℃ or 3 seconds, it will make component surface peeling or damage.
Soldering iron can not leakage of electricity.

This document is held by Cirocomm, cannot be reproduced without permission .