FCC SAR Test Report

APPLICANT	:	**Chicony Electronics Co., Ltd.**
EQUIPMENT	:	**Digital Video Camera**
BRAND NAME	:	**Chicony**
MODEL NAME	:	**C100**
FCC ID	:	**E8HDCB229C100**
STANDARD	:	**FCC 47 CFR Part 2 (2.1093)** **ANSI/IEEE C95.1-1992** **IEEE 1528-2003** **FCC OET Bulletin 65 Supplement C (Edition 01-01)**

The product was completely tested on Aug. 31, 2012. We, SPORTON INTERNATIONAL INC., would like to declare that the tested sample has been evaluated in accordance with the procedures and shown the compliance with the applicable technical standards.

The test results in this report apply exclusively to the tested model / sample. Without written approval of SPORTON INTERNATIONAL INC., the test report shall not be reproduced except in full.

Reviewed by:

Jones Tsai / Manager

Testing Laboratory
1190

SPORTON INTERNATIONAL INC.
No. 52, Hwa Ya 1st Rd., Hwa Ya Technology Park, Kwei-Shan Hsiang, Tao Yuan Hsien, Taiwan, R.O.C.

Table of Contents

1. Statement of Compliance **4**
2. Administration Data **5**
2.1 Testing Laboratory 5
2.2 Applicant 5
2.3 Manufacturer 5
2.4 Application Details 5
3. General Information **6**
3.1 Description of Equipment Under Test (EUT) 6
3.2 Product Photos 7
3.3 Applied Standard 7
3.4 Device Category and SAR Limits 7
3.5 Test Conditions 7
4. Specific Absorption Rate (SAR) **8**
4.1 Introduction 8
4.2 SAR Definition 8
5. SAR Measurement System **9**
5.1 E-Field Probe 10
5.2 Data Acquisition Electronics (DAE) 11
5.3 Robot 11
5.4 Measurement Server 11
5.5 Phantom 12
5.6 Device Holder 13
5.7 Data Storage and Evaluation 14
5.8 Test Equipment List 16
6. Tissue Simulating Liquids **17**
7. SAR Measurement Evaluation **18**
7.1 Purpose of System Performance check 18
7.2 System Setup 18
7.3 Validation Results 19
8. EUT Testing Position **19**
9. Measurement Procedures **20**
9.1 Spatial Peak SAR Evaluation 20
9.2 Area & Zoom Scan Procedures 20
9.3 Volume Scan Procedures 21
9.4 SAR Averaged Methods 21
9.5 Power Drift Monitoring 21
10. SAR Test Configurations **22**
10.1 Exposure Positions Consideration 22
10.2 Conducted RF Output Power (Unit: dBm) 24
11. SAR Test Results **24**
11.1 Test Records for Body SAR Test 24
11.2 Test Records for Hand-held SAR Test 24
12. Uncertainty Assessment **25**
13. References **27**

Appendix A. Plots of System Performance Check
Appendix B. Plots of SAR Measurement
Appendix C. DASY Calibration Certificate
Appendix D. Product Photos
Appendix E. Test Setup Photos

Revision History

REPORT NO.	VERSION	DESCRIPTION	ISSUED DATE
FA280756	Rev. 01	Initial issue of report	Sep. 14, 2012

1. Statement of Compliance

The maximum results of Specific Absorption Rate (SAR) found during testing for **Chicony Electronics Co., Ltd., Digital Video Camera, C100,** are as follows.

<Standalone SAR>

Band	Position	SAR_{1g} (W/kg)
WLAN 2.4G	Body (0 cm Gap)	0.226
WLAN 2.4G	Hands(0 cm Gap)	0.214

This device is in compliance with Specific Absorption Rate (SAR) for general population/uncontrolled exposure limits (1.6 W/kg) specified in FCC 47 CFR part 2 (2.1093) and ANSI/IEEE C95.1-1992, and had been tested in accordance with the measurement methods and procedures specified in IEEE 1528-2003 and FCC OET Bulletin 65 Supplement C (Edition 01-01).

2. Administration Data

2.1 Testing Laboratory

Test Site	SPORTON INTERNATIONAL INC.
Test Site Location	No. 52, Hwa Ya 1st Rd., Hwa Ya Technology Park, Kwei-Shan Hsiang, Tao Yuan Hsien, Taiwan, R.O.C. TEL: +886-3-327-3456 FAX: +886-3-328-4978

2.2 Applicant

Company Name	Chicony Electronics Co., Ltd.
Address	No. 25, Wugong 6th Rd., Wugu Dist., New Taipei City 248, Taiwan (R.O.C.)

2.3 Manufacturer

Company Name	Chicony Electronics (Mainland China II) Co., Ltd.
Address	San Zhong Gong Li Qu, Qingxi, Dongguan, China

2.4 Application Details

Date of Start during the Test	Aug. 31, 2012
Date of End during the Test	Aug. 31, 2012

3. General Information

3.1 Description of Equipment Under Test (EUT)

Product Feature & Specification	
EUT	Digital Video Camera
Brand Name	Chicony
Model Name	C100
FCC ID	E8HDCB229C100
Tx Frequency	2412 MHz ~ 2462 MHz
Rx Frequency	2412 MHz ~ 2462 MHz
Maximum Average Output Power to Antenna	802.11b: 17.36 dBm 802.11g: 17.5 dBm
Antenna Type	Monopole Antenna
HW Version	B3
SW Version	V200
Uplink Modulations	802.11b: DSSS (BPSK / QPSK / CCK) 802.11g : OFDM (BPSK / QPSK / 16QAM / 64QAM)
EUT Stage	Production Unit
Remark: 1. The above EUT's information was declared by manufacturer. Please refer to the specifications or user's manual for more detailed description. 2. Voice call is not supported.	

3.2 Product Photos

Please refer to Appendix D.

3.3 Applied Standard

The Specific Absorption Rate (SAR) testing specification, method and procedure for this device is in accordance with the following standards:

- FCC 47 CFR Part 2 (2.1093)
- ANSI/IEEE C95.1-1992
- IEEE 1528-2003
- FCC OET Bulletin 65 Supplement C (Edition 01-01)
- FCC KDB 447498 D01 v04
- FCC KDB 941225 D06 v01
- FCC KDB 941225 D07 v01
- FCC KDB 248227 D01 v01r02

3.4 Device Category and SAR Limits

This device belongs to portable device category because its radiating structure is allowed to be used within 20 centimeters of the body of the user. Limit for General Population/Uncontrolled exposure should be applied for this device, it is 1.6 W/kg as averaged over any 1 gram of tissue.

3.5 Test Conditions

3.5.1 Ambient Condition

Ambient Temperature	20 to 24 ℃
Humidity	< 60 %

3.5.2 Test Configuration

For WLAN SAR testing, WLAN engineering testing software installed on the EUT can provide continuous transmitting RF signal.

4. Specific Absorption Rate (SAR)

4.1 Introduction

SAR is related to the rate at which energy is absorbed per unit mass in an object exposed to a radio field. The SAR distribution in a biological body is complicated and is usually carried out by experimental techniques or numerical modeling. The standard recommends limits for two tiers of groups, occupational/controlled and general population/uncontrolled, based on a person's awareness and ability to exercise control over his or her exposure. In general, occupational/controlled exposure limits are higher than the limits for general population/uncontrolled.

4.2 SAR Definition

The SAR definition is the time derivative (rate) of the incremental energy (dW) absorbed by (dissipated in) an incremental mass (dm) contained in a volume element (dv) of a given density (ρ). The equation description is as below:

$$\mathbf{SAR} = \frac{\mathbf{d}}{\mathbf{dt}}\left(\frac{\mathbf{dW}}{\mathbf{dm}}\right) = \frac{\mathbf{d}}{\mathbf{dt}}\left(\frac{\mathbf{dW}}{\boldsymbol{\rho}\mathbf{dv}}\right)$$

SAR is expressed in units of Watts per kilogram (W/kg)

SAR measurement can be either related to the temperature elevation in tissue by

$$\mathbf{SAR} = \mathbf{C}\left(\frac{\boldsymbol{\delta}\mathbf{T}}{\boldsymbol{\delta}\mathbf{t}}\right)$$

Where: C is the specific heat capacity, δT is the temperature rise and δt is the exposure duration, or related to the electrical field in the tissue by

$$\mathbf{SAR} = \frac{\boldsymbol{\sigma}|\mathbf{E}|^2}{\boldsymbol{\rho}}$$

Where: σ is the conductivity of the tissue, ρ is the mass density of the tissue and E is the RMS electrical field strength.

However for evaluating SAR of low power transmitter, electrical field measurement is typically applied.

5. SAR Measurement System

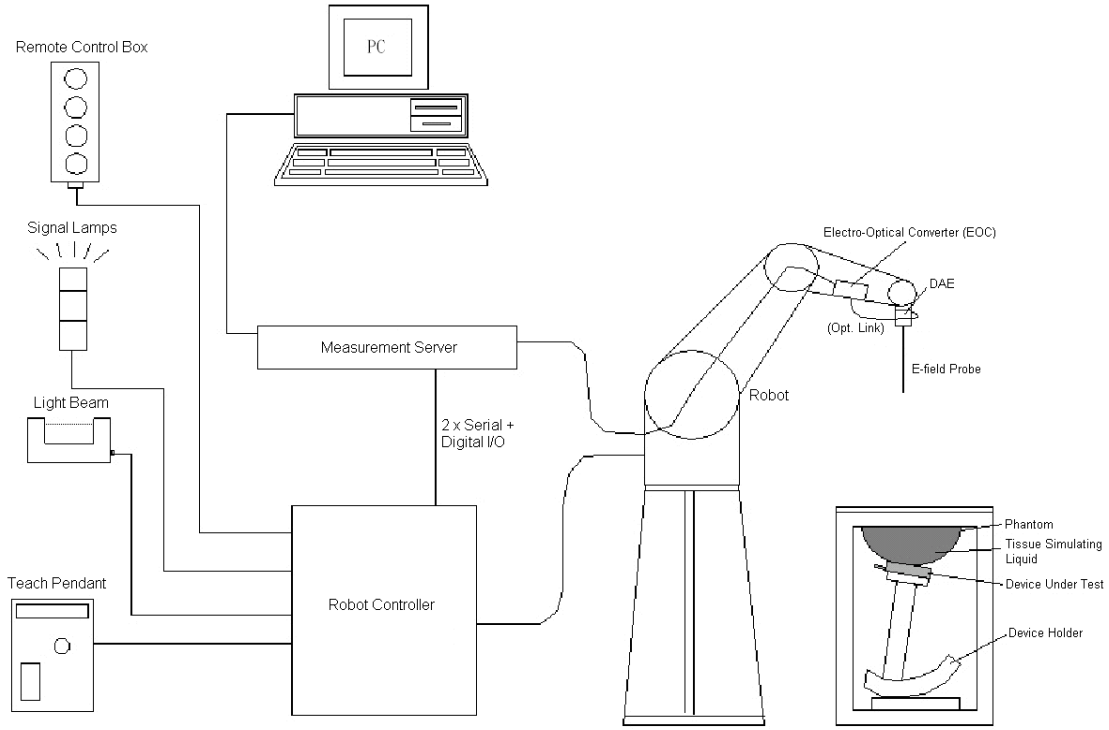

Fig 5.1 SPEAG DASY System Configurations

The DASY system for performance compliance tests is illustrated above graphically. This system consists of the following items:

- A standard high precision 6-axis robot with controller, a teach pendant and software
- A data acquisition electronic (DAE) attached to the robot arm extension
- A dosimetric probe equipped with an optical surface detector system
- The electro-optical converter (EOC) performs the conversion between optical and electrical signals
- A measurement server performs the time critical tasks such as signal filtering, control of the robot operation and fast movement interrupts.
- A probe alignment unit which improves the accuracy of the probe positioning
- A computer operating Windows XP
- DASY software
- Remove control with teach pendant and additional circuitry for robot safety such as warming lamps, etc.
- The SAM twin phantom
- A device holder
- Tissue simulating liquid
- Dipole for evaluating the proper functioning of the system

Some of the components are described in details in the following sub-sections.

5.1 E-Field Probe

The SAR measurement is conducted with the dosimetric probe (manufactured by SPEAG).The probe is specially designed and calibrated for use in liquid with high permittivity. The dosimetric probe has special calibration in liquid at different frequency. This probe has a built in optical surface detection system to prevent from collision with phantom.

5.1.1 E-Field Probe Specification

<ET3DV6 / ET3DV6R Probe >

Construction	Symmetrical design with triangular core Built-in optical fiber for surface detection system. Built-in shielding against static charges. PEEK enclosure material (resistant to organic solvents, e.g., DGBE)
Frequency	10 MHz to 3 GHz; Linearity: ± 0.2 dB
Directivity	± 0.2 dB in HSL (rotation around probe axis) ± 0.4 dB in HSL (rotation normal to probe axis)
Dynamic Range	5 µW/g to 100 mW/g; Linearity: ± 0.2 dB
Dimensions	Overall length: 330 mm (Tip: 16 mm) Tip diameter: 6.8 mm (Body: 12 mm) Distance from probe tip to dipole centers: 2.7 mm

Fig 5.2 Photo of ET3DV6/ET3DV6R

<EX3DV4 / ES3DV4 Probe>

Construction	Symmetrical design with triangular core Built-in shielding against static charges PEEK enclosure material (resistant to organic solvents, e.g., DGBE)
Frequency	10 MHz to 6 GHz; Linearity: ± 0.2 dB
Directivity	± 0.3 dB in HSL (rotation around probe axis) ± 0.5 dB in tissue material (rotation normal to probe axis)
Dynamic Range	10 µW/g to 100 mW/g; Linearity: ± 0.2 dB (noise: typically < 1 µW/g)
Dimensions	Overall length: 330 mm (Tip: 20 mm) Tip diameter: 2.5 mm (Body: 12 mm) Typical distance from probe tip to dipole centers: 1 mm

Fig 5.3 Photo of EX3DV4/ES3DV4

5.1.2 E-Field Probe Calibration

Each probe needs to be calibrated according to a dosimetric assessment procedure with accuracy better than ± 10%. The spherical isotropy shall be evaluated and within ± 0.25 dB. The sensitivity parameters (NormX, NormY, and NormZ), the diode compression parameter (DCP) and the conversion factor (ConvF) of the probe are tested. The calibration data can be referred to appendix C of this report.

5.2 Data Acquisition Electronics (DAE)

The data acquisition electronics (DAE) consists of a highly sensitive electrometer-grade preamplifier with auto-zeroing, a channel and gain-switching multiplexer, a fast 16 bit AD-converter and a command decoder and control logic unit. Transmission to the measurement server is accomplished through an optical downlink for data and status information as well as an optical uplink for commands and the clock.

The input impedance of the DAE is 200 MOhm; the inputs are symmetrical and floating. Common mode rejection is above 80 dB.

Fig 5.4 Photo of DAE

5.3 Robot

The SPEAG DASY system uses the high precision robots (DASY4: RX90BL; DASY5: TX90XL) type from Stäubli SA (France). For the 6-axis controller system, the robot controller version (DASY4: CS7MB; DASY5: CS8c) from Stäubli is used. The Stäubli robot series have many features that are important for our application:

- High precision (repeatability ±0.035 mm)
- High reliability (industrial design)
- Jerk-free straight movements
- Low ELF interference (the closed metallic construction shields against motor control fields)

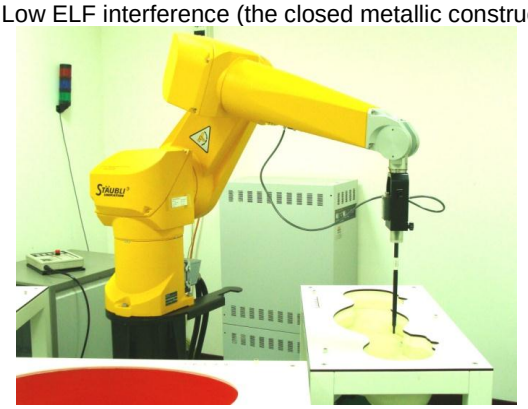

Fig 5.5 Photo of DASY4

Fig 5.6 Photo of DASY5

5.4 Measurement Server

The measurement server is based on a PC/104 CPU board with CPU (DASY4: 166 MHz, Intel Pentium; DASY5: 400 MHz, Intel Celeron), chipdisk (DASY4: 32 MB; DASY5: 128 MB), RAM (DASY4: 64 MB, DASY5: 128 MB). The necessary circuits for communication with the DAE electronic box, as well as the 16 bit AD converter system for optical detection and digital I/O interface are contained on the DASY I/O board, which is directly connected to the PC/104 bus of the CPU board.

The measurement server performs all the real-time data evaluation for field measurements and surface detection, controls robot movements and handles safety operations.

Fig 5.7 Photo of Server for DASY4

Fig 5.8 Photo of Server for DASY5

5.5 Phantom

<SAM Twin Phantom>

Shell Thickness	2 ± 0.2 mm; Center ear point: 6 ± 0.2 mm
Filling Volume	Approx. 25 liters
Dimensions	Length: 1000 mm; Width: 500 mm; Height: adjustable feet
Measurement Areas	Left Hand, Right Hand, Flat Phantom

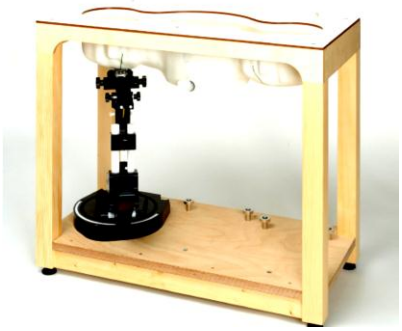

Fig 5.9 Photo of SAM Phantom

The bottom plate contains three pair of bolts for locking the device holder. The device holder positions are adjusted to the standard measurement positions in the three sections. A white cover is provided to tap the phantom during off-periods to prevent water evaporation and changes in the liquid parameters. On the phantom top, three reference markers are provided to identify the phantom position with respect to the robot.

<ELI4 Phantom>

Shell Thickness	2 ± 0.2 mm (sagging: <1%)
Filling Volume	Approx. 30 liters
Dimensions	Major ellipse axis: 600 mm Minor axis: 400 mm

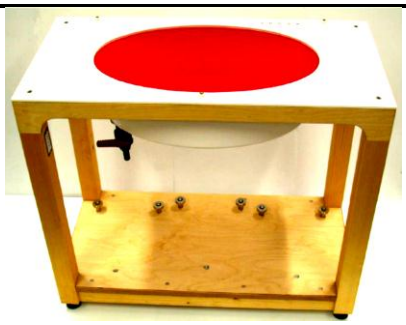

Fig 5.10 Photo of ELI4 Phantom

The ELI4 phantom is intended for compliance testing of handheld and body-mounted wireless devices in the frequency range of 30 MHz to 6 GHz. ELI4 is fully compatible with standard and all known tissue simulating liquids.

5.6 Device Holder

<Device Holder for SAM Twin Phantom>

The SAR in the phantom is approximately inversely proportional to the square of the distance between the source and the liquid surface. For a source at 5 mm distance, a positioning uncertainty of ± 0.5 mm would produce a SAR uncertainty of ± 20 %. Accurate device positioning is therefore crucial for accurate and repeatable measurements. The positions in which the devices must be measured are defined by the standards.

The DASY device holder is designed to cope with different positions given in the standard. It has two scales for the device rotation (with respect to the body axis) and the device inclination (with respect to the line between the ear reference points). The rotation center for both scales is the ear reference point (ERP). Thus the device needs no repositioning when changing the angles.

The DASY device holder is constructed of low-loss POM material having the following dielectric parameters: relative permittivity ε = 3 and loss tangent δ = 0.02. The amount of dielectric material has been reduced in the closest vicinity of the device, since measurements have suggested that the influence of the clamp on the test results could thus be lowered.

Fig 5.11 Device Holder

<Laptop Extension Kit>

The extension is lightweight and made of POM, acrylic glass and foam. It fits easily on the upper part of the mounting device in place of the phone positioned. The extension is fully compatible with the SAM Twin and ELI phantoms.

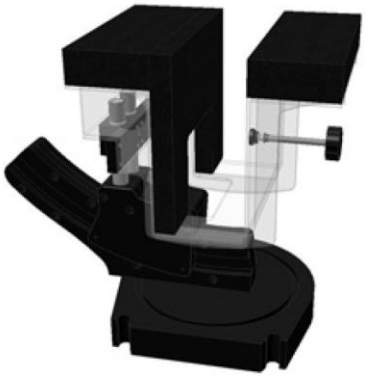

Fig 5.12 Laptop Extension Kit

5.7 Data Storage and Evaluation

5.7.1 Data Storage

The DASY software stores the assessed data from the data acquisition electronics as raw data (in microvolt readings from the probe sensors), together with all the necessary software parameters for the data evaluation (probe calibration data, liquid parameters and device frequency and modulation data) in measurement files. The post-processing software evaluates the desired unit and format for output each time the data is visualized or exported. This allows verification of the complete software setup even after the measurement and allows correction of erroneous parameter settings. For example, if a measurement has been performed with an incorrect crest factor parameter in the device setup, the parameter can be corrected afterwards and the data can be reevaluated.

The measured data can be visualized or exported in different units or formats, depending on the selected probe type (e.g., [V/m], [A/m], [mW/g]). Some of these units are not available in certain situations or give meaningless results, e.g., a SAR-output in a non-lose media, will always be zero. Raw data can also be exported to perform the evaluation with other software packages.

5.7.2 Data Evaluation

The DASY post-processing software (SEMCAD) automatically executes the following procedures to calculate the field units from the microvolt readings at the probe connector. The parameters used in the evaluation are stored in the configuration modules of the software：

Probe parameters：	- Sensitivity	$Norm_i$, a_{i0}, a_{i1}, a_{i2}
	- Conversion factor	$ConvF_i$
	- Diode compression point	dcp_i
Device parameters：	- Frequency	f
	- Crest factor	cf
Media parameters：	- Conductivity	σ
	- Density	ρ

These parameters must be set correctly in the software. They can be found in the component documents or they can be imported into the software from the configuration files issued for the DASY components. In the direct measuring mode of the multi-meter option, the parameters of the actual system setup are used. In the scan visualization and export modes, the parameters stored in the corresponding document files are used.

The first step of the evaluation is a linearization of the filtered input signal to account for the compression characteristics of the detector diode. The compensation depends on the input signal, the diode type and the DC-transmission factor from the diode to the evaluation electronics. If the exciting field is pulsed, the crest factor of the signal must be known to correctly compensate for peak power.

The formula for each channel can be given as：

$$\mathbf{V_i = U_i + U_i^2 \cdot \frac{cf}{dcp_i}}$$

with V_i = compensated signal of channel i, (i = x, y, z)
U_i = input signal of channel i, (i = x, y, z)
cf = crest factor of exciting field (DASY parameter)
dcp_i = diode compression point (DASY parameter)

From the compensated input signals, the primary field data for each channel can be evaluated：

E-field Probes：$\mathbf{E_i = \sqrt{\frac{V_i}{Norm_i \cdot ConvF}}}$

H-field Probes：$\mathbf{H_i = \sqrt{V_i} \cdot \frac{a_{i0}+a_{i1}f+a_{i2}f^2}{f}}$

with V_i = compensated signal of channel i, (i = x, y, z)
$Norm_i$ = sensor sensitivity of channel i, (i = x, y, z), μV/(V/m)^2 for E-field Probes
ConvF = sensitivity enhancement in solution
a_{ij} = sensor sensitivity factors for H-field probes
f = carrier frequency [GHz]
E_i = electric field strength of channel i in V/m
H_i = magnetic field strength of channel i in A/m

The RSS value of the field components gives the total field strength (Hermitian magnitude)：

$$\mathbf{E_{tot} = \sqrt{E_x^2 + E_y^2 + E_z^2}}$$

The primary field data are used to calculate the derived field units.

$$\mathbf{SAR = E_{tot}^2 \cdot \frac{\sigma}{\rho \cdot 1000}}$$

with SAR = local specific absorption rate in mW/g
E_{tot} = total field strength in V/m
σ = conductivity in [mho/m] or [Siemens/m]
ρ = equivalent tissue density in g/cm^3

Note that the density is set to 1, to account for actual head tissue density rather than the density of the tissue simulating liquid.

5.8 Test Equipment List

Manufacturer	Name of Equipment	Type/Model	Serial Number	Calibration	
				Last Cal.	Due Date
SPEAG	2450MHz System Validation Kit	D2450V2	736	Jul. 25, 2011	Jul. 24, 2013
SPEAG	Data Acquisition Electronics	DAE3	495	Apr. 23, 2012	Apr. 22, 2013
SPEAG	Dosimetric E-Field Probe	EX3DV4	3792	Jun. 21, 2012	Jun. 20, 2013
SPEAG	Device Holder	N/A	N/A	NCR	NCR
SPEAG	SAM Phantom	QD 000 P40 C	TP-1303	NCR	NCR
SPEAG	SAM Phantom	QD 000 P40 C	TP-1383	NCR	NCR
SPEAG	SAM Phantom	QD 000 P40 C	TP-1446	NCR	NCR
SPEAG	SAM Phantom	QD 000 P40 C	TP-1478	NCR	NCR
SPEAG	SAM Phantom	QD 000 P41 C	TP-1150	NCR	NCR
SPEAG	SAM Phantom	QD 000 P40 CD	TP-1644	NCR	NCR
SPEAG	SAM Phantom	SM 000 T01 DA	TP-1542	NCR	NCR
SPEAG	ELI4 Phantom	QD 0VA 001 BB	1026	NCR	NCR
SPEAG	ELI4 Phantom	QD 0VA 001 BA	1029	NCR	NCR
SPEAG	ELI4 Phantom	QD 0VA 002 AA	TP-1127	NCR	NCR
SPEAG	ELI4 Phantom	QD 0VA 002 AA	TP-1131	NCR	NCR
Agilent	Network Analyzer	E5071C	MY46101588	May 11, 2012	May 10, 2013
Agilent	ESG Vector Series Signal Generator	E4438C	MY49070755	Oct. 17, 2011	Oct. 16, 2012
Anritsu	Power Meter	ML2495A	0932001	Sep. 21, 2011	Sep. 20, 2012
Anritsu	Radio Communication Analyzer	MT8820C	6201074414	Dec. 21, 2011	Dec. 20, 2012
Agilent	Wireless Communication Test Set	E5515C	MY48360820	Jan. 05, 2012	Jan. 04, 2014
Agilent	Wireless Communication Test Set	E5515C	GB46311322	Mar. 23, 2011	Mar. 22, 2013
Agilent	Wireless Communication Test Set	E5515C	MY50264370	Apr. 19, 2011	Apr. 18, 2013
Agilent	Wireless Communication Test Set	E5515C	MY50266977	Nov. 13, 2011	Nov. 12, 2013
R&S	Universal Digital Radiocommunication Tester	CMU200	106656	Jun. 28, 2012	Jun. 27, 2013
R&S	Spectrum Analyzer	FSP	101131	Jul. 23, 2012	Jul. 22, 2013

Table 5.1 Test Equipment List

Note:

1. The calibration certificate of DASY can be referred to appendix C of this report.
2. Referring to KDB 450824 D02, the dipole calibration interval can be extended to 3 years with justification. The dipoles are also not physically damaged, or repaired during the interval.
3. The justification data of dipole D2450V2, SN: 736 can be found in appendix C. The return loss is < -20dB, within 20% of prior calibration, the impedance is within 5 ohm of prior calibration.

6. Tissue Simulating Liquids

For the measurement of the field distribution inside the SAM phantom with DASY, the phantom must be filled with around 25 liters of homogeneous body tissue simulating liquid. For head SAR testing, the liquid height from the ear reference point (ERP) of the phantom to the liquid top surface is larger than 15 cm, which is shown in Fig. 6.1. For body SAR testing, the liquid height from the center of the flat phantom to the liquid top surface is larger than 15 cm, which is shown in Fig. 6.2.

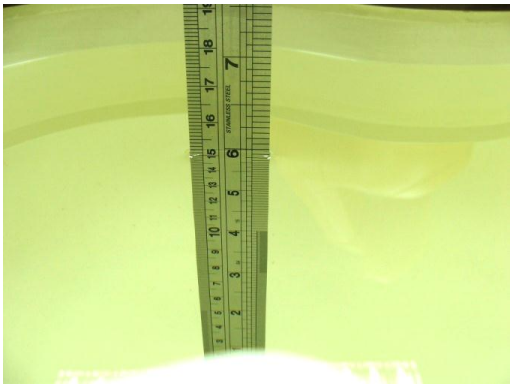

Fig 6.1 Photo of Liquid Height for Head SAR

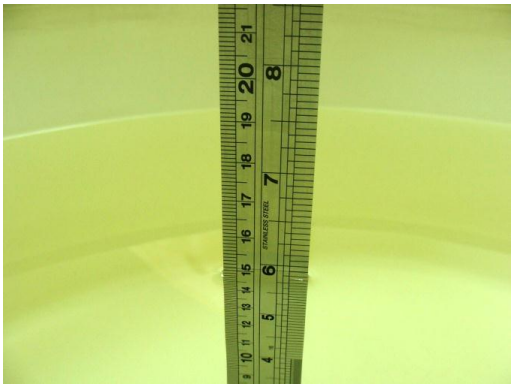

Fig 6.2 Photo of Liquid Height for Body SAR

The following table gives the recipes for tissue simulating liquid.

Frequency (MHz)	Water (%)	Sugar (%)	Cellulose (%)	Salt (%)	Preventol (%)	DGBE (%)	Conductivity (σ)	Permittivity (ε_r)
For Body								
2450	68.6	0	0	0	0	31.4	1.95	52.7

Table 6.1 Recipes of Tissue Simulating Liquid

The dielectric parameters of the liquids were verified prior to the SAR evaluation using an Agilent 85070D Dielectric Probe Kit and an Agilent Network Analyzer.

The following table shows the measuring results for simulating liquid.

Freq. (MHz)	Liquid Type	Temp. (℃)	Conductivity (σ)	Permittivity (ε_r)	Conductivity Target (σ)	Permittivity Target (ε_r)	Delta (σ) (%)	Delta (ε_r) (%)	Limit (%)	Date
2450	Body	21.3	2.02	53.849	1.95	52.7	3.59	2.18	±5	Aug. 31, 2012

Table 6.2 Measuring Results for Simulating Liquid

7. SAR Measurement Evaluation

Each DASY system is equipped with one or more system validation kits. These units, together with the predefined measurement procedures within the DASY software, enable the user to conduct the system performance check and system validation. System validation kit includes a dipole, tripod holder to fix it underneath the flat phantom and a corresponding distance holder.

7.1 Purpose of System Performance check

The system performance check verifies that the system operates within its specifications. System and operator errors can be detected and corrected. It is recommended that the system performance check be performed prior to any usage of the system in order to guarantee reproducible results. The system performance check uses normal SAR measurements in a simplified setup with a well characterized source. This setup was selected to give a high sensitivity to all parameters that might fail or vary over time. The system check does not intend to replace the calibration of the components, but indicates situations where the system uncertainty is exceeded due to drift or failure.

7.2 System Setup

In the simplified setup for system evaluation, the EUT is replaced by a calibrated dipole and the power source is replaced by a continuous wave that comes from a signal generator. The calibrated dipole must be placed beneath the flat phantom section of the SAM twin phantom with the correct distance holder. The distance holder should touch the phantom surface with a light pressure at the reference marking and be oriented parallel to the long side of the phantom. The equipment setup is shown below:

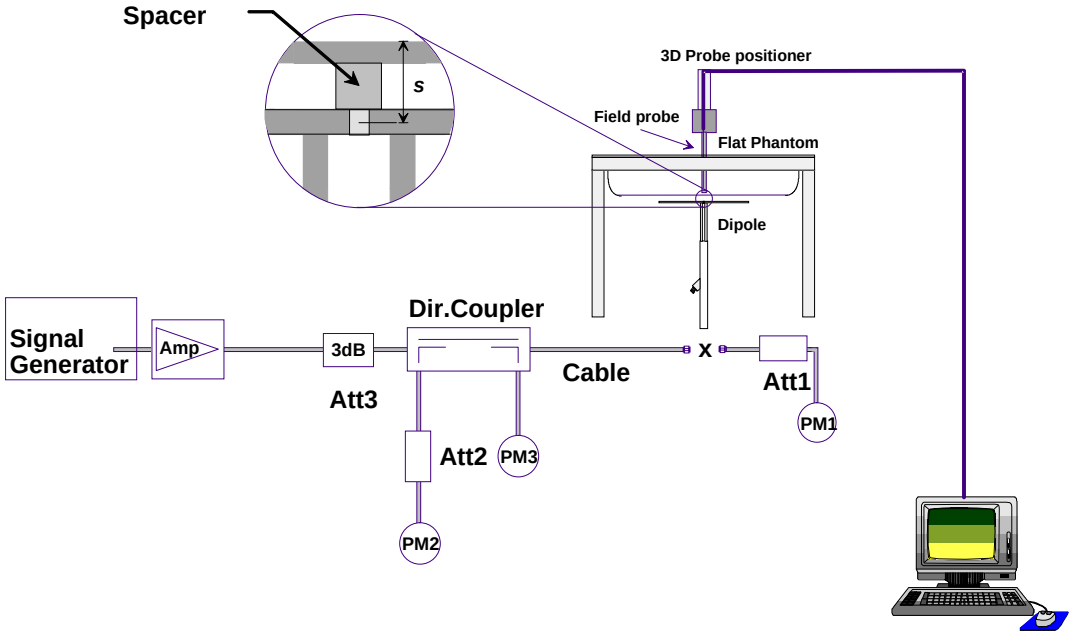

Fig 7.1 System Setup for System Evaluation

1. Signal Generator
2. Amplifier
3. Directional Coupler
4. Power Meter
5. Calibrated Dipole

The output power on dipole port must be calibrated to 24 dBm (250 mW) before dipole is connected.

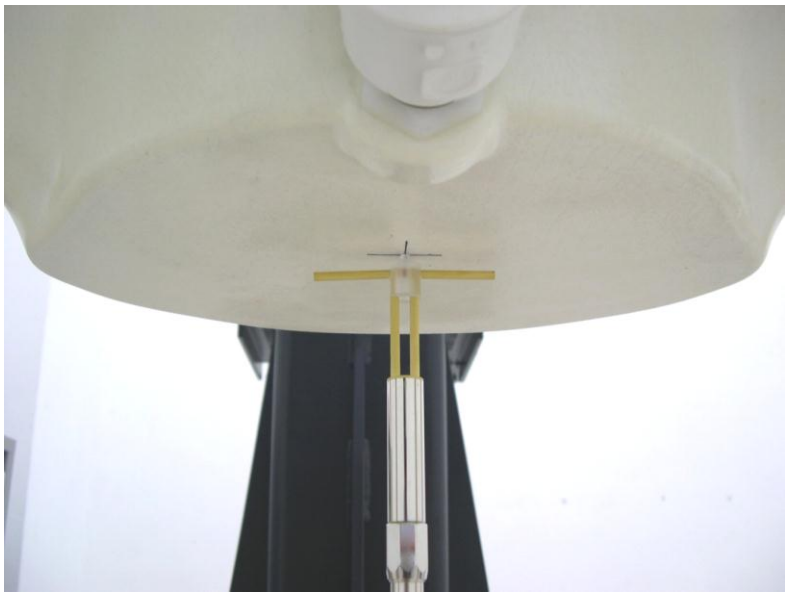

Fig 7.2 Photo of Dipole Setup

7.3 Validation Results

Comparing to the original SAR value provided by SPEAG, the validation data should be within its specification of 10 %. Table 7.1 shows the target SAR and measured SAR after normalized to 1W input power. The table below indicates the system performance check can meet the variation criterion and the plots can be referred to Appendix A of this report.

Measurement Date	Frequency (MHz)	Liquid Type	Targeted SAR_{1g} (W/kg)	Measured SAR_{1g} (W/kg)	Normalized SAR_{1g} (W/kg)	Deviation (%)
Aug. 31, 2012	2450	Body	52.3	13	52.00	-0.57

Table 7.1 Target and Measurement SAR after Normalized

8. EUT Testing Position

This DUT was tested in six different positions. They are Back, Front, Top Side, Bottom Side, Left Side, and Right Side. In these positions, the surface of DUT is touching with phantom 0 mm gap. Please refer to Appendix E for the test setup photos.

9. Measurement Procedures

The measurement procedures are as follows:

(a) Use base station simulator (if applicable) or engineering software to transmit RF power continuously (continuous Tx) in the highest power channel.
(b) Keep EUT to radiate maximum output power or 100% duty factor (if applicable)
(c) Measure output power through RF cable and power meter.
(d) Place the EUT in the positions as Appendix E demonstrates.
(e) Set scan area, grid size and other setting on the DASY software.
(f) Measure SAR results for the highest power channel on each testing position.
(g) Find out the largest SAR result on these testing positions of each band
(h) Measure SAR results for other channels in worst SAR testing position if the SAR of highest power channel is larger than 0.8 W/kg

According to the test standard, the recommended procedure for assessing the peak spatial-average SAR value consists of the following steps:

(a) Power reference measurement
(b) Area scan
(c) Zoom scan
(d) Power drift measurement

9.1 Spatial Peak SAR Evaluation

The procedure for spatial peak SAR evaluation has been implemented according to the test standard. It can be conducted for 1g and 10g, as well as for user-specific masses. The DASY software includes all numerical procedures necessary to evaluate the spatial peak SAR value.

The base for the evaluation is a "cube" measurement. The measured volume must include the 1g and 10g cubes with the highest averaged SAR values. For that purpose, the center of the measured volume is aligned to the interpolated peak SAR value of a previously performed area scan.

The entire evaluation of the spatial peak values is performed within the post-processing engine (SEMCAD). The system always gives the maximum values for the 1g and 10g cubes. The algorithm to find the cube with highest averaged SAR is divided into the following stages:

(a) Extraction of the measured data (grid and values) from the Zoom Scan
(b) Calculation of the SAR value at every measurement point based on all stored data (A/D values and measurement parameters)
(c) Generation of a high-resolution mesh within the measured volume
(d) Interpolation of all measured values form the measurement grid to the high-resolution grid
(e) Extrapolation of the entire 3-D field distribution to the phantom surface over the distance from sensor to surface
(f) Calculation of the averaged SAR within masses of 1g and 10g

9.2 Area & Zoom Scan Procedures

First Area Scan is used to locate the approximate location(s) of the local peak SAR value(s). The measurement grid within an Area Scan is defined by the grid extent, grid step size and grid offset. Next, in order to determine the EM field distribution in a three-dimensional spatial extension, Zoom Scan is required. The Zoom Scan measures 5x5x7 points with step size 8, 8 and 5 mm for 300 MHz to 3 GHz, and 8x8x8 points with step size 4, 4 and 2.5 mm for 3 GHz to 6 GHz. The Zoom Scan is performed around the highest E-field value to determine the averaged SAR-distribution over 10 g.

9.3 Volume Scan Procedures

The volume scan is used for assess overlapping SAR distributions for antennas transmitting in different frequency bands. It is equivalent to an oversized zoom scan used in standalone measurements. The measurement volume will be used to enclose all the simultaneous transmitting antennas. For antennas transmitting simultaneously in different frequency bands, the volume scan is measured separately in each frequency band. In order to sum correctly to compute the 1g aggregate SAR, the EUT remain in the same test position for all measurements and all volume scan use the same spatial resolution and grid spacing (step-size is 4, 4 and 2.5 mm). When all volume scan were completed, the software, SEMCAD postprocessor can combine and subsequently superpose these measurement data to calculating the multiband SAR.

9.4 SAR Averaged Methods

In DASY, the interpolation and extrapolation are both based on the modified Quadratic Shepard's method. The interpolation scheme combines a least-square fitted function method and a weighted average method which are the two basic types of computational interpolation and approximation.

Extrapolation routines are used to obtain SAR values between the lowest measurement points and the inner phantom surface. The extrapolation distance is determined by the surface detection distance and the probe sensor offset. The uncertainty increases with the extrapolation distance. To keep the uncertainty within 1% for the 1 g and 10 g cubes, the extrapolation distance should not be larger than 5 mm.

9.5 Power Drift Monitoring

All SAR testing is under the EUT install full charged battery and transmit maximum output power. In DASY measurement software, the power reference measurement and power drift measurement procedures are used for monitoring the power drift of EUT during SAR test. Both these procedures measure the field at a specified reference position before and after the SAR testing. The software will calculate the field difference in dB. If the power drifts more than 5%, the SAR will be retested.

10. SAR Test Configurations

10.1 Exposure Positions Consideration

< Body>

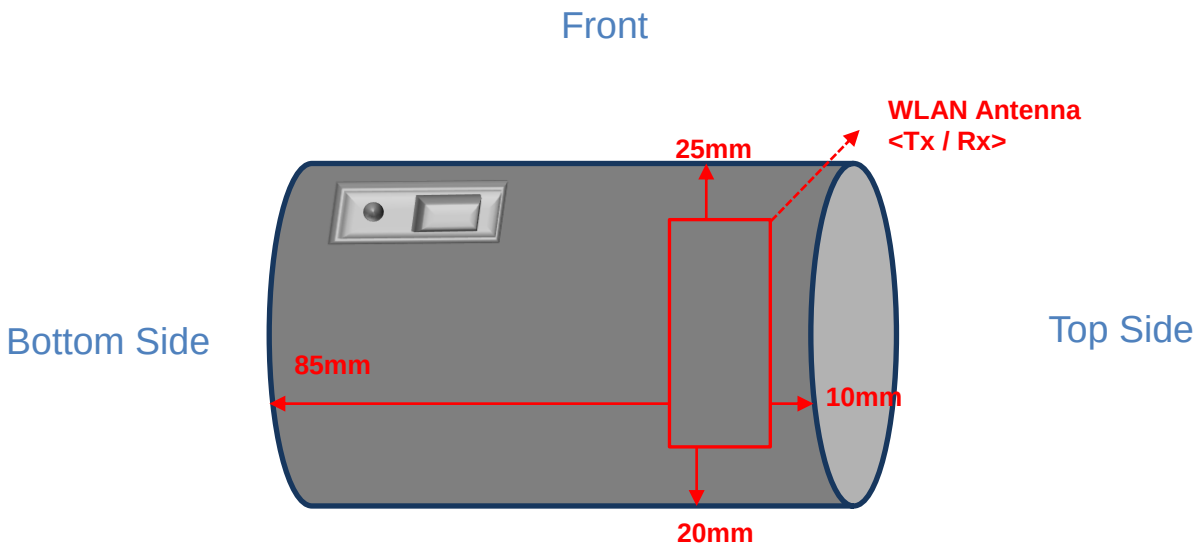

Body SAR Test distance: 0 mm						
Band	Back	Front	Top Side	Bottom Side	Right Side	Left Side
WLAN 11b/g 2.4GHz	✓	✓	✓	X	✓	✓

Note : Per KDB 447498 D01, the distance from WLAN antenna to the Bottom side > 5 cm, therefore the stand-alone in these configurations SAR are not required.

<Hand-held>

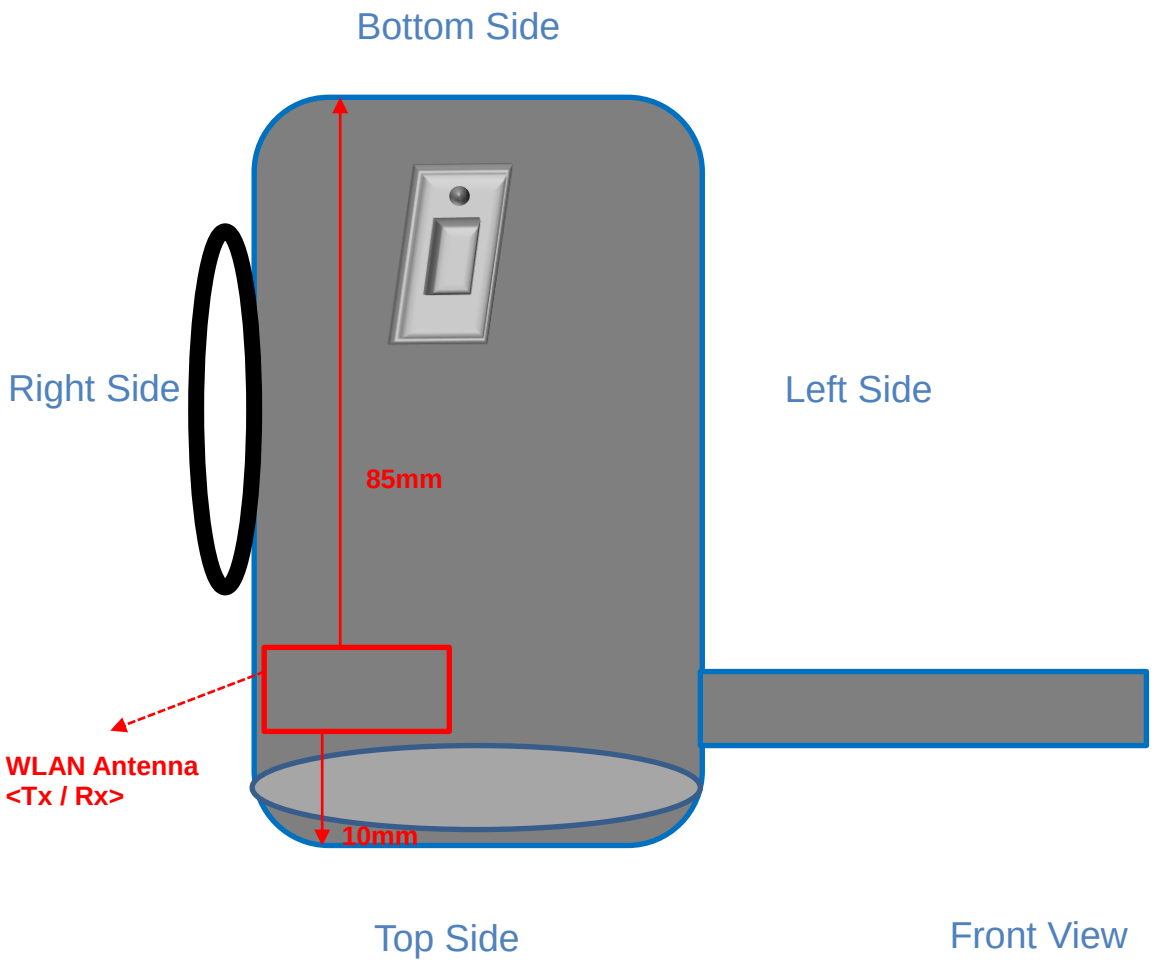

Antennas	Wireless Interface
WLAN (Tx/Rx)	802.11 b/g

Hands SAR Test distance: 0 mm						
Band	Back	Front	Top Side	Bottom Side	Right Side	Left Side
WLAN 11b/g 2.4GHz	✓	✓	x	x	✓	x

10.2 Conducted RF Output Power (Unit: dBm)

WLAN 2.4G 802.11b Average Power (dBm)						
Power vs. Channel			Power vs. Data Rate			
Channel	Frequency (MHz)	Data Rate (bps)	Channel	Data Rate (bps)		
		1M		2M	5.5M	11M
CH 01	2412	16.45	CH 06	17.33	17.35	17.31
CH 06	2437	**17.36**				
CH 11	2462	16.42				

WLAN 2.4G 802.11g Average Power (dBm)										
Power vs. Channel			Power vs. Data Rate							
Channel	Frequency (MHz)	Data Rate (bps)	Channel	Data Rate (bps)						
		6M		9M	12M	18M	24M	36M	48M	54M
CH 01	2412	13.39	CH 06	17.12	17.38	17.35	17.25	17.28	17.26	17.23
CH 06	2437	**17.50**								
CH 11	2462	12.33								

Note:

1. Per KDB 248227, choose the highest output power channel to test SAR and determine further SAR exclusion
2. Per KDB 248227, 11g output power is less than 1/4 dB higher than 11b mode, thus the SAR can be excluded.
3. For each frequency band, testing at higher data rates and higher order modulations is not required when the maximum average output power for each of these configurations is less than 1/4 dB higher than those measured at the lowest data rate.

11. SAR Test Results

11.1 Test Records for Body SAR Test

Plot No.	Band	Mode	Test Position	Gap (cm)	Ch.	Freq. (MHz)	Display Angle	Power Drift (dB)	SAR_{1g} (W/kg)
1	WLAN2.4G	802.11b	Front	0	6	2437	0	0.19	0.16
2	WLAN2.4G	802.11b	Back	0	6	2437	0	0.12	0.091
3	**WLAN2.4G**	**802.11b**	**Left Side**	**0**	**6**	**2437**	0	**0.17**	**0.226**
4	WLAN2.4G	802.11b	Right Side	0	6	2437	0	0.14	0.215
5	WLAN2.4G	802.11b	Top Side	0	6	2437	0	0.19	0.147

11.2 Test Records for Hand-held SAR Test

7	WLAN2.4G	802.11b	Front	0	6	2437	90	0.14	0.131
8	WLAN2.4G	802.11b	Back	0	6	2437	90	0.12	0.109
9	**WLAN2.4G**	**802.11b**	**Right Side**	**0**	**6**	**2437**	90	**0.18**	**0.214**

Note: 1. Per KDB 447498, if the highest output channel SAR for each exposure position ≤ 0.8 W/kg other channels SAR tests are not necessary.

2. There is no simultaneous transmission on this product, therefore simultaneous SAR analysis is not required.

Test Engineer： Bevis Chang and San Lin

12. Uncertainty Assessment

The component of uncertainly may generally be categorized according to the methods used to evaluate them. The evaluation of uncertainly by the statistical analysis of a series of observations is termed a Type An evaluation of uncertainty. The evaluation of uncertainty by means other than the statistical analysis of a series of observation is termed a Type B evaluation of uncertainty. Each component of uncertainty, however evaluated, is represented by an estimated standard deviation, termed standard uncertainty, which is determined by the positive square root of the estimated variance.

A Type A evaluation of standard uncertainty may be based on any valid statistical method for treating data. This includes calculating the standard deviation of the mean of a series of independent observations; using the method of least squares to fit a curve to the data in order to estimate the parameter of the curve and their standard deviations; or carrying out an analysis of variance in order to identify and quantify random effects in certain kinds of measurement.

A type B evaluation of standard uncertainty is typically based on scientific judgment using all of the relevant information available. These may include previous measurement data, experience, and knowledge of the behavior and properties of relevant materials and instruments, manufacture's specification, data provided in calibration reports and uncertainties assigned to reference data taken from handbooks. Broadly speaking, the uncertainty is either obtained from an outdoor source or obtained from an assumed distribution, such as the normal distribution, rectangular or triangular distributions indicated in Table 12.1

Uncertainty Distributions	Normal	Rectangular	Triangular	U-Shape
Multi-plying Factor[(a)]	1/k[(b)]	$1/\sqrt{3}$	$1/\sqrt{6}$	$1/\sqrt{2}$

(a) standard uncertainty is determined as the product of the multiplying factor and the estimated range of variations in the measured quantity

(b) κ is the coverage factor

Table 12.1 Standard Uncertainty for Assumed Distribution

The combined standard uncertainty of the measurement result represents the estimated standard deviation of the result. It is obtained by combining the individual standard uncertainties of both Type A and Type B evaluation using the usual "root-sum-squares" (RSS) methods of combining standard deviations by taking the positive square root of the estimated variances.

Expanded uncertainty is a measure of uncertainty that defines an interval about the measurement result within which the measured value is confidently believed to lie. It is obtained by multiplying the combined standard uncertainty by a coverage factor. Typically, the coverage factor ranges from 2 to 3. Using a coverage factor allows the true value of a measured quantity to be specified with a defined probability within the specified uncertainty range. For purpose of this document, a coverage factor two is used, which corresponds to confidence interval of about 95 %. The DASY uncertainty Budget is shown in the following tables:

Error Description	Uncertainty Value (±%)	Probability Distribution	Divisor	Ci (1g)	Ci (10g)	Standard Uncertainty (1g)	Standard Uncertainty (10g)
Measurement System							
Probe Calibration	6.0	Normal	1	1	1	± 6.0 %	± 6.0 %
Axial Isotropy	4.7	Rectangular	√3	0.7	0.7	± 1.9 %	± 1.9 %
Hemispherical Isotropy	9.6	Rectangular	√3	0.7	0.7	± 3.9 %	± 3.9 %
Boundary Effects	1.0	Rectangular	√3	1	1	± 0.6 %	± 0.6 %
Linearity	4.7	Rectangular	√3	1	1	± 2.7 %	± 2.7 %
System Detection Limits	1.0	Rectangular	√3	1	1	± 0.6 %	± 0.6 %
Readout Electronics	0.3	Normal	1	1	1	± 0.3 %	± 0.3 %
Response Time	0.8	Rectangular	√3	1	1	± 0.5 %	± 0.5 %
Integration Time	2.6	Rectangular	√3	1	1	± 1.5 %	± 1.5 %
RF Ambient Noise	3.0	Rectangular	√3	1	1	± 1.7 %	± 1.7 %
RF Ambient Reflections	3.0	Rectangular	√3	1	1	± 1.7 %	± 1.7 %
Probe Positioner	0.4	Rectangular	√3	1	1	± 0.2 %	± 0.2 %
Probe Positioning	2.9	Rectangular	√3	1	1	± 1.7 %	± 1.7 %
Max. SAR Eval.	1.0	Rectangular	√3	1	1	± 0.6 %	± 0.6 %
Test Sample Related							
Device Positioning	2.9	Normal	1	1	1	± 2.9 %	± 2.9 %
Device Holder	3.6	Normal	1	1	1	± 3.6 %	± 3.6 %
Power Drift	5.0	Rectangular	√3	1	1	± 2.9 %	± 2.9 %
Phantom and Setup							
Phantom Uncertainty	4.0	Rectangular	√3	1	1	± 2.3 %	± 2.3 %
Liquid Conductivity (Target)	5.0	Rectangular	√3	0.64	0.43	± 1.8 %	± 1.2 %
Liquid Conductivity (Meas.)	2.5	Normal	1	0.64	0.43	± 1.6 %	± 1.1 %
Liquid Permittivity (Target)	5.0	Rectangular	√3	0.6	0.49	± 1.7 %	± 1.4 %
Liquid Permittivity (Meas.)	2.5	Normal	1	0.6	0.49	± 1.5 %	± 1.2 %
Combined Standard Uncertainty						± 11.0 %	± 10.8 %
Coverage Factor for 95 %						K=2	
Expanded Uncertainty						**± 22.0 %**	**± 21.5 %**

Table 12.2 Uncertainty Budget of DASY for frequency range 300 MHz to 3 GHz

13. References

[1] FCC 47 CFR Part 2 “Frequency Allocations and Radio Treaty Matters; General Rules and Regulations”

[2] ANSI/IEEE Std. C95.1-1992, “IEEE Standard for Safety Levels with Respect to Human Exposure to Radio Frequency Electromagnetic Fields, 3 kHz to 300 GHz”, September 1992

[3] IEEE Std. 1528-2003, “Recommended Practice for Determining the Peak Spatial-Average Specific Absorption Rate (SAR) in the Human Head from Wireless Communications Devices: Measurement Techniques”, December 2003

[4] FCC OET Bulletin 65 (Edition 97-01) Supplement C (Edition 01-01), “Evaluating Compliance with FCC Guidelines for Human Exposure to Radiofrequency Electromagnetic Fields”, June 2001

[5] SPEAG DASY System Handbook

[6] FCC KDB 248227 D01 v01r02, “SAR Measurement Procedures for 802.11 a/b/g Transmitters”, May 2007

[7] FCC KDB 447498 D01 v04, “Mobile and Portable Device RF Exposure Procedures and Equipment Authorization Policies”, November 2009

[8] FCC KDB 941225 D06 v01, "SAR Evaluation Procedures for Portable Devices with Wireless Router Capabilities", April 2011

[9] FCC KDB 941225 D07 01, "SAR Evaluation Procedure for UMPC Mini-Tablet Devices", April 2011

Appendix A. Plots of System Performance Check

The plots are shown as follows.

Appendix B. Plots of SAR Measurement

The plots are shown as follows.

Appendix C. DASY Calibration Certificate

The DASY calibration certificates are shown as follows.