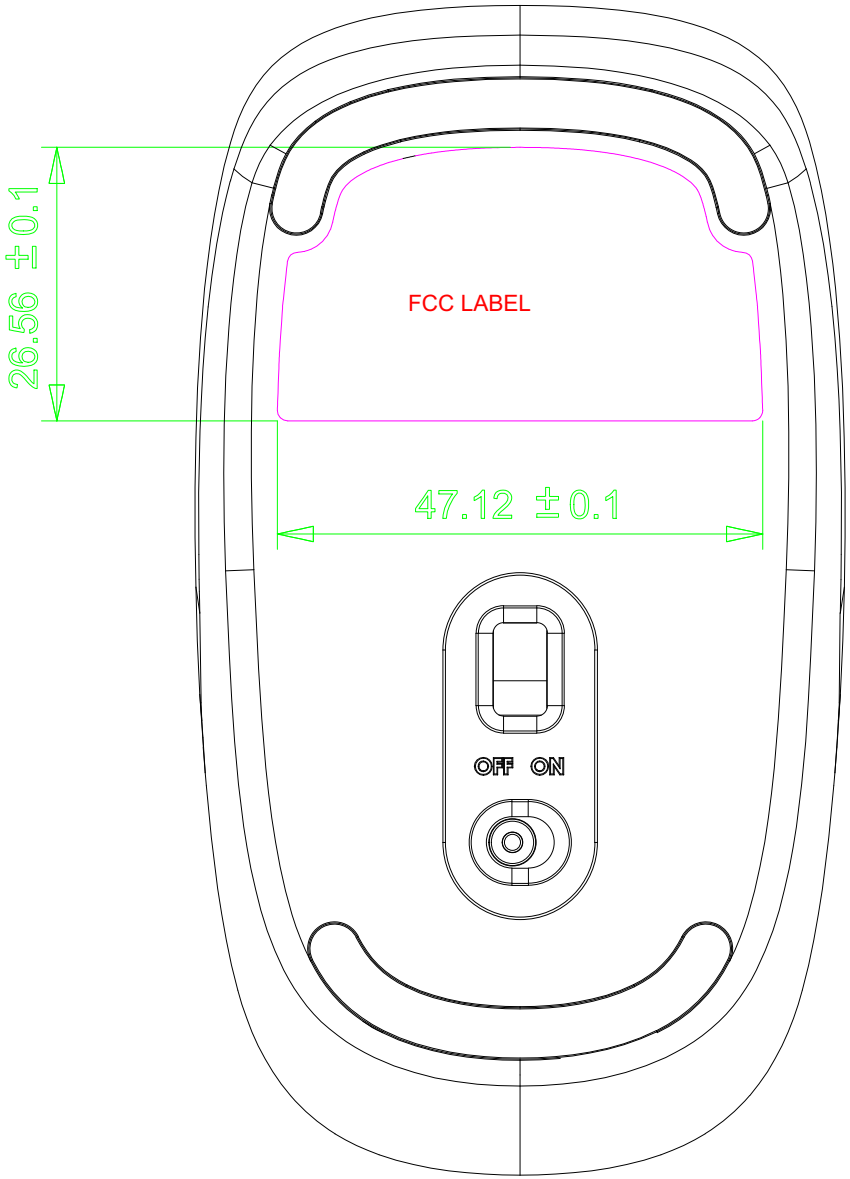
26.56 ±0.1
FCC LABEL
47.12 ±0.1
OFF ON

REV LTR	DATE	REV. DIMENSION	DESIGN	APPROVE
B				
C				

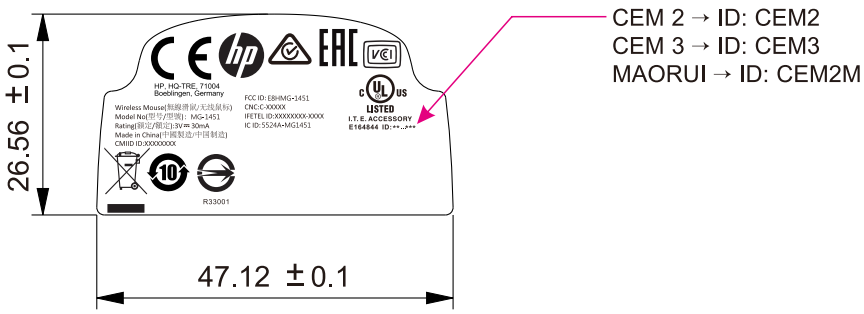

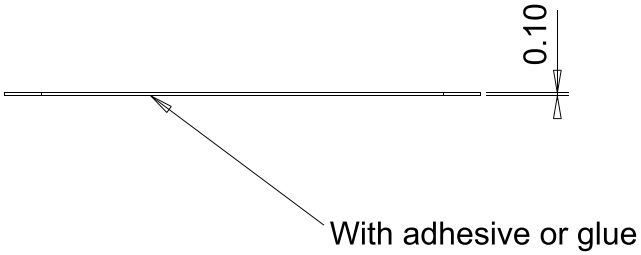

REFERENCE ONLY

NOTES:

1. MATERIAL: PET t=0.1mm (WITH GLUE)
   (UL/CSA APPROVED)
2. BACKGROUND COLOR: TRANSPARENT
3. TEXT & SYMBOLS COLOR: PANTONE Cool Gray 7C
4. THE PRODUCT AND COMPONENT NEED COMPLY WITH HP GSE
   (GENERAL SPECIFICATION FOR THE ENVIRONMENT)
   AND HP ROHS 2 COMPLIANCE SPEC BOTH LATEST REVISION.

MG-1451	253-01451L-	HP
MODEL NO.	PART NO.	REMARK

CHICONY ELECTRONICS CO.,LTD

APPROVED	CHECKED	DESIGNED
WADE	MICHELLE	TAMMY
12/31-'14	12/31-'14	12/31-'14

MAT.: NOTES

SPEC: NOTES

FINISH: NOTES

TOL: | Q'TY | SIZE: A4

SCALE: 1 : 1 | UNIT: MM

MODEL NO.: MG-1451

NAME: (FOR MOUSE) SPEC. ID LABEL(A)

DWG NO.: MG1451-FCC(A)-X6