REV LTR	DATE	REV . DIMENSION	DESIGN	APPROVE
A				
B				

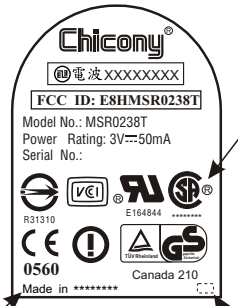

CET → LR94275
CEM 2 → LR114370
CEM 3 → 156913

VENDER UL MARK.

CET → Made in Thailand
CEM → Made in China

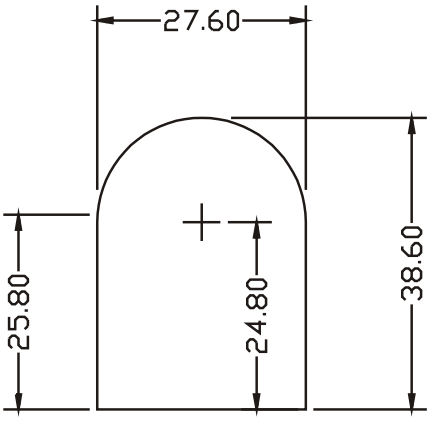

NOTES:

1. MATERIAL: SYNTHETIC PAPER t=0.15mm (WITH GLUE) (UL/CSA APPROVED)
2. BACKGROUND COLOR: WHITE
3. CHARACTER COLOR: PANTONE Process Black C
4. FINISHED: ADHESIVE. (SONY NP303)
5. LABEL VENDOR HAS TO BE APPRD. BY UL/CSA.

MODEL NO.	PART NO.	REMARK
MSR0238...	253-00238-00	CHICONY

CHICONY ELECTRONICS CO.,LTD

APPROVED	CHECKED	DESIGNED
		TAMMY
		08/30-'02

MAT.: NOTES

SPEC: NOTES

FINISH: NOTES

TOL: | Q'TY | SIZE: A4

SCALE: 1 : 1 | UNIT: MM

MODEL NO.: MSR0238...

NAME: (FOR MOUSE) SPEC. ID LABEL

DWG NO.: MSR0238T-FCC | REV: 0