PRINTER'S INSTRUCTIONS:

GUIDE, QUICK INSTALL, ELAN ITP-12 - P/N: 10023156 Rev-C - INK: BLACK - MATERIAL: 80# TEXT - GLOSS - SIZE: 4.125" X 5.75" - SCALE: 1-1 - MUST BE ROHS COMPLIANT - BINDING: SADDLE STITCH

ELAN®

12" Interactive Touch Panel

User Interface

Quick Install Guide

ITP-12

Thank you for including the ITP-12 as part of the user interface strategy for your customer. The ITP-12 has been designed to provide years of trouble free operation when wired and installed properly. The ITP-12 has been designed for installation in low humidity indoor environments and should never be installed outdoors or in high humidity areas.

Included in the box:

- 1ea ITP-12 touch panel
- 1ea ITP-12 mounting bracket
- 1ea panel removal key
- 4ea mounting screws
- 1ea DC power connector

To install the ITP-12 you will need a standard 2-gang US junction box or low voltage bracket (not included).

SPECIFICATIONS

Dimensions	
Overall	11.68 w x 7.25 h (in) / 29.67 w x 18.40 h (cm)
Mounting Depth	1 (in) / 2.54 (cm)
Audio	
Microphone	Dual Digital MEMS Microphone-Array
Speaker	Stereo Micro Speakers (2)
Video	
Camera	5 MP CMOS sensor
Display	12” / 1920 x 1080
Connections	
LAN/PoE	RJ45
Power	2-pin Phoenix
USB	Type A
Power Requirements	
Direct	12V 1A
PoE	12V 1A PoE – IEEE 802.3at, 13W maximum draw (@48V 270mA max)
Network	10/100 Ethernet 802.11 B/G/N WiFi

IMPORTANT SAFETY INSTRUCTIONS:

1. Read these instructions.
2. Keep these instructions.
3. Heed all warnings.
4. Follow all instructions.
5. Do not use this apparatus near water.
6. Clean only with dry cloth.
7. Install in accordance with the manufacturer’s instructions.
8. Do not install near any heat sources such as radiators, heat registers, stoves or other apparatus (including amplifiers) that produce heat.
9. Only use attachments/accessories specified by the manufacturer.
10. Unplug this apparatus during lightning storms or when unused for long periods of time.
11. Refer all servicing to qualified service personnel. Servicing is required when the apparatus has been damaged in any way such as power-supply cord or plug is damaged, liquid has been spilled or objects have fallen into the apparatus, the apparatus has been exposed to rain or moisture, does not operate normally, or has been dropped.

FCC AND IC INFORMATION:

This Class B digital apparatus complies with Part 15 of the FCC rules and with Canadian ICES-003 and RSS-247.

Operation is subject to the following two conditions:

1. This device may not cause interference and
2. This device must accept any interference, including interference that may cause undesired operation of the device.

NOTE: This equipment has been tested and found to comply with the limits for a Class B digital device, pursuant to Part 15 of the Federal Communications Commission (FCC) rules. These limits are designed to provide reasonable protection against harmful interference in a residential installation. This equipment generates, uses and can radiate radio frequency energy and, if not installed and used in accordance with the instructions, may cause harmful interference to radio communications. However, there is no guarantee that interference will not occur in a particular installation. If this equipment does cause harmful interference to radio or television reception, which can be determined by turning the equipment off and on, the user is encouraged to try to correct the interference by one or more of the following measures:

- Reorient or relocate the receiving antenna.
- Increase the separation between the equipment and receiver.
- Connect the equipment into an outlet on a circuit different from that to which the receiver is connected.
- Consult the dealer or an experienced radio/TV technician for help.

Le présent appareil est conforme aux CNR d’Industrie Canada applicables aux appareils radio exempts de licence. L’exploitation est autorisée aux deux conditions suivantes : (1) l’appareil ne doit pas produire de brouillage, et (2) l’utilisateur de l’appareil doit accepter tout brouillage radioélectrique subi, même si le brouillage est susceptible d’en compromettre le fonctionnement.

FCC AND IC REGISTRATIONS:

FCC ID: EF400230	802.11 B/G/N WIFI	Max Power 18dBm
IC ID: 1078A-00230	Bluetooth V5.2	Max Power 9dBm
HVIN: ITP-12B	Frequency	2.4GHz
CAN ICES-003 (B) / NMB-003 (B)		

WARNING:

Changes or modifications to this unit not expressly approved by the party responsible for compliance could void the user's authority to operate the equipment.

FCC AND IC RADIATION EXPOSURE STATEMENT:

This equipment complies with FCC radiation exposure limits set forth for an uncontrolled environment and meets the exemption from the routine evaluation limits in section 2.5 of RSS 102.

1. This Transmitter must not be co-located or operating in conjunction with any other antenna or transmitter.
2. This equipment complies with FCC RF radiation exposure limits set forth for an uncontrolled environment.

FCC/IC RF RADIATION EXPOSURE STATEMENT:

Caution:
This Transmitter must be installed to provide separation distance of at least 20cm from all persons.

FCC / IC RF Radiation Déclaration d'exposition

Attention:
Cet émetteur doit être installé pour fournir une distance de séparation d'au moins 20 cm de toute personne.

WARNING:

The device meets the exemption from the routine evaluation limits in section 2.5 of RSS 102, and users can obtain Canadian information on RF exposure and compliance from the Canadian Representative Product Solutions Group at Tel: (519) 763-4538.

SIMPLIFIED EU DECLARATION OF CONFORMITY

Hereby, Nortek Security & Control LLC declares that the radio equipment type ITP-12 is in compliance with Directive 2014/53/EU. The full text of the EU declaration of conformity is available at the following internet address:

http://resources.nortekcontrol.com/products/EL-ITP-12-WH/Declaration_of_Conformity_Elan_ITP-12.pdf

ITP-12 OVERVIEW

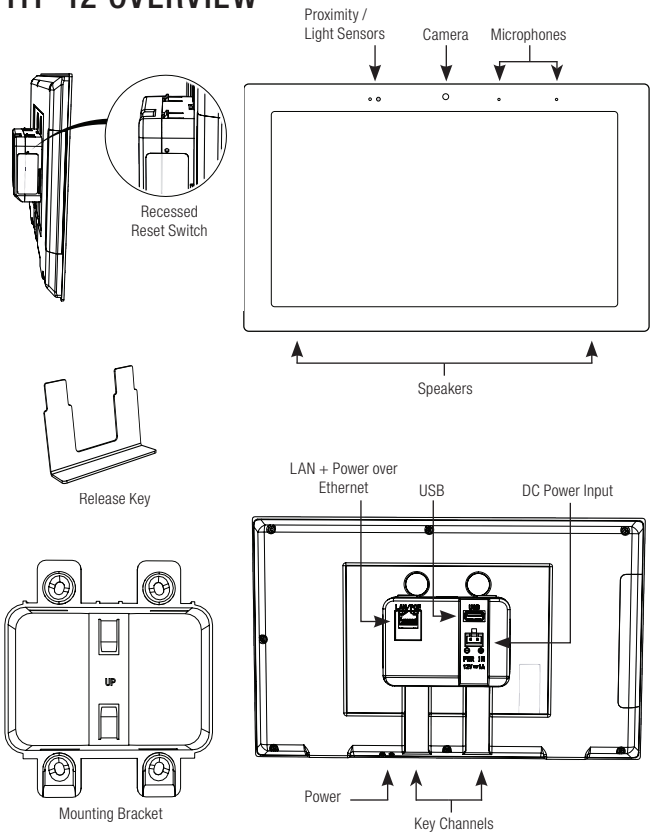

PLANNING THE INSTALLATION

The ITP-12 is designed to wall mount in either Portrait or Landscape orientation. Ensure there is adequate wall space for the ITP-12 and that the surface is relatively smooth.

The ITP-12 requires a minimum mounting depth of 1¾" (4.5 cm) from the front surface plus room for wire. Ensure that adequate depth is available.

Power may be supplied by Power Over Ethernet (PoE) or by a 12V DC power supply (not included). PoE must meet the IEEE 802.3af standard. Direct power via a 12V DC external power supply requires a minimum current output of 1A.

The ITP-12 connects to the local network via Ethernet or Wi-Fi. When using Wi-Fi you must ensure that there is adequate Wi-Fi coverage at the mounting location.

1

Installing the ITP-12

a. Mounting Height

Depending on how tall your homeowner is, it is recommended to locate the center of the panel between 57"- 65" (145 cm -165 cm) above the finished floor.

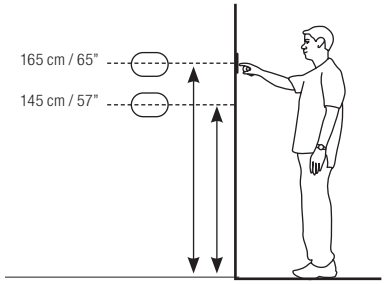

b. Mounting Bracket

The ITP-12 has been designed to mount to a US standard 2 gang box or low voltage bracket.

The ITP-12 bracket mounts to the standard 2 gang box and the ITP-12 snaps into the ITP-12 bracket.

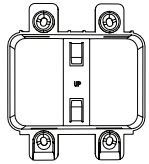

Mounting Bracket

New Construction Box

Retrofit Box

New Construction Low Voltage Bracket

Retrofit Low Voltage Bracket

c. Landscape Mounting

Install the 2 gang box or bracket in it's normal orientation – with mounting screw holes at the top and bottom.

2 Gang Box

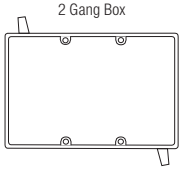

d. Portrait Mounting

Install the 2 gang box or bracket rotated 90° - with the mounting screw holes on the left and right sides.

2 Gang Box

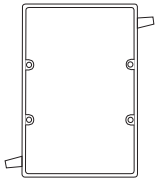

e. Installing the ITP-12 Bracket

The ITP-12 includes a mounting bracket that must be used. Using the included screws, mount the bracket to a standard 2 gang electrical box or low voltage bracket and verify that the bracket is level before tightening the screws.

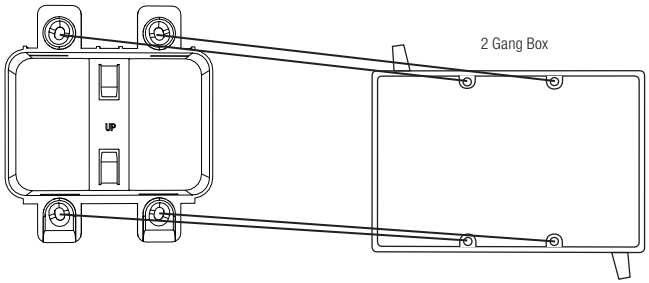

f. Connecting the ITP-12 to Power

The ITP-12 is designed to be powered over the Ethernet connection (PoE) or by connecting a 12V DC power supply (not included), but not both. If both the PoE and a 12V DC power supply are connected the ITP-12 will draw power from the 12V DC source.

PoE Connection

PoE connection requires that IEEE 802.3af standard (13W maximum draw @48 V DC @270 mA) is met. Use a network switch or PoE injector that meets this standard.

Connect the ITP-12 using a standard T568A or T568B Ethernet cable from the network switch to the LAN/PoE jack. If you have terminated your own CAT 5e/6/7 cable use a tester to ensure that both ends have been properly terminated.

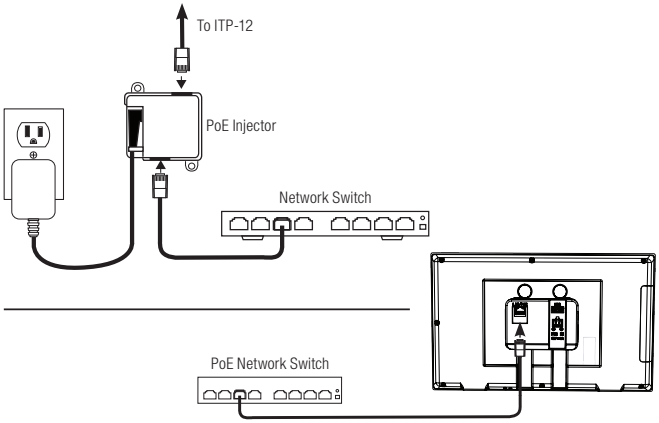

12V DC Power Supply

By using a 12V DC power supply (not included) to power the ITP-12 you can provide power locally or remotely. If powering locally, be sure to run the wire through the wall in accordance with local building and electrical codes. If powering remotely, be sure to use wire of adequate gauge for the length of the run.

Verify the polarity of your power supply prior to termination and ensure the power supply is not connected to a power source.

Strip approx. ¼" of insulation from the wire, and observing the correct polarity, terminate the wire into the supplied connector and tighten firmly. Be sure to twist the wires before inserting so that no strands escape the connector. Inspect the termination to verify that the wire is securely retained by the connector and no strands have escaped the barrier.

Plug the connector into the ITP-12.

g. Connecting Ethernet

When not using PoE, and you have a physical network connection available it is recommended that you connect the ITP-12 directly to the network switch.

Using a T568A or T568B network cable, connect to the LAN/PoE jack.

If you have terminated your own CAT 5e/6/7 cable use a tester to ensure that both ends have been properly terminated.

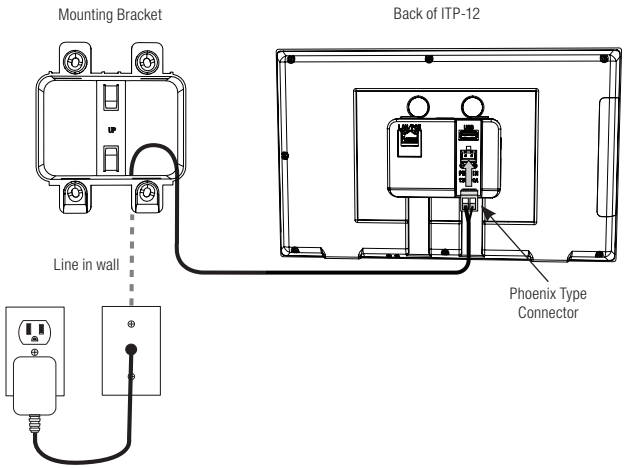

h. Mounting the ITP-12

The ITP-12 is held into the mounting bracket by with tabs on the rear of the panel.

Orient the panel with the camera, microphones, and sensors button at the top for landscape mounting, or the right side for portrait mounting.

To complete the installation simply grasp the ITP-12 on the edges and press firmly on to the bracket until it is settled.

CAUTION: DO NOT PRESS DIRECTLY ON THE SCREEN
When installing on to the mounting bracket. Press only on the frame and take care not to use too much force.

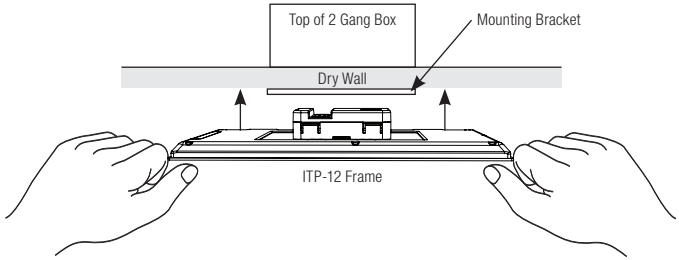

2

Powering up the ITP-12

Apply power (12V DC or PoE) and wait for the unit to boot up.

If connected to a wired Ethernet switch the ITP-12 will acquire a network address via DHCP and automatically connect to the system.

If the ITP-12 does not detect a wired Ethernet connection and the WiFi radio has not been configured, you will need to set up the wireless connection. In the setup menu select the wireless connection and follow the on screen instructions to set up the wireless connection. For wireless setup, see Section 3 - Startup Settings.

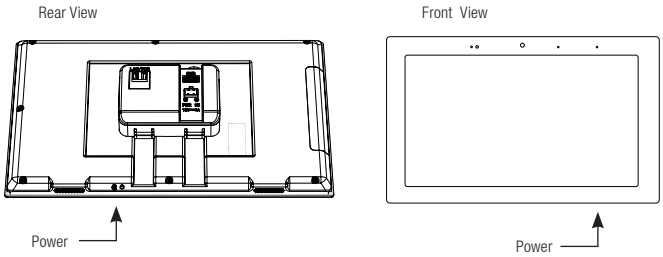

3

Startup Settings

After applying power to the ITP-12, un-check the Auto Start check-box then tap the Configure button.

From here, you will see the Startup options:

a. Configure WiFi

To use WiFi, check the Enable WiFi box, select the SSID and enter the password.

b. Orientation Setup

Configure whether the panel will be installed in portrait or landscape mode.
Note: The ITP-12 is optimized for use in landscape mode.

c. Camera Enable / Disable

The ITP-12 camera can be enable or disabled. When disabled, the panel will not transmit video but can still be used for face recognition.

d. Proximity Sensor Sensitivity

Adjust the sensitivity of the proximity sensor for waking up the panel.

e. Controller Binding

If more than one controller is used on the same network, specify which controller the ITP-12 should be assigned to.

4

Reset

The recessed RESET button has two functions.
Press and hold the button for 3 seconds to reset the panel settings.

With the unit powered off, press and hold the button then power the unit on to reset to the factory default configuration.

CAUTION: Neither of these actions can be reversed.

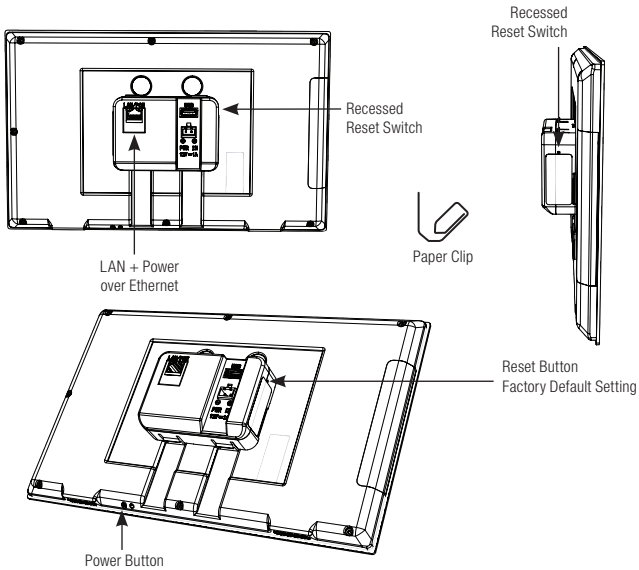

5

Removing the ITP-12

Slide the removal key behind the panel taking care to insert in the key channels on the rear of the panel and avoid making contact with the wall. Press up on the removal key to release the locking tabs. Once unlocked, pull the bottom of the panel away from the wall, then pull out.

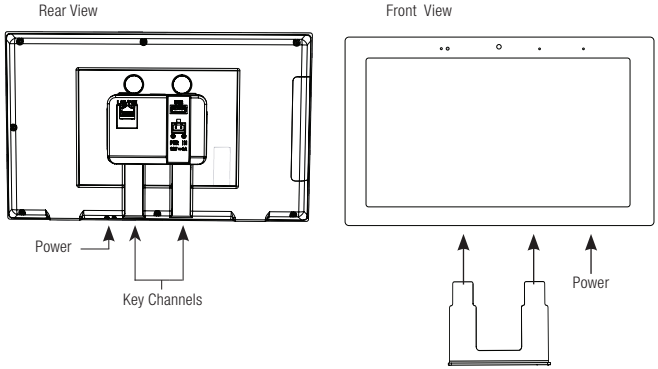

LIMITED WARRANTY

Nortek Security & Control ('NSC') warrants the ITP-12 to be free from defects in materials and workmanship for the period of two years (2 years) from the date of purchase. If within the applicable warranty period above purchaser discovers that such item was not as warranted above and promptly notifies 'NSC' in writing, 'NSC' shall repair or replace the item at the company's option. This warranty shall not apply (a) to equipment not manufactured by 'NSC', (b) to equipment which shall have been installed by other than an 'NSC' authorized installer, (c) to installed equipment which is not installed to 'NSC's' specifications, (d) to equipment which shall have been repaired or altered by others than 'NSC', (e) to equipment which shall have been subjected to negligence, accident, or damage by circumstances beyond 'NSC's' control, including, but not limited to, lightning, flood, electrical surge, tornado, earthquake, or other catastrophic events beyond 'NSC's' control, or to improper operation, maintenance or storage, or to other than normal use of service. With respect to equipment sold by, but not manufactured by 'NSC', the warranty obligations of 'NSC' shall in all respects conform to the warranty actually extended to 'NSC' by its supplier. The foregoing warranties do not cover reimbursement for labor, transportation, removal, installation or other expenses which may be incurred in connection with repair or replacement. Except as may be expressly provided and authorized in writing by 'NSC', 'NSC' shall not be subject to any other obligations or liabilities whatsoever with respect to equipment manufactured by 'NSC' or services rendered by 'NSC'.

THE FOREGOING WARRANTIES ARE EXCLUSIVE AND IN LIEU OF ALL OTHER EXPRESSED AND IMPLIED WARRANTIES EXCEPT WARRANTIES OF TITLE, INCLUDING BUT NOT LIMITED TO IMPLIED WARRANTIES OF MERCHANTABILITY AND FITNESS FOR A PARTICULAR PURPOSE.

ATTENTION: TO OUR VALUED CUSTOMERS

To ensure that customers obtain quality pre-sale and after-sale support and service, Nortek Security & Control products are sold exclusively through authorized dealers. Nortek Security & Control products are not sold online. The warranties on Nortek Security & Control products are NOT VALID if the products have been purchased from an unauthorized dealer or an online E-tailer. To determine if your Nortek Security & Control reseller is authorized, please call Nortek Security & Control at (707) 283-5900.

main:
1 (800) 472-5555 - US
1 (707) 283-5900 - International
1 (707) 283-5901 - Fax

tech support:
techsupport@elancontrolsystems.com

web:
elancontrolsystems.com

NORTEK CONTROL

©2022 Nortek Security & Control LLC. ELAN® is a registered trademark of Nortek Security & Control LLC. Other brand names and products names mentioned herein may be the trademarks, tradenames, services marks or registered trademarks of their respective owners. All rights reserved.

10023156 Rev-C