PRINTER'S INSTRUCTIONS:
INSTR,HOMEOWNERS,LINEAR661 P/N: 10033066 Rev-X7; INK: BLACK; MATERIAL: 20 MEAD BOND WHT PAPER; SIZE: 8.5.000" x 11.000"; SCALE: 1-1; FOLD: SADDLE STITCH

LINEAR™
a **Nice** brand

661

Nice G.O.

Nice G.O.
Smart
Connected

Smart Garage Door Operator

EN - User Guide

Nice

LINEAR™
a **Nice** brand

TABLE OF CONTENTS

Important Safety Notes 3
For Residential Sectional Type Doors Only 3
Important Installation Safety Instructions 3
Using the Garage Door Operator 4
Opening the Door 4
Closing the Door 4
Stopping the Door Mid-travel 4
Vacation Lock for Additional Security 5
Controlling the Light Panel 5
Disconnecting the Door from the Operator 5
Adjusting the Open and Close Limits 6
Adjusting the Open Limit 6
Adjusting the Close Limit 6
Automatic Door Force Setup 6
Safety Reversal System Test 7
Adjusting the Force Factor (Installation Option, Normally Not Used) 7
Changing the Force Factor Setting 7
Remote Controls 8
To Add or Remove a Remote Control 8
To Remove All Remote Control and Keypads 8
Testing 9
Replacing a Remote Control's Batteries 9
Programming Wireless Keypad Codes 10
To Add or Remove a Wireless Keypad Code 10
Replacing the Keypad's Batteries 10
Nice G.O. Homeowner Smartphone App Installation 10
Download, Register and Activate Application 10
Connect your Opener to the Nice G.O. app 10
Test Wi-Fi Signal Strength with Your Smart Phone 11
LEDs on the Wall Station 11
Garage Door Operator Maintenance 12
Aligning the Infrared Safety Beam 12
Safety Beam 12
Checking for Reversal 13
Checking Forced Closure Feature 13
After Servicing the Operator 13
Every 6 Months 13
Chain Adjustment 14
Belt Adjustment 14
Disconnect the Operator 14
Field Reset 14
Troubleshooting 15
FCC Notice 15
Limited Warranty 15

Important Safety Notes

For Residential Sectional Type Doors Only

Please read the instructions carefully! This garage door operator is designed to provide safe and reliable service if installed and tested as described in these instructions. A garage door is the largest mechanical appliance in a residence. Care must be taken to prevent injury or death during installation and operation of the garage door and garage door operator.

⚠ WARNING ⚠

This type of warning note is used to indicate possible mechanical hazards that may cause serious injuries or death.

⚠ WARNING ⚠

This type of warning note is used to indicate possible electrical shock hazards that may cause serious injuries or death.

⚠ CAUTION ⚠

This type of warning note is used to indicate the possibility of damage to the garage door or garage door operator.

THE FOLLOWING FORMATS ARE USED FOR SAFETY NOTES IN THESE INSTRUCTIONS.

Important Installation Safety Instructions

⚠ WARNING ⚠

TO REDUCE THE RISK OF SEVERE INJURY OR DEATH TO PERSONS, REVIEW THESE INSTALLATION SAFETY STEPS BEFORE PROCEEDING

1. READ AND FOLLOW ALL INSTALLATION INSTRUCTIONS.
2. Install only on a properly balanced sectional garage door. An improperly balanced door could result in severe injury or death. Repairs to cables, spring assemblies, and other hardware must be made by a qualified service person before installing the opener.
3. Disable all locks and remove all ropes connected to the garage door before installing the opener. Ropes connected to a garage door can cause entanglement and death.
4. If possible, install door opener 7 feet or more above the floor with the manual release handle mounted 6 feet above the floor.
5. Do not connect the opener to the power source until instructed to do so.
6. Locate the wall station or push button within sight of the door at a minimum height of 5 feet so that small children cannot reach it. Locate the wall station or push button away from all moving parts of the door.
7. Install the User Safety Label on the wall adjacent to the wall station or push button.
8. Upon completion of the installation, the door must reverse when it comes in contact with a 1-1/2” high object (or a 2x4 laid flat at the center of the door) on the floor and when the infrared safety beam is blocked.
9. Do not wear watches, rings or loose clothing while installing or servicing an opener. Jewelry or loose clothing can be caught in the mechanism of the garage door or the opener.
10. DISCONNECT THE ELECTRIC POWER AND BATTERY CONNECTION FROM THE GARAGE DOOR OPENER BEFORE MAKING ANY REPAIRS OR REMOVING THE COVER.
11. Disconnecting the Door from the Opener: With the door in any position (preferably closed), carefully pull the red release handle. USE CAUTION IF THE DOOR IS OPEN. An open or partially open door may fall rapidly if disconnected from the opener. Do not allow anyone in the path of the door.
12. Use this operator only with sectional overhead door no more than 8 feet tall.

Using the Garage Door Operator

IMPORTANT USER SAFETY INSTRUCTIONS

⚠ WARNING ⚠

A MOVING GARAGE DOOR CAN CAUSE INJURY OR DEATH!
TO REDUCE THE RISK OF DEATH OR SEVERE INJURY:

1. READ AND FOLLOW ALL INSTALLATION INSTRUCTIONS.
2. NEVER LET CHILDREN OPERATE, OR PLAY WITH DOOR CONTROLS! KEEP REMOTE CONTROL AWAY FROM CHILDREN!
3. Always keep moving door in sight and away from people and objects until it is completely closed. NO ONE SHOULD CROSS THE PATH OF THE MOVING DOOR.
4. NEVER GO UNDER A STOPPED, PARTIALLY OPEN DOOR.
5. Test door operator monthly. The garage door MUST reverse on contact with a 1-1/2 inch object (or a 2x4 board laid flat at the center of the door) on the floor. If adjusting either the force or the limit of travel, re-test the door operator. Failure to adjust the operator properly may cause severe injury or death.
6. If possible, use the red emergency release handle only when the door is closed. Use caution when using this release with the door open. Weak or broken springs may cause the door to fall rapidly, causing injury or death.
7. KEEP GARAGE DOORS PROPERLY BALANCED. (See Garage Door Operator Maintenance) An improperly balanced door could cause severe injury or death. Have a qualified service person make repairs to cables, spring assembly and other hardware.

8. SAVE THESE INSTRUCTIONS.

Opening the Door

a) With the door in view, press the wall station button or the button assigned to the operator on the remote control, or enter a valid access code and press START/STOP on a remote keypad.

When the operator is activated, the operator's light will turn on and the door will begin to open.

The door will open until the open limit is reached. If an obstacle is encountered (operator's light flashes four times) while the door is opening, the door will stop.

The operator's light will stay on for about five minutes after the door stops.

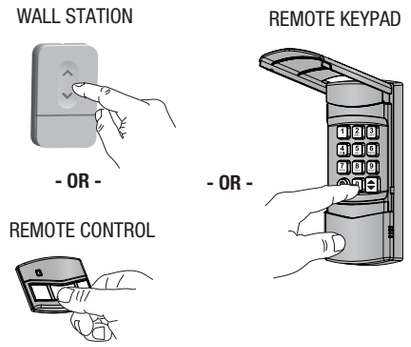

Closing the Door

a) With the door in view, press the wall station button or the button assigned to the operator on the remote control, or enter a valid access code and press START/STOP on a remote keypad.

When the operator is activated, the operator's light will turn on and the door will begin to close.

The door will close until the close limit is reached. If an obstacle is encountered (operator's light flashes four times), or the safety beam is interrupted (operator's light flashes three times) during closing, the door will stop, then re-open.

The operator's light will stay on for about five minutes after the door stops.

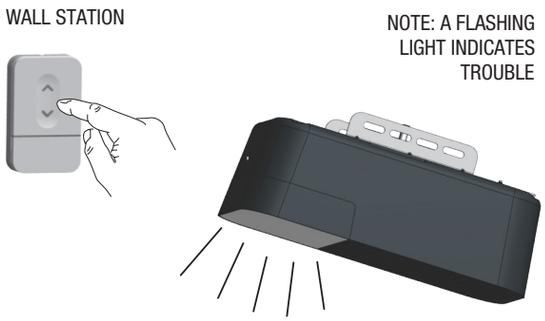

Stopping the Door Mid-travel

a) The door can be stopped immediately at any time by pressing the wall station button, the remote control's pushbutton, or press the START/STOP button on a remote keypad (if the remote keypad was used to start the door).

b) The next time the operator is activated, the door will move in the opposite direction.

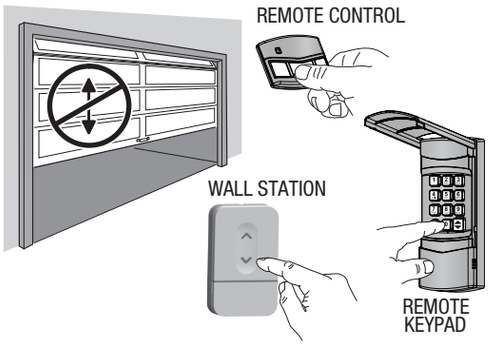

Vacation Lock for Additional Security

a) Press the Wall Station's LOCK button to prevent remote controls and keypads from opening the door after the door is completely closed. They can close the door, but not open it once closed. The door can still be opened or closed by using the wall station pushbutton or via the Nice G.O. app.

NOTE: To indicate that the Vacation Lock is enabled, the blue arrows will flash.

NOTE: If a transmitter is activated in an attempt to open the door while in vacation mode, the operator will beep and flash five times.

b) Press the Wall Station's LOCK button again to unlock and return the operator to normal operation.

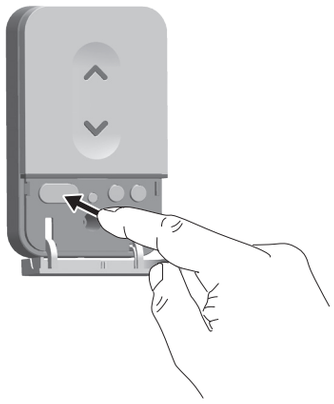

Controlling the Light Panel

a) The Light Panel can be lit by pushing the wall station's LIGHT button. The light will remain on until the LIGHT button is pressed again or the operator is cycled.

b) If the Light Panel is on, pushing the wall station's LIGHT button will turn the operator's light off.

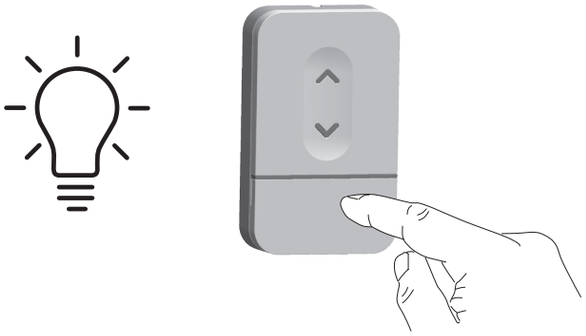

Disconnecting the Door from the Operator

a) With the door in any position (preferably closed), carefully pull the red release handle. **USE CAUTION IF THE DOOR IS OPEN, THE DOOR MAY DROP.** The disconnected door can be opened or closed manually.

b) To re-connect the operator, flip the release lever up. Raise or lower the door manually until the operator reconnects.

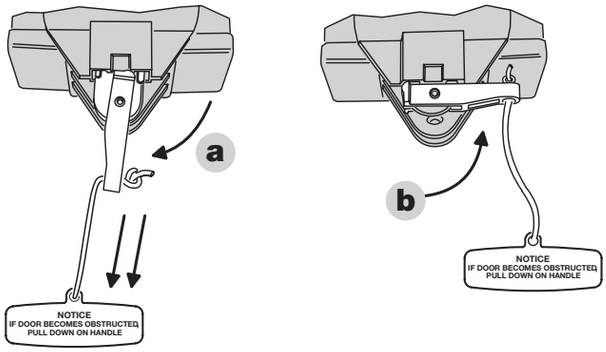

Adjusting the Open and Close Limits

The limit settings control how far the door will open and close. Set the limits so the door opens just short of any door stops, and closes at the floor level. **Out of the box, the operator is preset on its close limit and the open limit is preset for a 7-foot high door.**

Use the wall station or a transmitter to test operate the door. If required, use the following steps to adjust the limits.

⚠ CAUTION ⚠

Set the open and close limits carefully. Setting the limits beyond the distance that the door can travel could cause damage to the door, the door hardware, or operator.

Adjusting the Open Limit

a) Use the wall station or a transmitter to move the door near the desired open limit position.

b) On the operator, press both the UP and LEARN buttons for three seconds. The green indicator and operator's light will flash twice then stay on.

c) If necessary, use the UP and DOWN buttons to jog the door at slow speed to fine-tune the open limit position.

d) When the door is at the proper open limit position, press the LEARN button to store the setting and exit setup. The green indicator and the operator's light will flash two times.

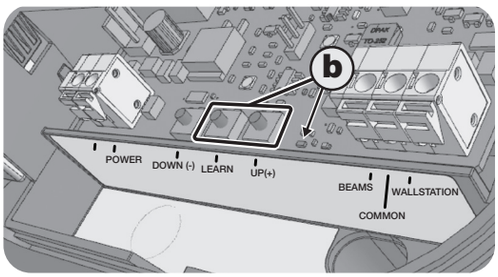

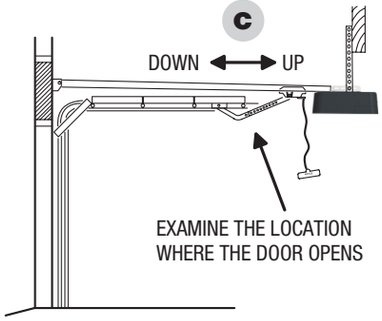

Adjusting the Close Limit

a) Use the Wall Station or a transmitter to move the door near the desired close limit position.

b) Press both the DOWN and LEARN buttons for three seconds. The red indicator and operator's light will flash twice then stay on.

c) If necessary, use the UP and DOWN buttons to jog the door at slow speed to fine-tune the close limit position.

d) When the door is at the proper close limit position, press the LEARN button to store the setting and exit setup. The red indicator and the operator's light will flash two times.

NOTE: If the operator is **Field Reset (see pg. 14)**, both the open and close limits must be adjusted and the automatic door force setup must be completed for proper operation.

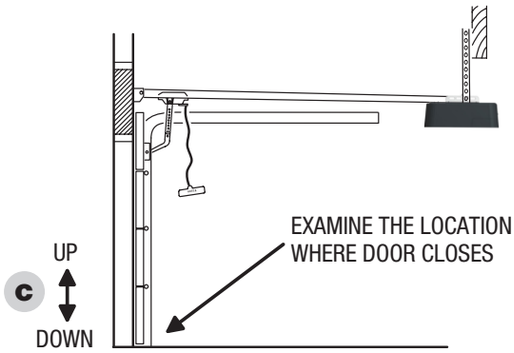

Automatic Door Force Setup

The operator automatically measures the door force throughout the entire travel of the door each time the operator cycles. The following steps are all that's required to setup the safety reversal system.

a) Be sure that the trolley latch is up, and the door is connected to the operator.

b) After limits have been set, you may begin using the operator. The learning process will be complete after the fourth cycle.

⚠ CAUTION ⚠

Do not cycle the operator full travel without the door connected. The automatic door force setting will adjust to the unloaded condition and may trip the safety system when the door is reconnected.

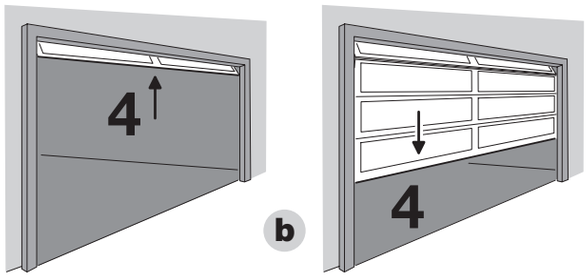

Safety Reversal System Test

The operator determines if there is an obstruction if a higher than expected amount of force is detected during a door cycle. If an obstruction is encountered during a closing cycle, the operator and door will stop then fully open. If an obstruction is encountered during an opening cycle, the operator and door will stop.

a) Lay a 2 x 4 board flat on the floor where it will be struck by the **center** of the door as it closes.

b) Verify that the door reverses when it strikes the board. The door **must** reverse within two seconds after striking the board.

⚠ WARNING ⚠

Always perform the Safety Reversal System Test after making any adjustments to the operator. PERFORM THE SAFETY REVERSAL SYSTEM TEST MONTHLY!

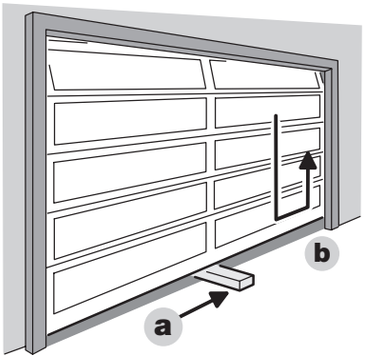

Adjusting the Force Factor (Installation Option, Normally Not Used)

The operator uses the peak force measured during each of the last four complete cycles plus a “force factor” to calculate the maximum allowed force setting for the current door cycle. If the calculated maximum force setting is exceeded during the current door cycle, the operator reacts to the obstruction. As door hardware conditions change over time with weather and wear, the calculation of the maximum door force setting using the four cycle running average will compensate for the current conditions of the installation.

The door force is preset for the lowest amount of pressure on an obstacle to detect an obstruction. THE FACTORY SETTING IS OPTIMIZED FOR MOST INSTALLATIONS.

Changing the Force Factor Setting

As an installation option, the operator’s “force factor” can be adjusted to change the amount of pressure exerted on an obstacle before the operator reacts to the obstruction.

a) Press both the UP and DOWN buttons for three seconds. The red and green indicators and operator’s light will flash twice.

b) Use the UP or DOWN buttons to set the force factor. Pressing the UP button ***increases*** the force factor, pressing the DOWN button ***decreases*** the force factor.

FORCE FACTOR INDICATOR TABLE	
GREEN ON	LOW FORCE FACTOR
RED & GREEN ON	MEDIUM FORCE FACTOR
RED ON	HIGH FORCE FACTOR

c) After selecting the force factor, press the LEARN button to store the setting and exit setup. The red and green indicators and the operator’s light will flash two times. ***(If the force factor is not set within one minute, the operator will return to normal operation at its previous force factor setting.)***

d) After changing the force factor setting, perform the Safety System Reversal Test.

Remote Controls

The operator is supplied with a three-button remote control (the second and third buttons can be used to control an additional operator or gate if it contains a Linear MegaCode™ receiver). Additional single and multi-button, remote controls, keypads, and external receivers can be purchased.

⚠ WARNING ⚠

Children operating or playing with a garage door operator can injure themselves or others. The garage door could cause serious injury or death. Do not allow children to operate the remote control(s) or the wall station. A moving garage door could injure or kill someone under it. Activate the operator only when the door is clearly visible, free of obstructions and adjusted properly.

To Add or Remove a Remote Control

a) Press the operator's LEARN button (a) located on the main circuit board. The operator's red light (b) will flash once and turn on for about 15 seconds. A remote must be added or removed while the red light is still on.

b) Send a signal from a remote.

c) The operator's red light will flash once if a remote was added, or the opener's light and the red light will flash four times if a remote was removed.

d) Repeat Steps 1 & 2 for any additional remote controls.

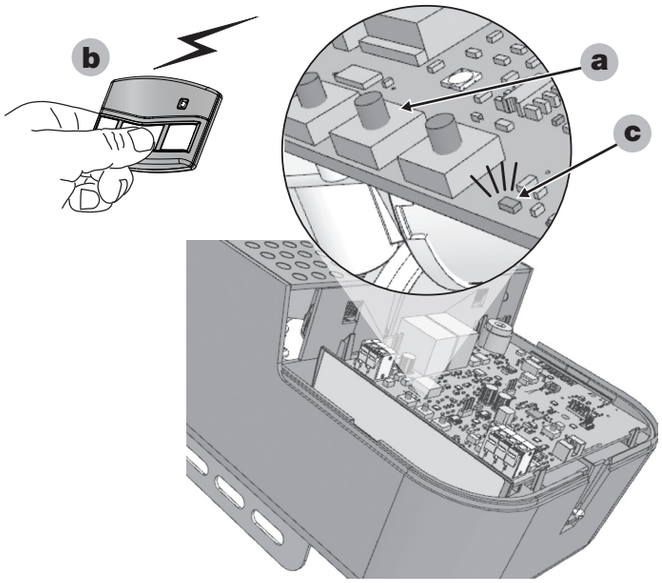

To Remove All Remote Control and Keypads

a) Press and hold the operator's LEARN button for ten seconds or more. Release the LEARN button.

b) The red light will blink three times signaling that all of the remotes in the operator's memory were erased.

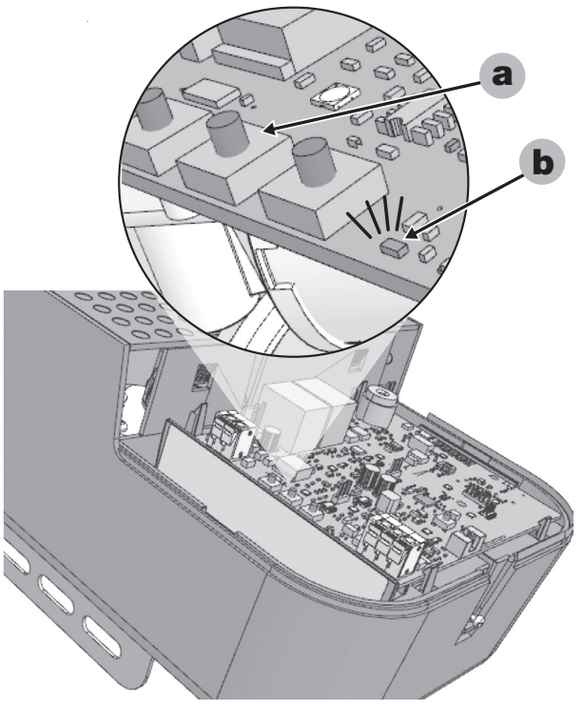

Testing

a) Stand clear of the door, press the remote control's button and verify that the operator starts. PRESS THE REMOTE CONTROL'S BUTTON AGAIN TO STOP THE DOOR MID-TRAVEL.

Replacing a Remote Control's Batteries

When the BLUE light on the remote glows dimly, or fails to light at all when the remote is activated, the batteries need replacing. Follow the steps in the illustration.

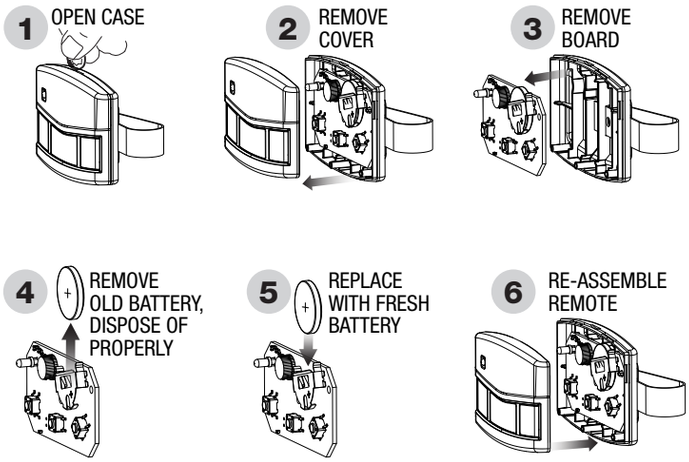

Programming Wireless Keypad Codes

The optional Linear wireless keypad is designed for use with automatic garage door and gate openers.

To Add or Remove a Wireless Keypad Code

a) Press the opener's LEARN button. The opener's light and red light will flash once and turn on for about 15 seconds. A wireless keypad code must be added or removed while the red light is still on.

b) While the RED LED is lit, enter a 1-6 digit code into the keypad. Press and hold the keypad's button until the opener beeps and the light blinks once.

c) The opener's light and the red light will flash once if a keypad code was added, or the opener's light and the red light will flash four times if a keypad code was removed.

d) Repeat Steps 1 & 2 for any additional codes.

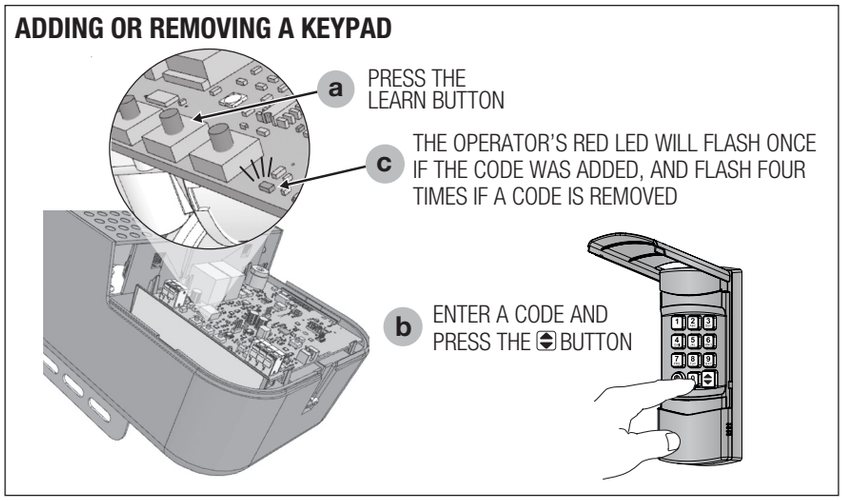

Replacing the Keypad's Batteries

Follow the steps in the diagram and use caution to keep batteries away from children.

- **Replace old batteries with fresh AAA Alkaline batteries.**
- **Properly dispose of old batteries.**
- **Many electronic stores and supermarkets have battery recycling bins.**
- **Alkaline batteries can be safely disposed of with normal household waste.**
- **Never dispose of batteries in fire because they could explode.**

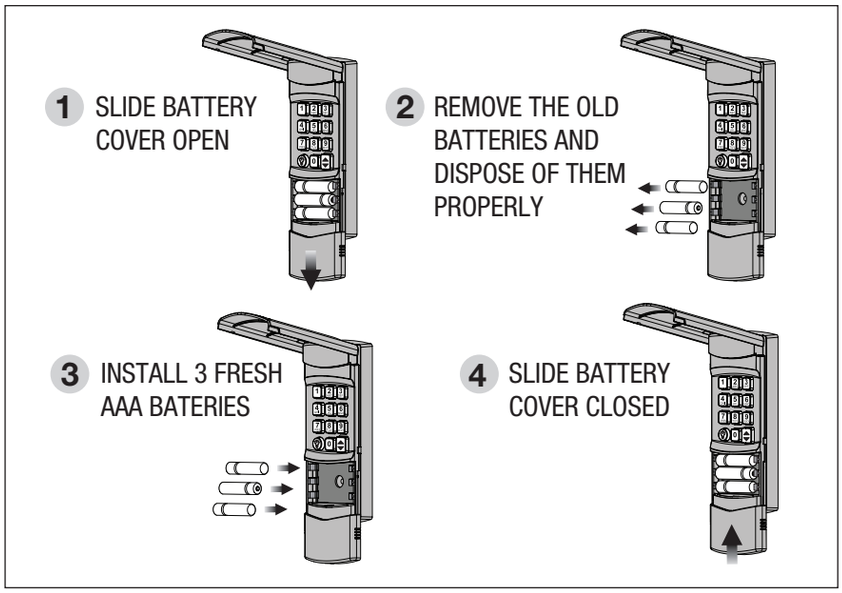

⚠ WARNING ⚠

KEEP BATTERIES OUT REACH OF CHILDREN. Swallowing batteries can lead to serious injury or death. If you suspect someone has swallowed a battery, go to the hospital immediately. Do not induce vomiting or eat or drink anything.

For more information, call the National Battery Ingestion Hotline: 202-625-3333.

Nice G.O. Homeowner Smartphone App Installation

Download, Register and Activate Application

Use your smart phone or tablet to visit your app store to download and install the Nice G.O. application. On initial use you'll be asked to register and create an account. Once complete, sign in with your new account information (QR Code displayed to the right).

Connect your Opener to the Nice G.O. app

Stand near Wi-Fi wall station. On your mobile device in the Nice G.O. app, tap the plus sign at the bottom right of screen to Connect Your Device. Follow directions in app to Connect Your Device.

Scan for app instructions.

Available on the iPhone App Store

GET IT ON Google Play

Setting Up the Wall Station

This Wall Station controls operation of the door and light using the buttons. When paired with the Nice G.O. smartphone app, you can control the garage door(s) from any location, invite and manage other users' app and operator access, control the lights, schedule operator events and be alerted of all garage door activities.

Requirements

To use with the app you will need:

- a Wi-Fi network with Internet connectivity,
- a strong Wi-Fi signal in the garage where you are installing the Wall Station and
- an Android or iOS phone.

Test Wi-Fi Signal Strength with Your Smart Phone

If you have 2 or 3 bars on your phone from the Wi-Fi network, the signal is strong and you can proceed. If not, use one of these options to extend your Wi-Fi network's range.

- Move your Wi-Fi router closer to the garage.
- Purchase a Wi-Fi range extender.

Strong Wi-Fi signal
Wall Station will connect to your Wi-Fi network.

Weak Wi-Fi signal
Wall Station may not connect to your Wi-Fi network.

No Wi-Fi signal
Wall Station will not connect to your Wi-Fi network.

The Wi-Fi wall station must receive a strong signal from your home's Wi-Fi router to work.

LEDs on the Wall Station

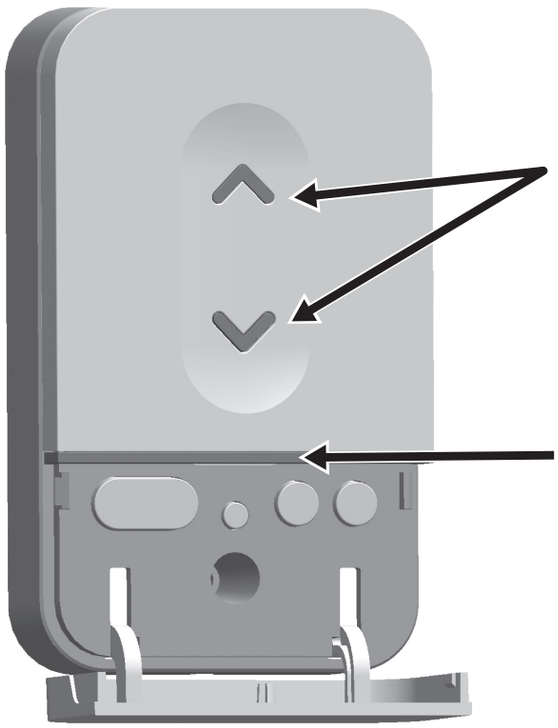

The Wall Station has two LEDs that convey information at a glance. The top LED provides information on the vacation mode.

Vacation Mode LED	
ON	Normal operation. Vacation mode disabled.
FLASHING	Vacation mode enabled.

The bottom LED indicates the state of the Wi-Fi connection and device.

Wi-Fi Connectivity LED	
RED - Solid	Not paired, not connected to access point
RED - Blinking Fast	Pairing Mode
BLUE - Blinking slowly	Paired but unable to connect to the internet
MAGENTA - Blinking fast	Over the air update
MAGENTA - Solid	Over the air reboot
YELLOW - Blinking fast	Unable to connect to Wi-Fi

Garage Door Operator Maintenance

Weather conditions may affect the door operation which could require some re-setting of the operator's adjustments. Doors may swell and become heavier during wet periods, door hinges and rollers might bind during cold periods. To insure safe operation of the door, perform the following tests, including any additional test steps described.

Aligning the Infrared Safety Beam

The safety beam has two components, a sender and a receiver. The sender produces a narrow infrared beam that travels across the bottom of the door opening to the infrared receiver. If an object blocks the infrared beam while the door is closing, the door will stop, then reverse and fully open (the operator's light will flash three times). **As a safety feature, the operator will not attempt to close if the door is open and the infrared safety beam is blocked or out of alignment. In this case, the door can be forced closed by pressing and holding the wall station pushbutton (be sure the door area is in clear view).**

⚠ WARNING ⚠

With the door closed, disengage the trolley from the chain or belt during these alignment tests by pulling the red release handle.

⚠ WARNING ⚠

Serious injury or death from a closing garage door may result because of failure to test and adjust safety reverse system. Repeat this test monthly and adjust as needed.

Safety Beam

a) Check that the operator has power. The green lights on the sender and receiver should be lit.

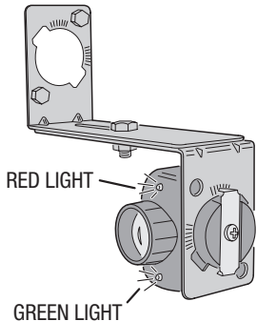

b) If the receiver's green light is on (but the red light is off) the receiver has power, but it's not detecting the infrared beam from the sender. The red light might flash when the beam is partially detected. This can be caused by misalignment or something blocking the beam. Adjust the safety beam sender and receiver while watching the receiver's red light (stay out of the beam while aligning it).

c) When the red light stays on, rotate the sender towards the ceiling and stop when the red light on the receiver begins to flicker.

d) Rotate the sender back towards a horizontal position with the floor and stop as soon as the red light on the receiver lights solid. The beam is now properly aligned.

SAFETY BEAM INDICATOR TABLE	
GREEN ON	POWER ON
GREEN OFF	POWER OFF
RED ON	BEAM OK - NO BLOCKAGE
RED OFF	BEAM BLOCKED OR MIS-ALIGNED
RED FLASHING	BEAM ALIGNED POORLY

NOTE: If the receiver's red light remains off, check for: **1)** Dirt on the receiver's lens, **2)** Sunlight shining into the receiver's lens, **3)** A short in the safety beam wiring (from staples or at the operator terminals).

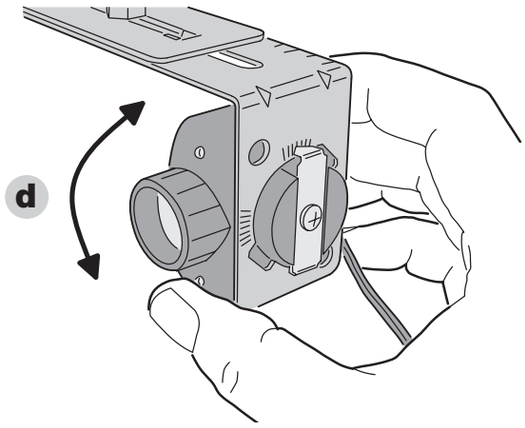

Checking for Reversal

a) **With the door closed and the operator disengaged from the door,** press the wall station button to move the traveler (the part on the belt or chain that the trolley engages with) to the up position (away from the door). **NOTE: Do not cycle the operator to full travel without the door connected.**

b) Push the wall station button again. While the traveler is moving to the down position (toward the door), block the safety beam. **THE TRAVELER MUST STOP, THEN REVERSE TO THE UP POSITION.** The operator's light and red light should flash three times.

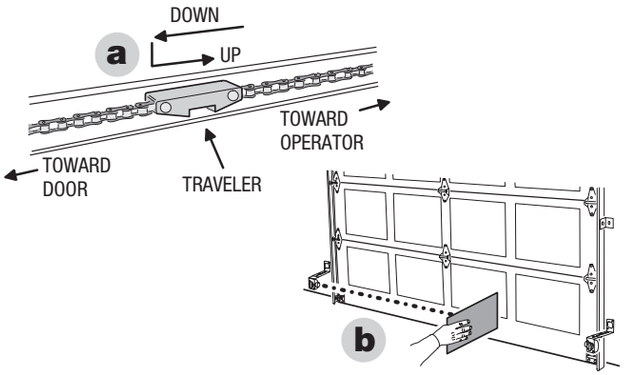

Checking Forced Closure Feature

a) Place an object in the path of the safety beam. Check that constant pressure is required on the wall station button to cause the traveler to move toward the down position.

b) Release the Wall Station button before the operator stops; check that the traveler returns to the up position.

NOTE: The garage door operator will not respond to a CLOSE command from a radio transmitter if the safety beam is blocked.

c) To reconnect the operator, flip the release lever up. Raise the door manually until the operator reconnects.

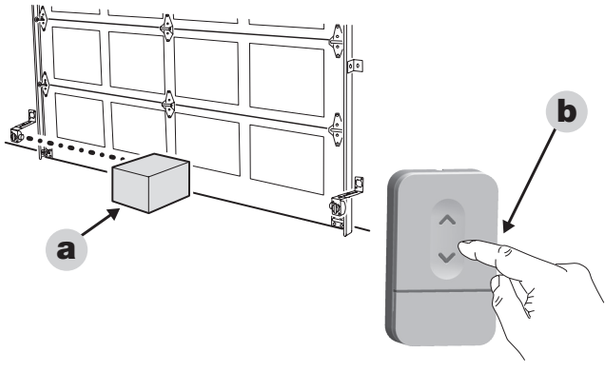

d) To reconnect the operator, flip the release lever up and run the operator.

e) Check Safety Beam operation (p. 12).

f) Perform the Safety Reversal System Test (pg. 7).

⚠ WARNING ⚠

The garage door operator must not be installed and used on an unbalanced door. The operator's internal door force sensor will not function properly on an unbalanced door. Risk of serious injury or death may result.

After Servicing the Operator

a) Check Safety Beam operation (pg. 12).

b) Perform the Adjusting the Open and Close Limits (pg. 6).

c) Perform the Safety Reversal System Test (pg. 15).

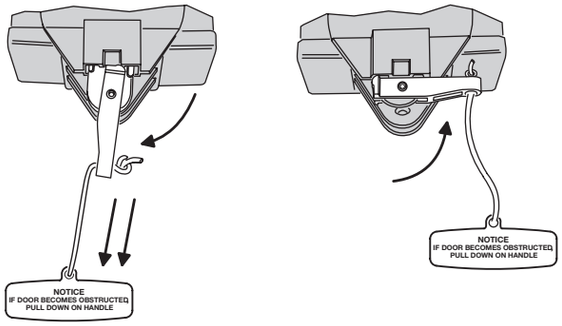

Every 6 Months

Check the belt or chain tension.

- For belt-drive rails, examine the length of the tension spring in the traveler. It should be about 1" long.
- For chain-drive rails, examine the spacing between the turnbuckle and the rail. The turnbuckle should be slightly above the rail.

NOTE: Too much or too little chain tension will cause excessive sprocket noise.

⚠ WARNING ⚠

Always perform the Safety Reversal System Test **(pg. 15) after making any adjustments to the operator.**

Chain Adjustment

If necessary, use the following steps to adjust the chain.

a) Hold the turnbuckle with a flat blade screwdriver, and loosen the two lock-nuts with a 7/16” end wrench.

b) Twist the turnbuckle to adjust the chain tension. Adjust the chain until the turnbuckle is sightly above the rail.

c) Hold the turnbuckle with a flat blade screwdriver and tighten the two lock-nuts with a 7/16” end wrench.

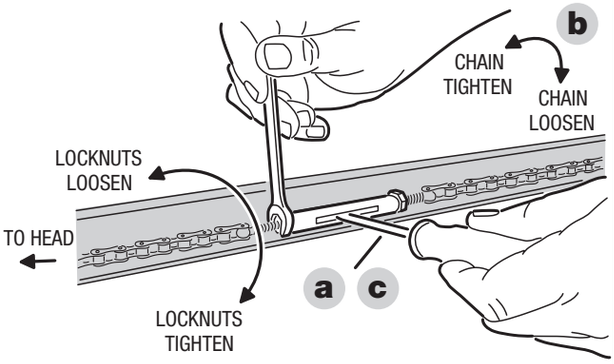

Belt Adjustment

a) The tension spring in the traveler keeps the belt taut. The factory setting for the tension spring length is .9” long. If the tension spring is longer than 1”, adjust the belt.

b) Hold the traveler so the adjustment wheel is visible through the large slot.

c) Use a flat blade screwdriver to turn the adjustment wheel to compress the tension spring until its length is between .9” and 1” long.

Every Year

Check the door hardware for lubrication needs. Lubricate door hinges, rollers and bearings according to door manufacturer’s recommended procedures.

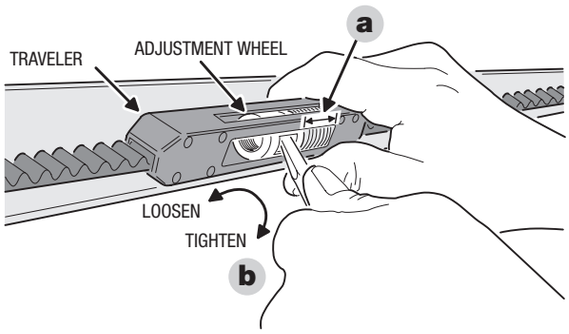

Disconnect the Operator

Every Month

a) With the door closed, pull the red release handle to disconnect the operator from the door.

b) From outside the garage, slowly open the door manually all the way, and then close it all the way. Notice if there is any binding, sticking or rubbing. The door should move smoothly in both directions.

c) Raise the garage door about halfway up. Carefully release the door and see if the door balances. It should stay in place. Close the door.

NOTE: If the garage door is unbalanced or the door travel isn’t smooth, have a qualified garage door professional adjust or repair the door.

⚠ WARNING ⚠

Garage door hardware (springs, cables, brackets, pulleys, etc.) are under extreme pressure and tension. DO NOT ATTEMPT TO LOOSEN, TIGHTEN OR ADJUST ANY DOOR HARDWARE. CALL A QUALIFIED GARAGE DOOR INSTALLATION PROFESSIONAL!

Field Reset

In installations where the door spring, door, or hardware is being replaced and the operator was already programmed for the old door, reset the operator’s settings using the following steps.

a) Press and hold down the UP, DOWN, and LEARN buttons at the same time for ten seconds.

b) Release the buttons (after the ten seconds). The red and green LED’s flash twice, and unit will beep twice. The operator will erase all force history and reset the force setting back to LOW and erase all set limits, **but it will still retain all programmed transmitters in memory.**

c) **AFTER PERFORMING A FIELD RESET, THE OPEN AND CLOSE LIMITS MUST BE ADJUSTED BEFORE THE OPERATOR WILL FUNCTION.**

Troubleshooting

Beep/Flash Trouble Code	Problem	Cause	Remedy
1 Beep/Flash	No Problem	Remote control entered into memory	Add any additional remote controls
2 Beeps/Flashes	Door won't operate	Shorted wall station wires	Check wall station wires. Be sure both are connected to the terminal. Check for a staple in the wall station wires. Remove any staples compressing the wire. Check for frayed wires.
3 Beeps/Flashes	Door won't close	Safety beam obstacle	Check for obstacles. Align the safety beams.
4 Beeps/Flashes	Door reverses or won't open or close	Open or close force exceeded	Check for obstruction or binding of the garage door. Adjust force factor if necessary. Perform a field reset if necessary.
5 Beeps/Flashes	Door won't open from remote control	Remote was activated while in vacation mode.	Activate Vacation Mode switch on wall station (or with the Nice G.O. app) to exit vacation mode.
6 Beeps/Flashes	Limit error	Down limit and up limit are set too close together.	Reset the open and close limits. If error occurs again, contact a qualified garage door professional.
7 Beeps/Flashes	Door reverses or won't open or close	Encoder has detected an error	Check for obstruction or binding of the garage door. If error occurs again, contact a qualified garage door professional.
Beep Only Trouble Code	**Problem**	**Cause**	**Remedy**
1 Beep	Low Battery	Battery is low	Check that AC power is connected and allow battery to charge. It will take approximately 10 hours to charge the battery.
4 Beeps	Diminished Battery Capacity	Battery can no longer hold a full charge.	The battery will need replacing in the near future. Please contact your Dealer for a battery replacement.
5 Beeps	Battery Shorted. Battery minimal capacity.	Battery is internally shorted or disconnected, or the battery leads are shorted. Battery has reached end of life.	Replace battery ASAP. Please contact your GDO dealer to schedule a replacement.

Limited Warranty

This Linear product is warranted to the original consumer against defects in material and workmanship by Nice North America LLC:

MODEL	ELECTRONICS	MECHANICAL	MOTOR	BELT	CHAIN
LINEAR661	1 year	5 years	Lifetime	Lifetime	5 years

This product is warranted to the original consumer against defects in material and workmanship for the periods mentioned above. Nice North America will repair, or at its option, replace, any device that it finds requires service under this warranty, and will return the repaired or replaced device to the consumer at Nice North America's cost. Devices must be sent to Nice North America for service at owner's expense. This warranty does not apply to damage to the product from negligence, abuse, abnormal usage, misuse, accidents, normal wear or tear or due to failure to follow Seller's instructions, or arising from improper installation, storage or maintenance. In no event will Nice North America be responsible for incidental, compensatory, punitive, consequential, indirect, special or other damages. The remedies provided by this warranty are exclusive. Some states do not allow the exclusion or limitation of incidental and consequential damages, so the above limitation or exclusion may not apply to you. Any warranties implied by law are limited to the time periods set forth above. Some states do not allow limitations on how long an implied warranty lasts, so the above limitation may not apply to you. This warranty gives you specific legal rights, and you may also have other rights which vary from state to state.

For warranty service and shipping instructions please contact **Nice North America Technical Services at 1-800-421-1587**. Prior to a Return Authorization number being approved and generated, troubleshooting will be required with a Nice North America technical services representative. In order to be protected by this warranty, save your proof of purchase or formal bill of sale as it may be required should service be needed. Contact Nice North America Technical Services for troubleshooting and consideration of a Return Authorization and other important details. For additional information on our warranty policies please reference **https://na.niceforyou.com/support/warranty-and-returns/**

REGULATORY INFORMATION

We, Nice North America LLC of 5919 Sea Otter Place, Carlsbad, CA 92008, declare under our sole responsibility that the device, LINEAR600 complies with Part 15 of the FCC rules.

FCC & IC Notice

This device complies with Part 15 of the FCC Rules and Industry Canada license exempt standard(s). Operation is subject to the following two conditions:
(1) This device may not cause harmful interference, and
(2) This device must accept any interference received, including interference received that may cause undesired operation. Le présent appareil est conforme aux CNR d'Industrie Canada applicables aux appareils radio exempts de licence. L'exploitation est autorisée aux deux conditions suivantes:

(1) l'appareil ne doit pas produire de brouillage, et
(2) l'utilisateur de l'appareil doit accepter tout brouillage radioélectrique subi, même si le brouillage est susceptible d'en compromettre le fonctionnement.

This Class B digital apparatus complies with Canadian ICES-003
Cet appareil numérique de la classe B est conforme à la norme NMB-003 du Canada.

This equipment has been tested and found to comply with the limits for a Class B digital device, pursuant to Part 15 of the FCC Rules. These limits are designed to provide reasonable protection against harmful interference in a residential installation.

This equipment generates, uses, and can radiate radio frequency energy and, if not installed and used in accordance with the instructions may cause harmful interference to radio communications. However, there is no guarantee that interference will not occur in a particular installation. If this equipment does cause harmful interference to radio or television reception, which can be determined by turning the equipment off and on, the user is encouraged to try to correct the interference by one or more of the following measures:

- Reorient or relocate the receiving antenna.
- Increase the separation between the equipment and receiver
- Connect the equipment into an outlet on a circuit different from that to which the receiver is connected
- Consult the dealer or an experienced radio/TV technician to help.

WARNING:

Changes or modifications not expressly approved by the manufacturer could void the user's authority to operate the equipment.

LINEAR™
a Nice brand

Linear Sales
(800) 543-4283

Linear Service
(800) 421-1587
M – F, 8am – 7pm EST

Nice North America LLC
5919 Sea Otter Place, Suite 100
Carlsbad, CA 92010
www.linear-solutions.com

10033066 Rev-X7

Nice

Niceforyou.com

©2023 Nice North America LLC. Linear is a registered trademark of Nice North America LLC. All rights reserved.