This document is the property of Remtron Inc. and contains PROPRIETARY information. All recipients hereof agree to the foregoing, and agree not to make any duplication thereof or to disclose the information herein to others or to use it for any purpose other then that for which it is loaned without the express written consent of Remtron, Inc. and to return the document upon demand

REVISIONS			
LTR	DESCRIPTION	DATE	DRAWN
1	INITAL DESIGN	10/01/97	JO
A2	INITIAL RELEASE	11/24/98	JO
B	ECN 900162 REV B	12/09/98	JO
C	DOCUMENT BUILD PER ECN 900162 REV C	03/05/99	SSL
D	DOCUMENT BUILD PER ECN 900162 REV D	07/20/99	JO

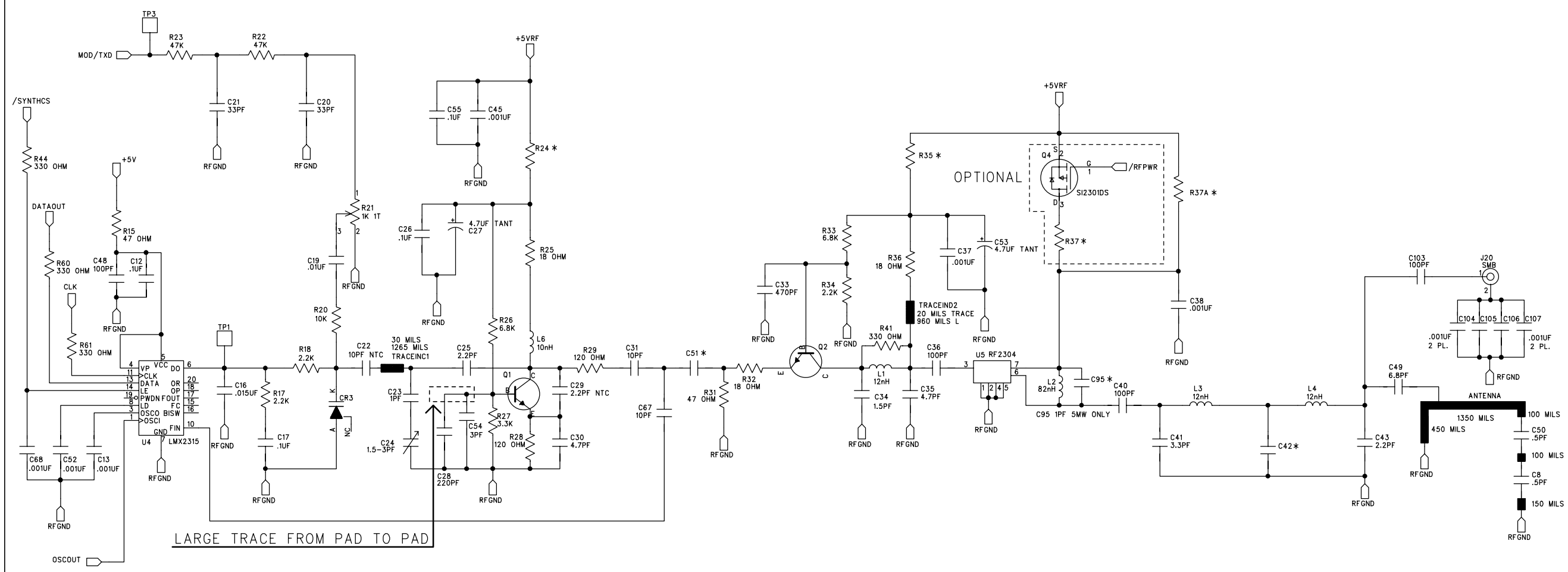

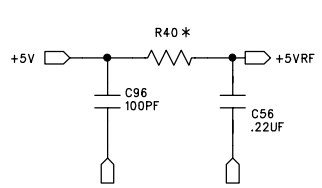

* COMPONENT VALUES

REF	-01 1MW	-03 5MW
R24	180 OHM	47 OHM
R35	47 OHM	18 OHM
R37A	120 OHM	18 OHM
R37	120 OHM	18 OHM
R40	22 OHM	10 OHM
C42	3.3 pF	3.9 pF
C51	4.7 pF	10 pF
C95		1 pF

DRAWN: JO	DATE: 07/20/99	REMTRON 1916 W. MISSION RD. ESCONDIDO, CA. 92029-1114	
ENG:	DATE:	TITLE: SCHEMATIC, RCT834, RCT844	
MFG:	DATE:	SIZE C	DOCUMENT NUMBER: 800162	REV D
RELEASED:	DATE:	FILE: 800162D.SCH	SHEET 2 OF 2