RADIO TEST REPORT
FCC ID: EHX-WCCOAMPE

Product: Coalesce Meeting Place Edition
Trade Mark: N/A
Model No.: WC-COA-MPE
Serial Model: N/A
Report No.: SER171116001001E
Issue Date: 13 Dec. 2017

Prepared for

Black Box Corporation
1000 Park Drive, Lawrence, Pennsylvania 15055, United States Of America

Prepared by

Shenzhen NTEK Testing Technology Co., Ltd.
1/F, Building E, Fenda Science Park, Sanwei Community, Xixiang Street Bao'an District, Shenzhen 518126 P.R. China
Tel.: +86-755-6115 6588
Fax.: +86-755-6115 6599
Website:http://www.ntek.org.cn

TABLE OF CONTENTS

1 TEST RESULT CERTIFICATION 3

2 SUMMARY OF TEST RESULTS 4

3 FACILITIES AND ACCREDITATIONS 5

3.1 FACILITIES 5
3.2 LABORATORY ACCREDITATIONS AND LISTINGS 5
3.3 MEASUREMENT UNCERTAINTY 5

4 GENERAL DESCRIPTION OF EUT 6

5 DESCRIPTION OF TEST MODES 8

6 SETUP OF EQUIPMENT UNDER TEST 9

6.1 BLOCK DIAGRAM CONFIGURATION OF TEST SYSTEM 9
6.2 SUPPORT EQUIPMENT 10
6.3 EQUIPMENTS LIST FOR ALL TEST ITEMS 11

7 TEST REQUIREMENTS 13

7.1 CONDUCTED EMISSIONS TEST 13
7.2 RADIATED SPURIOUS EMISSION 18
7.3 6DB BANDWIDTH 27
7.4 PEAK OUTPUT POWER 30
7.5 POWER SPECTRAL DENSITY 33
7.6 CONDUCTED BAND EDGE MEASUREMENT 36
7.7 SPURIOUS RF CONDUCTED EMISSIONS 38
7.8 ANTENNA APPLICATION 42

1 TEST RESULT CERTIFICATION

Applicant's name ..... :	Black Box Corporation
Address ..... :	1000 Park Drive, Lawrence, Pennsylvania 15055, United States Of America
Manufacturer's Name ..... :	Shenzhen Hotack Technology Co.,Ltd.
Address ..... :	Floor 1 Building 2, Haochuang Industrial Park, yousong Road, Longhua New District, Shenzhen, Guangdong, China
Product description	Wireless Presentation System
Product name ..... :	Coalesce Meeting Place Edition
Model and/or type reference ..... :	WC-COA-MPE
Serial Model ..... :	N/A

Measurement Procedure Used:

APPLICABLE STANDARDS	
APPLICABLE STANDARD/ TEST PROCEDURE	TEST RESULT
FCC 47 CFR Part 2, Subpart J FCC 47 CFR Part 15, Subpart C KDB 174176 D01 Line Conducted FAQ v01r01 ANSI C63.10-2013 FCC KDB 558074 D01 DTS Meas Guidance v04	Complied

This device described above has been tested by Shenzhen NTEK Testing Technology Co., Ltd., and the test results show that the equipment under test (EUT) is in compliance with the FCC requirements. And it is applicable only to the tested sample identified in the report.
This report shall not be reproduced except in full, without the written approval of Shenzhen NTEK Testing Technology Co., Ltd., this document may be altered or revised by Shenzhen NTEK Testing Technology Co., Ltd., personnel only, and shall be noted in the revision of the document.
The test results of this report relate only to the tested sample identified in this report.

Date of Test : 16 Nov. 2017 ~ 13 Dec. 2017

Testing Engineer : Eileen Liu.
(Eileen Liu)

Technical Manager : Jason chen
(Jason Chen)

Authorized Signatory : Sam. chen
(Sam Chen)

2 SUMMARY OF TEST RESULTS

FCC Part15 (15.247), Subpart C			
Standard Section	**Test Item**	**Verdict**	**Remark**
15.207	Conducted Emission	PASS	
15.247 (a)(2)	6dB Bandwidth	PASS	
15.247 (b)	Peak Output Power	PASS	
15.247 (c)	Radiated Spurious Emission	PASS	
15.247 (d)	Power Spectral Density	PASS	
15.205	Band Edge Emission	PASS	
15.205	Spurious RF Conducted Emission	PASS	
15.203	Antenna Requirement	PASS	

Remark:
1. "N/A" denotes test is not applicable in this Test Report.
2. All test items were verified and recorded according to the standards and without any deviation during the test.
3. This EUT has also been tested and complied with the requirements of FCC Part 15, Subpart B, recorded in a separate test report.

3 FACILITIES AND ACCREDITATIONS

3.1 FACILITIES

All measurement facilities used to collect the measurement data are located at
1/F, Building E, Fenda Science Park, Sanwei Community, Xixiang Street, Bao'an District, Shenzhen 518126 P.R. China.
The sites are constructed in conformance with the requirements of ANSI C63.7, ANSI C63.10 and CISPR Publication 22.

3.2 LABORATORY ACCREDITATIONS AND LISTINGS

Site Description

CNAS-Lab.	:	The Laboratory has been assessed and proved to be in compliance with CNAS-CL01:2006 (identical to ISO/IEC 17025:2005) The Certificate Registration Number is L5516.
IC-Registration		The Certificate Registration Number is 9270A-1.
FCC- Accredited		Test Firm Registration Number: 463705. Designation Number: CN1184
A2LA-Lab.		The Certificate Registration Number is 4298.01 This laboratory is accredited in accordance with the recognized International Standard ISO/IEC 17025:2005 General requirements for the competence of testing and calibration laboratories. This accreditation demonstrates technical competence for a defined scope and the operation of a laboratory quality management system (refer to joint ISO-ILAC-IAF Communiqué dated 8 January 2009).
Name of Firm	:	Shenzhen NTEK Testing Technology Co., Ltd.
Site Location	:	1/F, Building E, Fenda Science Park, Sanwei Community, Xixiang Street, Bao'an District, Shenzhen 518126 P.R. China.

3.3 MEASUREMENT UNCERTAINTY

The reported uncertainty of measurement y±U, where expended uncertainty U is based on a standard uncertainty multiplied by a coverage factor of k=2, providing a level of confidence of approximately 95 %.

No.	Item	Uncertainty
1	Conducted Emission Test	±2.80dB
2	RF power, conducted	±0.16dB
3	Spurious emissions, conducted	±0.21dB
4	All emissions, radiated(30MHz~1GHz)	±2.64dB
5	All emissions, radiated(1GHz~6GHz)	±2.40dB
6	All emissions, radiated(＞6GHz)	±2.52dB
7	Temperature	±0.5℃
8	Humidity	±2%

4 GENERAL DESCRIPTION OF EUT

Product Feature and Specification	
Equipment	Coalesce Meeting Place Edition
Trade Mark	N/A
FCC ID	EHX- WCCOAMPE
Model No.	WC-COA-MPE
Serial Model	N/A
Model Difference	N/A
Operating Frequency	2402MHz~2480MHz
Modulation	GFSK
Number of Channels	40 Channels
Bluetooth Version	BT V4.2(BLE)
Antenna Type	PIFA Antenna
Antenna Gain	3.73dBi
Power supply	☒DC supply: DC 5V from Adapter
	☒Adapter supply: Model:A241-0503000I Input: AC 100-240V 50/60Hz 0.8A Output: DC 5V, 3000mA
HW Version	V4
SW Version	Kernel 4.4.16

Note: Based on the application, features, or specification exhibited in User's Manual, the EUT is considered as an ITE/Computing Device. More details of EUT technical specification, please refer to the User's Manual.

Revision History

Report No.	Version	Description	Issued Date
SER171116001001E	Rev.01	Initial issue of report	Dec 13, 2017

5 DESCRIPTION OF TEST MODES

To investigate the maximum EMI emission characteristics generates from EUT, the test system was pre-scanning tested base on the consideration of following EUT operation mode or test configuration mode which possible have effect on EMI emission level. Each of these EUT operation mode(s) or test configuration mode(s) mentioned above was evaluated respectively.

The Transmitter was operated in the normal operating mode. The TX frequency was fixed which was for the purpose of the measurements.

Test of channel included the lowest and middle and highest frequency to perform the test, then record on this report.

Those data rates (1Mbps for GFSK modulation) were used for all test.

The EUT was pretested with 3 orientations placed on the table for the radiated emission measurement –X, Y, and Z-plane. The X-plane results were found as the worst case and were shown in this report.

Carrier Frequency and Channel list:

Channel	Frequency(MHz)
0	2402
1	2404
…	…
19	2440
20	2442
…	…
38	2478
39	2480

Note: fc=2402MHz+k×2MHz k=0 to 39

The following summary table is showing all test modes to demonstrate in compliance with the standard.

Test Cases	
Test Item	Data Rate/ Modulation
	Bluetooth 4.2_LE / GFSK
AC Conducted Emission	Mode 1: normal link mode
Radiated Test Cases	Mode 1: normal link mode
	Mode 2: Bluetooth Tx Ch00_2402MHz_1Mbps
	Mode 3: Bluetooth Tx Ch19_2440MHz_1Mbps
	Mode 4: Bluetooth Tx Ch39_2480MHz_1Mbps
Conducted Test Cases	Mode 2: Bluetooth Tx Ch00_2402MHz_1Mbps
	Mode 3: Bluetooth Tx Ch19_2440MHz_1Mbps
	Mode 4: Bluetooth Tx Ch39_2480MHz_1Mbps

Note:
1. The engineering test program was provided and the EUT was programmed to be in continuously transmitting mode.
2. AC power line Conducted Emission was tested under maximum output power.
3. For radiated test cases, the worst mode data rate 1Mbps was reported only, because this data rate has the highest RF output power at preliminary tests, and no other significantly frequencies found in conducted spurious emission.
4. EUT is set to continuous transmission mode. duty cycle greater than 98%.

6 SETUP OF EQUIPMENT UNDER TEST

6.1 BLOCK DIAGRAM CONFIGURATION OF TEST SYSTEM

For AC Conducted Emission Mode

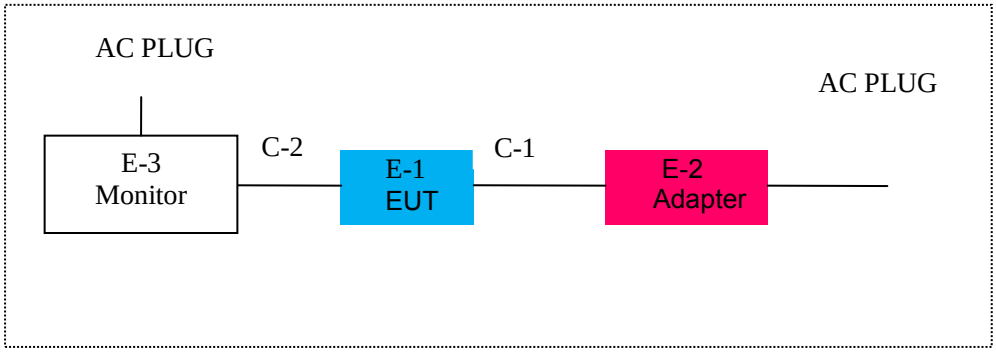

For Radiated Test Cases

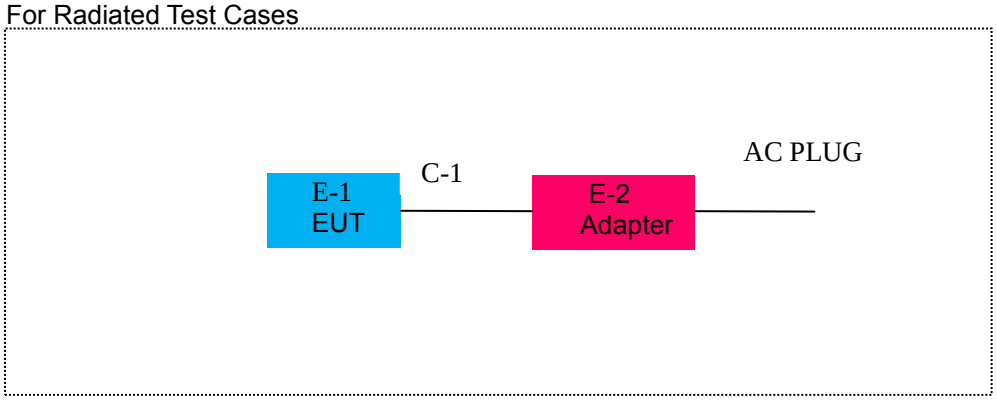

For Conducted Test Cases

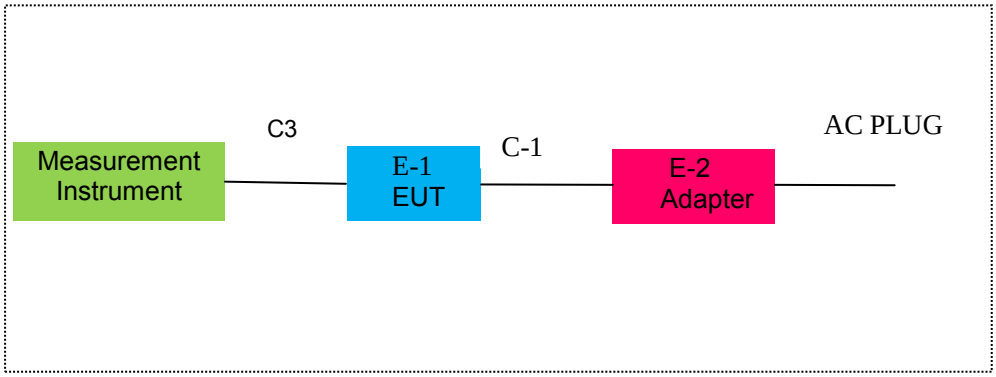

Note:The temporary antenna connector is soldered on the PCB board in order to perform conducted tests and this temporary antenna connector is listed in the equipment list.

6.2 SUPPORT EQUIPMENT

The EUT has been tested as an independent unit together with other necessary accessories or support units. The following support units or accessories were used to form a representative test configuration during the tests.

Item	Equipment	Mfr/Brand	Model/Type No.	FCC ID	Note
E-1	Coalesce Meeting Place Edition	N/A	WC-COA-MPE	EHX- WCCOAMPE	EUT
E-2	Adapter	A241-0503000I	N/A	N/A	Peripherals
E-3	LCD	SHARP	LCD-32MS46A	09426089241597	Peripherals

Item	Cable Type	Shielded Type	Ferrite Core	Length
C-1	USB Cable	NO	NO	1.2m
C-2	HDMI Cable	NO	NO	0.8m
C-3	RF Cable	NO	NO	0.5m

Notes:

(1) The support equipment was authorized by Declaration of Confirmation.
(2) For detachable type I/O cable should be specified the length in cm in『Length』column.
(3) “YES” is means “shielded” “with core”; “NO” is means “unshielded” “without core”.

6.3 EQUIPMENTS LIST FOR ALL TEST ITEMS

Radiation Test equipment

Item	Kind of Equipment	Manufacturer	Type No.	Serial No.	Last calibration	Calibrated until	Calibration period
1	Spectrum Analyzer	Aglient	E4407B	MY45108040	2017.06.06	2018.06.05	1 year
2	Spectrum Analyzer	Agilent	N9020A	MY49100060	2017.11.10	2018.11.09	1 year
3	EMI Test Receiver	Agilent	N9038A	MY53227146	2017.06.06	2018.06.05	1 year
4	Test Receiver	R&S	ESPI	101318	2017.06.06	2018.06.05	1 year
5	Bilog Antenna	TESEQ	CBL6111D	31216	2017.04.09	2018.04.08	1 year
6	50Ω Coaxial Switch	Anritsu	MP59B	6200983705	2017.06.06	2018.06.05	1 year
7	Horn Antenna	EM	EM-AH-10180	2011071402	2017.04.09	2018.04.08	1 year
8	Horn Ant	Schwarzbeck	BBHA 9170	9170-181	2017.07.06	2018.07.05	1 year
9	Amplifier	EMC	EMC051835SE	980246	2017.08.09	2018.08.08	1 year
10	Amplifier	MITEQ	TTA1840-35-HG	177156	2017.06.06	2018.06.05	1 year
11	Loop Antenna	ARA	PLA-1030/B	1029	2017.06.06	2018.06.05	1 year
12	Power Meter	DARE	RPR3006W	15I00041SNO84	2017.08.07	2018.08.06	1 year
13	Test Cable (9KHz-30MHz)	N/A	R-01	N/A	2017.04.21	2020.04.20	3 year
14	Test Cable (30MHz-1GHz)	N/A	R-02	N/A	2017.04.21	2020.04.20	3 year
15	High Test Cable(1G-40GHz)	N/A	R-03	N/A	2017.04.21	2020.04.20	3 year
16	High Test Cable(1G-40GHz)	N/A	R-04	N/A	2017.04.21	2020.04.20	3 year
17	temporary antenna connector (Note)	NTS	R001	N/A	N/A	N/A	N/A

Note:

We will use the temporary antenna connector (soldered on the PCB board) When conducted test
And this temporary antenna connector is listed within the instrument list

Conduction Test equipment

Item	Kind of Equipment	Manufacturer	Type No.	Serial No.	Last calibration	Calibrated until	Calibration period
1	Test Receiver	R&S	ESCI	101160	2017.06.06	2018.06.05	1 year
2	LISN	R&S	ENV216	101313	2017.04.19	2018.04.18	1 year
3	LISN	SCHWARZBECK	NNLK 8129	8129245	2017.06.06	2018.06.05	1 year
4	50Ω Coaxial Switch	ANRITSU CORP	MP59B	6200983704	2017.06.06	2018.06.05	1 year
5	Test Cable (9KHz-30MHz)	N/A	C01	N/A	2017.04.21	2020.04.20	3 year
6	Test Cable (9KHz-30MHz)	N/A	C02	N/A	2017.04.21	2020.04.20	3 year
7	Test Cable (9KHz-30MHz)	N/A	C03	N/A	2017.04.21	2020.04.20	3 year

1	Filter	TRILTHIC	2400MHz	29	2017.04.19	2018.04.18	1 year

Note: Each piece of equipment is scheduled for calibration once a year except the Test Cable which is scheduled for calibration every 3 years.

7 TEST REQUIREMENTS

7.1 CONDUCTED EMISSIONS TEST

7.1.1 Applicable Standard

According to FCC Part 15.207(a) and KDB 174176 D01 Line Conducted FAQ v01r01

7.1.2 Conformance Limit

Frequency(MHz)	Conducted Emission Limit	
	Quasi-peak	Average
0.15-0.5	66-56*	56-46*
0.5-5.0	56	46
5.0-30.0	60	50

Note: 1. *Decreases with the logarithm of the frequency
2. The lower limit shall apply at the transition frequencies
3. The limit decreases in line with the logarithm of the frequency in the range of 0.15 to 0.50MHz.

7.1.3 Measuring Instruments

The Measuring equipment is listed in the section 6.3 of this test report.

7.1.4 Test Configuration

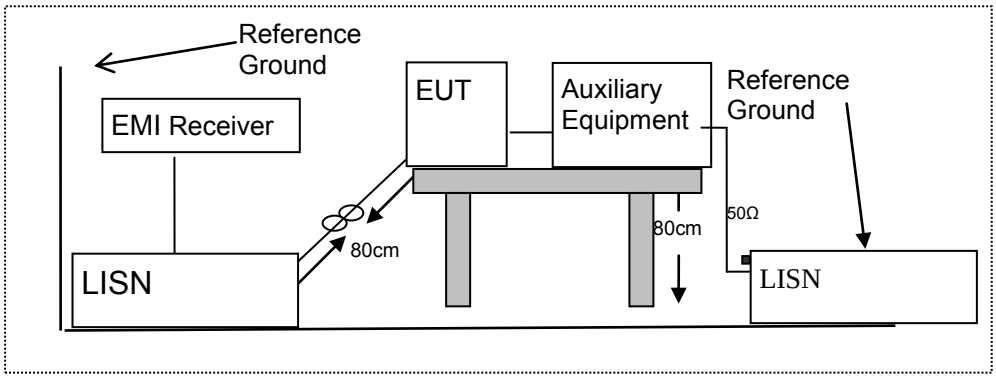

7.1.5 Test Procedure

According to the requirements in Section 13.1.4.1 of ANSI C63.10-2013 Conducted emissions the EUT measured in the frequency range between 0.15 MHz and 30 MHz using CISPR Quasi-Peak and average detector mode.

1. The EUT was placed 0.4 meter from the conducting wall of the shielding room.
2. The EUT was placed on a table which is 0.8m above ground plane.
3. Connect EUT to the power mains through a line impedance stabilization network (LISN). All other support equipments powered from additional LISN(s). The LISN provide 50 Ohm/ 50uH of coupling impedance for the measuring instrument.
4. Interconnecting cables that hang closer than 40 cm to the ground plane shall be folded back and forth in the center forming a bundle 30 to 40cm long.
5. I/O cables that are not connected to a peripheral shall be bundled in the center. The end of the cable may be terminated, if required, using the correct terminating impedance. The overall length shall not exceed 1 m.
6. LISN at least 80 cm from nearest part of EUT chassis.
7. The frequency range from 150KHz to 30MHz was searched.
8. Set the test-receiver system to Peak Detect Function and specified bandwidth(IF bandwidth=9KHz) with Maximum Hold Mode
9. For the actual test configuration, please refer to the related Item –EUT Test Photos.

7.1.6 Test Results

EUT：	Coalesce Meeting Place Edition	Model Name ：	WC-COA-MPE
Temperature：	25 ℃	Relative Humidity：	55%
Pressure：	1010hPa	Phase :	L
Test Voltage ：	DC 5V from Adapter AC 120V/60Hz	Test Mode：	Mode 1

Frequency (MHz)	Reading Level (dBμV)	Correct Factor (dB)	Measure-ment (dBμV)	Limits (dBμV)	Margin (dB)	Remark
0.1539	45.86	9.82	55.68	65.78	-10.10	QP
0.1539	26.83	9.82	36.65	55.78	-19.13	AVG
0.1980	43.38	9.82	53.20	63.69	-10.49	QP
0.1980	29.12	9.82	38.94	53.69	-14.75	AVG
0.2540	40.51	9.82	50.33	61.62	-11.29	QP
0.2540	22.65	9.82	32.47	51.62	-19.15	AVG
0.2980	37.97	9.82	47.79	60.30	-12.51	QP
0.2980	18.96	9.82	28.78	50.30	-21.52	AVG
0.4220	44.15	9.83	53.98	57.41	-3.43	QP
0.4220	18.69	9.83	28.52	47.41	-18.89	AVG
3.1860	29.68	10.05	39.73	56.00	-16.27	QP
3.1860	19.44	10.05	29.49	46.00	-16.51	AVG

Remark:

1. All readings are Quasi-Peak and Average values.
2. Factor = Insertion Loss + Cable Loss.

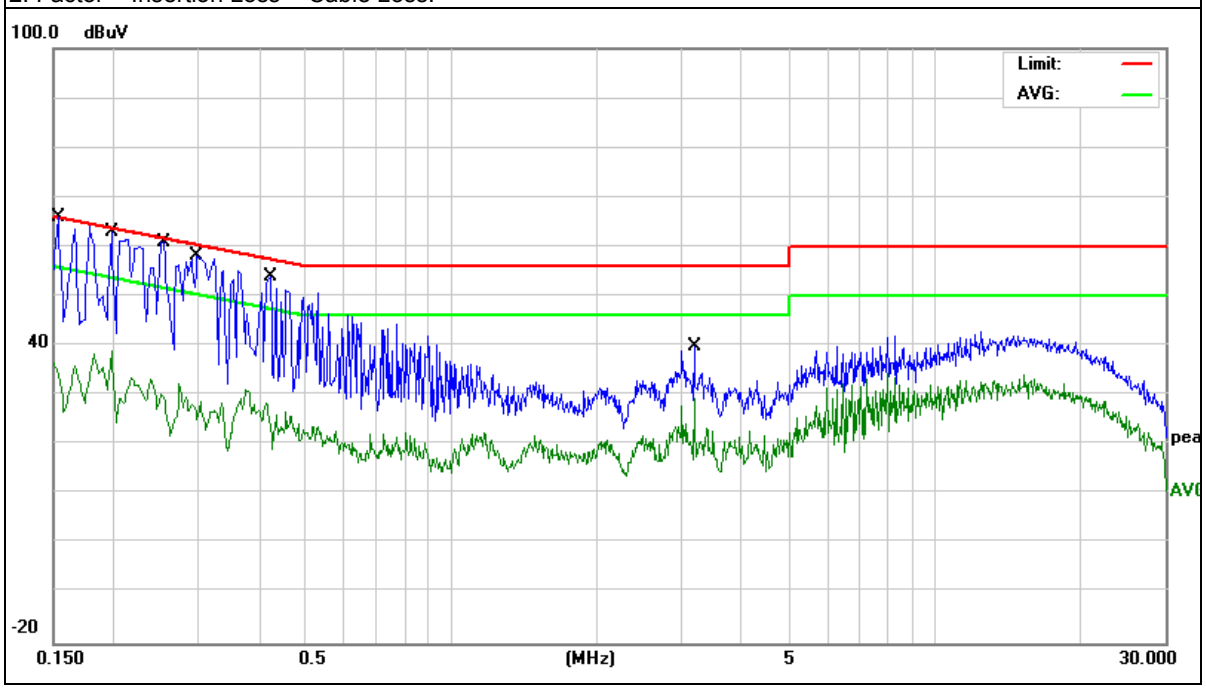

EUT：	Coalesce Meeting Place Edition	Model Name ：	WC-COA-MPE
Temperature：	25 ℃	Relative Humidity：	55%
Pressure：	1010hPa	Phase :	N
Test Voltage ：	DC 5V from Adapter AC 120V/60Hz	Test Mode：	Mode 1

Frequency (MHz)	Reading Level (dBμV)	Correct Factor (dB)	Measure-ment (dBμV)	Limits (dBμV)	Margin (dB)	Remark
0.1500	46.89	9.92	56.81	65.99	-9.18	QP
0.1500	26.14	9.92	36.06	55.99	-19.93	AVG
0.2260	41.27	9.92	51.19	62.59	-11.40	QP
0.2260	25.09	9.92	35.01	52.59	-17.58	AVG
0.2980	37.75	9.92	47.67	60.30	-12.63	QP
0.2980	19.65	9.92	29.57	50.30	-20.73	AVG
0.3740	33.79	9.93	43.72	58.41	-14.69	QP
0.3740	19.34	9.93	29.27	48.41	-19.14	AVG
0.6140	37.88	9.93	47.81	56.00	-8.19	QP
0.6140	12.84	9.93	22.77	46.00	-23.23	AVG
7.2419	30.01	10.07	40.08	60.00	-19.92	QP
7.2419	22.83	10.07	32.90	50.00	-17.10	AVG

Remark:

1. All readings are Quasi-Peak and Average values.
2. Factor = Insertion Loss + Cable Loss.

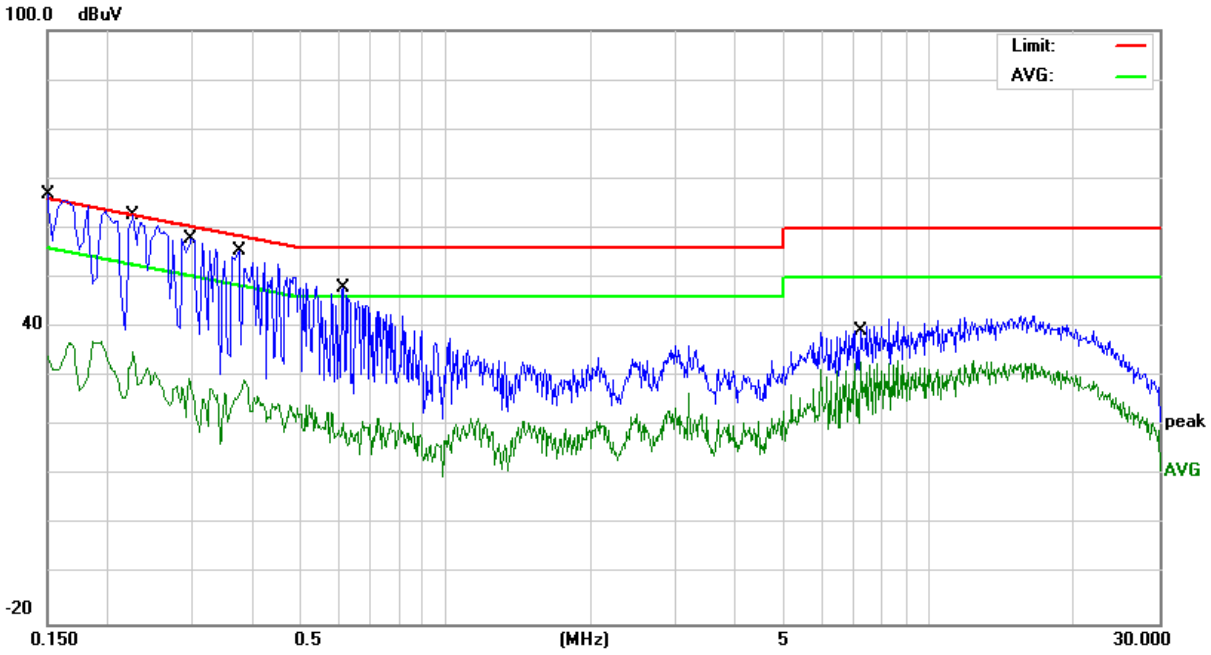

EUT：	Coalesce Meeting Place Edition	Model Name ：	WC-COA-MPE
Temperature：	25 ℃	Relative Humidity：	55%
Pressure：	1010hPa	Phase :	L
Test Voltage ：	DC 5V from Adapter AC 240V/60Hz	Test Mode：	Mode 1

Frequency (MHz)	Reading Level (dBμV)	Correct Factor (dB)	Measure-ment (dBμV)	Limits (dBμV)	Margin (dB)	Remark
0.1539	40.66	9.82	50.48	65.78	-15.30	QP
0.1539	22.90	9.82	32.72	55.78	-23.06	AVG
0.2898	32.60	9.82	42.42	60.53	-18.11	QP
0.2898	20.16	9.82	29.98	50.53	-20.55	AVG
0.3980	35.24	9.83	45.07	57.89	-12.82	QP
0.3980	22.75	9.83	32.58	47.89	-15.31	AVG
0.7820	28.55	9.86	38.41	56.00	-17.59	QP
0.7820	16.60	9.86	26.46	46.00	-19.54	AVG
1.2018	27.25	9.91	37.16	56.00	-18.84	QP
1.2018	15.10	9.91	25.01	46.00	-20.99	AVG
3.0099	26.87	10.05	36.92	56.00	-19.08	QP
3.0099	14.10	10.05	24.15	46.00	-21.85	AVG

Remark:

1. All readings are Quasi-Peak and Average values.
2. Factor = Insertion Loss + Cable Loss.

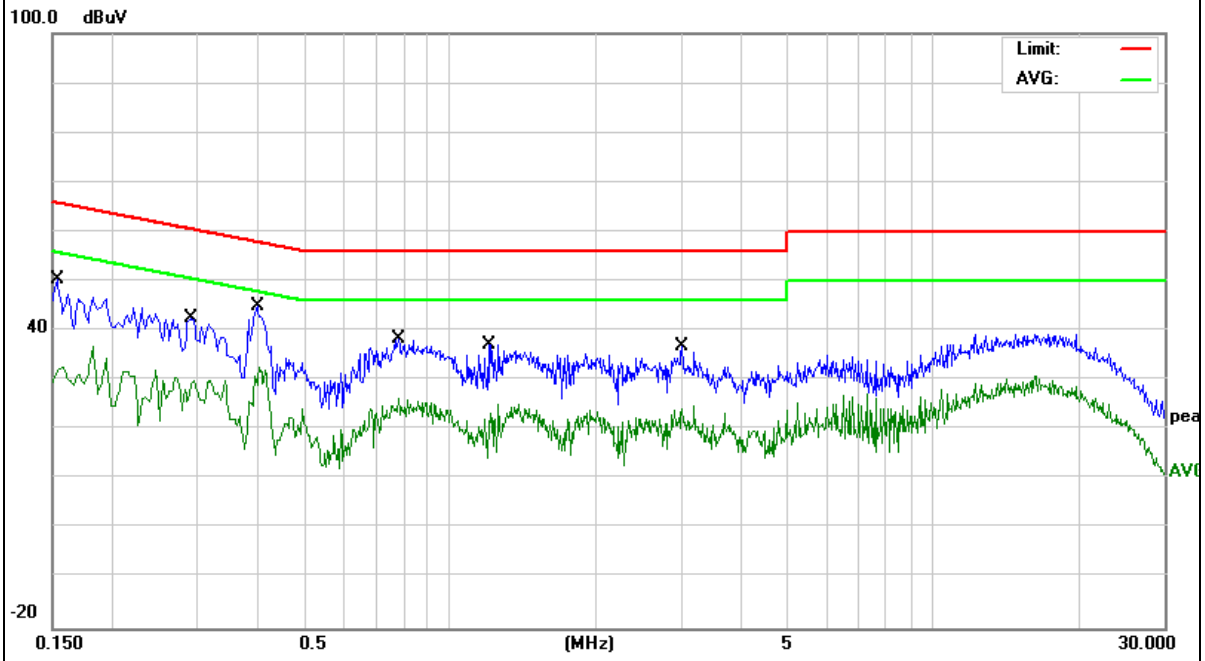

EUT:	Coalesce Meeting Place Edition	Model Name :	WC-COA-MPE
Temperature:	25 ℃	Relative Humidity:	55%
Pressure:	1010hPa	Phase :	N
Test Voltage :	DC 5V from Adapter AC 240V/60Hz	Test Mode:	Mode 1

Frequency (MHz)	Reading Level (dBμV)	Correct Factor (dB)	Measure-ment (dBμV)	Limits (dBμV)	Margin (dB)	Remark
0.2419	35.78	9.92	45.70	62.03	-16.33	QP
0.2419	21.98	9.92	31.90	52.03	-20.13	AVG
0.2740	34.96	9.92	44.88	60.99	-16.11	QP
0.2740	21.62	9.92	31.54	50.99	-19.45	AVG
0.3996	30.29	9.93	40.22	57.86	-17.64	QP
0.3996	23.57	9.93	33.50	47.86	-14.36	AVG
0.6740	27.32	9.93	37.25	56.00	-18.75	QP
0.6740	11.35	9.93	21.28	46.00	-24.72	AVG
1.3380	26.05	9.93	35.98	56.00	-20.02	QP
1.3380	11.41	9.93	21.34	46.00	-24.66	AVG
1.6577	26.40	9.94	36.34	56.00	-19.66	QP
1.6577	8.89	9.94	18.83	46.00	-27.17	AVG

Remark:

1. All readings are Quasi-Peak and Average values.
2. Factor = Insertion Loss + Cable Loss.

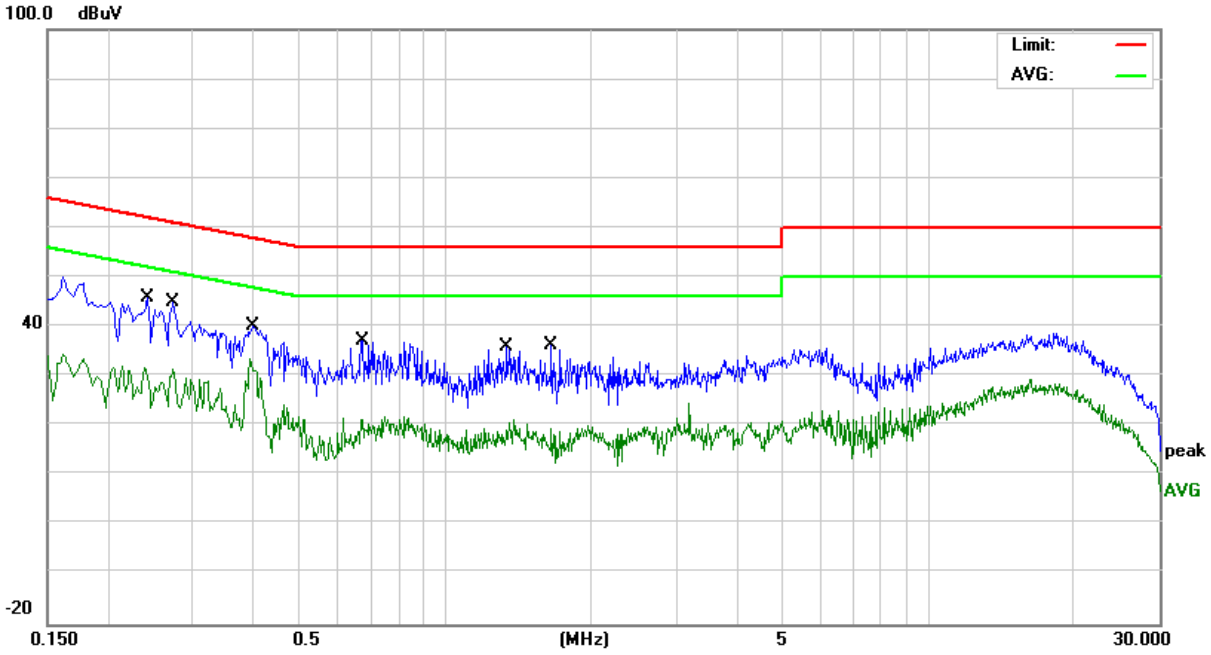

7.2 RADIATED SPURIOUS EMISSION

7.2.1 Applicable Standard

According to FCC Part 15.247(d) and 15.209 and ANSI C63.10-2013

7.2.2 Conformance Limit

According to FCC Part 15.247(d): radiated emissions which fall in the restricted bands, as defined in §15.205(a), must also comply with the radiated emission limits specified in §15.209(a) (see §15.205(c)).
According to FCC Part15.205, Restricted bands

MHz	MHz	MHz	GHz
0.090-0.110	16.42-16.423	399.9-410	4.5-5.15
10.495-0.505	16.69475-16.69525	608-614	5.35-5.46
2.1735-2.1905	16.80425-16.80475	960-1240	7.25-7.75
4.125-4.128	25.5-25.67	1300-1427	8.025-8.5
4.17725-4.17775	37.5-38.25	1435-1626.5	9.0-9.2
4.20725-4.20775	73-74.6	1645.5-1646.5	9.3-9.5
6.215-6.218	74.8-75.2	1660-1710	10.6-12.7
6.26775-6.26825	123-138	2200-2300	14.47-14.5
8.291-8.294	149.9-150.05	2310-2390	15.35-16.2
8.362-8.366	156.52475-156.52525	2483.5-2500	17.7-21.4
8.37625-8.38675	156.7-156.9	2690-2900	22.01-23.12
8.41425-8.41475	162.0125-167.17	3260-3267	23.6-24.0
12.29-12.293	167.72-173.2	3332-3339	31.2-31.8
12.51975-12.52025	240-285	3345.8-3358	36.43-36.5
12.57675-12.57725	322-335.4	3600-4400	(2)
13.36-13.41			

20dBc in any 100 kHz bandwidth outside the operating frequency band. In case the emission fall within the restricted band specified on 15.205(a), then the 15.209(a) limit in the table below has to be followed.

Restricted Frequency(MHz)	Field Strength (μV/m)	Field Strength (dBμV/m)	Measurement Distance
0.009~0.490	2400/F(KHz)	20 log (uV/m)	300
0.490~1.705	2400/F(KHz)	20 log (uV/m)	30
1.705~30.0	30	29.5	30
30-88	100	40	3
88-216	150	43.5	3
216-960	200	46	3
Above 960	500	54	3

Limits of Radiated Emission Measurement(Above 1000MHz)

Frequency(MHz)	Class B (dBuV/m) (at 3M)	
	PEAK	AVERAGE
Above 1000	74	54

Remark :1. Emission level in dBuV/m=20 log (uV/m)
2. Measurement was performed at an antenna to the closed point of EUT distance of meters.
3. Distance extrapolation factor =40log(Specific distance/ test distance)(dB);
Limit line=Specific limits(dBuV) + distance extrapolation factor.

7.2.3 Measuring Instruments

The Measuring equipment is listed in the section 6.3 of this test report.

7.2.4 Test Configuration

(a) For radiated emissions below 30MHz

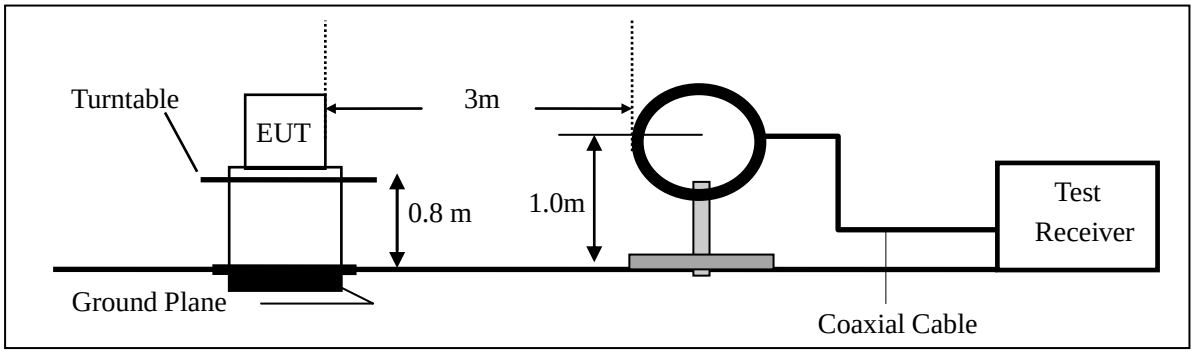

(b) For radiated emissions from 30MHz to 1000MHz

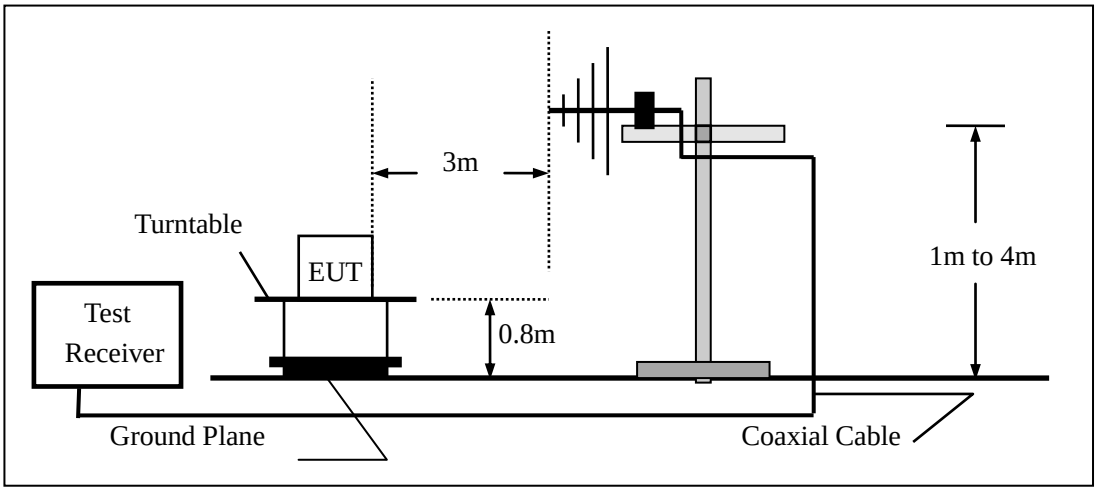

(c) For radiated emissions above 1000MHz

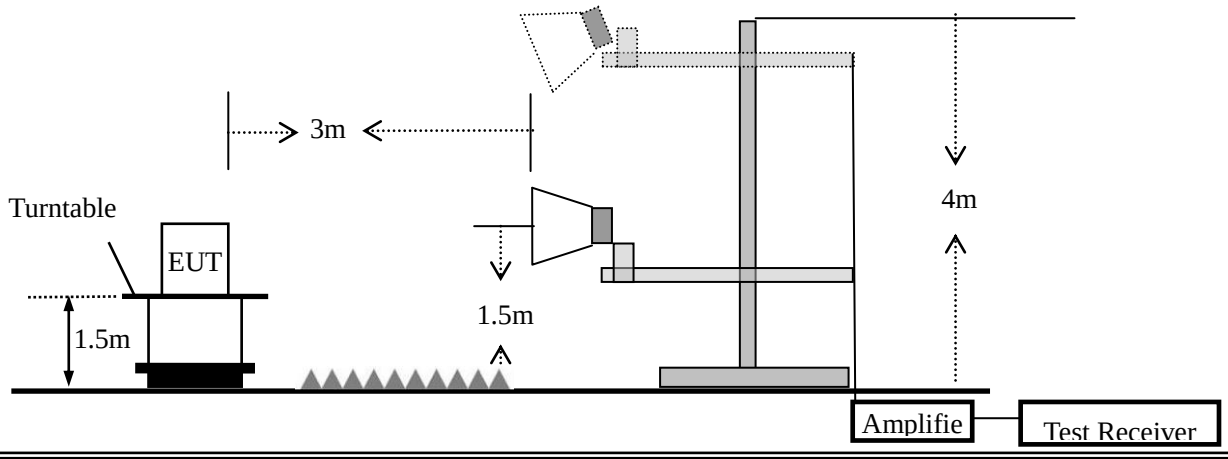

7.2.5 Test Procedure

The test site semi-anechoic chamber has met the requirement of NSA tolerance 4 dB according to the standards: ANSI C63.10-2013. The test distance is 3m.The setup is according to the requirements in Section 13.1.4.1 of ANSI C63.10-2013 and CAN/CSA-CEI/IEC CISPR 22.
This test is required for any spurious emission that falls in a Restricted Band, as defined in Section 15.205. It must be performed with the highest gain of each type of antenna proposed for use with the EUT.
Use the following spectrum analyzer settings:

Spectrum Parameter	Setting
Attenuation	Auto
Start Frequency	1000 MHz
Stop Frequency	10th carrier harmonic
RB / VB (emission in restricted band)	1 MHz / 1 MHz for Peak, 1 MHz / 10Hz for Average

Receiver Parameter	Setting
Attenuation	Auto
Start ~ Stop Frequency	9kHz~150kHz / RB 200Hz for QP
Start ~ Stop Frequency	150kHz~30MHz / RB 9kHz for QP
Start ~ Stop Frequency	30MHz~1000MHz / RB 120kHz for QP

a. The measuring distance of at 3 m shall be used for measurements at frequency up to 1GHz. For frequencies above 1GHz, any suitable measuring distance may be used.
b. The EUT was placed on the top of a rotating table 0.8 m for below 1GHz and 1.5m for above 1GHz the ground at a 3 meter. The table was rotated 360 degrees to determine the position of the highest radiation.
c. The height of the equipment or of the substitution antenna shall be 0.8 m for below 1GHz and 1.5m for above 1GHz; the height of the test antenna shall vary between 1 m to 4 m. Both horizontal and vertical polarizations of the antenna are set to make the measurement.
d. For the radiated emission test above 1GHz:
Place the measurement antenna away from each area of the EUT determined to be a source of emissions at the specified measurement distance, while keeping the measurement antenna aimed at the source of emissions at each frequency of significant emissions, with polarization oriented for maximum response. The measurement antenna may have to be higher or lower than the EUT, depending on the radiation pattern of the emission and staying aimed at the emission source for receiving the maximum signal. The final measurement antenna elevation shall be that which maximizes the emissions. The measurement antenna elevation for maximum emissions shall be restricted to a range of heights of from 1 m to 4 m above the ground or reference ground plane.
e. The initial step in collecting conducted emission data is a spectrum analyzer peak detector mode pre-scanning the measurement frequency range. Significant peaks are then marked and then Quasi Peak detector mode re-measured.
f. If the Peak Mode measured value compliance with and lower than Quasi Peak Mode Limit, the EUT shall be deemed to meet QP Limits and then no additional QP Mode measurement performed.
g. For the actual test configuration, please refer to the related Item –EUT Test Photos.

Note:

Both horizontal and vertical antenna polarities were tested
and performed pretest to three orthogonal axis. The worst case emissions were reported

During the radiated emission test, the Spectrum Analyzer was set with the following configurations:

Frequency Band (MHz)	Function	Resolution bandwidth	Video Bandwidth
30 to 1000	QP	120 kHz	300 kHz
Above 1000	Peak	1 MHz	1 MHz
	Average	1 MHz	10 Hz

Note: for the frequency ranges below 30 MHz, a narrower RBW is used for these ranges but the measured value should add a RBW correction factor (RBWCF) where RBWCF [dB] =10*lg(100 [kHz]/narrower RBW [kHz]). , the narrower RBW is 1 kHz and RBWCF is 20 dB for the frequency 9 kHz to 150 kHz, and the narrower RBW is 10 kHz and RBWCF is 10 dB for the frequency 150 kHz to 30 MHz.

7.2.6 Test Results

■ Spurious Emission below 30MHz (9KHz to 30MHz)

EUT:	Coalesce Meeting Place Edition	Model No.:	WC-COA-MPE
Temperature:	20 ℃	Relative Humidity:	48%
Test Mode:	Mode2/Mode3/Mode4	Test By:	Eileen Liu

Freq. (MHz)	Ant.Pol. H/V	Emission Level(dBuV/m)		Limit 3m(dBuV/m)		Over(dB)	
		PK	AV	PK	AV	PK	AV
--	--	--	--	--	--	--	--

Note: the amplitude of spurious emission that is attenuated by more than 20dB below the permissible limit has no need to be reported.
Distance extrapolation factor =20log(Specific distance/ test distance)(dB);
Limit line=Specific limits(dBuV) + distance extrapolation factor

■ Spurious Emission below 1GHz (30MHz to 1GHz)
All the modulation modes have been tested, and the worst result was report as below:

EUT:	Coalesce Meeting Place Edition	Model Name :	WC-COA-MPE
Temperature:	25 ℃	Relative Humidity:	50%
Pressure:	1010hPa	Test Mode:	Mode 1
Test Voltage :	DC 5V from Adapter		

Polar (H/V)	Frequency (MHz)	Meter Reading (dBuV)	Factor (dB)	Emission Level (dBuV/m)	Limits (dBuV/m)	Margin (dB)	Remark
V	30.1053	9.76	21.15	30.91	40.00	-9.09	QP
V	52.3912	19.81	13.06	32.87	40.00	-7.13	QP
V	77.8654	18.35	11.54	29.89	40.00	-10.11	QP
V	148.4410	17.25	11.30	28.55	43.50	-14.95	QP
V	194.4534	12.11	13.63	25.74	43.50	-17.76	QP
V	744.8661	15.18	22.39	37.57	46.00	-8.43	QP

Remark:
Absolute Level= ReadingLevel+ Factor, Margin= Absolute Level - Limit

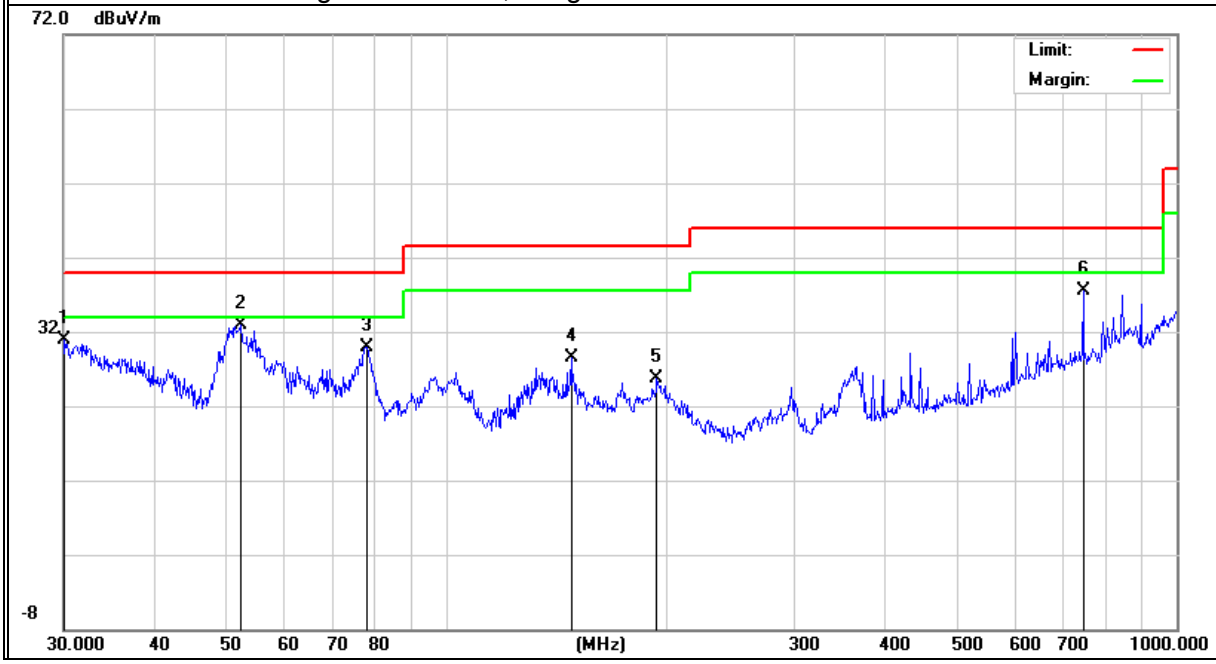

Polar (H/V)	Frequency (MHz)	Meter Reading (dBuV)	Factor (dB)	Emission Level (dBuV/m)	Limits (dBuV/m)	Margin (dB)	Remark
H	30.1052	5.17	21.15	26.32	40.00	-13.68	QP
H	72.3375	18.71	10.65	29.36	40.00	-10.64	QP
H	195.1365	12.30	13.74	26.04	43.50	-17.46	QP
H	595.1327	12.88	18.84	31.72	46.00	-14.28	QP
H	842.1295	9.56	25.68	35.24	46.00	-10.76	QP
H	993.0113	6.82	27.90	34.72	54.00	-19.28	QP

Remark:
Absolute Level= ReadingLevel+ Factor, Margin= Absolute Level - Limit

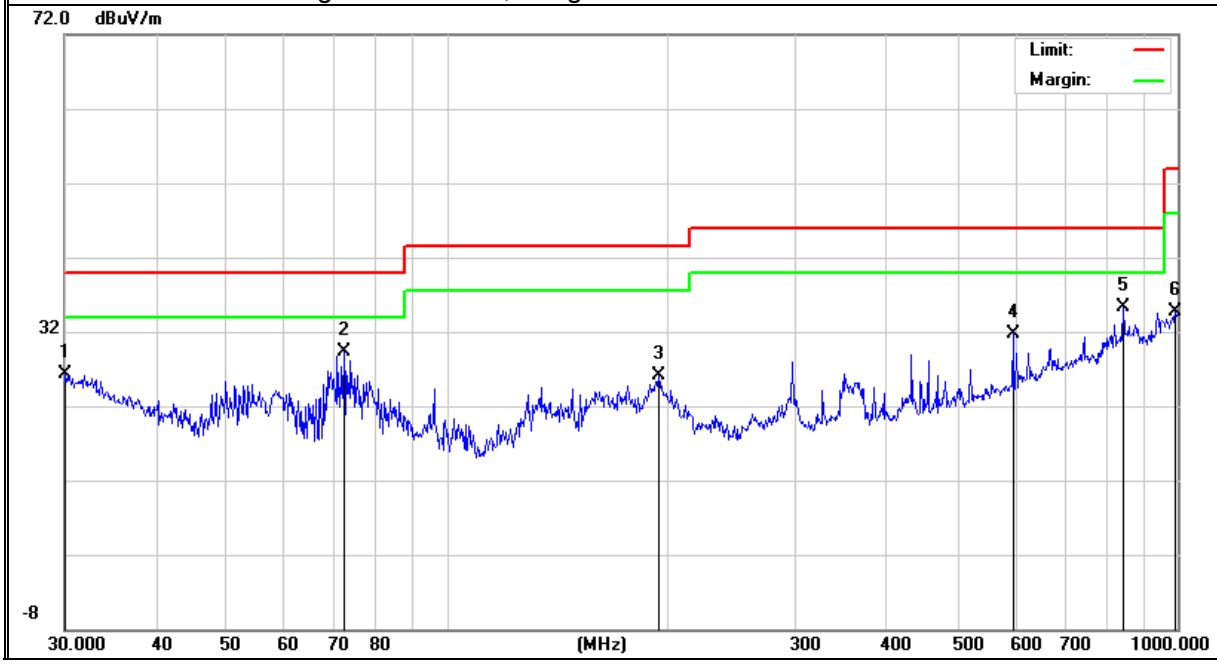

■ Spurious Emission Above 1GHz (1GHz to 25GHz)

EUT:	Coalesce Meeting Place Edition	Model No.:	WC-COA-MPE
Temperature:	20 ℃	Relative Humidity:	48%
Test Mode:	Mode2/Mode3/Mode4	Test By:	Eileen Liu

Frequency	Read Level	Cable loss	Antenna Factor	Preamp Factor	Emission Level	Limits	Margin	Remark	Comment
(MHz)	(dBμV)	(dB)	dB/m	(dB)	(dBμV/m)	(dBμV/m)	(dB)		
Low Channel (2402 MHz)-Above 1G									
4804.125	66.59	5.21	35.59	44.30	63.09	74.00	-10.91	Pk	Vertical
4804.125	47.41	5.21	35.59	44.30	43.91	54.00	-10.09	AV	Vertical
7206.296	65.52	6.48	36.27	44.60	63.67	74.00	-10.33	Pk	Vertical
7206.296	46.98	6.48	36.27	44.60	45.13	54.00	-8.87	AV	Vertical
4804.204	64.13	5.21	35.55	44.30	60.59	74.00	-13.41	Pk	Horizontal
4804.204	46.78	5.21	35.55	44.30	43.24	54.00	-10.76	AV	Horizontal
7206.413	66.95	6.48	36.27	44.52	65.18	74.00	-8.82	Pk	Horizontal
7206.413	44.04	6.48	36.27	44.52	42.27	54.00	-11.73	AV	Horizontal
Mid Channel (2440 MHz)-Above 1G									
4882.067	65.28	5.21	35.66	44.20	61.95	74.00	-12.05	Pk	Vertical
4882.067	45.91	5.21	35.66	44.20	42.58	54.00	-11.42	AV	Vertical
7323.15	62.23	7.10	36.50	44.43	61.40	74.00	-12.60	Pk	Vertical
7323.15	46.67	7.10	36.50	44.43	45.84	54.00	-8.16	AV	Vertical
4882.197	64.15	5.21	35.66	44.20	60.82	74.00	-13.18	Pk	Horizontal
4882.197	47.97	5.21	35.66	44.20	44.64	54.00	-9.36	AV	Horizontal
7323.401	62.52	7.10	36.50	44.43	61.69	74.00	-12.31	Pk	Horizontal
7323.401	43.96	7.10	36.50	44.43	43.13	54.00	-10.87	AV	Horizontal
High Channel (2480 MHz)- Above 1G									
4960.112	65.54	5.21	35.52	44.21	62.06	74.00	-11.94	Pk	Vertical
4960.112	47.41	5.21	35.52	44.21	43.93	54.00	-10.07	AV	Vertical
7440.263	64.59	7.10	36.53	44.60	63.62	74.00	-10.38	Pk	Vertical
7440.263	46.85	7.10	36.53	44.60	45.88	54.00	-8.12	AV	Vertical
4960.172	62.52	5.21	35.52	44.21	59.04	74.00	-14.96	Pk	Horizontal
4960.172	43.31	5.21	35.52	44.21	39.83	54.00	-14.17	AV	Horizontal
7440.342	62.96	7.10	36.53	44.60	61.99	74.00	-12.01	Pk	Horizontal
7440.342	45.51	7.10	36.53	44.60	44.54	54.00	-9.46	AV	Horizontal

Note: (1) All Readings are Peak Value (VBW=3MHz) and AV Value (VBW=10Hz).
(2) Emission Level= Antenna Factor + Cable Loss + Read Level - Preamp Factor
(3)All other emissions more than 20dB below the limit.

■ Spurious Emission in Restricted Band 2310-2390MHz and 2483.5-2500MHz

EUT:	Coalesce Meeting Place Edition	Model No.:	WC-COA-MPE
Temperature:	20 ℃	Relative Humidity:	48%
Test Mode:	Mode2/ Mode4	Test By:	Eileen Liu

Frequency	Meter Reading	Cable Loss	Antenna Factor	Preamp Factor	Emission Level	Limits	Margin	Detector	Comment
(MHz)	(dBμV)	(dB)	dB/m	(dB)	(dBμV/m)	(dBμV/m)	(dB)	Type	
GFSK									
2310.00	62.59	2.97	27.80	43.80	49.56	74	-24.44	Pk	Horizontal
2310.00	44.51	2.97	27.80	43.80	31.48	54	-22.52	AV	Horizontal
2310.00	64.35	2.97	27.80	43.80	51.32	74	-22.68	Pk	Vertical
2310.00	46.63	2.97	27.80	43.80	33.60	54	-20.4	AV	Vertical
2390.00	62.98	3.14	27.21	43.80	49.53	74	-24.47	Pk	Vertical
2390.00	43.19	3.14	27.21	43.80	29.74	54	-24.26	AV	Vertical
2390.00	63.07	3.14	27.21	43.80	49.62	74	-24.38	Pk	Horizontal
2390.00	44.18	3.14	27.21	43.80	30.73	54	-23.27	AV	Horizontal
2483.50	64.48	3.58	27.70	44.00	51.76	74	-22.24	Pk	Vertical
2483.50	43.96	3.58	27.70	44.00	31.24	54	-22.76	AV	Vertical
2483.50	61.97	3.58	27.70	44.00	49.25	74	-24.75	Pk	Horizontal
2483.50	43.65	3.58	27.70	44.00	30.93	54	-23.07	AV	Horizontal

Note: (1) All other emissions more than 20dB below the limit.

■ Spurious Emission in Restricted Band 3260MMHz-18000MHz

EUT:	Coalesce Meeting Place Edition	Model No.:	WC-COA-MPE
Temperature:	20 ℃	Relative Humidity:	48%
Test Mode:	Mode2/ Mode4	Test By:	Eileen Liu

Frequency	Reading Level	Cable Loss	Antenna	Preamp Factor	Emission Level	Limits	Margin	Detector	Comment
(MHz)	(dBμV)	(dB)	dB/m	(dB)	(dBμV/m)	(dBμV/m)	(dB)	Type	
3260	65.13	4.04	29.57	44.70	54.04	74	-19.96	Pk	Vertical
3260	49.98	4.04	29.57	44.70	38.89	54	-15.11	AV	Vertical
3260	66.33	4.04	29.57	44.70	55.24	74	-18.76	Pk	Horizontal
3260	47.84	4.04	29.57	44.70	36.75	54	-17.25	AV	Horizontal
3332	65.59	4.26	29.87	44.40	55.32	74	-18.68	Pk	Vertical
3332	48.19	4.26	29.87	44.40	37.92	54	-16.08	AV	Vertical
3332	64.53	4.26	29.87	44.40	54.26	74	-19.74	Pk	Horizontal
3332	46.67	4.26	29.87	44.40	36.40	54	-17.60	AV	Horizontal
17797	48.95	10.99	43.95	43.50	60.39	74	-13.61	Pk	Vertical
17797	32.65	10.99	43.95	43.50	44.09	54	-9.91	AV	Vertical
17788	48.14	11.81	43.69	44.60	59.04	74	-14.96	Pk	Horizontal
17788	30.59	11.81	43.69	44.60	41.49	54	-12.51	AV	Horizontal

Note: (1) All other emissions more than 20dB below the limit.

7.3 6DB BANDWIDTH

7.3.1 Applicable Standard

According to FCC Part 15.247(a)(2) and KDB 558074 DTS 01 Meas. Guidance v04

7.3.2 Conformance Limit

The minimum permissible 6dB bandwidth is 500 kHz.

7.3.3 Measuring Instruments

The Measuring equipment is listed in the section 6.3 of this test report.

7.3.4 Test Setup

Please refer to Section 6.1 of this test report.

7.3.5 Test Procedure

The testing follows KDB 558074 DTS 01 Meas. Guidance v04
The RF output of EUT was connected to the spectrum analyzer by RF cable and attenuator.
The path loss was compensated to the results for each measurement.
Set to the maximum power setting and enable the EUT transmit continuously.
The EUT was operating in controlled its channel.
Use the following spectrum analyzer settings:

a) Set RBW = 100 kHz.
b) Set the video bandwidth (VBW) ≥ 3 □ RBW.
c) Detector = Peak.
d) Trace mode = max hold.
e) Sweep = auto couple.
f) Allow the trace to stabilize.
g) Measure the maximum width of the emission that is constrained by the frequencies associated with the two outermost amplitude points (upper and lower frequencies) that are attenuated by 6 dB relative to the maximum level measured in the fundamental emission.

7.3.6 Test Results

EUT:	Coalesce Meeting Place Edition	Model No.:	WC-COA-MPE
Temperature:	20 ℃	Relative Humidity:	48%
Test Mode:	Mode2/Mode3/Mode4	Test By:	Eileen Liu

Channel	Frequency (MHz)	6dB bandwidth (kHz)	Limit (kHz)	Result
Low	2402	720.0	⩾500	Pass
Middle	2440	719.3	⩾500	Pass
High	2480	721.2	⩾500	Pass

6dB Bandwidth plot on channel 00	1Mbps

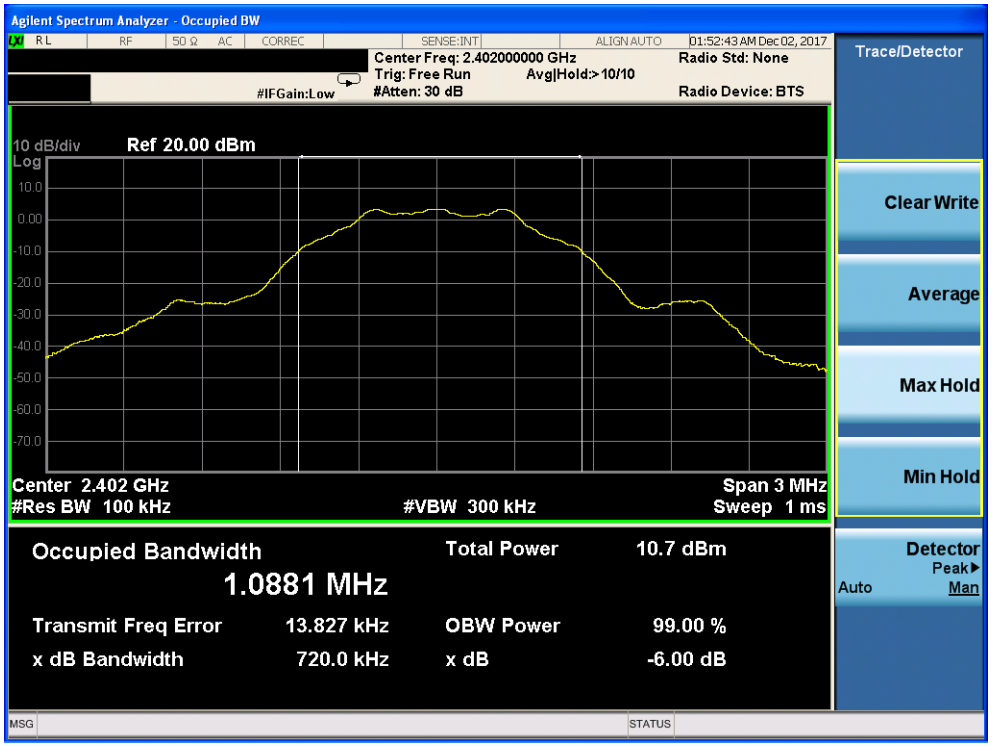

6dB Bandwidth plot on channel 19	1Mbps

6dB Bandwidth plot on channel 39	1Mbps

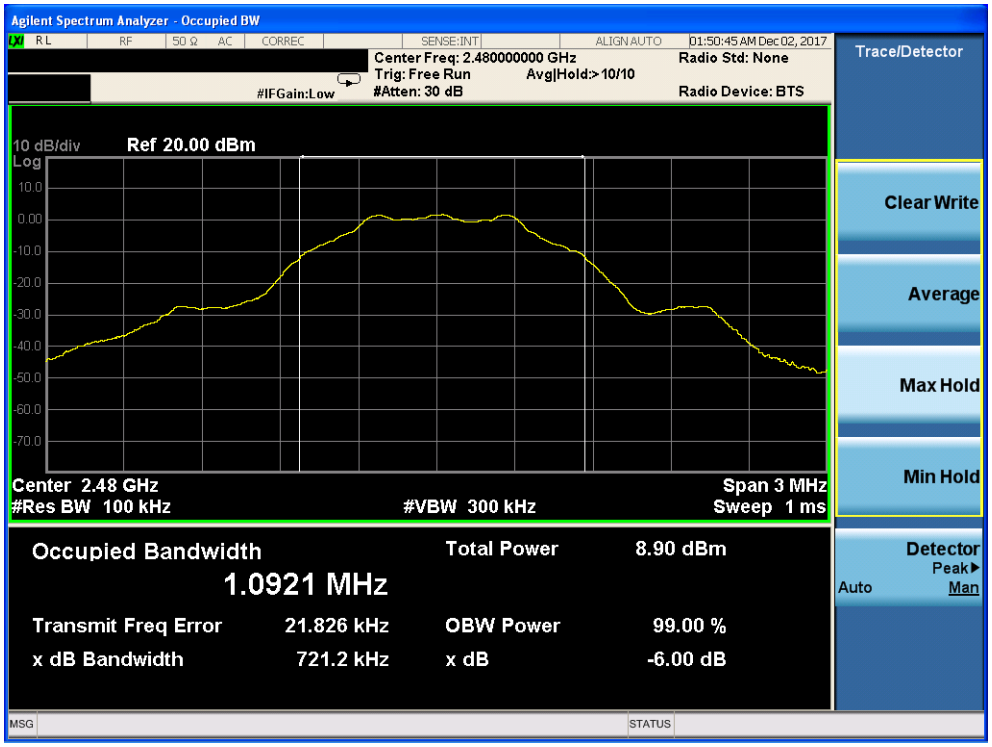

7.4 PEAK OUTPUT POWER

7.4.1 Applicable Standard

According to FCC Part 15.247(b)(3) and KDB 558074 DTS 01 Meas. Guidance v04

7.4.2 Conformance Limit

The maximum peak conducted output power of the intentional radiator for systems using digital modulation in the 2400 - 2483.5 MHz bands shall not exceed: 1 Watt (30dBm). If transmitting antenna of directional gain greater than 6dBi is used, the peak output power from the intentional radiator shall be reduced below the above stated value by the amount in dB that the directional gain of the antenna exceeds 6 dBi. In case of point-to-point operation, the limit has to be reduced by 1dB for every 3dB that the directional gain of the antenna exceeds 6dBi.

7.4.3 Measuring Instruments

The Measuring equipment is listed in the section 6.3 of this test report.

7.4.4 Test Setup

Please refer to Section 6.1 of this test report.

7.4.5 Test Procedure

The testing follows KDB 558074 DTS 01 Meas. Guidance v04
The RF output of EUT was connected to the spectrum analyzer by RF cable and attenuator.
The path loss was compensated to the results for each measurement.
Set to the maximum power setting and enable the EUT transmit continuously.
The EUT was operating in controlled its channel.
Use the following spectrum analyzer settings:
Set the RBW ≧DTS bandwidth.
Set VBW =3*RBW.
Set the span ≧3*RBW
Set Sweep time = auto couple.
Set Detector = peak.
Set Trace mode = max hold.
Allow trace to fully stabilize.
Use peak marker function to determine the peak amplitude level.

7.4.6 Test Results

EUT:	Coalesce Meeting Place Edition	Model No.:	WC-COA-MPE
Temperature:	20 ℃	Relative Humidity:	48%
Test Mode:	Mode2/Mode3/Mode4	Test By:	Eileen Liu

Test Channel	Frequency (MHz)	Power Setting	Peak Output Power (dBm)	LIMIT (dBm)	Verdict
1Mbps					
00	2402	Default	4.173	30	PASS
19	2440	Default	3.328	30	PASS
39	2480	Default	2.321	30	PASS

Peak output Power plot on channel 00	1Mbps

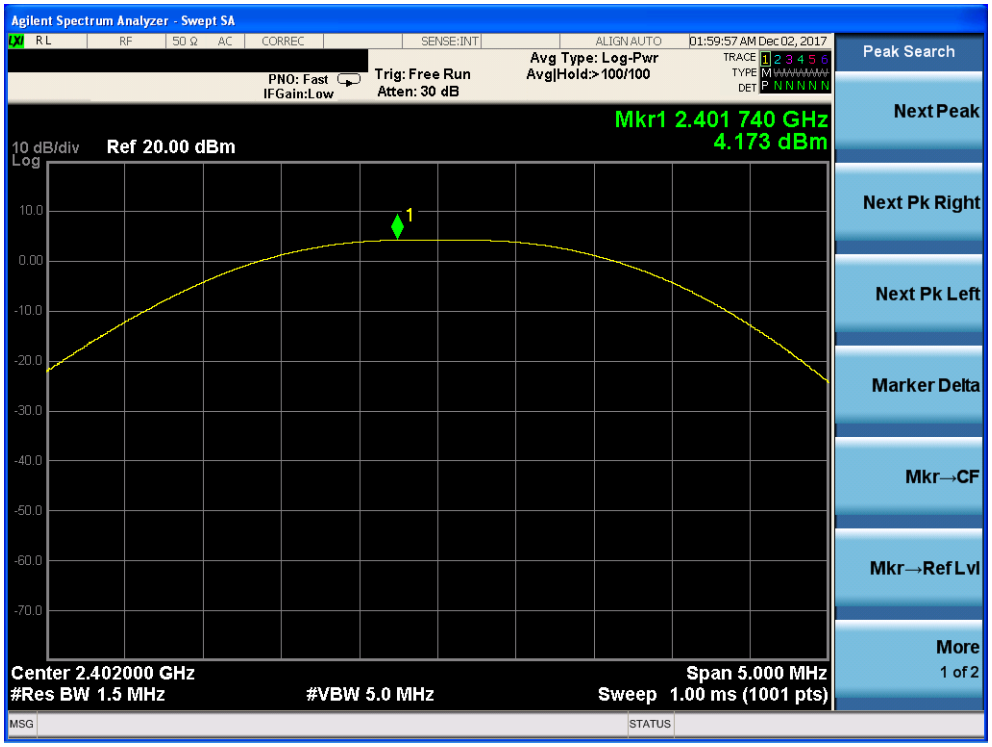

Peak output Power plot on channel 19	1Mbps

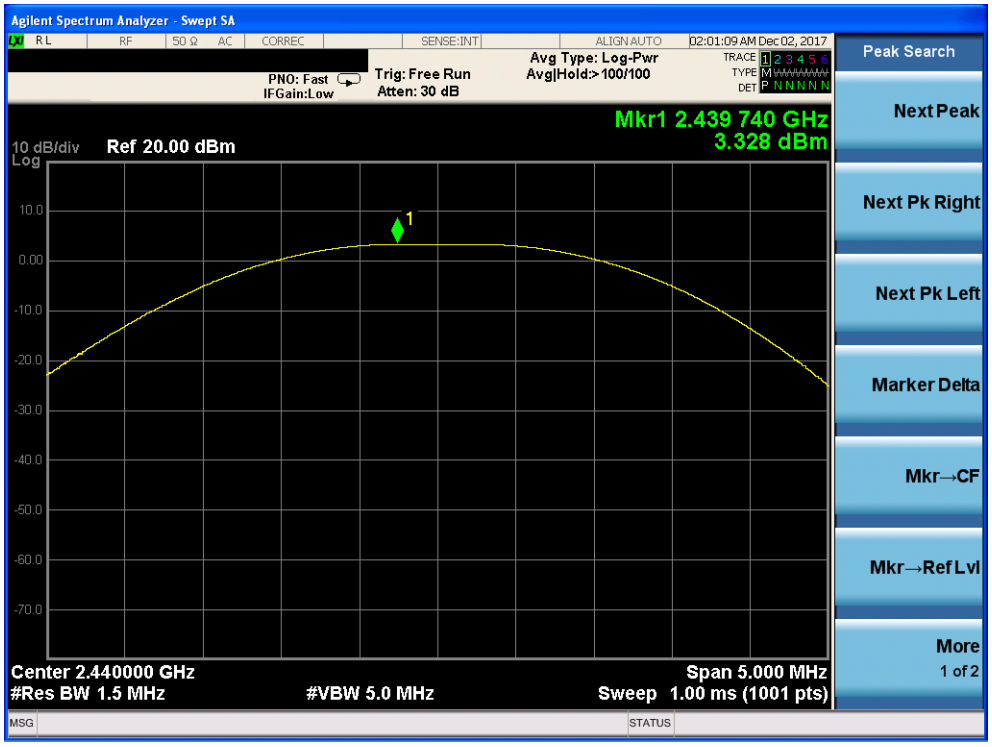

Peak output Power plot on channel 39	1Mbps

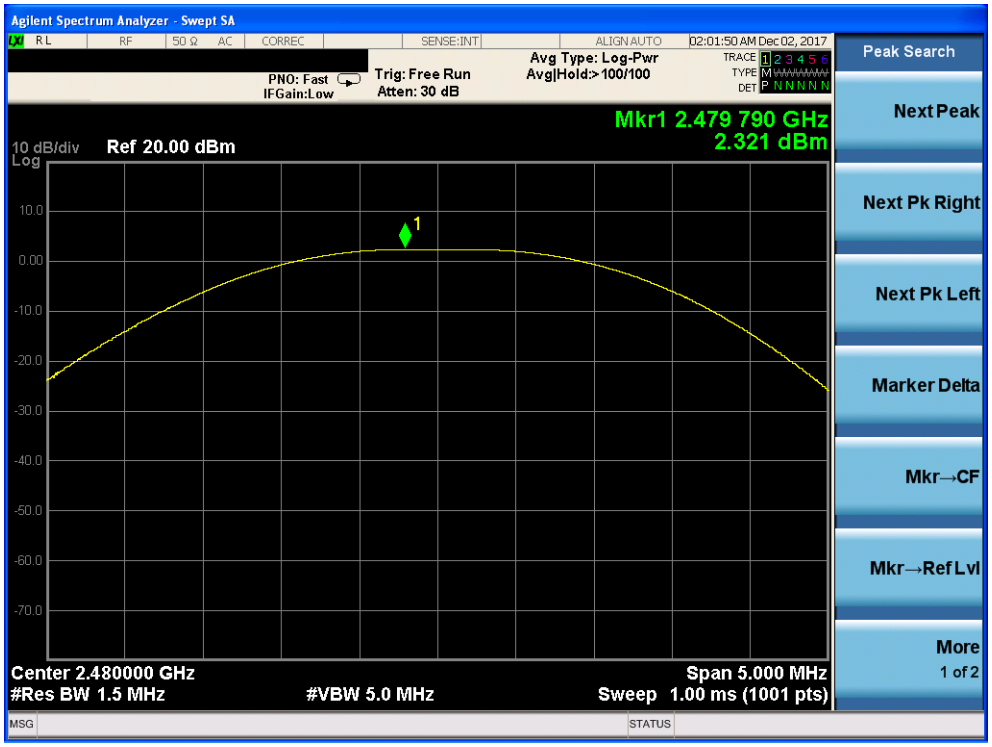

7.5 POWER SPECTRAL DENSITY

7.5.1 Applicable Standard

According to FCC Part 15.247(e) and KDB 558074 DTS 01 Meas. Guidance v04

7.5.2 Conformance Limit

The transmitter power spectral density conducted from the transmitter to the antenna shall not be greater than 8 dBm in any 3 kHz band during any time interval of continuous transmission.

7.5.3 Measuring Instruments

The Measuring equipment is listed in the section 6.3 of this test report.

7.5.4 Test Setup

Please refer to Section 6.1 of this test report.

7.5.5 Test Procedure

The testing follows Measurement Procedure 10.3 Method AVGPSD of FCC KDB Publication No. 558074 D01 DTS Meas. Guidance v04
This procedure may be used when the maximum (average) conducted output power was used to demonstrate compliance to the output power limit. This is the baseline method for determining the maximum (average) conducted PSD level. If the instrument has an RMS power averaging detector, it must be used; otherwise, use the sample detector. The EUT must be configured to transmit continuously (duty cycle ≥ 98%); otherwise sweep triggering/signal gating must be implemented to ensure that measurements are made only when the EUT is transmitting at its maximum power control level (no transmitter off time is to be considered).
The RF output of EUT was connected to the spectrum analyzer by RF cable and attenuator.
The path loss was compensated to the results for each measurement.
Set to the maximum power setting and enable the EUT transmit continuously.
The EUT was operating in controlled its channel.
a) Set instrument center frequency to DTS channel center frequency.
b) Set the span to 1.5 times DTS bandwidth.
c) Set RBW to: 3 kHz ≤ RBW ≤ 100kHz. .
d) Set VBW ≥3 x RBW.
e) Detector = power averaging (RMS) or sample detector (when RMS not available).
f) Ensure that the number of measurement points in the sweep ≥ 2 x span/RBW.
g) Sweep time = auto couple.
h) Employ trace averaging (RMS) mode over a minimum of 100 traces.
i) Use the peak marker function to determine the maximum amplitude level.
j) If measured value exceeds limit, reduce RBW (no less than 3 kHz) and repeat (note that this may require zooming in on the emission of interest and reducing

7.5.6 Test Results

EUT:	Coalesce Meeting Place Edition	Model No.:	WC-COA-MPE
Temperature:	20 ℃	Relative Humidity:	48%
Test Mode:	Mode2/Mode3/Mode4	Test By:	Eileen Liu

Test Channel	Frequency (MHz)	Power Density (dBm/3KHz)	Limit (dBm/3KHz)	Verdict
1Mbps				
00	2402	-9.739	8	PASS
19	2440	-10.628	8	PASS
39	2480	-11.718	8	PASS

Power spectral density plot on channel 00	1Mbps

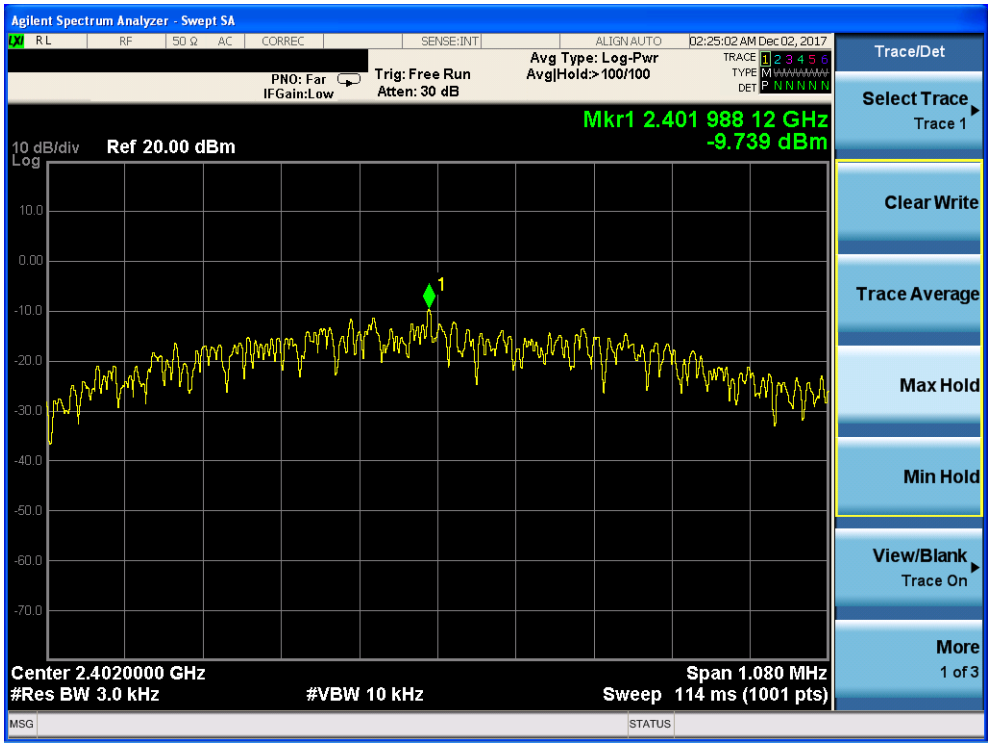

Power spectral density plot on channel 19	1Mbps

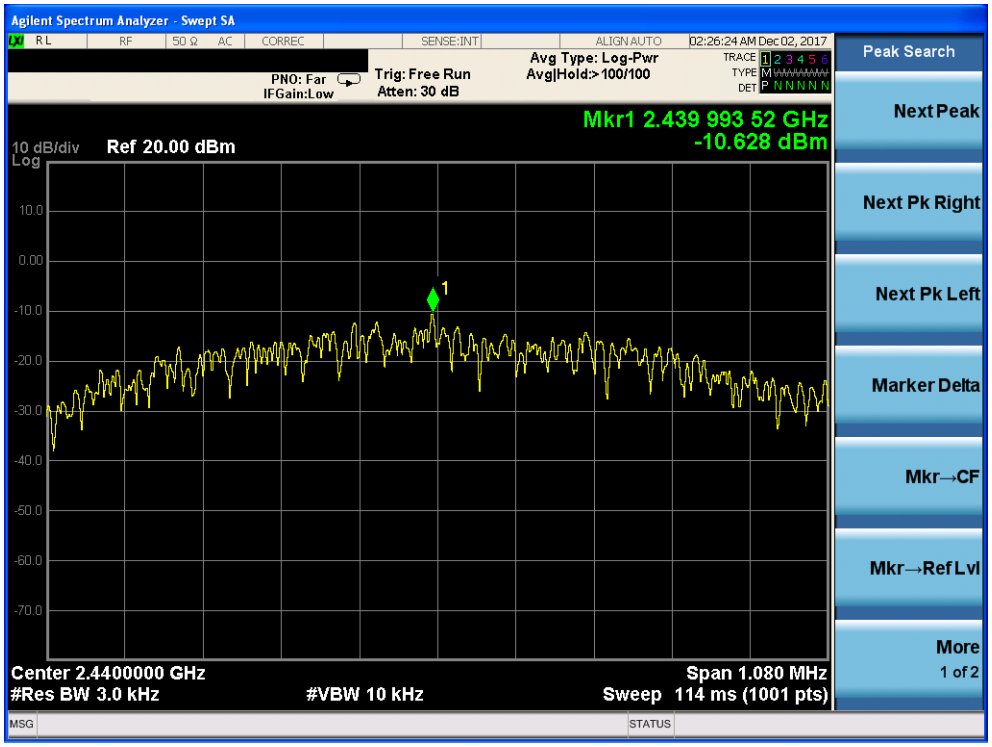

Power spectral density plot on channel 39	1Mbps

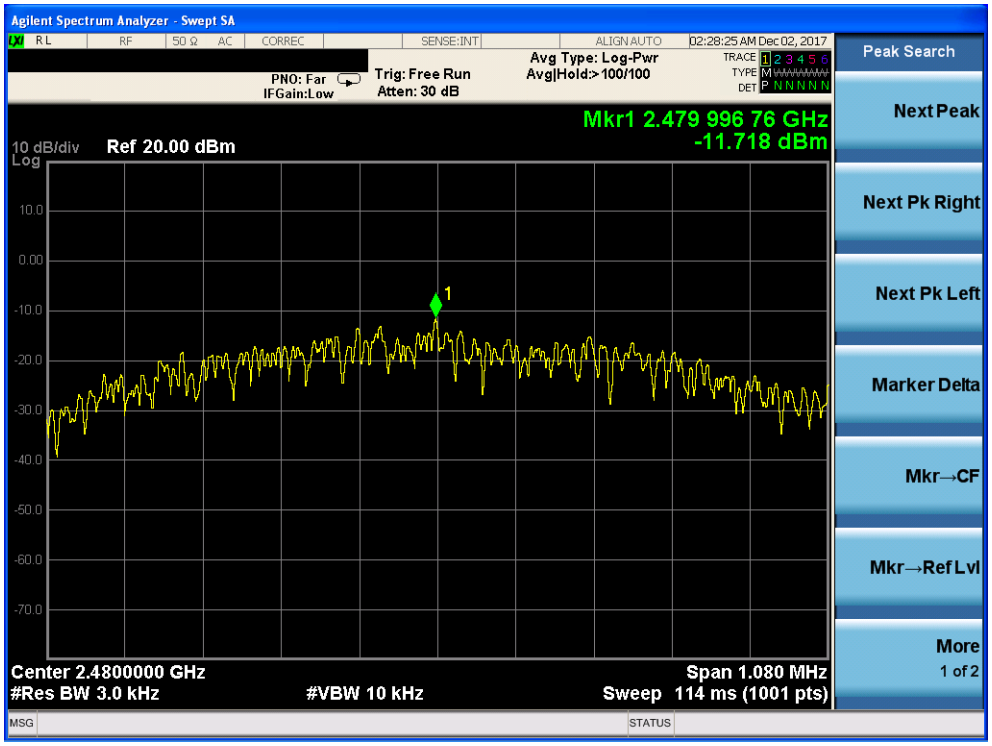

7.6 CONDUCTED BAND EDGE MEASUREMENT

7.6.1 Applicable Standard

According to FCC Part 15.247(d) and KDB 558074 DTS 01 Meas. Guidance v04

7.6.2 Conformance Limit

In any 100 kHz bandwidth outside the frequency band in which the spread spectrum or digitally modulated intentional radiator is operating, the radio frequency power that is produced by the intentional radiator shall be at least 20 dB below that in the 100 kHz bandwidth within the band that contains the highest level of the desired power, based on either an RF conducted or a radiated measurement, provided the transmitter demonstrates compliance with the peak conducted power limits. If the transmitter complies with the conducted power limits based on the use of RMS averaging over a time interval, as permitted under paragraph (b)(3) of this section, the attenuation required under this paragraph shall be 30 dB instead of 20 dB.

7.6.3 Measuring Instruments

The Measuring equipment is listed in the section 6.3 of this test report.

7.6.4 Test Setup

Please refer to Section 6.1 of this test report.

7.6.5 Test Procedure

The testing follows FCC KDB Publication No. 558074 D01 DTS Meas. Guidance v04.
The RF output of EUT was connected to the spectrum analyzer by RF cable and attenuator.
The path loss was compensated to the results for each measurement.
Set to the maximum power setting and enable the EUT transmit continuously.
The EUT was operating in controlled its channel.
Set RBW to 100 kHz and VBW of spectrum analyzer to 300 kHz with a convenient frequency span including 100 kHz bandwidth from band edge.
Measure the highest amplitude appearing on spectral display and set it as a reference level. Plot the graph with marking the highest point and edge frequency.
Repeat above procedures until all measured frequencies were complete.

7.6.6 Test Results

EUT:	Coalesce Meeting Place Edition	Model No.:	WC-COA-MPE
Temperature:	20 ℃	Relative Humidity:	48%
Test Mode:	Mode2/Mode4	Test By:	Eileen Liu

GFSK mode: Band Edge-Low Channel

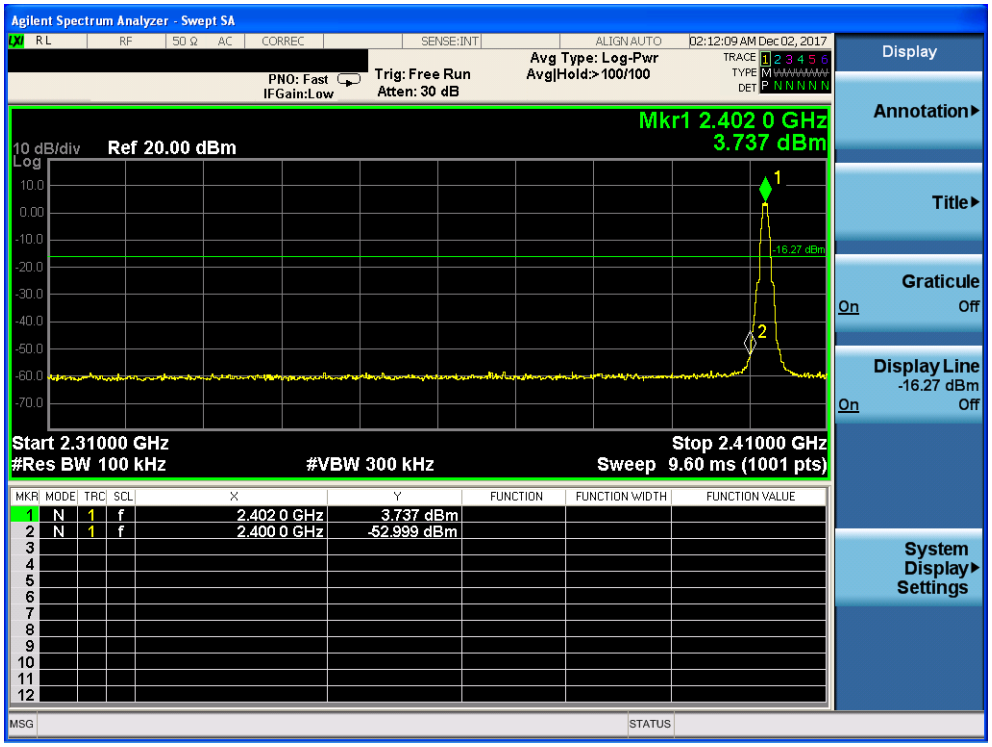

GFSK mode: Band Edge-High Channel

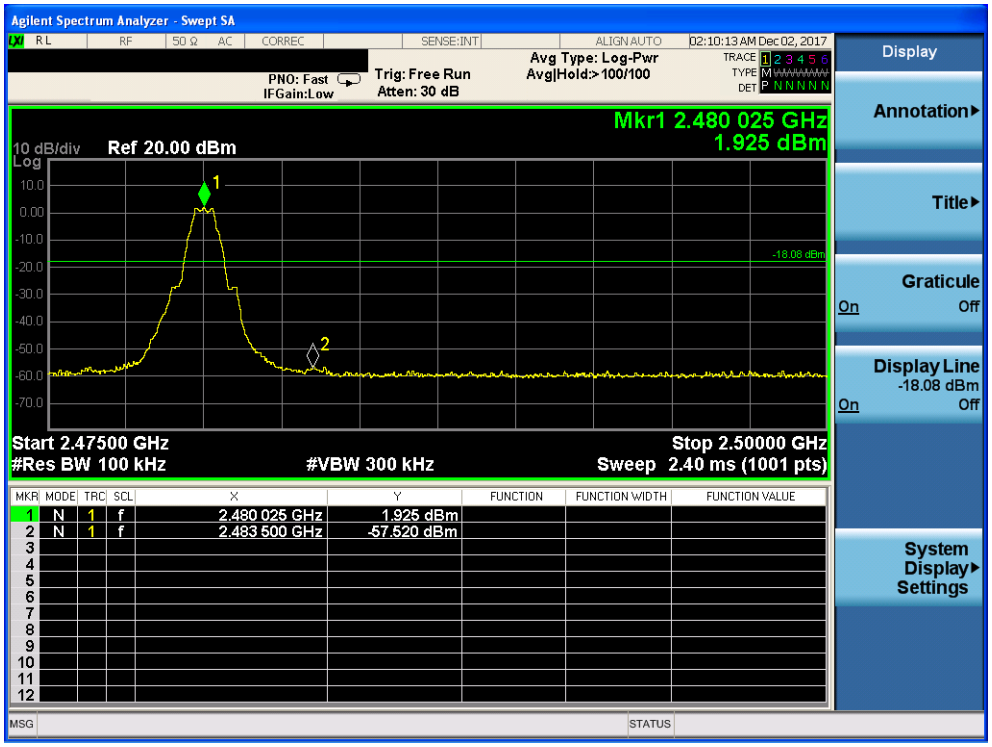

7.7 SPURIOUS RF CONDUCTED EMISSIONS

7.7.1 Conformance Limit

1. Below -20dB of the highest emission level in operating band.
2. Fall in the restricted bands listed in section 15.205. The maximum permitted average field strength is listed in section 15.209.

7.7.2 Measuring Instruments

The Measuring equipment is listed in the section 6.3 of this test report.

7.7.3 Test Setup

Please refer to Section 6.1 of this test report.

7.7.4 Test Procedure

The Spurious RF conducted emissions compliance of RF radiated emission should be measured by following the guidance in ANSI C63.10-2013 with respect to maximizing the emission by rotating the EUT, measuring the emission while the EUT is situated in three orthogonal planes (if appropriate), adjusting the measurement antenna height and polarization etc. Set RBW=100kHz and VBW= 300KHz to measure the peak field strength , and measure frequeny range from 9KHz to 26.5GHz.

7.7.5 Test Results

Remark: The measurement frequency range is from 9KHz to the 10th harmonic of the fundamental frequency. The lowest, middle and highest channels are tested to verify the spurious emissions and bandege measurement data.

Test Plot

GFSK on channel 00

GFSK on channel 00

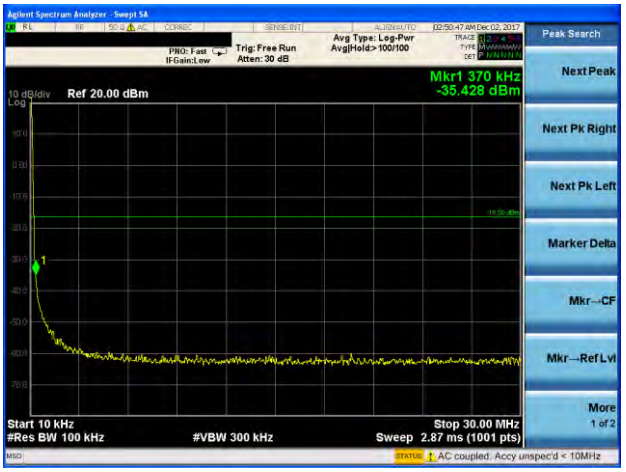

GFSK on channel 00

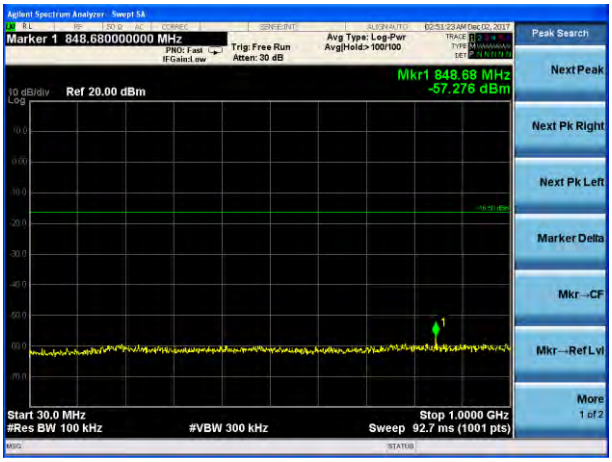

GFSK on channel 00

Test Plot

GFSK on channel 19

GFSK on channel 19

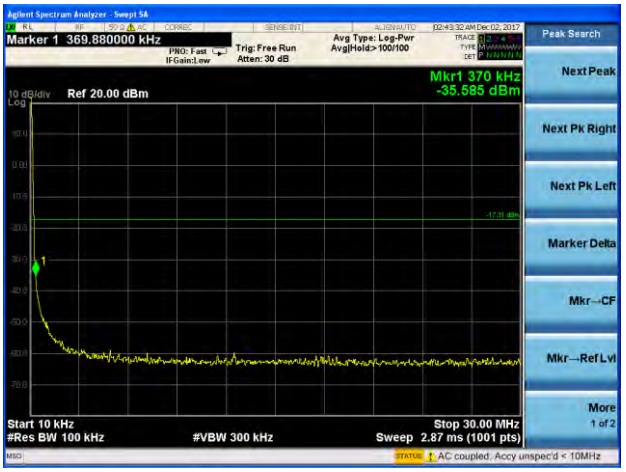

GFSK on channel 19

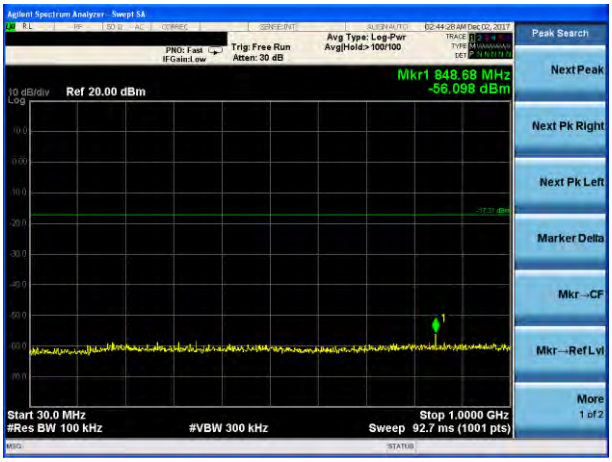

GFSK on channel 19

Test Plot

GFSK on channel 39

GFSK on channel 39

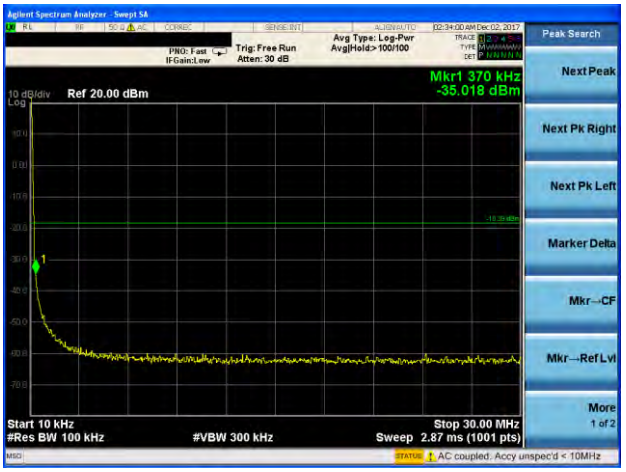

GFSK on channel 39

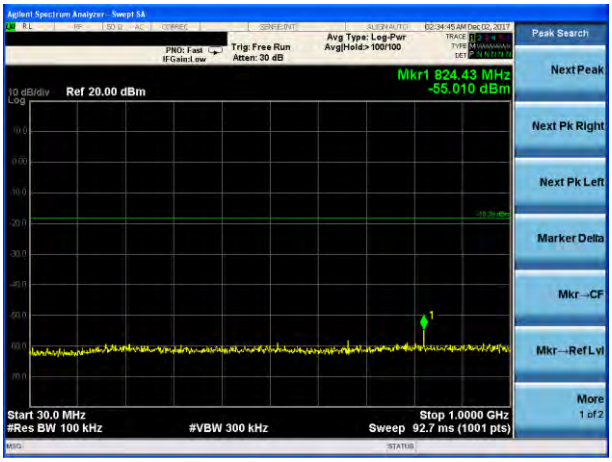

GFSK on channel 39

7.8 ANTENNA APPLICATION

7.8.1 Antenna Requirement

15.203 requirement: For intentional device, according to 15.203: an intentional radiator shall be designed to ensure that no antenna other than that furnished by the responsible party shall be used with the device.

7.8.2 Result

The EUT antenna is permanent attached PIFA antenna(Gain:3.73dBi). It comply with the standard requirement.

END OF REPORT