Operating Manual

System

FUJITSU LIFEBOOK T904

FUJITSU

Contact address in North America

FUJITSU AMERICA INC:

1250 East Arques Avenue Sunnyvale

CA 94085-3470, U.S.A.

Telephone: 800 831 3183 or 408 746 6000

"http://solutions.us.fujitsu.com"

"http://solutions.us.fujitsu.com/contact"

Have a question? Email us at: "AskFujitsu@us.fujitsu.com"

Copyright

© 2014 Fujitsu America, Inc. All rights reserved.

B5FK-2451-01ENZ0

FUJITSU LIFEBOOK T904

Operating Manual

Fujitsu Contact Information	**7**
Notational conventions	**8**
Ports and controls	**9**
Important notes	**12**
First-time setup of your device	**17**
Working with the notebook	**21**
Security functions	**63**
Connecting external devices	**72**
Removing and installing components during servicing	**78**
Settings in BIOS Setup Utility	**79**
Troubleshooting and tips	**81**
Technical data	**90**
Manufacturer's notes	**95**
Appendix	**101**
Index	**117**

Copyright and Trademark Information

Fujitsu America, Incorporated has made every effort to ensure the accuracy and completeness of this document; however, as ongoing development efforts are continually improving the capabilities of our products, we cannot guarantee the accuracy of the contents of this document. We disclaim liability for errors, omissions, or future changes.

Fujitsu, the Fujitsu logo and LIFEBOOK are registered trademarks of Fujitsu Limited or its subsidiaries in the United States and other countries.

Intel and Intel Core are trademarks or registered trademarks of Intel Corporation or its subsidiaries in the United States and other countries.

Microsoft and Windows are either registered trademarks or trademarks of Microsoft Corporation in the United States and/or other countries.

The ExpressCard word mark and logo are owned by the Personal Computer Memory Card International Association (PCMCIA) and any use of such marks by Fujitsu America, Incorporated is under license.

Google is a trademark or registered trademark of Google Incorporated.

Bluetooth is a trademark of Bluetooth SIG, Inc., USA.

OmniPass is a trademark of Softex, Inc.

Roxio is a trademark of Roxio, a division of Sonic Solutions.

PowerDirector, PowerDVD, YouCam, and MakeDisc are trademarks of CyberLink Corp.

Adobe, Acrobat, and Adobe Reader are either a reg istered trademarks or trademarks of Adobe Systems Incorporated in the United States and/or other countries.

Made under license from DTS Licensing Limited. DTS and the symbol are registered trademarks and & DTS Boost is a trademark of DTS, Inc. Product contains software. © DTS, Inc. All rights reserved.

The DVD player found in some models of the LIFEBOOK notebook incorporates copyright protection technology that is protected by method claims of certain U.S. patents and other intellectual property rights owned by Macrovision Corporation and other rights users. Use of this copyright protection technology must be authorized by Macrovision Corporation, and is intended for home and other limited viewing uses only unless authorized by Macrovision Corporation. Reverse engineering or disassembly is prohibited.

All other trademarks specified here are the property of their respective owners.

Contents

Fujitsu Contact Information **7**

Notational conventions **8**

Ports and controls **9**

Important notes **12**
Safety instructions 12
Additional safety notes for devices with radio components 13
Energy saving 13
Energy saving under Windows 13
Traveling with your notebook 14
Before you travel 14
Transporting the Tablet PC 15
Storing your Tablet PC 15
Cleaning the Tablet PC 16
Further information on cleaning the Tablet PC 16

First-time setup of your device **17**
Unpacking and checking the device 17
Choose a location 18
Connecting the AC adapter 18
Switching on the device for the first time 19
Installing Bonus Apps 20

Working with the notebook **21**
Status indicators 21
Opening the notebook 23
Switching the notebook on 24
Programing the ON/OFF button 24
Different ways to use your notebook 25
From notebook to Tablet PC 25
Select display orientation (portrait or landscape format) 27
From Tablet PC to notebook 28
Switching off the notebook 29
Closing the notebook 30
Handwriting recognition 30
LCD screen 31
Ambient light sensor 31
Using a device as a tablet PC 32
Using your fingers 32
Using the stylus 35
Using the device as a notebook 39
Clickpad and Clickpad buttons 39
Keyboard 41
Virtual number keys 43
Country and keyboard settings 43
Key combinations 44
Tablet buttons 46
Webcam 47
Rechargeable battery 48
Charging, caring for and maintaining the battery 48

Removing and installing the battery 48
Using the energy saving functions 52
Memory cards 53
Supported format 53
Inserting the memory card 53
Removing the memory card 53
Speaker and microphone 54
SIM card 54
Inserting a SIM card 54
Removing a SIM card 55
Optional wireless LAN/Bluetooth/4G radio components 55
Switching the wireless components on and off 55
Setting up WLAN access 56
Further information on WLAN and Bluetooth 56
Access via 4G 56
Ethernet and LAN 57
Your port replicator (optional) 58
Ports on the port replicator 58
Setting up the port replicator 59
Connecting the notebook to the port replicator 60
Switching on the notebook via the port replicator 61
Switching off notebook via port replicator 61
Disconnecting the notebook from the port replicator 62

Security functions 63
Brief overview of the security functions 64
Configuring the fingerprint sensor 65
Using the Security Lock 65
Configuring password protection in BIOS Setup Utility 66
Protecting BIOS Setup Utility (supervisor HDD password and user HDD password) 66
Password protection for booting the operating system 67
Password protection for the hard disk 68
SmartCard reader 69
Inserting the SmartCard 69
Using the security function of the tablet buttons 69
Assigning the supervisor password 69
Assigning the user password 70
Entering passwords via the tablet buttons 70
Trusted Platform Module - TPM (device dependent) 71
Enabling TPM 71
Disabling TPM 71

Connecting external devices 72
HDMI port 73
Connecting an external monitor to the port replicator 74
Connecting USB devices 75
USB port with charging function (Anytime USB charge) 76
How to remove USB devices correctly 76
Headphones port 77

Removing and installing components during servicing 78

Settings in BIOS Setup Utility 79
Starting the BIOS Setup Utility 79

BIOS Setup Utility operation 79
Exiting BIOS Setup Utility 80
Exit Saving Changes - save changes and exit BIOS Setup Utility 80
Exit Discarding Changes - Reject changes and exit BIOS Setup Utility 80
Load Setup Defaults – load default values 80
Discard Changes - Discard Changes without exiting BIOS Setup Utility 80
Save Changes - save changes without exiting the BIOS Setup Utility 80
Save changes and power off 80

Troubleshooting and tips 81
Help if problems occur 81
Recovering your Factory Image 81
The notebook's date or time is incorrect 82
Battery indicator does not illuminate 82
When certain characters are entered on the keyboard, only numerals are written 82
The notebook's LCD screen remains blank 82
The LCD screen of the notebook is difficult to read 83
The external monitor remains blank 83
The external monitor is blank or the image is unstable 83
The cursor does not correctly follow the stylus movements 84
Stylus input not working 84
The notebook does not start after switching it on 84
The notebook stops working 85
The printer does not print 85
The wireless connection to a network does not work 85
The battery discharges too quickly 86
SmartCard reader is not recognized 86
SmartCard PIN forgotten 86
SmartCard lost 86
User and/or supervisor SmartCard lost 87
Acoustic warning 87
Error messages on the screen 88

Technical data 90
Notebook 90
WLAN specifications 92
Port replicator (optional) 93
Rechargeable battery 93
AC adapter for use with notebook and port replicator 94

Manufacturer's notes 95
Disposal and recycling 95
Recycling your battery 95
DOC (Industry CANADA) Notices 95
UL Notice 96
ENERGY STAR Compliance 97
Declarations of Conformity 97
FCC and IC Regulatory Information 98
Regulatory Notes and Statements 98

Appendix 101
Before Using the Optional Wireless LAN 101
Wireless LAN Devices Covered by this Document 101
Characteristics of the WLAN Device 101

Wireless LAN Modes Using this Device 102
Deactivating/Disconnecting the WLAN Device 104
Configuring the Wireless LAN 104
Configuring the WLAN Using Windows 104
Connection to the network 104
Troubleshooting the WLAN 105
Using the Bluetooth Device 107
Image Backup and Recovery Procedures 108
Creating a Backup of Bootable Disk and Recovery Image 108
RECOVER YOUR SYSTEM WHEN THE HARD DRIVE IS STILL ACCESSIBLE 109
Using the Recovery and Utility Tools 109
Restore the Recovery Image from Hidden Partition 111
RECOVER YOUR SYSTEM WHEN THE HARD DRIVE IS NOT BOOTABLE 112
Restore the Recovery Image for Full Hard Drive 112
Recovering Your Recovery Image Using Recovery and Utility (for new hard drive or non-bootable hard drive) 113
Installing the Software after the Recovery Image is Restored 114

Index 117

Fujitsu Contact Information

Service and Support

You can contact Fujitsu Service and Support in the following ways:

- Toll free phone: 1-800-Fujitsu (1-800-838-5487)
- Website: "http://solutions.us.fujitsu.com/www/content/support/contact/index.php"

Before you place the call, have the following information ready so that the customer support representative can provide you with the fastest possible solution:

- Product name
- Product configuration number
- Product serial number
- Purchase date
- Conditions under which the problem occurred
- Any error messages that have occurred
- Type of device connected, if any

Fujitsu Shopping Online

Please go to "http://www.shopfujitsu.com/store/ ".

Maintaining Latest Configuration

To ensure that you always have the most current driver updates related to your system, occasionally access the Fujitsu Software Download Manager (FSDM) utility. The FSDM utility is available from the Fujitsu Support site. FSDM will allow you to view a list of the most current drivers, utilities, and applications to determine whether you have the latest versions. If you have a Windows 7 or Windows 8/8.1 operating system, you will need to go to the Support Site to download the FSDM Utility: "http://support.fujitsupc.com/CS/Portal/support.do?srch=DOWNLOADS".

Limited Warranty

Your LIFEBOOK notebook is backed by a Fujitsu International Limited Warranty. Check the service kit that came with your notebook for the Limited Warranty period and terms and conditions.

Notational conventions

⚠	Pay particular attention to text marked with this symbol. Failure to observe these warnings could pose a risk to health, damage the device or lead to loss of data. The warranty will be invalidated if the device becomes defective through failure to observe these warnings.
i	Indicates important information for the proper use of the device.
▶	Indicates an activity that must be performed.
↳	Indicates a result.
`This font`	Indicates data entered using the keyboard in a program dialog or at the command line, e.g. your password (**`Name123`**) or a command used to start a program (**`start.exe`**)
`This font`	Indicates information that is displayed on the screen by a program, e.g.: `Installation is complete.`
This font	Indicates • terms and texts used in a software interface, e.g.: Click on *Save* • names of programs or files, e.g. *Windows* or *setup.exe*.
"This font"	Indicates • cross-references to another section, e.g. "Safety information" • cross-references to an external source, e.g. a web address: For more information, go to "http://solutions.us.fujitsu.com/" • names of CDs, DVDs and titles or designations for other materials, e.g.: "CD/DVD Drivers & Utilities" or "Safety/Regulations" manual
Key	Indicates a key on the keyboard, e.g: F10.
This font	Indicates terms and texts that are emphasized or highlighted, e.g.: **Do not switch off the device**.

Ports and controls

This chapter presents the individual hardware components of your device. It gives an overview of the indicators and connections of the device. Please familiarize yourself with these items before you start to work with the device.

Notebook open

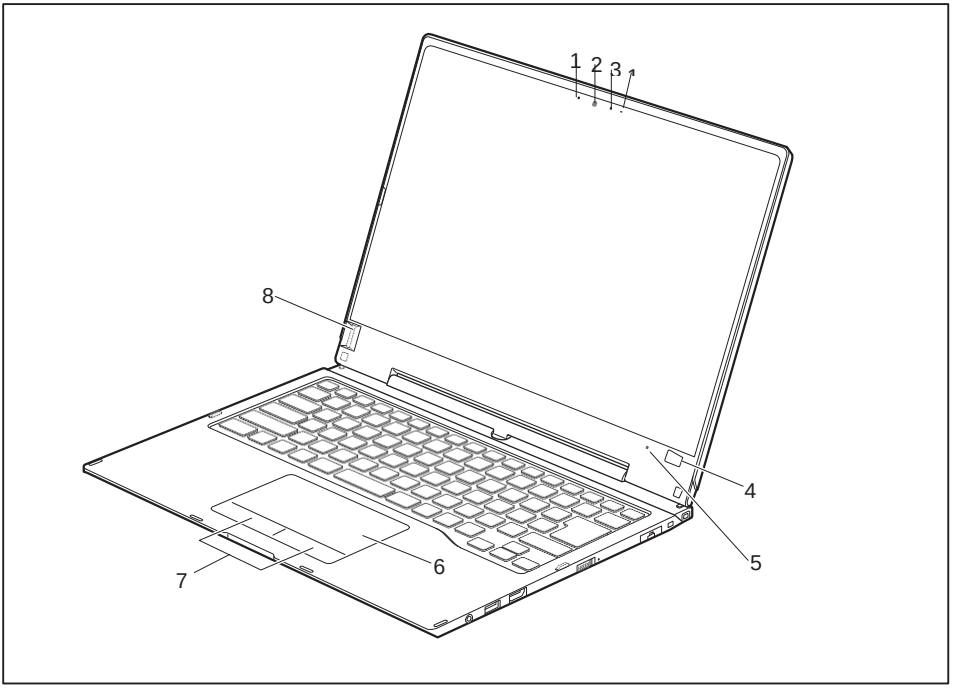

1 = Microphone
2 = Webcam
3 = Webcam LED
4 = Windows button
5 = Ambient light sensor
6 = Clickpad
7 = Clickpad buttons
8 = Fingerprint sensor

Left-hand side

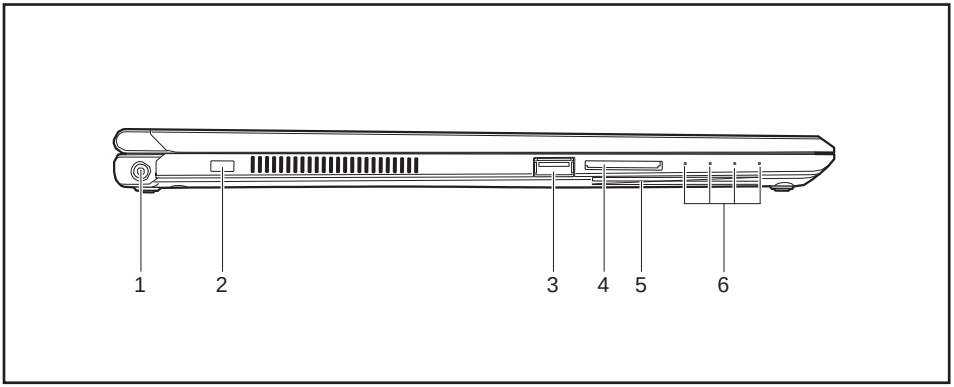

1 = DC jack (DC IN)
2 = Security Lock device
3 = USB port with charging function (Anytime USB charge, USB 3.0)
4 = Memory card slot
5 = SmartCard reader
6 = Status indicators

Right-hand side

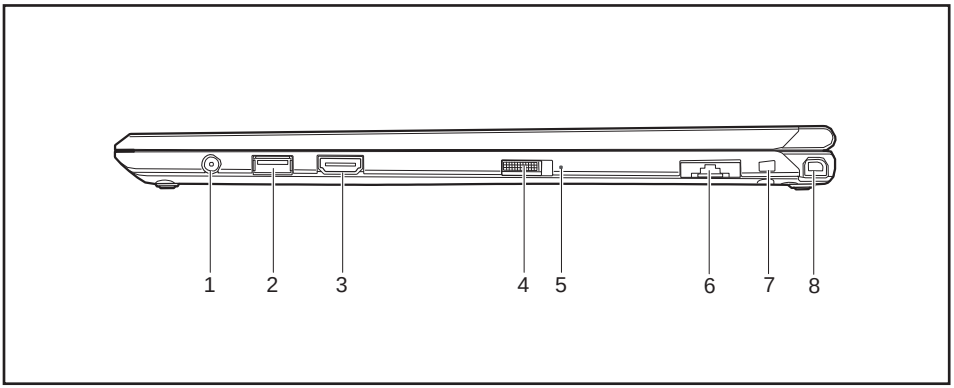

1 = Headphones port
2 = USB port 3.0
3 = HDMI port
4 = ON/OFF button
5 = Power-on indicator
6 = LAN connector (removable)
7 = Attachment eye for the stylus tether
8 = Stylus slot

Bottom

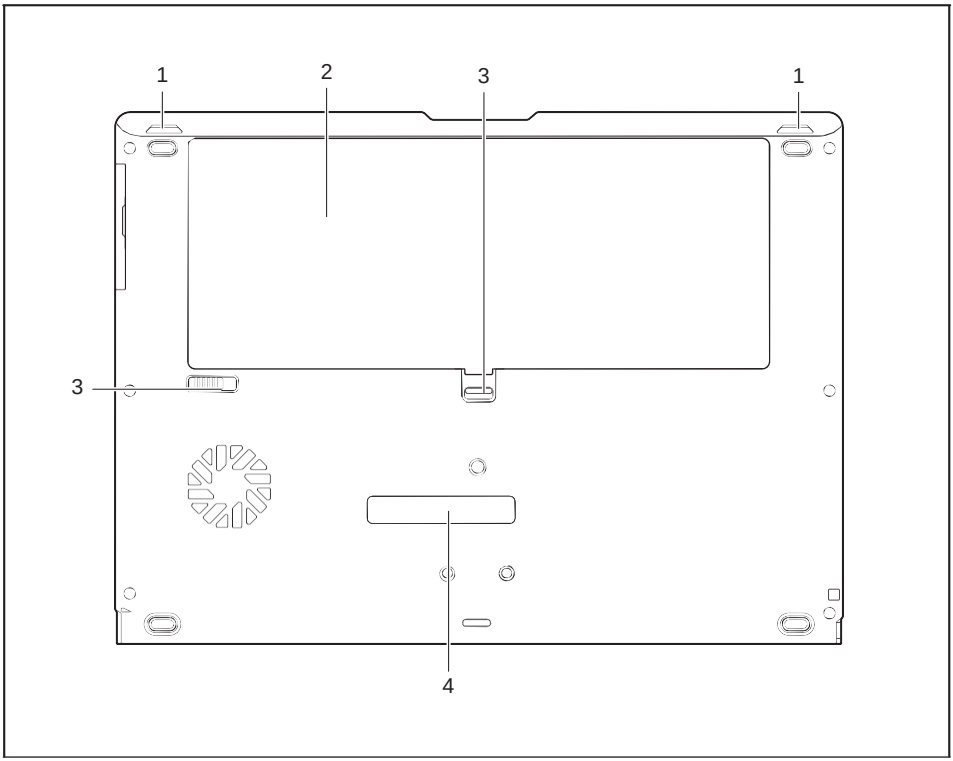

1 = Speakers

2 = Battery compartment with SIM card slot under the battery

3 = Battery Lock slider switch

4 = Port for port replicator

Important notes

This chapter contains essential safety information which must be followed when working with your notebook. Other notes also provide useful information which will help you with your notebook.

Safety instructions

Please observe the following safety information.

Please pay special attention to the sections in the manual marked with the symbol on the left.

When connecting and disconnecting cables, observe the relevant notes in this operating manual.

Read the information on the ambient conditions in the "Technical data", Page 90 chapter and the "First-time setup of your device", Page 17 chapter before preparing your notebook for use and switching it on for the first time.

When cleaning the device, please observe the relevant notes in the section .

Pay attention to the additional safety notes for devices with radio components provided in the "Safety/Regulations" manual.

Please refer to the notes in the chapter "Removing and installing components during servicing", Page 78.

When handling this device, you will come into contact with lead, a chemical which in California is held to be a possible cause of birth defects and other damage to fertility.

Wash your hands after using the device.

This notebook complies with the relevant safety regulations for data processing equipment. If you have any questions about setting up your notebook in the intended environment, please contact your sales outlet or our Hotline/Service Desk.

Additional safety notes for devices with radio components

If a radio component (Wireless LAN, Bluetooth, 4G) is incorporated in your notebook, you must be sure to observe the following safety notes when using your notebook:

- Switch off the radio components when you are in an aircraft or driving in a car.
- Switch off the radio components when you are in a hospital, an operating room or near a medical electronics system. The transmitted radio waves can impair the operation of medical devices.
- Switch off the radio components, when you let the device get near flammable gases or into hazardous environments (e.g. gas station, paintshops), as the transmitted radio waves can cause an explosion or a fire.

i

For further information on how to switch the radio components on and off, refer to chapter "Switching the wireless components on and off", Page 55.

Energy saving

Switch the notebook off when it is not in use. Switch off any connected external devices when they are not in use. If you use the energy saving functions, the notebook uses less power. You will then be able to work for longer before having to recharge the battery.

i

The energy efficiency is increased and environmental pollution is reduced. You save money and help protect the environment.

Energy saving under Windows

► Make use of the available energy saving functions as described in chapter "Using the energy saving functions", Page 52.

Traveling with your notebook

Please observe the points listed below when traveling with your notebook.

Before you travel

- ► Back up important data stored on your hard disk.
- ► Switch off the radio component for data security reasons. With data traffic via a wireless connection, it is also possible for unauthorized third parties to receive data.

i

Information on activating data encryption is provided in the documentation for your radio component.

- ► If you wish to use your notebook during a flight, check with the flight attendants if its use is safe.

When traveling in other countries

- ► If you are traveling abroad, check that the AC adapter can be operated with the local AC voltage. If this is not the case, obtain the appropriate AC adapter for your notebook. Do not use any other converter!
- ► Check whether the local AC voltage and the AC cable are compatible. If this is not the case, buy an AC cable that suits the local conditions.
- ► Enquire with the corresponding government office of the country you will be traveling to, whether you may use your notebook with its integrated radio component there.
- ► Take the necessary travel adapters with you when traveling abroad. Check the following table to see which travel adapters you will need, or ask your travel organizer.

Power connection	Travel destination
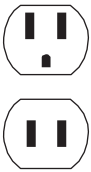	United States, Canada, Mexico, parts of Latin America, Japan, Korea, Philippines, Taiwan
	Russia and the Commonwealth of Independent States (CIS), much of Europe, parts of Latin America, the Middle East, parts of Africa, Hong Kong, India, much of south-east Asia
	United Kingdom, Ireland, Malaya, Singapore, parts of Africa
	China, Australia, New Zealand

Transporting the Tablet PC

Protect the Tablet PC from severe shocks and extreme temperatures (e.g. direct sunlight in a car).

- Do not transport your Tablet PC while it is turned on.
- Carry your Tablet PC with you while traveling, rather than checking it in as baggage.
- Never put your Tablet PC through a metal detector; have it hand-inspected by security personnel. You can however, put your Tablet PC through a properly tuned X-ray machine. To avoid problems, place it close to the entrance of the machine and remove it as soon as possible or have it hand-inspected by security personnel. Security officials may require you to turn your Tablet PC on, so make sure you have a charged battery on hand.

► Switch the Tablet PC off.

► Unplug the AC plug of the AC adapter and all external devices from the power outlets.

► Disconnect the AC adapter cable and the data cables for all external devices.

► To protect the Tablet PC against damaging jolts and bumps, use a suitable Tablet PC carrying case to transport your Tablet PC.

Storing your Tablet PC

- If storing your Tablet PC for a month or longer, turn it off, fully charge the battery, then remove and store all Lithium Polymer batteries.
- Store your Tablet PC in a cool, dry location. Temperatures should remain between 13ºF / -25ºC and 140ºF / 60ºC.
- Store your Tablet PC and batteries separately. If you store your Tablet PC with a battery installed, the battery will discharge, and battery life will be reduced. In addition, a faulty battery might damage your Tablet PC.

- Always power off the Tablet PC before transporting and/or packaging it. After shutting down the Tablet PC, wait until the status led panel indicates power off condition (i.e., no lights are illuminated).
- It is possible that the Tablet PC may not automatically go to power-off or hibernate mode when you close the lid. This situation may occur due to pre-operating system boot password security settings or some other application running on the Tablet PC.
- Attempting to transport the Tablet PC while power is on may damage the Tablet PC due to shock or overheating.

Cleaning the Tablet PC

- Use of incorrect cleaners can result in optical impairment of the LCD and / or damage to the computer. Always refer to the cleaner manufacturer's guidelines and material safety data sheets fo proper handling and use of the products.
- Never use ammonia, acidic, or alkaline cleaners or organic chemicals such as paint thinner, acetone or kerosene. It may damage surface finishes and the coating of the LCD screen.
- Never use compressed air for cleaning your computer.
- If your Tablet PC has a Smart Card slot, be very careful to avoid any liquid entering the slot as this can damage the unit.

Further information on cleaning the Tablet PC

The Tablet PC does not float.

If the Tablet PC is exposed to water or other liquids with its connections open, liquid can penetrate the Tablet PC and cause a malfunction. Do not continue to use the Tablet PC. Switch it off and contact our hotline / our service desk (see enclosed list of service desks or visit our website at: "http://www.fujitsu.com/us/support/").

First-time setup of your device

Please read the chapter "Important notes", Page 12.

If your device is equipped with a Windows operating system, the necessary hardware drivers and supplied software are already pre-installed.

Before switching it on for the first time, connect the device to the AC voltage using the AC adapter, see "Connecting the AC adapter", Page 18. The AC adapter must remain connected during the whole of the installation process.

A system test is performed when your device is first switched on. Various messages can appear. The display may remain dark for a short time or may flicker.

Please follow the instructions on the screen.

NEVER switch off your device during the first-time setup process.

On delivery, the battery can be found in the battery compartment or in the accessories kit. The battery must be charged if you want to operate your device using the battery.

When used on the move, the built-in battery provides the device with the necessary power. You can increase the operating time by using the available energy saving functions.

For instructions on how to connect external devices (e.g. mouse, printer) to your device, please refer to the operating manual for your device.

Unpacking and checking the device

If you find that damage has occurred during transport, please notify your local sales outlet immediately!

- ► Unpack all the individual parts.
- ► Check your device for any visible damage which may have occurred during transportation.

You may need to reuse the packaging in future, for example if you need to transport your device.

Choose a location

Choose a suitable location for the device before setting it up. In doing so, please follow these instructions:

- Never place the device or the AC adapter on a heat-sensitive surface. The surface could be damaged as a result.
- Never place the device on a soft surface (e.g. carpeting, upholstered furniture, bed). This can block the air vents and cause overheating and damage.
- The underside of the device heats up during normal operation. Prolonged contact with the skin can become unpleasant or even result in burns.
- Place the device on a stable, flat, non-slippery surface. Please note that the rubber feet of the device may mark certain types of delicate surfaces.
- Keep other objects at least 100 mm / 3.97 inches away from the device and its AC adapter to ensure adequate ventilation.
- Never cover the ventilation openings of the device.
- Do not expose the device to extreme environmental conditions. Protect the device against dust, humidity and heat.

Connecting the AC adapter

Observe the safety notes in the enclosed "Safety/Regulations" manual.

The supplied AC cable conforms to the requirements of the country in which you purchased your device. Make sure that the AC cable is approved for use in the country in which you intend to use it.

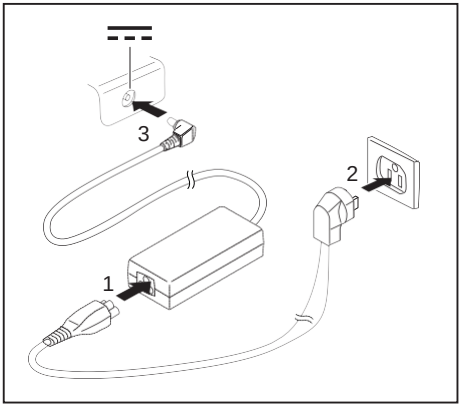

► Connect the AC cable (1) to the AC adapter.

► Plug the AC cable (2) into a power outlet.

► Connect the AC adapter cable (3) to the DC jack (DC IN) of the device.

Switching on the device for the first time

To make it easier to use your device for the first time, the operating system is pre-installed on the hard disk.

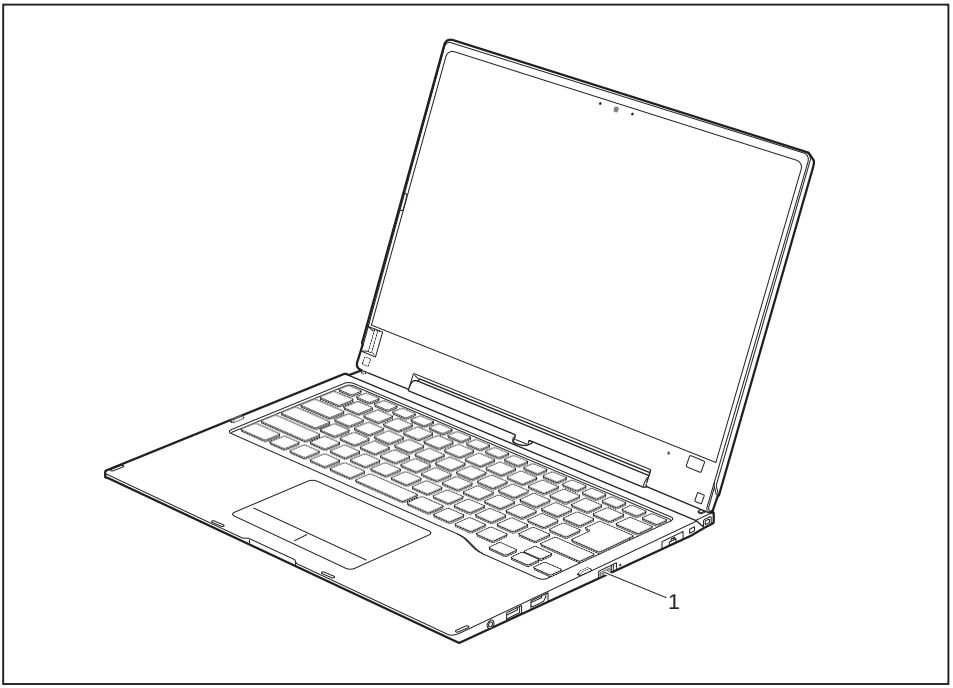

► Slide the ON/OFF button (1) to the right to switch on the notebook.

↳ The ON/OFF button returns automatically to its original position.

► During the installation process, follow the on-screen instructions.

i

You can find information and help on the Windows operating system functions on the Internet at "http://windows.microsoft.com".

Installing Bonus Apps

After you have started your system the first time, you will see a Bonus Apps icon on your desktop.

► Click on the icon to see which additional applications are available for you to install.

↳ Applications that are already installed appear in grey, those that are available for installation appear in blue.

► Select the applications you wish to install by selecting the checkbox adjacent to your selection.

or

► Click *Select All* if you would like to install all available applications

► To confirm your selection click *Install*.

i

Note that in some cases (depending upon which application was selected for installation) after installation completes, the system will prompt you to reboot.

There are also cases in which if multiple applications are selected to install but one of them needs a reboot, the system will reboot and continue installing the rest of the selected applications.

Working with the notebook

This chapter describes the basics for operating your notebook. Please refer to "Connecting external devices", Page 72 for instructions on how to connect external devices such as a mouse and a printer to the notebook.

Please refer to the notes in the chapter "Important notes", Page 12.

Status indicators

The status indicators provide information about the status of the power supply, the drives and the keyboard functions, etc.

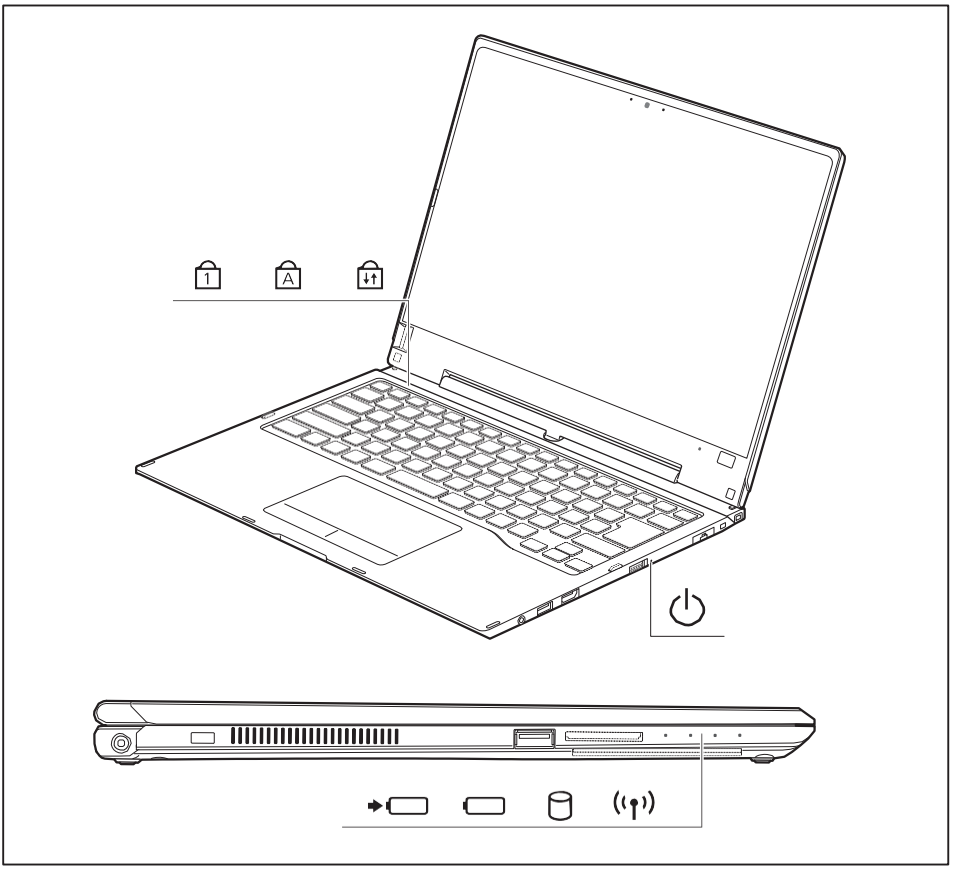

Status indicator	Description
	Num Lock indicator The indicator is illuminated: The Num key has been pressed. The virtual number keys have been activated. You can output the characters indicated on the upper right of the keys.
	Caps Lock indicator The indicator is illuminated: The Caps Lock key has been pressed. All characters are displayed in upper case. In the case of overlay keys, the character printed on the upper left of the key will appear when that key is pressed.
	Scroll Lock indicator The indicator is illuminated: The key combination FN + Rol has been pressed. The effect that this key has varies between applications.
	Power-on indicator • The indicator is illuminated: The notebook is switched on. • The indicator flashes: The notebook is in sleep mode (Save-to-RAM). • The indicator is not lit up: The notebook is switched off or the notebook is in Save-to-Disk mode.
	Battery charging indicator/AC connection The charging state of the battery is shown by the rechargeable battery indicator. With AC adapter connected: • The indicator lights up white: The battery is fully charged. • The indicator light is orange: The battery is being charged. • The indicator is flashing orange: The AC adapter is connected but the battery cannot be charged as the battery is too hot or too cold for charging. The charging process is continued as soon as the battery has reached a permissible temperature again. • Indicator is off: The system is operating under battery power and the AC adapter is not connected.
	Battery indicator The battery indicator shows the battery charge of the two installed batteries. • The indicator lights up white: The battery is between 51% and 100% charged. • The indicator light is orange: The battery is between 13% and 50% charged. • The indicator lights up red: The battery is between 0% and 12% charged. • The indicator is flashing orange: The battery state of charge is being checked (for four seconds after battery installation). • The indicator is flashing red: The battery is faulty. • The indicator is not lit up: There is no battery installed.
	Drive indicator The indicator is illuminated: The hard disk drive is being accessed.
	Radio components indicator • The indicator is illuminated: The radio components are switched on. • Indicator is off: The radio components are switched off.

Opening the notebook

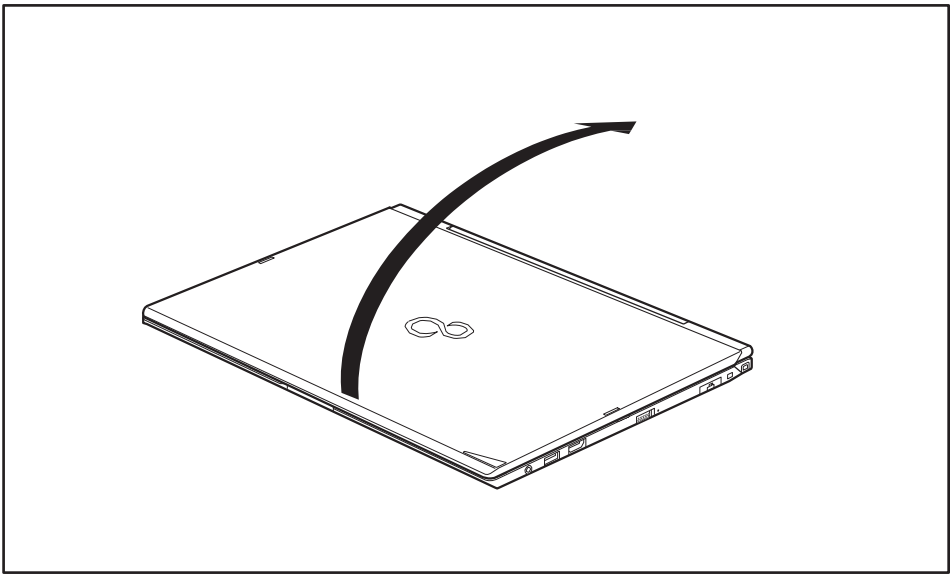

► Fold the LCD screen upwards.

Switching the notebook on

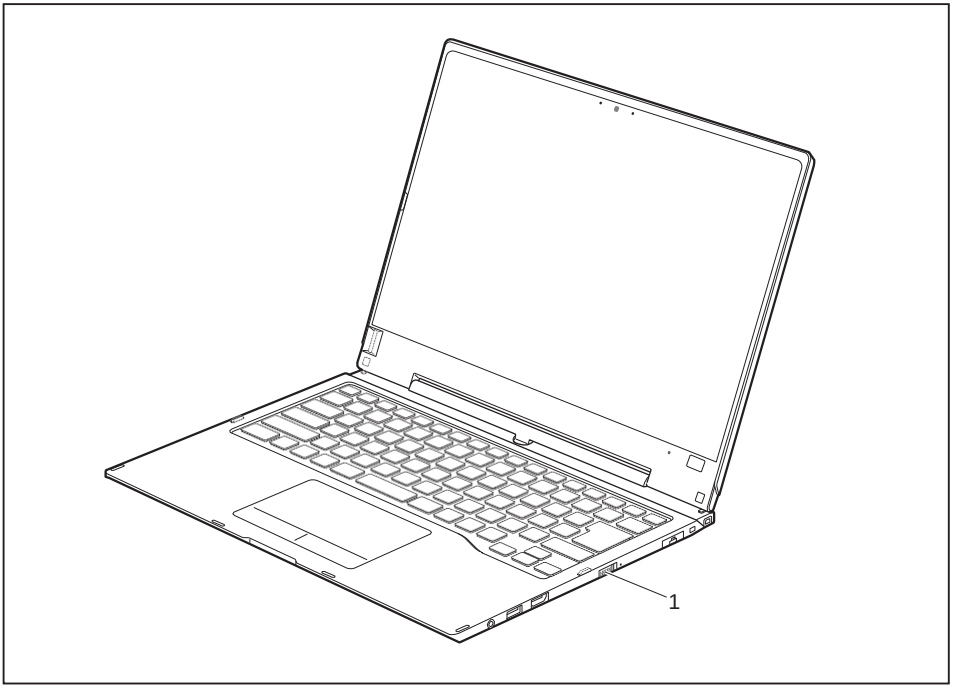

► Slide the ON/OFF button (1) to the right to switch on the notebook.

↳ The ON/OFF button returns automatically to its original position.
The ON/OFF button (1) lights up whenever the system is switched on.

Programing the ON/OFF button

You can program the ON/OFF button:

Operating system	Menu
Windows 7	*Start - (Settings) - Control Panel - System and Security - Power Options*
Windows 8.1	*Windows 8.1 Desktop - Control Panel - Hardware and Sound - Power Options*

i

If you have assigned a password, you must enter this when requested to do so in order to start the operating system. Detailed information can be found in the chapter "Security functions", Page 63.

Different ways to use your notebook

During your daily work, you can use your notebook as a tablet PC or as a notebook, just as you wish.

You must note that the screen cannot be turned completely on its own axis! Stop turning the screen when you feel resistance. No guarantee claims can be met for damage caused by wrong turning.

From notebook to Tablet PC

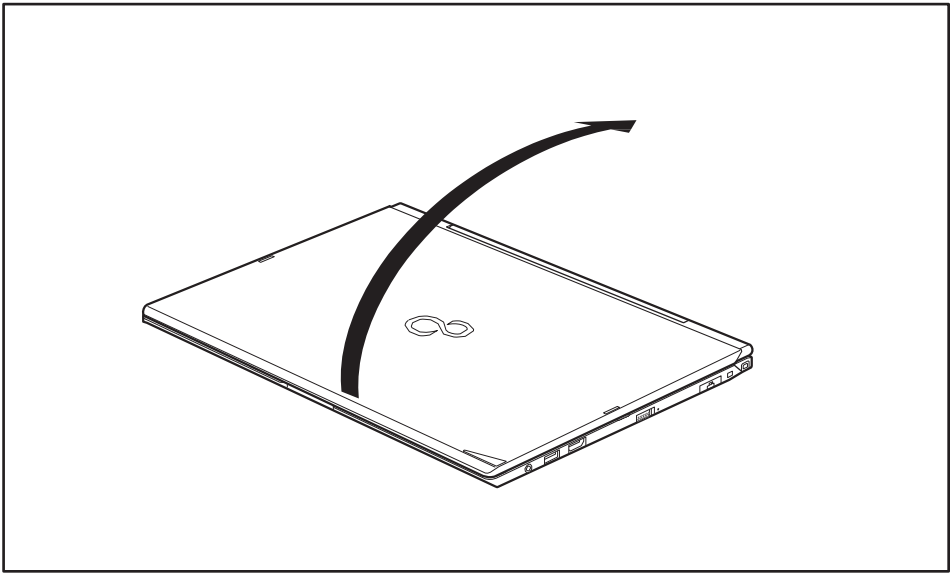

► Raise the LCD screen into a vertical position.

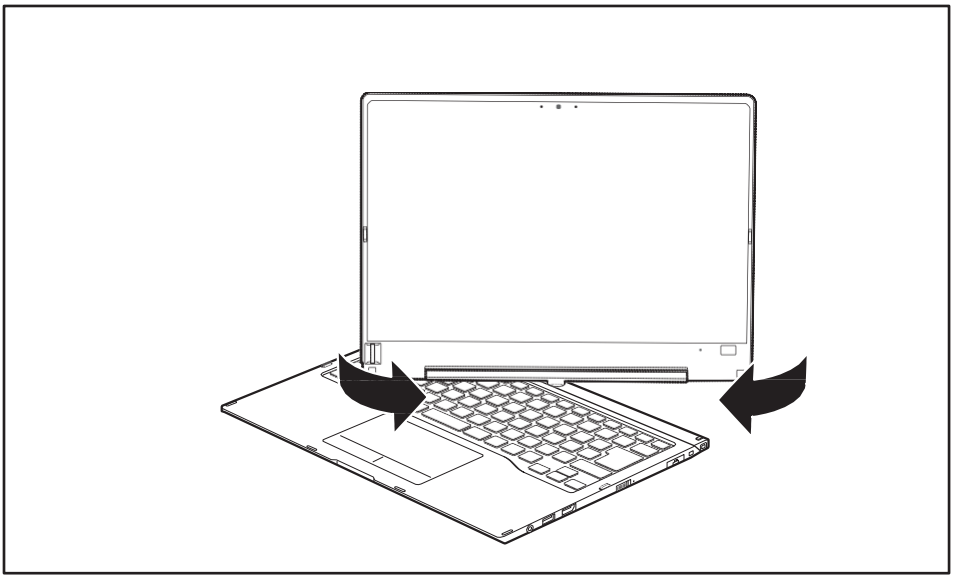

- ► Hold the screen as low as possible on both sides. Turn the screen to the left or right in the direction of the arrow. At first you will feel some slight resistance, then the screen will turn easily and without friction.
- ► Turn the screen further until it has turned 180° and the hinge latches in.

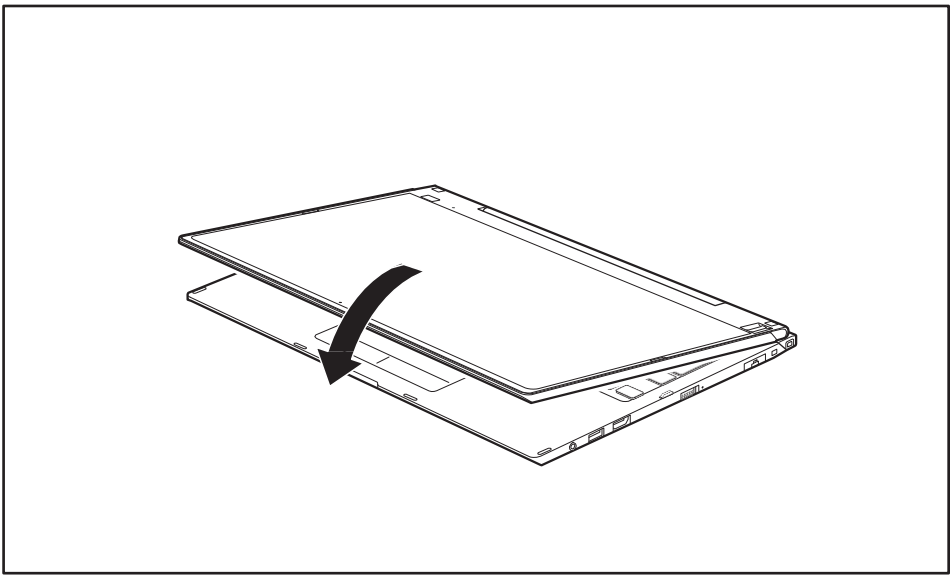

► Now fold the screen down until the back of the screen is almost flat on top of the keyboard.
↳ The screen is now secured in the tablet position.

Select display orientation (portrait or landscape format)

You can choose to use either portrait or landscape format for the display.

Windows 7

You can change these settings in the Fujitsu menu or under *Start* - (*Settings* -) *Control Panel* - *Hardware and Sound* - *Display* - *Settings*.

Windows 8.1

You can change these settings under *Windows 8.1 Desktop* - *Control Panel* - *Hardware and Sound* - *Windows Mobility Center / Rotate screen*.

WARNING: If you have a system with a wireless WAN module installed, please note the following – while holding the system horizontally with the Web camera at the bottom, WWAN must not be operated with the antenna open. Operating in this position could result in damage to the WWAN antenna.

In the *Fujitsu Tablet Controls* settings, profiles are saved for operation with different screen orientations. These profiles have preset standard configurations that can be modified as desired.

These settings do not just affect the screen settings on the Tablet PC, but also on external monitors that are connected.

From Tablet PC to notebook

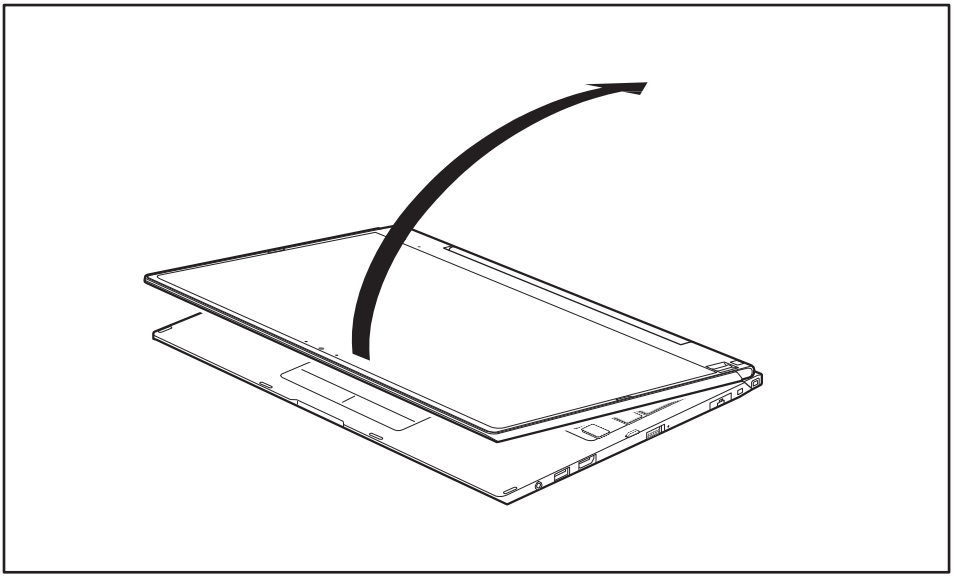

► Raise the LCD screen into a vertical position.

i

You must note that the screen cannot be turned completely on its own axis! Stop turning the screen when you feel resistance. No guarantee claims can be met for damage caused by wrong turning.

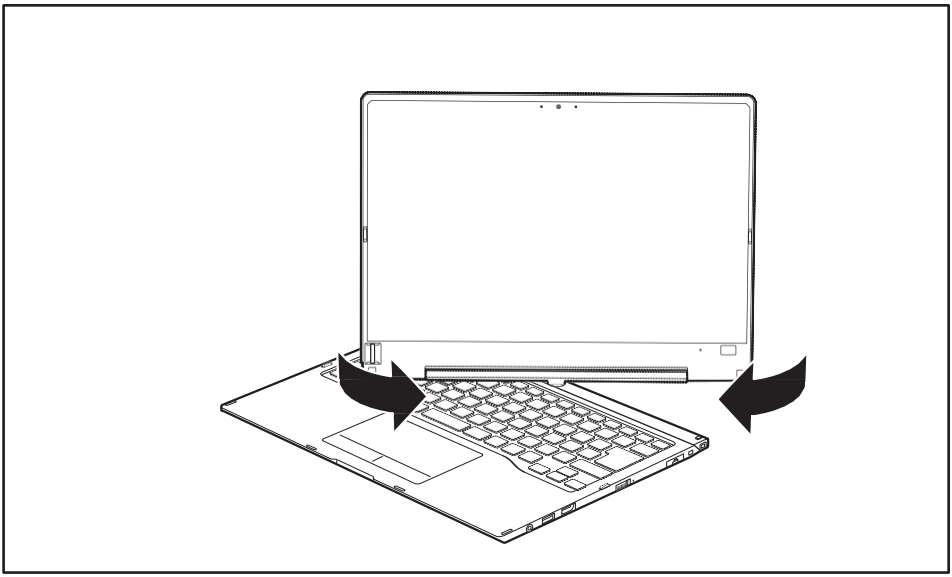

- ► Hold the screen on both sides as far down as possible and then turn the screen. It will turn easily and without resistance.
- ► Turn or move the screen further until it has turned 180° and the hinge latches in.

Switching off the notebook

- ► Close all applications and then shut down your operating system (please refer to the "Operating system manual").
- ► Slide the ON/OFF button towards the right.
- ↳ The ON/OFF button returns automatically to its original position.

Closing the notebook

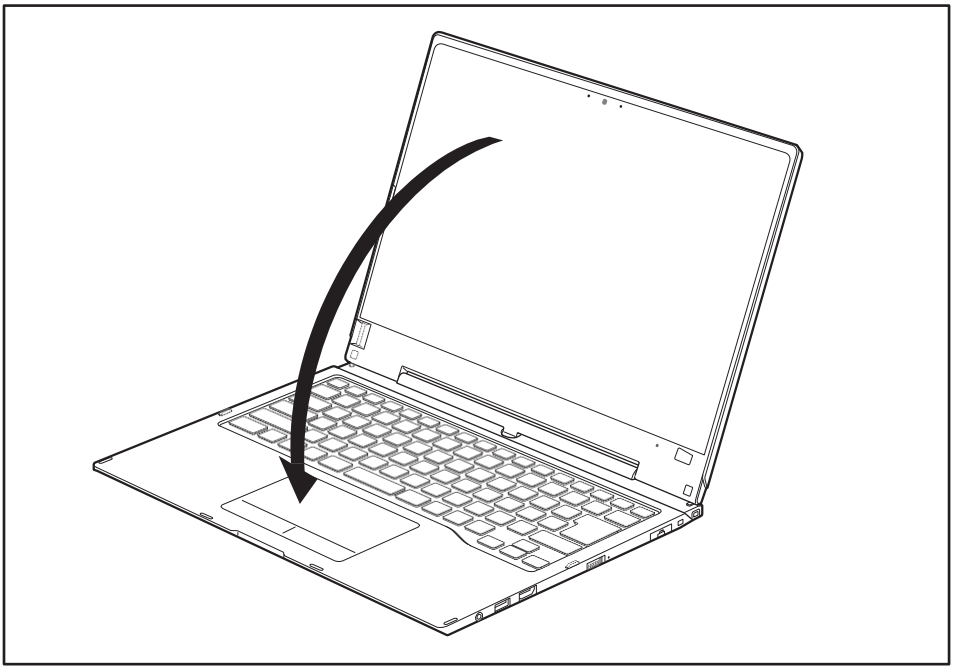

► Fold the LCD screen onto the bottom part of the notebook so that it locks into place.

Handwriting recognition

For detailed information on handwriting recognition, see the documentation for your operating system.

At present, handwriting recognition under Windows 7 or Window 8.1 supports the following languages:

English, German, French, Italian, Japanese, Korean, Chinese (traditional and simplified), Dutch, Portuguese, Spanish, Brazilian, Norwegian (Bokmål and Nynorsk), Swedish, Finnish, Danish, Polish, Rumanian, Serbian (Cyrillic and Latin script), Catalan, Russian, Czech and Croatian.

Under Windows 8.1 you can set the required language under *Control Panel – Time, Language and Region – Language*.

LCD screen

High-quality LCD screens (TFT) are installed in Fujitsu notebooks. For technical reasons, these screens are manufactured for a specific resolution. An optimal, clear picture can only be ensured in the resolution intended for the particular screen. A screen resolution which differs from the specification can result in an unclear picture.

The resolution of the screen of your notebook is optimally set at the factory.

Current production technology cannot guarantee an absolutely fault-free screen display. A few isolated constantly lit or unlit pixels (picture elements) may be present. The maximum permitted number of such faulty pixels is specified in the international standard ISO 9241-307 (Class II).

Example:

A screen with a resolution of 1280 x 800 has 1280 x 800 = 1024000 pixels. Each pixel consists of three subpixels (red, green and blue), so there are almost 3 million subpixels in total. According to ISO 9241-307 (class II), a maximum of 2 light and 2 dark pixels and in addition 5 light or 10 dark subpixels or an equivalent mix (1 light subpixel counts as 2 dark subpixels) are allowed to be defective.

At a resolution of 1600 x 900 = 1440000 pixels, a maximum of 3 light and 3 dark pixels and in addition 7 light or 14 dark subpixels are allowed to be defective.

Pixel	A pixel consists of 3 subpixels, normally red, green and blue. A pixel is the smallest element that can be generated by complete functionality of the display.
Subpixel	A subpixel is a separately addressable internal structure within a pixel that enhances the pixel function.
Cluster	A cluster contains two or more defective pixels or subpixels in a 5 x 5 pixel block.

Background lighting

LCD screens are operated with background lighting. The luminosity of the background lighting can decrease during the period of use of the notebook. However, you can set the brightness of your monitor individually.

Synchronizing the display on the LCD screen and an external monitor

For more information, please refer to Chapter "Key combinations", Page 44 under "Switching between screen output".

Ambient light sensor

If your notebook was shipped with a *Windows* operating system, the screen brightness is regulated by the ambient light sensor and is dependent on the particular light conditions. This results in optimum readability and longer battery life at the same time.

Using a device as a tablet PC

You can execute commands as follows:

- using the stylus (supplied with your device).
- using your finger

Using your fingers

You can execute certain commands by using your finger tip on the touchscreen of your device.

i

Alternatively, everything which you can select or activate using your finger tip can also be selected or activated using the stylus.

Calibrating the Dual Digitizer for finger-based operation of the device

i

Please see the appropriate supplementary sheet for instructions on how to calibrate your device to use Dual Digitizer Technology.

Please note: There are separate calibration programs available for calibrating the stylus and for calibrating finger-based operation. In each case, use the calibration tool described in the supplementary sheet. Do not use the calibration tool for the stylus to calibrate finger-based operation.

Actions with one finger

Action	Description
Selecting objects (click with the left mouse button)	► Tap once briefly on the object with your finger.
Starting programs (double-click with the left mouse button)	► Use one finger to tap twice in quick succession on the program symbol.
Moving objects/windows (while holding the left mouse button pressed, drag & drop)	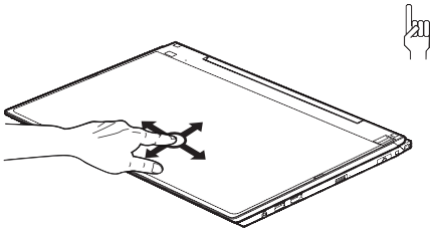 ► Place a finger on the object/window, keep your fingertip pressed against the touchscreen and move the desired object/window.
Opening a context menu (click with the right mouse button)	► Tap on the desired item with your finger. Keep your fingertip pressed against the touchscreen. The context menu appears.
Moving the cursor	► Position one finger on the touchscreen and move the finger in the desired direction.

Actions using two fingers

Action	Description
Scrolling	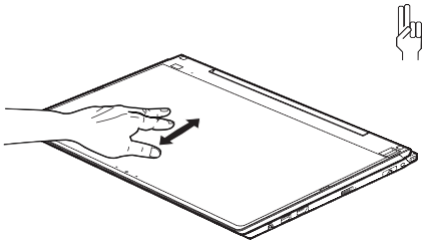 ► Place two fingers on the touchscreen. ► Move the fingers up to scroll up. or ► Move the fingers down to scroll down.
Rotating	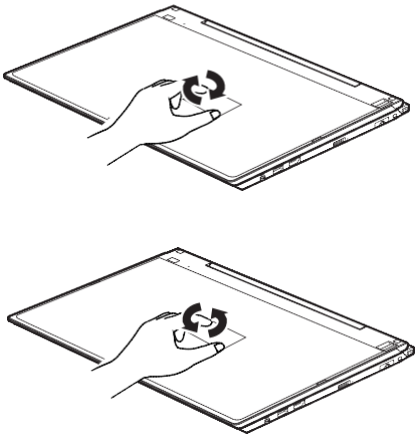 ► Position your thumb on the touchscreen and rotate the image clockwise or anticlockwise using your index finger.

Action	Description
Increasing or decreasing view	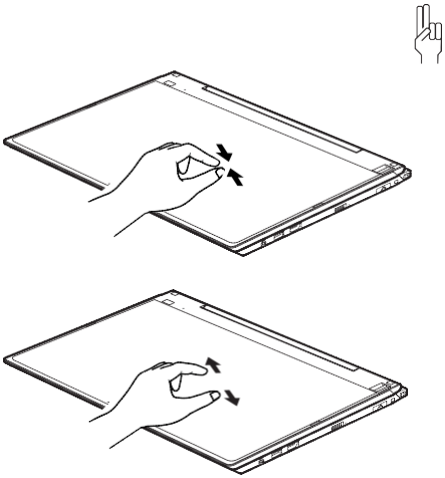 ► Place two fingers on the touchscreen and move them apart to increase the size of the view. or ► Place two fingers on the touchscreen and move them together to decrease the size of the view.
Locking context-sensitive menus	► Use two fingers to tap twice in quick succession on the touch screen.

Using the stylus

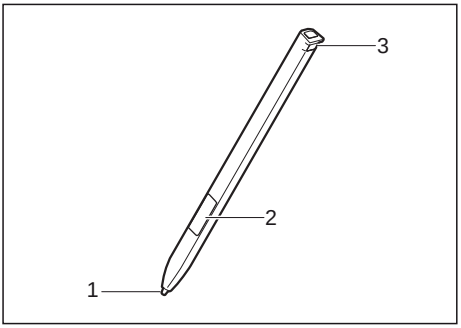

1 = stylus tip

2 = stylus button (right mouse button)

3 = eyelet for stylus tether

You can use the stylus on your Tablet PC as an electronic writing tool, to select menu items and to navigate through the programs. Programs that support handwriting recognition also allow you to write directly on the screen with the stylus. You can also use the stylus as a drawing tool.

The Tablet PC is supplied with a stylus tether which you can attach to the eyelets on the stylus and on the Tablet PC.

Use only the stylus that was provided with your Tablet PC. Do not use any other pointed object as a substitute, that was not specially designed for your Tablet PC. Replace the stylus tip if it is worn. The warranty does not cover a scratched screen.

While writing, take care that you do not scratch the surface of the display (e.g. with a wristwatch or bracelet).

The stylus of the Tablet PC is an electronic instrument that can be damaged if used improperly. Handle the stylus with care.

Our recommendations for proper handling of the stylus are as follows:

- Do not gesture with the stylus.
- Do not use the stylus as a pointer.
- Do not use the stylus on surfaces other than the screen of the Tablet PC.
- Do not try to turn the grip of the stylus. The grip is used to put the stylus into its slot and to take it out of its slot.
- Never store the stylus with its weight on the tip (e.g. with the tip down in a pen container). If the stylus is stored with the tip pointing down, this may have an adverse effect on the stylus mechanism (particularly under high temperatures). In this case the stylus tip may react as though it is constantly being pressed down. To avoid damage, the stylus should be stored in the stylus slot when not in use.

The stylus can be influenced by electromagnetic fields (cursor quivers or jumps). There may be a few areas on the screen where the cursor quivers slightly in spite of pressing the stylus down firmly.

The screen responds to entries made with the tip of the finger or the stylus when the tip of the finger or the stylus directly touches the screen.

You can use the stylus to perform almost all functions for which you would otherwise use a mouse.

Delete functions are not supported by the stylus.

Action	Mouse	Stylus
Selecting menu items	Click with the left mouse button.	Tap on the menu entry with the tip of the stylus.
Starting programs	Double-click with the left mouse button.	Tap on the program symbol twice in rapid succession using the stylus tip.
Moving an object or window	Drag with the left mouse button pressed.	Place the stylus tip directly on the object or window. Keep the stylus tip held against the screen. Drag the desired object or window.

Opening a context menu	Click with the right mouse button.	Tap on the desired element with the stylus and keep the stylus pressed against the screen.
Moving the cursor	Move the mouse	Place the tip of the stylus directly on the screen.

Adjusting the stylus

Operating system	Menu
Windows 7	Under *Hardware and Sound - Pen and Input Devices*, you can make various settings for the stylus in the control panel (assignment and function of the stylus button).
Windows 8.1	Under *Windows 8.1 Desktop - Control Panel - Hardware and Sound - Pen and Input Devices* you can make various settings for the stylus (assignment and function of the stylus button).

Calibrating the stylus

If Windows 8.1 is installed on your Tablet PC, your Tablet PC is already calibrated at initial setup.

If a different operating system is installed on your Tablet PC, you must calibrate it with the stylus before first use, so that it recognizes the stylus as accurately as possible.

You should also always repeat the calibration if the coordination between the stylus and the cursor movement deteriorates.

Operating system	Menu
Windows 7 / Windows 8.1 Desktop	To calibrate, run the *Hardware and Sound / Tablet PC Settings* function in the Control Panel. You need to calibrate both portrait and landscape formats.

Securing a stylus tether

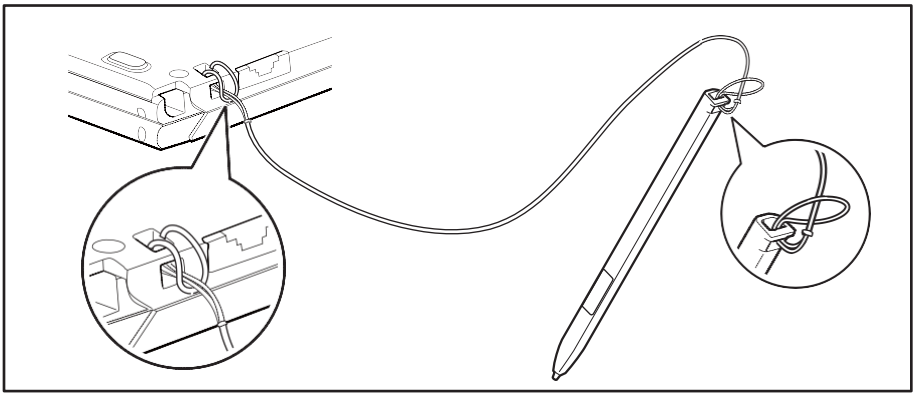

You can secure the stylus with a stylus tether to prevent accidentally dropping it or losing it.

► Secure the end of the stylus tether with the smaller loop to your stylus.

► Secure the end of the stylus tether with the larger loop to your notebook.

Using the device as a notebook

Clickpad and Clickpad buttons

Keep the Clickpad clean. Protect it from dirt, liquids, and grease.

Do not use the Clickpad if your fingers are dirty.

Do not rest heavy objects (e.g. books) on the Clickpad or the Clickpad buttons.

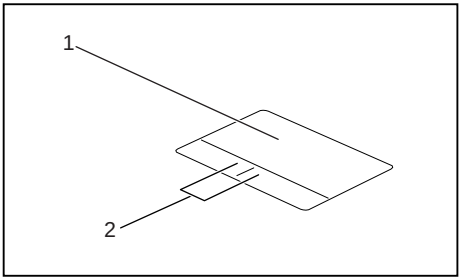

1 = Clickpad

2 = Clickpad buttons

The Clickpad enables you to move the mouse pointer on the screen.

The Clickpad buttons allow the selection and execution of commands. They correspond to the buttons on a conventional mouse.

You can also deactivate the Clickpad via a keyboard shortcut, so that you cannot move the pointer on the screen unintentionally (see chapter "Key combinations", Page 44).

Moving the pointer

► Move your finger on the Clickpad.

↳ The pointer will move.

Selecting an item

► Move the pointer to the item you wish to select.

► Tap the Clickpad once or press the left button once.

↳ The item is selected.

Executing commands

► Move the pointer to the field you wish to select.

► Tap the Clickpad twice or press the left button twice.

↳ The command is executed.

Dragging items

- ► Select the desired item.
- ► Press and hold the left button and drag the item to the desired position with the finger on the Clickpad.
- ↳ The item will be moved.

Switching the Clickpad on and off

i

You can switch the Clickpad on and off using a key combination, see "Key combinations", Page 44.

Keyboard

The keyboard of your notebook is subject to continuous wear through normal use. The key markings are especially prone to wear. The key markings are liable to wear away over the life of the notebook.

The keyboard has been designed to provide all the functions of an enhanced keyboard. Some enhanced keyboard functions are mapped with key combinations.

The following description of the keys applies to the Windows operating system. Additional functions supported by the keys are described in the relevant manuals supplied with your application programs.

The following illustration shows how to access the different characters on keys with overlaid functions. The example applies when the Caps Lock key has not been activated.

The illustration may differ from your device variant.

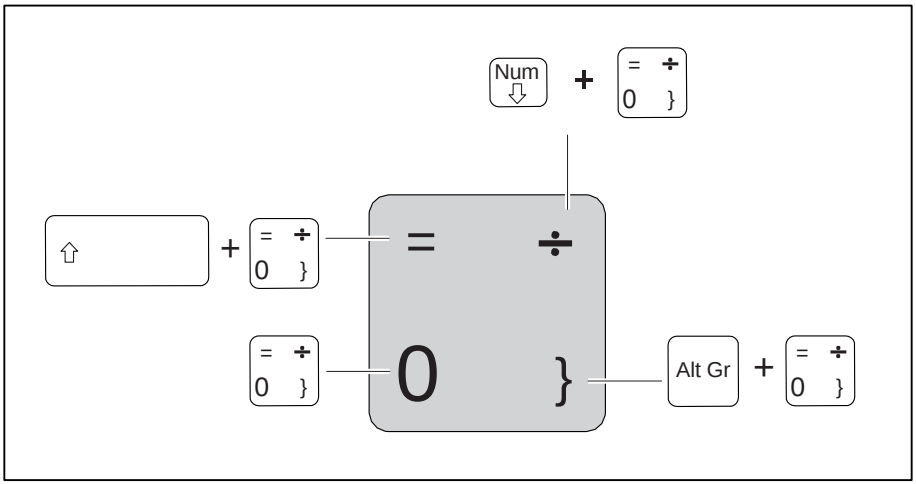

Key	Description
←	**Backspace key** The Backspace key deletes the character to the left of the cursor.
⇤ ⇥	**Tab key** The Tab key moves the cursor to the next tab stop.
↵	**Enter key (return)** The Enter key terminates a command line. The command you have entered is executed when you press this key.
Caps Lock	**Caps Lock key** The Caps Lock key activates uppercase mode. In Caps Lock mode, all of the characters you type appear in upper case. In the case of overlay keys, the character printed on the upper left of the key will appear when that key is pressed. To cancel the Caps Lock function, simply press the Caps Lock key again.
⇧	**Shift key** The Shift key causes uppercase characters to appear. In the case of overlay keys, the character printed on the upper left of the key will appear when that key is pressed.
Fn	**Fn key** The Fn key enables the special functions indicated on overlay keys (see "Key combinations", Page 44).
↑ ← ↓ →	**Cursor keys** The cursor keys move the cursor in the direction of the arrow, i.e. up, down, left, or right.
⊞	**Windows key** The Windows key switches between the start screen and the last used application.
☰	**Menu key** The Menu key opens the menu for the active application.

Virtual number keys

Virtual number keys are provided so that the keys of a number keypad can be used for certain applications. The virtual number keys are recognizable on the keyboard by the numbers and symbols printed in the upper right corner of each key. If you have switched on the virtual number keys, you can output the characters shown on the upper right of the keys.

i

The key assignment shown below may be different from the keyboard layout of your device variant.

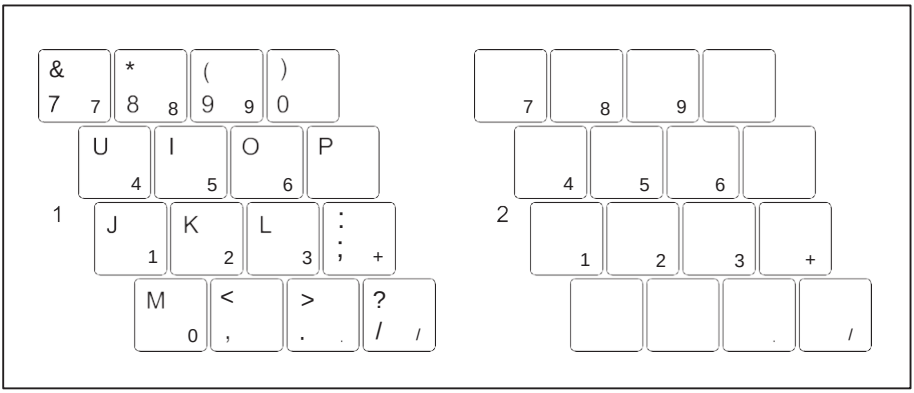

1 = Character valid when the Num key is not active

2 = Character valid when the Num key is active

Further information about the status indicators can be found in chapter "Status indicators", Page 21.

Country and keyboard settings

► Make the country and keyboard settings as described in the documentation for your operating system.

Key combinations

The following description of key combinations applies to Windows operating systems. Some of the following key combinations may not function in other operating systems or with certain device drivers.

Other key combinations are described in the relevant manuals supplied with your application programs.

Key combinations are entered as follows:

► Press the first key in the combination and keep it pressed.

► While holding the first key down, press the other key or keys in the combination.

Combination	Description
Fn + F2	**Activate/deactivate keyboard backlight** On backlit keyboards, this key combination activates or deactivates the backlight. Sequence: • Background lighting off • Low brightness • High brightness • Background lighting off
Fn + F3	**Switching the speakers on and off** This key combination switches your notebook's speakers off and on.
Fn + F4	**Activate/deactivate mouse and Clickpad buttons** This key combination switches the Clickpad and the Clickpad buttons on or off.
Fn + F5	**Wireless components** This key combination switches the wireless components off or on.
Fn + F6	**Decreasing the screen brightness** This key combination decreases the brightness of the screen.
Fn + F7	**Increasing the screen brightness** This key combination increases the brightness of the screen.
Fn + F8	**Decrease the volume** This key combination reduces the volume of the internal speakers.

Combination	Description
Fn + F9	**Increase volume** This key combination increases the volume of the internal speakers.
Fn + F10	**Switching between screen outputs** Use this key combination to select which screen(s) is/are used for display if an external monitor is connected. The screen output is possible in the following sequence: • only on the notebook's LCD screen • on the LCD screen of the notebook and the external monitor at the same time • only on the external monitor This setting is useful if you would like a high resolution and a high refresh rate on an external monitor.
Alt + ⇤ ⇥	**Switch between open applications** Use this key combination to switch between several open applications.
⊞ + D	**Switching over to Windows 8 Desktop (Windows 8 only)** With this key combination, you can switch from Windows 8 Modern to Windows 8 Desktop.
⊞ + M	**Switching over to Windows 8 Desktop and minimizing applications (Windows 8 only)** With this key combination, you can switch from Windows 8 Modern to Windows 8 Desktop and at the same time minimize the applications.
Ctrl + Alt + Del	**Windows security/Task-Manager** This key combination opens the Windows Security/Task Manager window.
⇧ + ⇤ ⇥	**Back tab** This key combination moves the cursor back to the previous tab stop.

i

Key combinations using the Windows keys are detailed in the manual for your operating system.

Tablet buttons

Your notebook is equipped with a Windows button and two volume buttons.

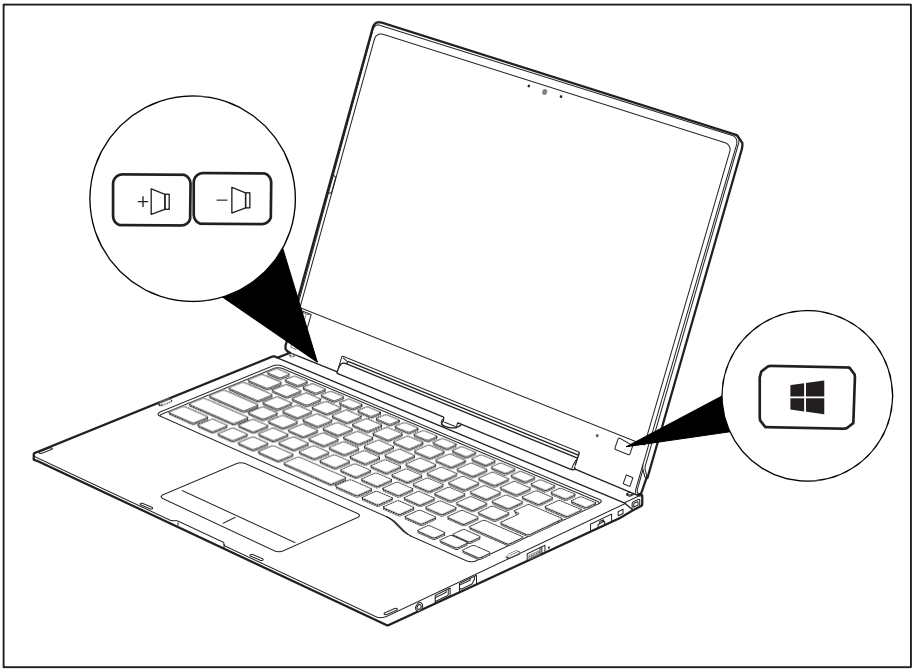

Button	Function
	Windows button This button has the same function as the Windows Start key on the keyboard. If the button is pressed in combination with the ON/OFF button, the function is the same as for the Ctrl + Alt + Del key combination.
	Increase volume This button increases the volume of the internal speakers.
	Decrease the volume This button decreases the volume of the internal speakers.

Webcam

Depending on the software used, you can use your webcam to take pictures, record video clips or take part in web chats.

The webcam has its own status indicator. The indicator lights up when the webcam is active.

- The picture quality depends on the lighting conditions and the software being used.
- You can only operate the webcam with a particular application (e.g. an Internet telephony program or a video conferencing program which supports a webcam).
- When using the webcam, the notebook base must not wobble.
- The webcam automatically adjusts itself to the current light level. For this reason the LCD display may flicker while the light level is adjusted.

i

Further information on use of the webcam and additional settings for your webcam can be found in the help function of the program using the webcam.

Rechargeable battery

During mobile use, the notebook runs on its built-in battery. You can increase the service life of the battery by caring for the battery properly. The average battery service life is around 800 charge/discharge cycles.

You can extend the battery service life by taking advantage of the available energy saving functions.

Charging, caring for and maintaining the battery

The notebook battery can only be charged if the ambient temperature is between 5°C / 41°F and a maximum of 35°C / 95°F.

You can charge the battery by connecting the notebook to the AC adapter (see "Connecting the AC adapter", Page 18).

If the battery is running low you will hear a warning alarm. If you do not connect the AC adapter within five minutes of the warning alarm described above, your notebook will automatically switch off.

Monitoring the battery state of charge

Windows also has a "Battery charge meter" in the taskbar for monitoring the battery capacity. When you place the mouse pointer on the battery symbol, the system displays the state of charge of the battery.

Battery storage

The battery should be stored in a dry environment at a temperature between 0°C / 32°F and 30°C / 86°F. The lower the storage temperature, the lower the rate of self-discharge.

If you will be storing batteries for a longer period (more than two months), the battery charge level should be approx. 30%. To prevent exhaustive discharge which would permanently damage the battery, check the level of charge of the battery at regular intervals.

To be able to make use of the optimum capacity of the battery, you should allow the battery to fully discharge and then recharge it.

If you will not use batteries for long periods, remove them from the notebook. Never store batteries in the device.

Removing and installing the battery

Only use batteries approved by Fujitsu for your notebook.

Never use force when fitting or removing a battery.

Make sure that no foreign bodies get into the battery connections.

Never store a battery for longer periods in the discharged state. This can make it impossible to recharge.

Removing a battery

Please observe the safety information in chapter "Important notes", Page 12.

Remove the power plug from the power outlet!

► Switch the device off.

The device must not be in energy saving mode.

► Close the LCD screen.
► Remove all the cables from the device.
► Turn the device over and place it on a stable, flat and clean surface. If necessary, lay an anti-slip cloth on this surface to prevent the device from being scratched.

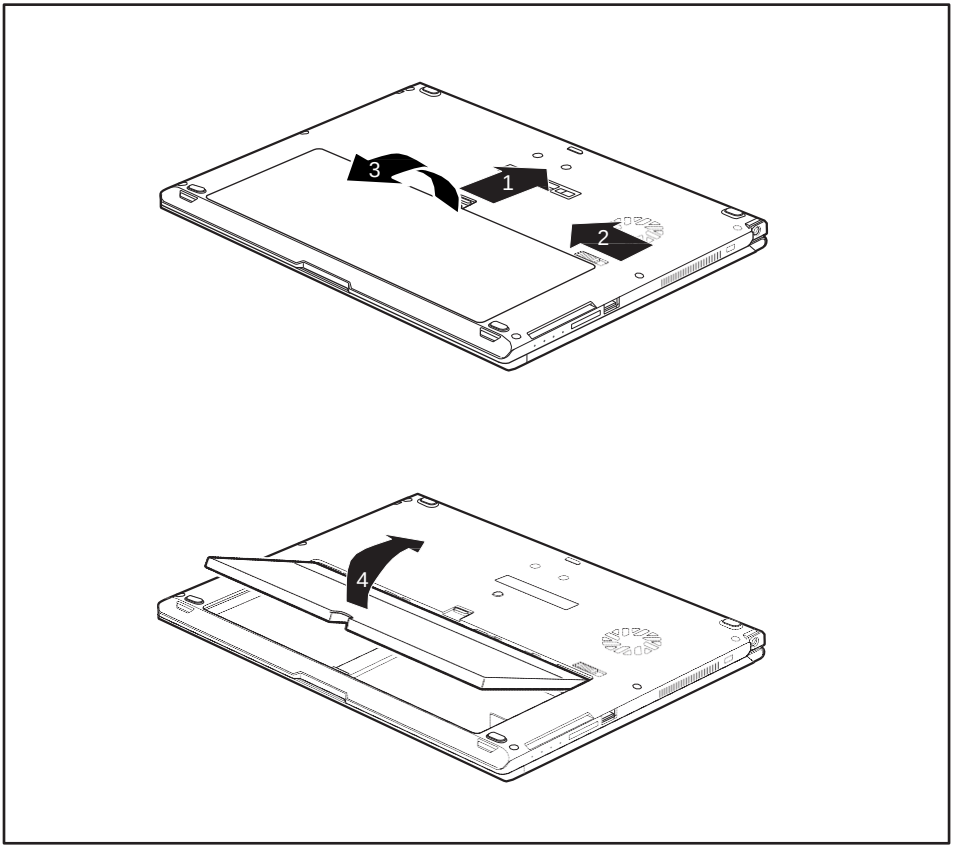

- ► Slide the Battery Lock slider switch in the direction of the arrow (1) and hold it in place.
- ► Slide the Battery Lock slider switch in direction of the arrow (2).
- ► Remove the battery compartment cover (3).
- ► Remove the battery from the battery compartment (4).

Installing a battery

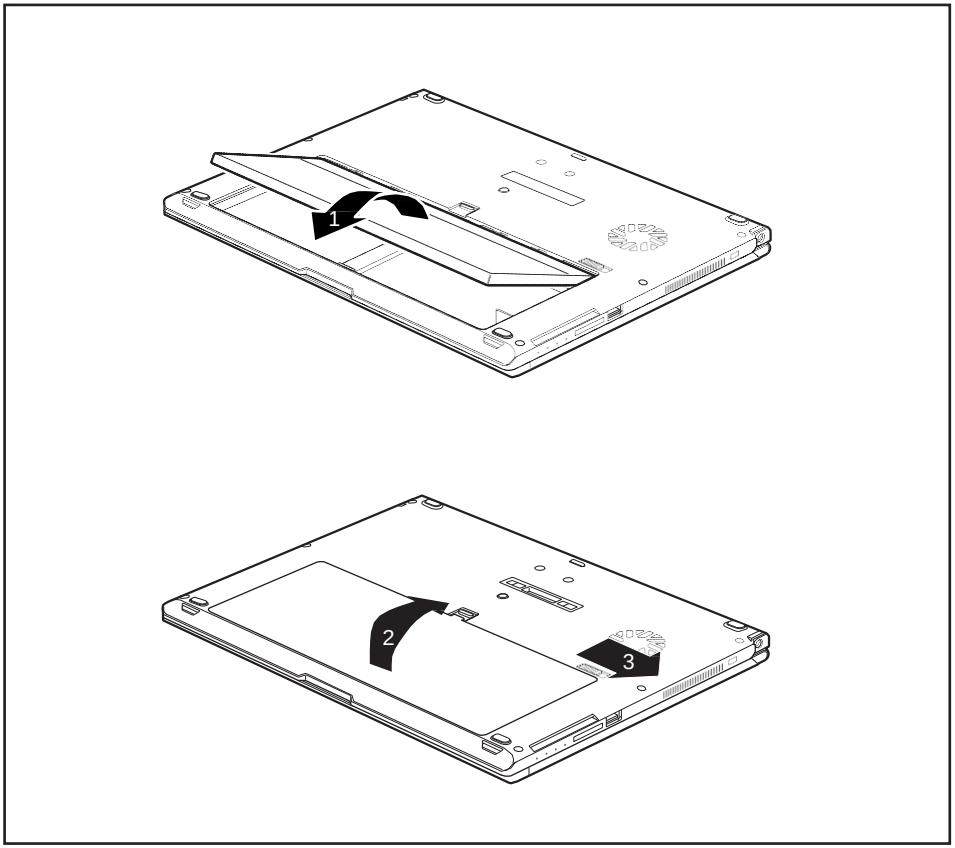

- ► Insert the battery in the battery compartment (1).
- ► Close the battery compartment cover (2).
- ► Slide the Battery Lock slider switch in direction of the arrow (3).
- ↳ The battery is secured.
- ► Turn the notebook the right way up again and place it on a flat surface.
- ► Reconnect the cables that were previously disconnected.

Using the energy saving functions

The notebook uses less power when the available energy-saving functions are used. You will then be able to work longer when using the battery before having to recharge it.

> **i** The energy efficiency is increased and environmental pollution is reduced. By choosing the best power options, you can make significant savings and at the same time help protect the environment.

When you fold down and close the LCD screen, depending on the setting in Windows, the notebook automatically enters a power saving mode.

- ► Set the energy saving functions in your Control Panel.
- ► Set the screen saver in your Control Panel.

or

- ► Right-click on the desktop. Activate the screen saver by clicking on *Personalize – Change Screen Saver*.

> **i** If you need further information about an option, you can get help with most settings by pressing F1 to open the Microsoft Help.

When the notebook is in energy saving mode, the following must be remembered:

> **i** During energy saving mode, open data is held in main memory or in a swap file on the hard disk.
>
> Never switch the notebook off while it is in an energy saving mode. If the built-in battery is nearly flat, close all open files and do not go into energy saving mode.

If you do not intend to use your notebook for a long period of time:

- ► Exit energy saving mode if necessary by moving the mouse, making an entry at the keyboard or by switching on the notebook.
- ► Close all opened programs and completely shut down the notebook.

Memory cards

Your notebook is equipped with an integrated memory card reader.

Follow the manufacturer's instructions when handling the memory cards.

Supported format

The memory card reader supports the following format:

- Secure Digital (SD™ Card)
- SDHC
- SDXC

Inserting the memory card

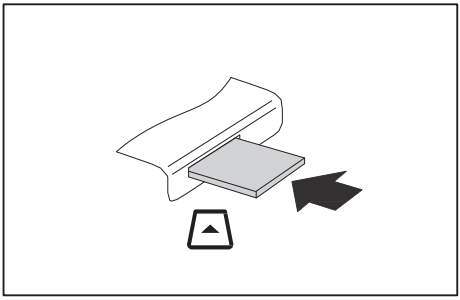

► Carefully slide the memory card into the slot. The label should be facing upward. Do not apply excessive force, as otherwise the delicate contact surfaces could be damaged.

↳ Depending on the particular type used, the memory card may protrude slightly from the slot.

Removing the memory card

To avoid any loss of data, always follow the correct procedure for removing the card (see the documentation for your operating system).

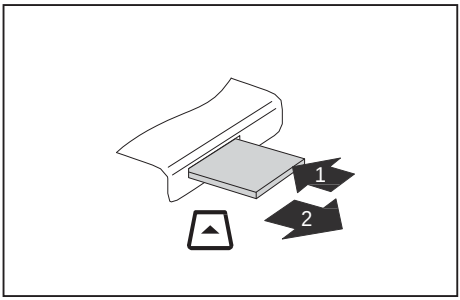

► On devices with card locking: Press on the memory card (1).

↳ The memory card is released and can now be removed.

► Pull the memory card out of the slot (2).

Speaker and microphone

You can find information about the exact position of the speaker and microphone in chapter "Ports and controls", Page 9.

Please refer to chapter "Key combinations", Page 44 for information on setting the volume and also enabling/disabling the speakers using key combinations.

If you attach an external microphone, the built-in microphone is disabled.

When you connect headphones or external speakers, the built-in speakers are disabled.

You can find information on connecting headphones and a microphone in chapter "Connecting external devices", Page 72.

SIM card

A SIM Card (Subscriber Identity Module) is a chip card which is inserted in a mobile telephone or notebook and, together with an integrated 4G module, enables access to a mobile radio network.

Follow the instructions supplied by the provider of the SIM card.

Inserting a SIM card

► Remove the battery, see Chapter "Removing a battery", Page 49.

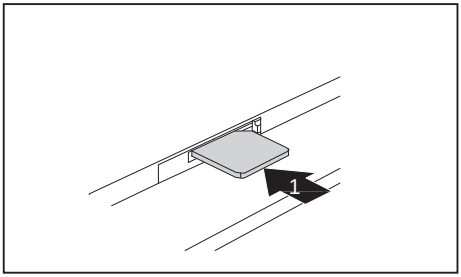

► Slide the SIM card into the slot (1), as shown in the battery compartment, until you feel it engage.

► Install the battery again, see Chapter "Installing a battery", Page 51.

Removing a SIM card

► Remove the battery, see Chapter "Removing a battery", Page 49.

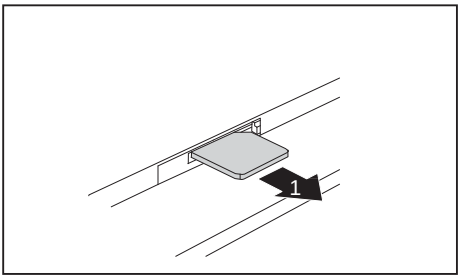

► Press on the edge of the SIM card so that it jumps up slightly out of the slot.

► Pull the SIM card out of the slot in the direction of the arrow (1).

► Install the battery again, see Chapter "Installing a battery", Page 51.

Optional wireless LAN/Bluetooth/4G radio components

The installation of radio components not approved by Fujitsu will invalidate the certifications issued for this device.

Depending on the device configuration you ordered, your device will be equipped with wireless LAN, Bluetooth or 4G.

Switching the wireless components on and off

► Press the key combination Fn + F5 to start the *WirelessSelector*.

↳ The wireless component indicator will illuminate when one or more wireless components are switched on.

The Bluetooth and 4G modules and the wireless LAN transmission unit (antenna) will all be switched off when you switch off the wireless components.

Pay attention to the additional safety notes for devices with wireless components provided in the "Safety" manual.

Details on using a wireless LAN can be found in the online help system included in the wireless LAN software.

You can obtain more information on 4G from your service provider.

Setting up WLAN access

- Requirement: A WLAN must be available and you must have the corresponding access information.

Information on configuring the WLAN access can be found in the documentation for your operating system.

Further information on WLAN and Bluetooth

For further information about WLAN or Bluetooth, see the Appendix of this manual.

For WLAN specifications, see chapter "WLAN specifications", Page 92.

Access via 4G

If you have ordered a 4G module, your device will already be prepared when you receive it.

You will find information on establishing the connection with the 4G network in the documentation for the hardware you plan to use.

You will find information on establishing the connection with the UMTS / LTE network in the documentation for the hardware used.

You device can connect to the internet via UMTS / LTE. To do this, use one of the following types of connection.

- Integrated UMTS / LTE module (availability dependent on your model variant
- A USB dongle (a USB stick with your mobile phone provider's SIM card)
- a mobile end-device (e.g. mobile phone with Bluetooth or cable connection)
- UMTS ExpressCard (fits into the ExpressCard slot on your device)

UMTS/LTE antenna

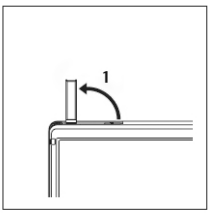

To improve the signal strength of the UMTS/LTE, fold out the UMTS/LTE antenna in the direction of the arrow (1).

Note:
When your device is in tablet mode, it should not be used in Secondary Landscape position with the antenna in the open position.

Ethernet and LAN

You can use an Ethernet LAN when you use a LAN adapter, which can be obtained as an option. You can use it to establish a connection to a local network (LAN = Local Area Network).

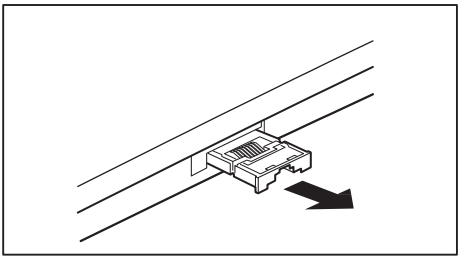

► Pull the LAN adapter out of the LAN port on the notebook in the direction of the arrow.

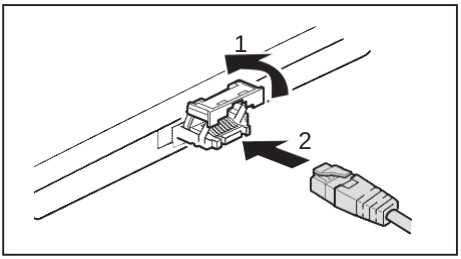

► Push the LAN adapter upwards in the direction of the arrow (1).

► Plug the network cable into the LAN adapter (2).

► Connect the network cable to your network port.

i

Your network administrator can help you to configure and use the LAN connections.

The network cable is not included in the delivery scope. This type of cable can be obtained from a specialist dealer.

Your port replicator (optional)

Your port replicator is a device that helps you to quickly connect your notebook to your peripheral devices, such as a monitor, printer, etc.

The features offered by the port replicator include standard ports for monitor, audio, mouse and keyboard.

You need only dock the notebook in order to work with your peripheral devices.

Ports on the port replicator

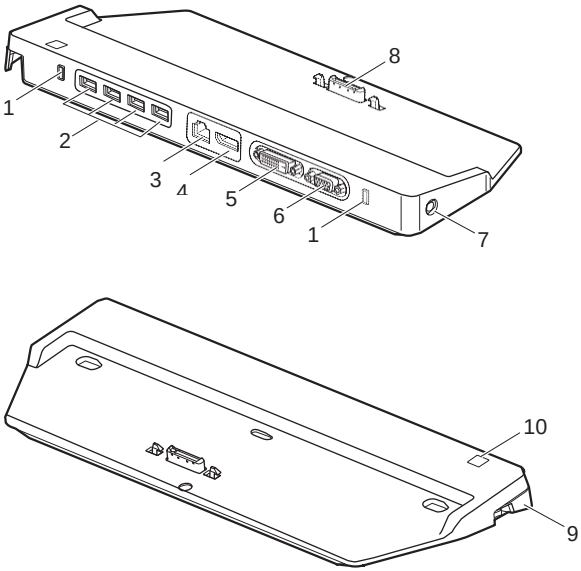

1 = Security Lock
2 = USB ports
3 = LAN port
4 = DisplayPort
5 = DVI port
6 = VGA monitor port
7 = DC input connector (DC IN)
8 = Connector on the port replicator for the docking port on the bottom of the notebook
9 = Release
10 = ON/OFF button

Setting up the port replicator

Select a suitable location for the port replicator before setting it up. In doing so, please follow these instructions:

- Never place the port replicator on a soft surface (e.g. carpeting, upholstered furniture, bed). This can block the air vents of the notebook and cause overheating and damage.
- Place the port replicator on a stable, flat and anti-slip surface. Please note that the rubber feet may mark certain types of surfaces.
- Never place the port replicator and the AC adapter on a heat-sensitive surface.
- Do not expose the port replicator to extreme environmental conditions.
  Protect the port replicator from dust, humidity and heat.

Connecting the notebook to the port replicator

► Disconnect the AC adapter cable from the DC jack (DC IN) of the notebook.

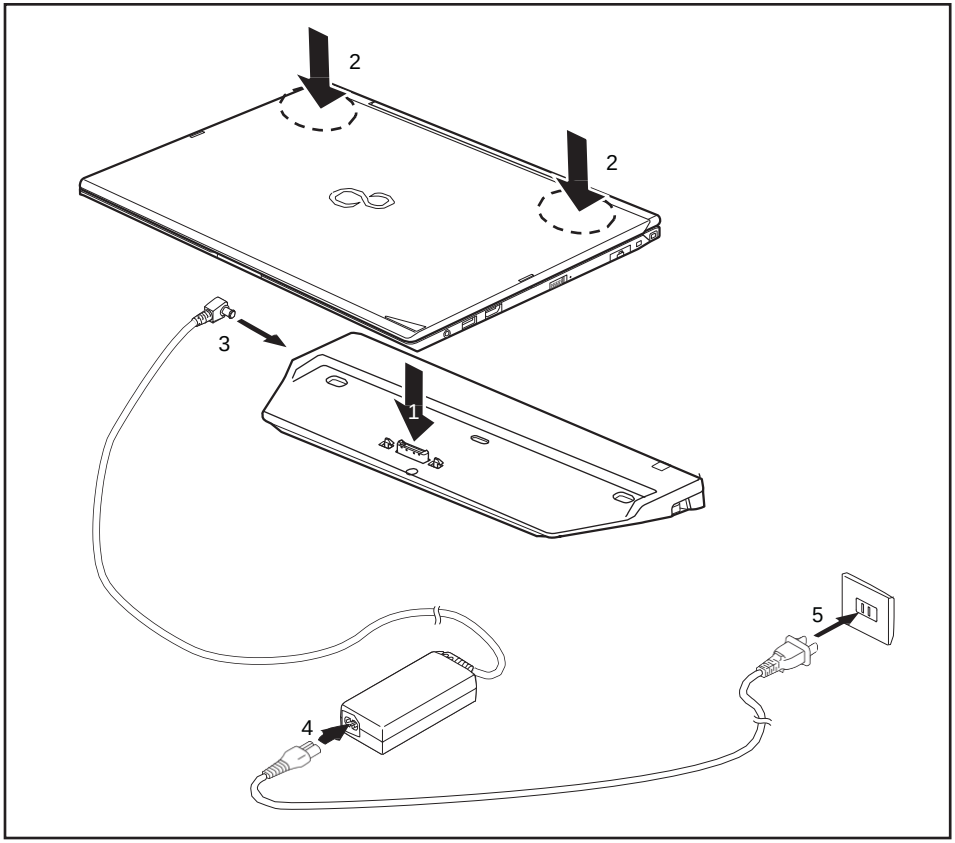

► Place the notebook on the port replicator so that the connector on the underside of the notebook aligns with the connector on the Port Replicator (1).

► Press down on the notebook's rear corners so that it locks into position (2).

► Connect the AC adapter cable to the DC jack (DC IN) of the Port Replicator (3).

► Connect the AC cable to the AC adapter (4).

► Plug the AC cable into the power outlet (5).

Switching on the notebook via the port replicator

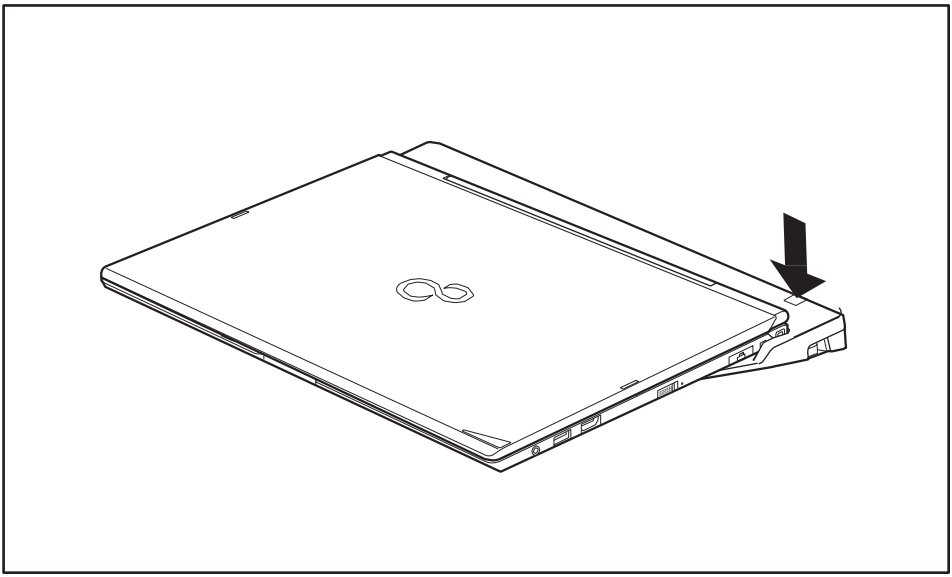

► Press the ON/OFF button on the port replicator to switch the notebook on.

Switching off notebook via port replicator

► Close all applications and then shut down your operating system (please refer to the manual for the operating system).

i

If the notebook cannot be shut down properly, press the ON/OFF button on the port replicator for approx. four seconds. The notebook will switch off. However, any unsaved data may be lost in the process.

Disconnecting the notebook from the port replicator

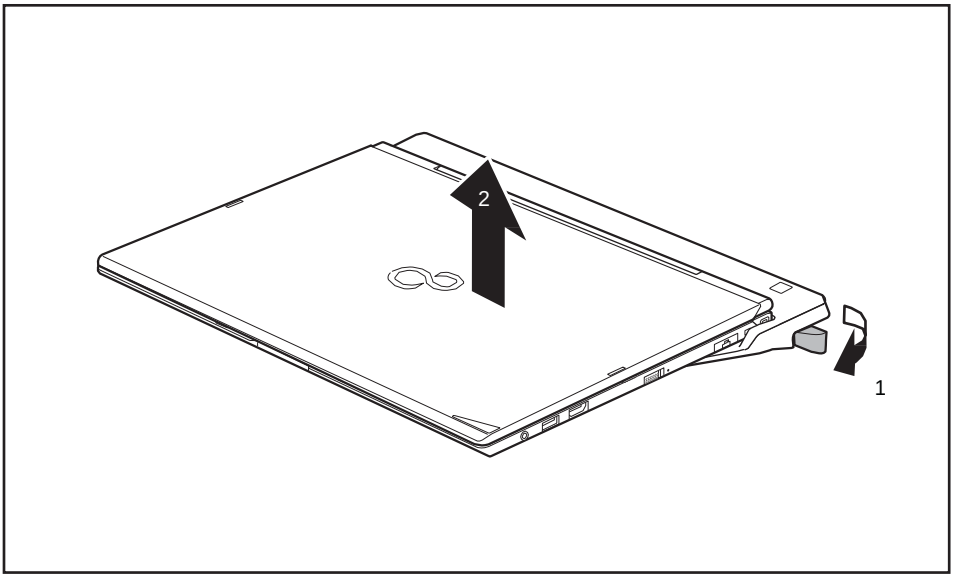

► Pull the unlocking lever in the direction of the arrow (1), until you hear the notebook unlatch.

► Lift off the notebook (2).

Security functions

Your notebook has a variety of security functions that you can use to protect your system and your personal data from unauthorized access.

This chapter explains how to use these functions, and what the benefits are.

Please remember that in some cases, for example, forgetting your password, you may be locked out of the system and unable to access your data. Therefore, please note the following information:

- Make regular backups to external optical disks such as external hard drives, CDs, DVDs or Blu-ray Discs.
- Some security functions need you to choose passwords. Make a note of the passwords and keep them in a safe place.

If you forget your passwords you will need to contact our Service Desk. Deletion or resetting of passwords are not covered by your warranty and a charge will be made for assistance.

Brief overview of the security functions

Detailed information about the security equipment of your device can be found in the "Professional Notebook" manual, on the "Drivers & Utilities" CD/DVD or on our website at "http://www.fujitsu.com/us/support/".

Security function	Type of protection	Preparation
Security Lock	Mechanical	Fit and lock the Kensington Lock Cable (accessory).
Fingerprint sensor (device dependent)	Biometric	Install the supplied fingerprint software.
BIOS password protection	Password protection for the *BIOS Setup*, operating system and hard disk with supervisor and user password. The passwords consist of a maximum of eight alphanumeric characters.	Specify at least one supervisor password in the *BIOS Setup* and activate the password protection for the operating system and hard disk as desired.
Boot from Removable Media	Prevents unauthorized booting of an operating system from external media (e.g. USB stick, USB CD-ROM drive, etc.).	In the BIOS Setup, go to the *Security* menu and edit the *Boot from Removable Media* option.
Owner Information	Display service desk or owner information during the boot process.	In the BIOS Setup, go to the *Security* menu and edit the *Owner Information* option.
SmartCard reader (device dependent)	PIN and SmartCard protection for the operating system	To use the SmartCard reader functions, install the supplied (or other suitable) software.
Trusted Platform Module (device dependent)	Identification and authentication of the notebook	Define a supervisor password in the *BIOS Setup* and enable the TPM (*Security Chip*).

Configuring the fingerprint sensor

The fingerprint sensor can record the image of a fingerprint. With additional fingerprint software, this image can be processed and used instead of a password.

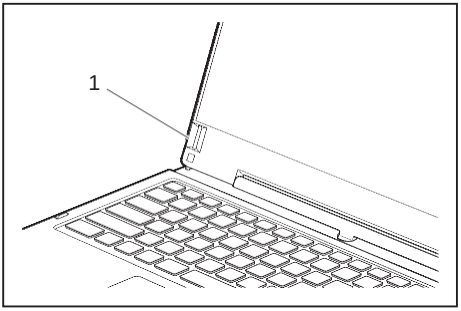

► Install the fingerprint software to be able to use the fingerprint sensor (1).

Using the Security Lock

Your device comes with a Security Lock mechanism for the Kensington Lock Cable. You can use the Kensington Lock Cable, a sturdy steel cable, to help protect your notebook from theft. The Kensington Lock Cable is available as an accessory.

i

Fujitsu recommends the use of a combination lock.

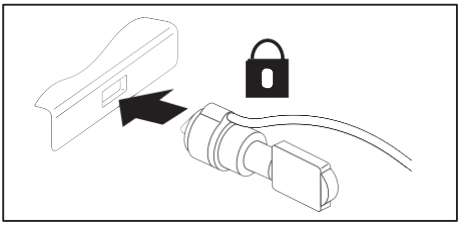

► Fit the Kensington Lock Cable to the mechanism on your notebook.

i

Attach another Kensington Lock Cable to your port replicator to protect your port replicator from theft as well. There are two security lock devices on your port replicator.

Configuring password protection in BIOS Setup Utility

Before using the various options for password protection in the *BIOS Setup Utility*, please proceed as follows to increase data security:

Make a note of the passwords and keep them in a safe place. If you forget your supervisor HDD password you will not be able to access your notebook. Passwords are not covered by your warranty and a charge will be made for assistance.

Your password can be up to eight characters long and can contain letters and numbers. No distinction is made between uppercase and lowercase.

Protecting BIOS Setup Utility (supervisor HDD password and user HDD password)

If you have opened these operating instructions on the screen, we recommend that you print them out. You cannot call up the instructions on the screen while you are setting up the password.

The supervisor HDD password and the user HDD password both prevent unauthorized use of the *BIOS Setup Utility*. The supervisor HDD password allows you to access all of the functions of the *BIOS Setup Utility*, while the user HDD password will only give you access to some of the functions. You can only set a user HDD password when a supervisor HDD password has already been assigned.

Calling and using the *BIOS Setup Utility* is described in the chapter "Settings in BIOS Setup Utility", Page 79.

Assigning the supervisor and user HDD passwords

- ► Start the *BIOS Setup Utility* and go to the *Security* menu.
- ► Select the *Set Supervisor Password* field and press the Enter key.
- ↳ With *Enter new Password*: you are asked to enter a password.
- ► Enter the password and press the Enter key.
- ↳ *Confirm new Password* requires you to confirm the password.
- ► Enter the password again and press the Enter key.
- ↳ *Changes have been saved* is displayed as a confirmation that the new password has been saved.
- ► To set the user HDD password, select *Set User Password* and proceed exactly as when configuring the supervisor HDD password.
- ↳ If you do not want to change any other settings, you can exit *BIOS Setup Utility*.
- ► In the *Exit* menu, select the option *Save Changes & Exit*.
- ► Select *Yes* and press the Enter key.
- ↳ The notebook is then rebooted and the new password comes into effect. It will now be necessary to first enter your supervisor or user HDD password in order to open the *BIOS Setup Utility*. Please note that the user HDD password only provides access to a few of the BIOS settings.

Changing the supervisor HDD password or user HDD password

You can only change the supervisor HDD password when you have logged into the *BIOS Setup Utility* with the supervisor HDD password.

► Start the *BIOS Setup Utility* and go to the *Security* menu.

► When changing the password, proceed exactly as when assigning a password.

Removing passwords

To remove a password (without setting a new password) perform the following steps:

► Start the *BIOS Setup Utility* and go to the *Security* menu.

► Highlight the *Set Supervisor Password* or *Set User Password* field and press the Enter key.

↳ You will be requested to enter the current password by the *Enter Current Password* prompt. *Enter New Password* will appear and you will be requested to enter a new password.

► Press the Enter key twice at this request.

► In the *Exit* menu, select the option *Save Changes & Exit*.

► Select *Yes* and press the Enter key.

↳ The notebook will now reboot with the password removed.
With the supervisor HDD password, you simultaneously deactivate the user password.

Password protection for booting the operating system

i

You can also prevent booting of the operating system with the supervisor HDD password you have set in the *BIOS Setup Utility* (see section "Assigning the supervisor and user HDD passwords", Page 66).

Activating system protection

► Start the *BIOS Setup Utility* and go to the *Security* menu.

► Select the *Password on Boot* option and press the Enter key.

► Select the option you require (*Disabled*, *First Boot* or *Every Boot*) and press the enter key

► Select the *Save Changes & Exit* option under *Exit*.

↳ The notebook will reboot. You will be prompted to enter your password (the supervisor HDD password).

Deactivating system protection

► Start the *BIOS Setup Utility* and go to the *Security* menu.

► Select the *Password on Boot* option and press the Enter key.

► Select the *Disabled* option and press the Enter key.

↳ If you do not want to change any other settings, you can exit *BIOS Setup Utility*.

► Select the *Save Changes & Exit* option under *Exit*.

↳ The notebook will reboot. The system is no longer password-protected.

Password protection for the hard disk

i

The hard disk password prevents unauthorized access to the hard disk drives and is checked internally each time the system is booted. The condition for this is that you have assigned at least the supervisor HDD password.

Activating hard disk protection

► Call up the *BIOS Setup* and select the *Security* menu.

↳ If you have not assigned BIOS passwords yet, define the supervisor and the user HDD password now, if desired (see "Security functions", Page 63).

► Mark the *Hard Disk Security* field and press the Enter key.

► In the area *Drive0*, mark the field *Set Master Password* and press the Enter key.

↳ *Enter new Password* then appears and you are asked to enter a password.

► Enter the password and press the Enter key.

↳ *Confirm new Password* requires you to confirm the password.

► Enter the password again and press the Enter key.

↳ With *Setup Notice: Changes have been saved* you receive confirmation that the new password has been saved.

► If you wish to enter a password for a second hard disk (*Drive1*), in the area *Drive1* mark the field *Set Master Password* and proceed in exactly the same way as for the set up of the first hard disk (*Drive0*).

↳ The field *Password Entry on Boot* is set to *Enabled* by default. You can exit the *BIOS Setup* once you have finished changing the settings.

► From the *Exit* menu, choose the option *Exit Saving Changes*.

► Press the Enter key and select *Yes*.

↳ The notebook reboots and your hard disk is now protected with a password. The password prompt is enabled as soon as the notebook has rebooted.

Deactivating hard disk protection

To cancel a password (without setting a new password) proceed as follows:

► Call up the *BIOS Setup* and select the *Security* menu.

► Mark the *Hard Disk Security* field and press the Enter key.

► In the area *Drive0*, mark the field *Set Master Password* and press the Enter key.

↳ With the prompt *Enter current Password* you are first asked to enter the old password again. With *Enter new Password* you are then prompted to enter a new password.

► After the request, press the Enter key three times.

► From the *Exit* menu, choose the option *Exit Saving Changes*.

► Press the Enter key and select *Yes*.

↳ The notebook reboots and there is no longer any password protection for this hard disk.

► If you wish to remove a password for a second hard disk (*Drive1*), in the area *Drive1* mark the field *Set Master Password* and proceed in exactly the same way as for the removal of the first hard disk (*Drive0*).

SmartCard reader

SmartCards are not supplied as standard equipment. You can use all SmartCards that comply with the ISO standard 7816-1, -2 or -3. These SmartCards are available from various manufacturers.

With the appropriate software you can use your SmartCard as an alternative to password protection, but also as a digital signature, for encrypting your e-mails or for home banking.

We recommend that you always use two SmartCards. Always keep one of the SmartCards in a safe place if you are carrying the other SmartCard with you.

Inserting the SmartCard

Do not use force when inserting and removing the SmartCard.

Make sure that foreign objects do not fall into the SmartCard reader.

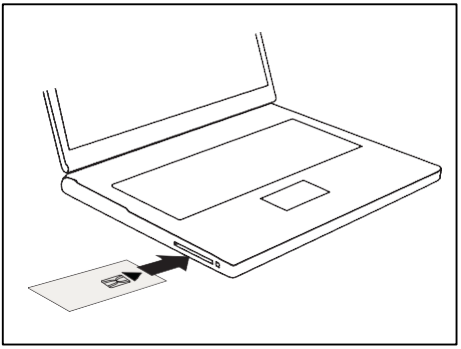

► Slide the SmartCard into the SmartCard reader with the chip facing upwards (or downwards depending on the device) and to the front.

Using the security function of the tablet buttons

If you have allotted a supervisor and/or user HDD password in the form of tablet button combinations as described below, you can use the tablet buttons to enter this when you start your device.

Assigning the supervisor password

► Select Start - Run.

► Enter the following information in the prompt: `C:\Program Files\Fujitsu\Security Panel Application\Supervisor\FJSECS.EXE`.

► Confirm with [Enter].

► Follow the instructions on the screen.

Assigning the user password

► Select *Start - All Programs*.
► Select *Security Panel Application - Security Panel Application*.
► Follow the instructions on the screen.

Entering passwords via the tablet buttons

The passwords for entry via the tablet buttons usually consist of a combination of buttons, e.g. button [2] + button [3], followed by button [1] and button [ENT].

► Enter your password using buttons [1] to [4].
► Confirm with [ENT].
↳ The device will be unlocked.

Trusted Platform Module - TPM (device dependent)

To use the TPM, you **must** enable the TPM in the *BIOS Setup before the software is installed*. The requirement for this is that you have assigned at least the supervisor HDD password (see "Security functions", Page 63).

Enabling TPM

- Requirement: You have assigned a supervisor HDD password (see "Security functions", Page 63).

► Call BIOS Setup and select the *Security* menu.

► Mark the *TPM Security Chip Setting* field and press the Enter key.

► Select the entry *Enabled* to enable the TPM

↳ Once you have enabled the TPM the *Clear Security Chip* menu item appears.
You can clear the holder in the TPM using *Clear Security Chip*. With *Enabled*, all secret keys (e.g. SRK - Storage Root Keys, AIK - Attestation Identity Keys etc.) generated by applications are deleted.

Take note that you can then no longer access the data you have encrypted on the holder-based keys!

► Select the *Exit Saving Changes* option in the Exit menu.

► Press the Enter key and select *Yes*.

↳ The notebook restarts and the TPM is switched on after the reboot.

Disabling TPM

- Requirement: You have assigned a supervisor HDD password (see "Security functions", Page 63).

► Call BIOS Setup and select the *Security* menu.

► Mark the *TPM Security Chip Setting* field and press the Enter key.

► Select the entry *Disabled* to disable the TPM.

► From the *Exit* menu, choose the option *Exit Saving Changes*.

► Press the Enter key and select *Yes*.

↳ The notebook will now reboot with TPM deactivated.

Connecting external devices

Under all circumstances, please observe the safety notes provided in the "Important notes", Page 12 chapter before connecting or disconnecting any devices to or from your notebook.

Always read the documentation supplied with the device you wish to connect.

Never connect or disconnect cables during a thunderstorm.

Never pull at a cable when disconnecting it. Always grasp the plug.

Follow the steps in the sequence below when connecting or disconnecting devices to your notebook:

With some devices such as USB devices, it is not necessary to switch off the notebook and the device before connecting/disconnecting. For more information about whether or not devices need to be switched off, please refer to the documentation supplied with the external device.

Some of the external devices require special drivers (see the operating system and external device documentation).

Connecting devices to the notebook

1. Switch the notebook and all external devices off.
2. Unplug the AC plug of the notebook and all affected devices from the power outlets.
3. Connect the cables for all the external devices according to the instructions.
4. Plug all the AC plugs into the power outlets.

Disconnecting devices from the notebook

1. Switch off the notebook and all external devices.
2. Unplug the AC plug of the notebook and all affected devices from the power outlets.
3. Disconnect the cables for all the external devices following the instructions.

HDMI port

The HDMI port on your notebook can be used to connect an external amplifier, LCD TV or a plasma TV with an HDMI connection.

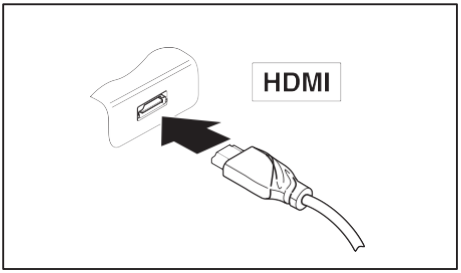

- ► Connect the data cable to the external device.
- ► Connect the data cable to the HDMI port of the notebook.

Connecting an external monitor to the port replicator

An analog monitor is connected to the analog VGA monitor port, a digital monitor to the DisplayPort or to the DVI-D monitor port on the optional port replicator. Monitor output is limited to a maximum of two monitors at any one time (see "Key combinations", Page 44, section "Toggle output monitor").

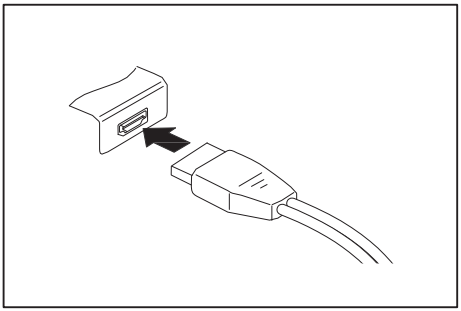

Digital DisplayPort

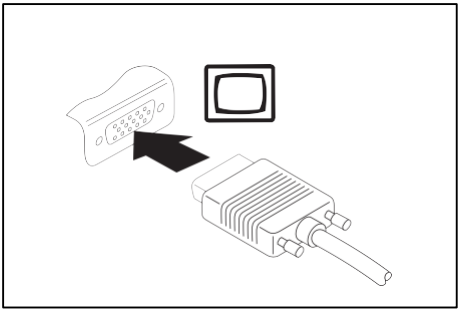

Analog VGA monitor port

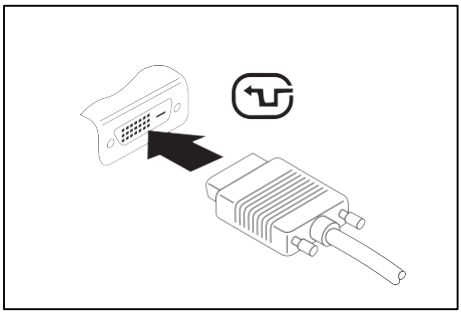

Digital DVI-D monitor port

- ► Switch off the notebook and the external monitor.
- ► Plug the data cable of the external monitor into the monitor port.
- ► First switch on the external monitor and then the notebook.

i

You can also switch back and forth between the external screen and the LCD screen of the notebook, see chapter "Key combinations", Page 44.

You can display the same picture on the external monitor and the notebook LCD screen simultaneously.

Connecting USB devices

On the USB ports you can connect external devices that also have a USB port (e.g. a DVD drive, a printer, a scanner or a modem).

USB devices are hot-pluggable. This means you can connect and disconnect the cables of USB devices while the operating system is running.

USB 1.x has a maximum data transfer rate of 12 Mbps.

USB 2.0 has a data transfer rate of up to 480 Mbps.

USB 3.0 has a data transfer rate of up to 5 Gbps.

Additional information can be found in the documentation for the USB devices.

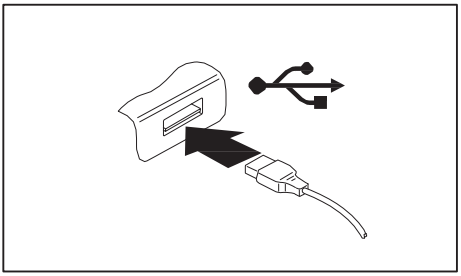

- ► Connect the data cable to the external device.
- ► Connect the data cable to a USB port of the notebook.

Device drivers

USB devices will be automatically recognized and installed by your operating system.

USB port with charging function (Anytime USB charge)

It is recommended that the notebook be operated with the AC adapter connected whenever the USB port with charging function is in use, as this function will drain the battery more quickly if an external USB device is being charged.

The AC adapter must already be connected when the notebook is switched off, as otherwise the USB charging function will be disabled and the connected USB devices will not be charged.

Some USB devices (e.g. mobile telephony) require a driver in order to utilize the USB charging function. In this case the USB charging function will not work when the notebook is switched off, as no drivers are active when the notebook is switched off.

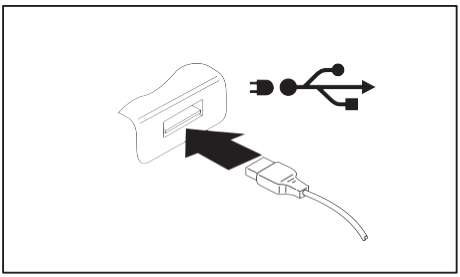

You can use this USB port to charge or supply power to a USB device (e.g. to charge a PDA or a mobile phone or to connect a USB lamp), even if the notebook is switched off.

How to remove USB devices correctly

Always correctly remove the device according to the rules described below, to ensure that none of your data is lost.

- ► With the left mouse button, click on the symbol in the taskbar for safe removal of hardware.
- ► Select the device you wish to shut down and remove.
- ► Press the "Enter" key.
- ↳ Wait for the dialog box which tells you that it is now safe to remove the device.

Headphones port

You can connect headphones or external speakers to your notebook via the headphones port.

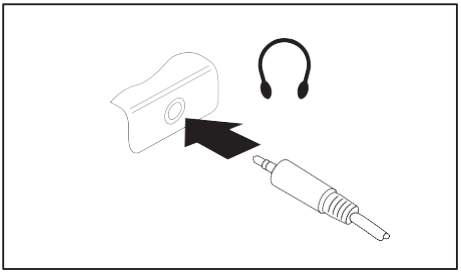

- ► Connect the audio cable to the external device.
- ► Connect the audio cable to the headphones port of the notebook.
- ↳ The internal speakers are disabled.

i

If you buy a cable from a retailer, please note the following information:

The headphones port on your notebook is a "3.5 mm jack".

If you want to connect headphones or speakers you will need a "3.5 mm jack plug".

Removing and installing components during servicing

Only qualified technicians should repair your notebook. Unauthorized opening or incorrect repair may greatly endanger the user (electric shock, fire risk) and will invalidate your warranty.

Settings in BIOS Setup Utility

The *BIOS Setup Utility* allows you to set the system functions and the hardware configuration for the notebook.

When a notebook is delivered, the factory default settings are effective. You can change these settings in the menus of the *BIOS Setup Utility*. Any changes you make take effect as soon as you save and exit the *BIOS Setup Utility*.

The *BIOS Setup Utility* program contains the following menus:

About	Displays information relating to the BIOS, processor and notebook
System	Advanced system settings
Advanced	Configuration of various hardware components, such as mouse, keyboard, processor
Security	Password settings and security functions
Boot	Configuration of the start-up sequence
Exit	Exits the *BIOS Setup Utility*

Starting the BIOS Setup Utility

► Reboot the device (switch off/on or reboot the operating system).

↳ The following message (or similar) appears on the screen briefly at startup:
`<F2> BIOS Setup <F12> Boot Menu`

► Press the function key [F2].

► If a password has been assigned, enter the password and press the Enter key.

i If you have forgotten the password, contact your system administrator or contact our customer service center.

The *BIOS Setup Utility* starts.

BIOS Setup Utility operation

i Press the [F1] key to display help about operation of the *BIOS Setup Utility*. The description of the individual settings is shown in the right-hand window of the *BIOS Setup Utility*.

With the [F9] key you can load the default settings of the *BIOS Setup Utility*.

► Use the cursor keys [←] or [→] to select the menu you wish to access to make changes.

↳ The menu is displayed on the screen.

► Select the option you want to change with the cursor keys [↑] or [↓].

► Press the "Enter" key.

► Press the [ESC] key to exit the selected menu.

► For future reference, make a note of the changes you have made (for example, in this manual).

Exiting BIOS Setup Utility

You need to select the desired option in the *Exit* menu and activate it by pressing the Enter key:

Exit Saving Changes - save changes and exit BIOS Setup Utility

► To save the current menu settings and exit the *BIOS Setup Utility*, select *Exit Saving Changes* and *Yes*.

↳ The notebook is rebooted and the new settings come into effect.

Exit Discarding Changes - Reject changes and exit BIOS Setup Utility

► To discard the changes, select *Exit Discarding Changes* and *Yes*.

↳ The settings in place when *BIOS Setup Utility* was called remain effective. *BIOS Setup Utility* is terminated and the notebook is rebooted.

Load Setup Defaults – load default values

► To copy the standard entries for all menus of the *BIOS Setup Utility*, choose *Load Setup Defaults* and *Yes*.

Discard Changes - Discard Changes without exiting BIOS Setup Utility

► To discard the changes you have made, select *Discard Changes* and *Yes*.

↳ The settings in place when *BIOS Setup Utility* was called remain effective. You can now make additional settings in the *BIOS Setup Utility*.

► If you want to exit the *BIOS Setup Utility* with these settings, select *Exit Saving Changes* and *Yes*.

Save Changes - save changes without exiting the BIOS Setup Utility

► To save the changes, select *Save Changes* and *Yes*.

↳ The changes are saved. You can now make additional settings in the BIOS Setup Utility.

► If you want to exit BIOS Setup Utility with these settings, choose *Exit Saving Changes* and *Yes*.

Save changes and power off

► To save the changes and switch off your device, select *Save Changes and Power Off* and *Yes*.

↳ The changes are saved. Your device is shut down.

Troubleshooting and tips

If a fault occurs, try to correct it as described. If you are unable to correct the problem, proceed as follows:

► Make a note of the steps and the circumstances that led to the fault. Also make a note of any error messages displayed.

► Switch the notebook off.

► Please contact the Hotline/Service Desk.

You can contact Fujitsu Service and Support in the following ways:

- Toll free number: 1-800-Fujitsu (1-800-838-5487)
- Website: "http://solutions.us.fujitsu.com/www/content/support/contact/index.php"

Please have the following information ready when you call:

- The model name and serial number of the notebook. The serial number is located on a sticker on the underside of the notebook.
- Notes of any messages that appear on the screen and information on acoustic signals.
- Any changes you have made to the hardware or software since receiving the notebook.
- Any changes you have made to the *BIOS Setup* settings since receiving the notebook.
- Your system configuration and all peripheral devices connected to your system.
- Your sales contract.

Our notebooks have been designed primarily with mobile applications in mind. This means that considerable effort has been made to optimize components and equipment in terms of weight, space and energy requirements. Depending on the particular configuration you have purchased, it is possible that functionality may be slightly reduced compared to a desktop PC if you are running processor-intensive gaming software, e.g. games with intensive 3D graphics. Updating your hardware with drivers which have not been approved by Fujitsu may result in performance losses, data losses or malfunction of the equipment. A list of approved drivers and current BIOS versions can be downloaded from: "http://solutions.us.fujitsu.com"

Help if problems occur

Should you encounter a problem with your computer that you cannot resolve yourself:

► Note the ID number of your device. The ID number is found on the type rating plate on the back or underside of the casing.

► For further clarification of the problem, contact the Fujitsu Service Desk. When you do this, please have ready the ID number and serial number of your system.

Recovering your Factory Image

In the event you need to restore your original Factory Image refer to the steps in the Appendix of this manual.

The notebook’s date or time is incorrect

Cause	Troubleshooting
Time and date are wrongly set.	► With the *BIOS-Setup-Utility*, you can set the date and time in the *Main* menu.
Date and time are still set incorrectly after switching on the notebook.	► Please contact your sales outlet or our hotline/service desk.

Battery indicator does not illuminate

Cause	Troubleshooting
The battery is not installed correctly.	► Switch the notebook off. ► Check whether the battery is installed correctly in its compartment. ► Switch the notebook on.
The battery is discharged.	► Charge the battery. **or** ► Install a charged battery. **or** ► Connect the notebook to a AC outlet using the AC adapter.

When certain characters are entered on the keyboard, only numerals are written

Cause	Troubleshooting
The virtual number keys of your device are activated, see "Virtual number keys", Page 43	► Press the Num button.

The notebook’s LCD screen remains blank

Cause	Troubleshooting
Screen is switched off.	► Press a key or touch the Clickpad.
External monitor or television set connected.	► Press the key combination for changing over the screen output, see "Key combinations", Page 44.

The LCD screen of the notebook is difficult to read

Cause	Troubleshooting
Reflected glare	► Turn the notebook or alter the tilt of the LCD screen. ► Increase the brightness of the screen.

The external monitor remains blank

Cause	Troubleshooting
Monitor is switched off.	► Switch the external monitor on.
Power saving has been activated (monitor is blank).	► Press any key to continue.
Brightness is set to dark.	► Adjust the brightness of the monitor.
Screen output is set to the notebook's LCD screen	► Press the key combination for changing over the screen output, see "Key combinations", Page 44.
The external monitor's AC cable or data cable is not connected properly.	► Switch off the external monitor and the notebook. ► Check whether the AC cable is plugged properly into the external monitor and into the power outlet. ► Check whether the data cable is properly connected to the notebook and the external monitor (if it is plugged in with a connector). ► Switch on the external monitor and the notebook.

The external monitor is blank or the image is unstable

Cause	Troubleshooting
The wrong external monitor has been selected or the wrong screen resolution has been set for the application program.	► Terminate the application program under Windows by pressing Alt + F4. If the error persists after terminating the program, use the key combination for switching the screen output (see "Key combinations", Page 44), in order to switch to the LCD screen of the notebook. Change the following setting: ► Set the screen resolution: Set the screen resolution as described in the documentation for your operating system. ► Select monitor: Select monitor 1 or 2 as described in the documentation for your operating system.

The cursor does not correctly follow the stylus movements

Cause	Troubleshooting
Stylus incorrectly calibrated.	► Calibrate the stylus as shown under *Hardware and Sound / Tablet PC Settings* in the Control Panel, see "Adjusting the stylus", Page 37 and "Calibrating the stylus", Page 37.

Stylus input not working

Cause	Troubleshooting
Incorrect driver installed.	► If your device is one which can only be operated using the stylus, install the driver for the standard model. **or** ► If your device is one which can be operated using the stylus and by finger, install the driver for the "Dual Digitizer" model.

The notebook does not start after switching it on

Cause	Troubleshooting
The battery is not installed correctly.	► Check whether the battery is installed correctly in its compartment. ► Switch the notebook on.
The battery is discharged.	► Charge the battery. **or** ► Insert a charged battery. **or** ► Connect the AC adapter to the notebook.
The AC adapter is not properly connected.	► Check whether the AC adapter is properly connected to the notebook. ► Switch the notebook on.

The notebook stops working

Cause	Troubleshooting
The notebook is in energy saving mode.	► End energy saving mode.
An application program has caused the malfunction.	► Close the application program or restart the notebook (by restarting the operating system or switching the device off and back on again).
The battery is discharged.	► Charge the battery. **or** ► Insert a charged battery. **or** ► Connect the AC adapter to the notebook.

The printer does not print

Cause	Troubleshooting
The printer is not switched on.	► Make sure that the printer is switched on and ready for operation (refer to the documentation supplied with the printer).
The printer is not connected correctly.	► Check that the data cable connecting the notebook to the printer is properly connected.
The printer driver is faulty or not correctly installed, or it is the wrong printer driver.	► Check that the data cable connecting the notebook to the printer is properly connected. ► Check whether the correct printer driver is loaded (refer to the printer documentation).

The wireless connection to a network does not work

Cause	Troubleshooting
The wireless component is switched off.	► Switch the wireless component on (see "Switching the wireless components on and off", Page 55).
The wireless component is switched on. Despite this, the wireless connection to a network does not work.	► Check whether the wireless connection is enabled by the software. ► Further information on using the wireless component can be found in the help files.

The battery discharges too quickly

Cause	Troubleshooting
The battery is either too hot or too cold. In this case the battery indicator flashes.	► Move the notebook so that its temperature returns to within the normal range. ► If the operating time of the battery life is extremely short, the battery is probably too old. Replace the battery if necessary.
You may have an application running that consumes a great deal of power due to frequent accessing of the hard disk or optical drive.	► Use the AC adapter whenever possible.
The maximum brightness may have been set for the screen.	► Set the screen slightly darker with the key combination for *Decreasing the screen brightness* in order to reduce the amount of power being drawn.

SmartCard reader is not recognized

Cause	Troubleshooting
Chip card inserted incorrectly.	► Make sure you have inserted your SmartCard into the SmartCard reader with the chip facing upwards. ► Check whether the SmartCard you are using is supported. Your SmartCard must comply with the ISO standard 7816-1, -2, -3 and -4.

SmartCard PIN forgotten

Cause	Troubleshooting
PIN forgotten	► If you are working in a network, contact your system administrator, who can unlock your notebook with a Supervisor PIN.

SmartCard lost

Cause	Troubleshooting
SmartCard lost.	► If you are working in a network, contact your system administrator, who can boot your notebook with a Supervisor SmartCard.

User and/or supervisor SmartCard lost

Cause	Troubleshooting
User and/or supervisor SmartCard lost	► If you have lost your user SmartCard, you can continue working with the supervisor SmartCard. ► If you have lost the supervisor SmartCard, you can also continue working, but you no longer have all rights and cannot initialize another supervisor SmartCard.

Acoustic warning

Cause	Troubleshooting
A beep sounds every few seconds. The battery is almost flat.	► Charge the battery.

Error messages on the screen

This section describes the error messages generated by the BIOS Setup. Error messages displayed by the operating system or programs are described in the documentation for these programs.

i

If the error message appears repeatedly despite troubleshooting measures, contact the place of purchase or our customer service center.

Error message/cause	Troubleshooting
CMOS Battery Bad If the error message occurs repeatedly, the back-up battery in the notebook is flat.	► Contact your sales outlet or our customer service center.
System CMOS checksum bad - Default configuration used The system configuration information is incorrect.	► Switch the notebook off. ► Switch the notebook on. ► Press the function key F2 to access the *BIOS Setup*. ► In the *BIOS Setup*, select the *Exit* menu. ► Select the entry *Load Setup Defaults*. ► Select *OK* and press the Enter key.
Extended memory failed at offset: xxxx Failing Bits: zzzz zzzz When testing the extended memory. an error has resulted at the address xxxx.	► Check whether the additional memory module has been inserted correctly.
Failure Fixed Disk n The settings of the hard disk drive are incorrect.	► Start the *BIOS Setup* (*Primary Master* submenu) and select the correct settings.
Keyboard controller error	► Switch the notebook off with the ON/OFF button. ► Wait 3 - 5 seconds and switch on the notebook again.
Keyboard error	If you use an external keyboard: ► Check the connection and reboot the notebook.
nn Stuck key	► Make sure that no key is pressed.
Operating system not found	► Check in the *BIOS Setup* whether your hard disk has been set correctly. ► Make sure that the operating system is installed on the corresponding drive.
Press <F1> to resume, <F2> to SETUP This error message appears if an error occurs during the self-test before starting the operating system.	► Press the F1 function key to start the operating system. ► Press the function key F2 to access the *BIOS Setup*.

Error message/cause	Troubleshooting
Previous boot incomplete - Default configuration used Default values have been set for certain settings because of an error which occurred in the previous system boot. Check the settings in the BIOS Setup.	► Press the F1 function key when prompted to do so.
Real time clock error	► Contact your sales outlet or our customer service center.
nnnnK Shadow RAM failed at offset: xxxx Failing Bits: zzzz	► Contact your sales outlet or our customer service center.
System battery is dead - Replace and run SETUP	► Contact your sales outlet or our customer service center.
System cache error - Cache disabled	► Contact your sales outlet or our customer service center.
System timer error	► Contact your sales outlet or our customer service center.

Technical data

Notebook

General	
Processor	4th Generation Intel® Core™ with vPro™ technology (depending on the CPU)
4400 memory (SO DIMM)	Maximum 8 GB DDR3 1 fixed slot for 4 GB or 8 GB modules
Electrical data	
Safety regulations complied with	CE, GS (optional)
Protection class	II
Maximum power draw (when the notebook is switched on and the battery is charged):	65 W (without port replicator) / 80 W (with port replicator)
LCD screen	
Size	33.78 cm / 13.3" TFT WQHD
Resolution	2560 x 1440 pixels / 32-bit
Pixel class	II
Brightness control	12 levels
Technology	Wide-View High-Bright WXGA Display with LED Background Lighting
Digitizer and glass panel	• Dual Digitizer • Hardened glass
Webcam	FHD, 30 fps, (optional) with status indicator
Display adapter	
Chip	Intel® HD Graphics 4400
Maximum resolution of external monitor:	4096 x 2304 pixels
Dimensions	
Width x Depth x Height	320.8 mm x 235 mm x 17.1-19.3 mm / 12.63 inch x 9.25 inch x 0.67-0.76 inch
Weight depending on configuration	from 1.5 kg / 3.3 lbs
Input devices	
Keyboard	85 keys, with backlit keyboard
Clickpad	2 keys
Tablet buttons	1 Windows button, 2 volume buttons
Stylus	1 freely programmable rocker button
Slots	
Storage card slot	1 x SD Card
SmartCard slot	1 x
SIM card slot	1 x

Ports	
HDMI port	1 x
LAN port	Socket, RJ45
Microphone port / Line In / Headphones port / Line Out	3.5 mm stereo mini jack
Docking port	Socket, 54-pin
USB (Universal Serial Bus)	Total: 2x USB (1 x USB 3.0, 1 x USB 3.0 with charging function (Anytime USB charge)
Security Lock	1 x
Ambient conditions	
Environment class DIN IEC 721	7K1
Mechanism class DIN IEC 721	7M2
Operating temperature	5℃ .... 35℃ / 41°F .... 95°F
Transit temperature (2K2)	–15°C .... 60°C / 5°F .... 140°F

WLAN specifications

Type of network	Integrated Dual-Band Wireless-N 7260 device conforms to IEEE 802.11a, 802.11b/g, and 802.11n, Wi-Fi based*.
Transfer rate	(Automatic switching) IEEE802.11 a and g: 54 Mbps max. data rate; IEEE802.11n: 300 Mbps max. data rate
Active frequency	• 802.11n: 2.4 GHz or 5 GHz • 802.11b/g: 2400~2473 MHz • 802.11a: 4900 ~ 5850 MHz
Typical operating distances**	• 802.11a: 40 ft. (12 m) @ 54 Mbps; 300 ft. (91 m) @ 6 Mbps • 802.11b: 100 ft. (30 m) @ 11 Mbps; 300 ft. (91 m) @ 1 Mbps • 802.11g: 100 ft. (30 m) @ 54 Mbps; 300 ft. (91 m) @ 1 Mbps • 802.11n: Estimated double the operating distance of 802.11g and 802.11a in their respective frequencies.
Number of channels	• 802.11a: 8 independent channels • 802.11b/g: 11 channels, 3 non-overlapping channels • 802.11n: Channel bonding takes two of the non-overlapping 20MHz channels and combines it into one 40MHz channel. It is actually 12 non-overlapping channels with channel bonding and 24 without. Also, it is 1 non-overlapping channel in 2.4GHz when channel bonding is used
Security	Encryption Types - WEP, TKIP, AES***, WPA 1.0 and WPA 2.0 compliant Encryption Key lengths Supported: 64 bits and 128 bits
Maximum recommended number of computers to be connected over wireless LAN (during ad hoc connection)	10 units or less ****

* “Wi-Fi based” indicates that the interconnectivity test of the organization which guarantees the interconnectivity of wireless LAN (Wi-Fi Alliance) has been passed.

** The communication ranges shown above will increase or decrease depending on factors such as number of walls, reflective material, or interference from external RF sources.

*** Encryption with network key (WEP) is performed using the above number of bits, however, users can set 40 bits/ 104 bits after subtracting the fixed length of 24 bits.

**** Depending on practical environments, the allowable number of computers to be connected may be decreased.

Port replicator (optional)

Electrical data	
Safety regulations complied with	CE
Protection class	II
Ports	
Monitor port (analog)	15-pin
Monitor port (digital)	25-pin, DVI-D
DisplayPort	1 x
LAN port	RJ45
USB (Universal Serial Bus)	4x USB 3.0
Audio	Headphones port
Docking port	100-pin
Security Lock	1 x
Ambient conditions	
Environment class DIN IEC 721	7K1
Mechanism class DIN IEC 721	7M2
Operating temperature	5°C .... 35°C / 41°F .... 95°F
Transit temperature	–15°C .... 60°C / 5°F .... 140°F

Rechargeable battery

i

For information on the batteries used in your device, please see "http://solutions.us.fujitsu.com/www/content/support/contact/index.php".

Rated voltage	14.4 V
Rated capacity	45 Wh
Rated power	3150 mAh

i

The operating time depends on the device configuration, the active applications and the energy saving settings.

AC adapter for use with notebook and port replicator

The following technical data applies to the AC adapter included in the scope of delivery of the notebook and the optionally available port replicator.

Primary	
Rated voltage	100 V to 240 V (automatic)
Rated frequency	50 Hz to 60 Hz (automatic)
Max. rated current	0.7 A to 1.2 A
Secondary	
Rated power	100 W
Rated voltage	19 V
Max. rated current	5.27 A

An additional AC adapter or AC cable can be ordered at any time.

Manufacturer’s notes

Disposal and recycling

You can find information on this subject on your notebook or on our website ("http://solutions.us.fujitsu.com/www/content/products/trade-in_program/").

Recycling your battery

Over time, the batteries that run your mobile computer will begin to hold a charge for a shorter amount of time; this is a natural occurrence for all batteries. When this occurs, you may want to replace the battery with a fresh one*. If you replace it, it is important that you dispose of the old battery properly because batteries contain materials that could cause environmental damage if disposed of improperly.

Fujitsu is very concerned with environmental protection, and has enlisted the services of the Rechargeable Battery Recycling Corporation (RBRC)**, a nonprofit public service organization dedicated to protecting our environment by recycling old batteries at no cost to you.

RBRC has drop-off points at tens of thousands of locations throughout the United States and Canada. To find the location nearest you, go to "www.RBRC.org" or call 1-800-822-8837.

If there are no convenient RBRC locations near you, you can also go to the EIA Consumer Education Initiative website "http://EIAE.org/ " and search for a convenient disposal location.

i

Remember – protecting the environment is a cooperative effort, and we must make every effort to protect it for current and future generations.

* To order a new battery for your Fujitsu mobile computer, go to the Fujitsu shopping site at "www.shopfujitsu.com" in the US or "www.fujitsu.ca/products/notebooks" in Canada.

** RBRC is an independent third party to which Fujitsu provides funding for battery recycling; RBRC is in no way affiliated with Fujitsu.

DOC (Industry CANADA) Notices

Radios and Television

This Class B digital apparatus meets all requirements of Canadian Interference-Causing Equipment Regulations.

CET appareil numérique de la class B respecte toutes les exigence du Réglement sur le matérial brouilleur du Canada.

UL Notice

IMPORTANT SAFETY INSTRUCTIONS

This unit requires an AC adapter to operate. Only use UL Listed I.T.E. adapters with an output rating of 19 VDC, with a minimum current of 3.16A (60W). The correct output rating is indicated on the AC adapter label. Refer to the illustration below for the correct AC Adapter output polarity:

When using your notebook equipment, basic safety precautions should always be followed to reduce the risk of fire, electric shock and injury to persons, including the following:

- Do not use this product near water for example, near a bathtub, washbowl, kitchen sink or laundry tub, in a wet basement or near a swimming pool.
- Use only the power cord and batteries indicated in this manual. Do not dispose of batteries in a fire. They may explode. Check with local codes for possible special disposal instructions.

SAVE THESE INSTRUCTIONS

For Authorized Repair Technicians Only

CAUTION:

For continued protection against risk of fire, replace only with the same type and rating fuse.

WARNING:

Danger of explosion if Lithium (CMOS) battery is incorrectly replaced. Replace only with the same or equivalent type recommended by the manufacturer.

Dispose of used batteries according to the manufacturer's instruction.

ENERGY STAR Compliance

Your Fujitsu system is an ENERGY STAR qualified mobile PC. By choosing a computer with the latest energy-saving technology, you're helping to preserve our environment for future generations. ENERGY STAR is a joint program of the U.S. Environmental Protection Agency, U.S. Department of Energy, Natural Resources Canada, and other governments around the world helping us save money while protecting the environment through energy efficient products and practices. With energy costs and global warming top-of-mind for consumers, Fujitsu is committed to offering solutions that help consumers conserve energy and improve the quality of our environment.

Sleep Mode:

You will notice that your computer is initially set so that the display turns off after 15 minutes of user inactivity, and the computer goes into Sleep mode after 20 minutes of user inactivity. When going into Sleep mode, the computer also reduces the speed of any active Ethernet network links. To "wake" the computer from Sleep mode, press the Suspend/Resume Button.

Energy saving benefits:

Fujitsu ENERGY STAR qualified mobile PCs use about half as much electricity as standard equipment – saving half in utility costs. But more than that, ENERGY STAR also makes a difference for the environment. Did you know that the average house can be responsible for twice the greenhouse gas emissions as the average car? That's because every time you flip on a light switch, run your dishwasher, or turn on your PC, you use energy, which means more greenhouse gas emissions from power plants. So the more energy we can save through energy efficiency, the more we help to reduce greenhouse gases and the risks of global warming.

To learn more about the important ENERGY STAR program, visit:"www.energystar.gov".

To read about how Fujitsu is supporting Sustainable Management along with several other environmental activities, visit the Fujitsu Corporate Citizenship page at: "http://www.computers.us.fujitsu.com/www/content/aboutus/environmental/environment.php".

Declarations of Conformity

This device complies with Part 15 of the FCC rules. Operations are subject to the following two conditions: (1) This device may not cause harmful interference, (2) This device must accept any interference received, including interference that may cause undesired operation.

FCC and IC Regulatory Information

Please note the following regulatory information related to the wireless LAN device.

Regulatory Notes and Statements

Wireless LAN, Health and Authorization for use

Radio frequency electromagnetic energy is emitted from Wireless LAN devices. The energy levels of these emissions, however, are far much less than the electromagnetic energy emissions from wireless devices such as mobile phones. Wireless LAN devices are safe for use by consumers because they operate within the guidelines found in radio frequency safety standards and recommendations. The use of Wireless LAN devices may be restricted in some situations or environments, such as:

- On board an airplane, or
- In an explosive environment, or
- In situations where the interference risk to other devices or services is perceived or identified as harmful.

In cases in which the policy regarding use of Wireless LAN devices in specific environments is not clear (e.g., airports, hospitals, chemical/oil/gas industrial plants, private buildings), obtain authorization to use these devices prior to operating the equipment.

Regulatory Information/Disclaimers

Installation and use of this Wireless LAN device must be in strict accordance with the instructions included in the user documentation provided with the product. Any changes or modifications made to this device that are not expressly approved by the manufacturer may void the user’s authority to operate the equipment. The manufacturer is not responsible for any radio or television interference caused by unauthorized modification of this device, or the substitution or attachment of connecting cables and equipment other than those specified by the manufacturer. It is the responsibility of the user to correct any interference caused by such unauthorized modification, substitution or attachment. The manufacturer and its authorized resellers or distributors will assume no liability for any damage or violation of government regulations arising from failure to comply with these guidelines.

This device must not be co-located or operated in conjunction with any other antenna or transmitter.

For IEEE 802.11a Wireless LAN: For operation within 5.15~5.25 GHz frequency range, it is restricted to indoor environments, and the antenna of this device must be integral.

Federal Communications Commission and Industry Canada statement:

This device complies with Part 15 of FCC Rules and Industry Canada license exempt RSS standard(s).

Operation is subject to the following two conditions: (1) This device may not cause interference, and, (2) This device must accept any interference, including interference that may cause undesired operation of this device.

Déclaration d’Industrie Canada

Cet appareil est conforme à la Section 15 des Règles de la FC C et à la (aux) norme(s) RSS concernant les appareils exempt s de licence par Industrie Canada. Son fonctionnement est soumis aux deux condition s suivantes : (1) cet appareil ne doit pas causer d’interférence nuisib le; (2) cet appareil doit accepter toutes les interférences reçues, y compris celles pouvan t causer un mauvais fonctionnement de l’appareil.

FCC Interference Statement

This equipment has been tested and found to comply with the limits for a Class B digital device, pursuant to Part 15 of the FCC Rules. These limits are designed to provide reasonable protection against harmful interference in a residential installation. This equipment generates, uses, and can radiate radio frequency energy. If not installed and used in accordance with the instructions, it may cause harmful interference to radio communications. However, there is no guarantee that interference will not occur in a particular installation.

If this equipment does cause harmful interference to radio or television reception, which can be determined by turning the equipment off and on, the user is encouraged to try and correct the interference by one or more of the following measures:

1. Reorient or relocate the receiving antenna.
2. Increase the distance between the equipment and the receiver.
3. Connect the equipment to an outlet on a circuit different from the one the receiver is connected to.
4. Consult the dealer or an experienced radio/TV technician for help.

FCC Radio Frequency Exposure statement

The available scientific evidence does not show that any health problems are associated with using low power wireless devices. There is no proof, however, that these low power wireless devices are absolutely safe. Low power wireless devices emit low levels of radio frequency energy (RF) in the microwave range while being used. Whereas high levels of RF can produce health effects (by heating tissue), exposure to low-level RF that does not produce heating effects causes no known adverse health effects. Many studies of low-level RF exposure have not found any biological effects. Some studies have suggested that some biological effects might occur, but such findings have not been confirmed by additional research.

The wireless LAN radio device has been tested and found to comply with FCC radiation exposure limits set forth for an uncontrolled equipment and meets the FCC radio frequency (RF) Exposure Guidelines in Supplement C to OET65.

The exposure standard for wireless devices employs a unit of measurement known as the Specific Absorption Rate, or SAR. The SAR limit set by the FCC is 1.6W/kg, and 1.6W/kg by Industry Canada.

This device is compliant with SAR for general population /uncontrolled exposure limits in ANSI/IEEE C95.1-1992 and Canada RSS 102, and had been tested in accordance with the measurement methods and procedures specified in OET Bulletin 65 Supplement C, and Canada RSS 102. This device has been tested, and meets the FCC, IC RF exposure guidelines when tested with the device operating conditions.

Déclaration de la FCC/d’Industrie Canada sur l’exposition aux radiofréquences

La norme régissant l’exposition des appareils sans fil aux radiofréquences emploie une unité de mesure dénommée Taux d’absorption spécifique, ou TAS. La FCC et Industrie Canada ont défini la même limite de TAS : 1,6 W/kg. Cet appareil est conforme au TAS pour les limites d’exposition générales de la population/non contrôlées définies par les règles C95.1-1992 de l’ANSI/IEEE et RSS 102 d’Industrie Canada ; il a été testé en conformité avec les méthodes et procédures de mesure spécifiées dans le supplément C du bulletin 65 de l’OET (Office d’ingénierie et de technologie) et la règle RSS 102 d’Industrie Canada. Cet appareil a été testé selon les directives de la FCC et d’IC concernant l’exposition aux radiofréquences et s’est révélé conforme à ces dernières lorsqu’il a été testé en contact direct avec le corps.

Export restrictions

This product or software contains encryption code which may not be exported or transferred from the US or Canada without an approved US Department of Commerce export license. This device complies with Part 15 of FCC Rules., as well as ICES 003 B / NMB 003 B. Operation is subject to the following two conditions: (1) this device may not cause harmful interference, and (2) this device must accept any interference received, including interference that may cause undesirable operation. Modifications not expressly authorized by Fujitsu America, Inc. may invalidate the user’s right to operate this equipment.

Canadian Notice

The device for the 5150 - 5250 MHz band is only for indoor usage to reduce the potential for harmful interference to co-channel mobile satellite systems.

The maximum antenna gain of 6 dBi permitted (for devices in the 5250 - 5350 MHz, 5470 - 5725 MHz and 5725 - 5825 MHz bands) to comply with the e.i.r.p. limit as stated in A9.2 of RSS210.

In addition, users are cautioned to take note that high power radars are allocated as primary users (meaning they have priority) of 5250 - 5350 MHz and 5650 - 5850 MHz and these radars could cause interference and/or damage to LE-LAN devices.

Avis pour le Canada

Le matériel destiné à un usage sur la bande 5 150 - 5 250 MHz doit être utilisé uniquement à l’intérieur afin de réduire les risques de brouillage nuisible causé aux systèmes mobiles par satellite fonctionnant sur un même canal.

Un gain d’antenne de 6 dBi est autorisé (pour le matériel utilisant les bandes 5 250 - 5 350 MHz, 5 470 - 5 725 MHz et 5 725 - 5 825 MHz), conformément à la limite p.i.r.e. maximale permise selon l’annexe A9.2 afférent aux périphériques RSS210.

En outre, les utilisateurs doivent prendre garde au fait que les radars de grande puissance sont considérés comme des utilisateurs principaux (ce qui signifie qu’ils sont prioritaires) des bandes 5 250 - 5 350 MHz et 5 650 - 5 850 MHz et qu’ils pourraient causer des interférences et/ou des dommages aux appareils de réseau exempts de licence.

Appendix

Before Using the Optional Wireless LAN

This manual describes the procedures required to properly set up and configure the optional integrated Wireless LAN Mini-PCI device (referred to as "WLAN device" in the rest of the manual). Before using the WLAN device, read this manual carefully to ensure its correct operation. Keep this manual in a safe place for future reference.

Wireless LAN Devices Covered by this Document

This document is applicable to systems containing the following device:

- Intel® Dual Band Wireless-N 7260

Characteristics of the WLAN Device

- The WLAN devices are PCI Express Mini cards attached to the main board of the mobile computer.
- The WLAN devices operate in license-free RF bands, eliminating the need to procure an FCC operating license. The WLAN operates in the 2.4GHz Industrial, Scientific, and Medical (ISM) RF band and the lower, middle, and upper bands of the 5GHz Unlicensed National Information Infrastructure (UNII) bands.
- The WLAN devices are capable of four operating modes, IEEE802.11a, IEEE802.11b, IEEE802.11g, and IEEE802.11n.
- The WLAN device is Wi-Fi certified and operates (as applicable) at the maximum data rate of 450 Mbps in IEEE802.11n mode (300 Mbps in this configuration); 54 Mbps in IEEE802.11g mode; and 11 Mbps in IEEE802.11b mode.
- The WLAN devices support the following encryption methods - WEP, TKIP, CKIP, and AES encryption.
- The Wireless LAN devices are compliant with the following standards: WPA, WPA2, CCX1.0, CCX2.0, CCX3.0, and CCX4.0.

Wireless LAN Modes Using this Device

Ad Hoc Mode

"Ad Hoc Mode" refers to a wireless network architecture where wireless network connectivity between multiple computers is established without a central wireless network device, typically known as Access Point(s). Connectivity is accomplished using only client devices in a peer-to-peer fashion. That is why Ad Hoc networks are also known as peer-to-peer networks. Ad Hoc networks are an easy and inexpensive method for establishing network connectivity between multiple computers. Ad Hoc mode requires that the SSID, network authentication, and encryption key settings are identically configured on all computers in the Ad Hoc network.

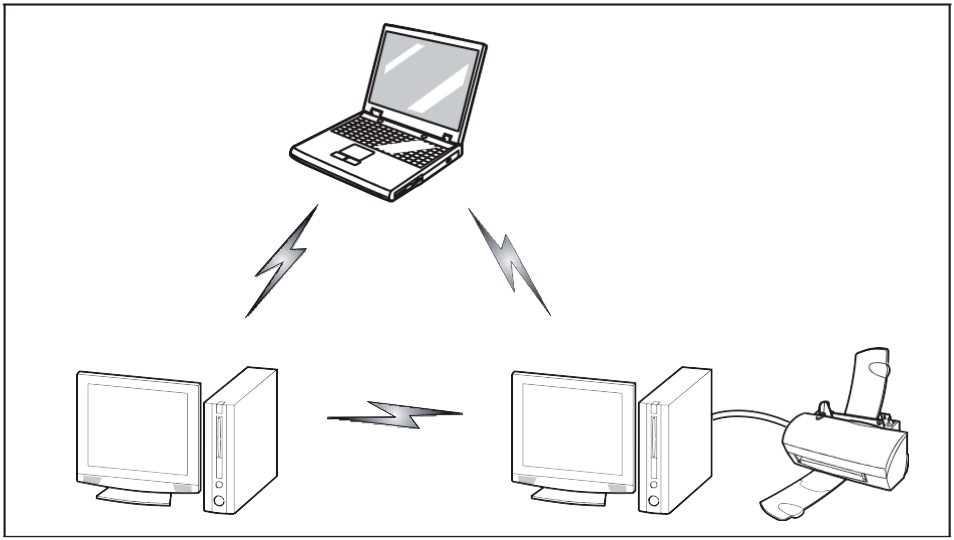

Access Point (Infrastructure) Mode

Infrastructure mode refers to a wireless network architecture in which devices communicate with wireless or wired network devices by communicating through an Access Point. In infrastructure mode, wireless devices can communicate with each other or with a wired network. Corporate wireless networks operate in infrastructure mode because they require access to the WLAN in order to access services, devices, and computers (e.g., file servers, printers, databases).

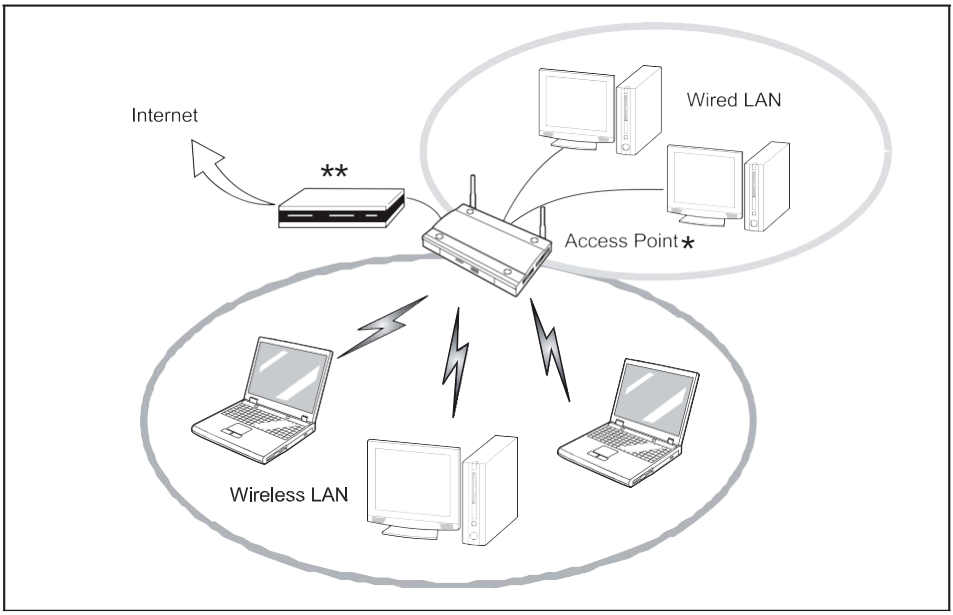

* = An optional hub for a wired LAN may be required depending upon the type of access point used.

** = ADSL modem, cable modem, or similar

How to Handle This Device

The WLAN device is an optional device that may come pre-installed in your mobile computer. Under normal circumstances, it should not be necessary for you to remove or re-install it. The Operating System that your mobile computer comes with has been pre-configured to support the WLAN device.

- Integrated Intel Centrino wireless LAN devices support IEEE802.11a, IEEE802.11b, IEEE802.11g, and IEEE802.11n.
- The WLAN device operates in the 2.4 GHz ISM band and the 5 GHz lower, middle, and upper UNII bands.
- Microwave ovens may interfere with the operation of WLAN devices since they operate in the same 2.4 GHz frequency range as IEEE802.11b/g/n devices. Interference by microwaves does not occur with IEEE802.11a radio which operates in the 5 GHz RF band.
- Wireless devices that transmit in the 2.4 GHz range may interfere with operation of WLAN devices in IEEE802.11b/g/n modes. Symptoms of interference include reduced throughput, intermittent disconnects, and many frame errors. It is HIGHLY recommended that these interfering devices be powered off to ensure proper operation of the WLAN device.

Deactivating/Disconnecting the WLAN Device

Disconnecting the WLAN device may be desired in certain circumstances (to extend battery life) or where certain environments require it (i.e. hospitals, clinics, airplanes, etc.). The WLAN device can be disconnected in Windows using the WLAN icon in the system tray (Note that disconnecting via the icon in the system tray does not turn off the radio; it continues to transmit and receive even though it's not connected.)

► Press the key combination [Fn] + [F5] to deactivate the Wireless Device

↳ The wireless component indicator will go off when the wireless components are switched off.

Configuring the Wireless LAN

The optional WLAN device can be configured to establish wireless network connectivity using the software that is built into Windows. Support for most industry standard security solutions is contained in this software.

Pre-defined parameters will be required for this procedure. Please consult with your network administrator for these parameters:

Configuring the WLAN Using Windows

The WLAN device can be configured to establish wireless network connectivity using the software that is built into Windows Vista. Support for most industry standard security solutions is contained in this software.

Pre-defined parameters are required for this procedure. Consult your network administrator for these parameters:

1. From the *Modern Start* screen, press [Windows] + [X] then select *Control Panel* from the menu.
2. If the *Control Panel* is not in *Classic View*, select *Classic View* from the left panel. Double-click the *Network and Sharing Center* icon.
3. Select *Setup a new connection or network*.
4. Depending upon what type of connection you would like to make, make a selection. For an infrastructure network, select *Manually connect to a wireless network*.
5. Enter the required information. It may be necessary to consult with your network administrator for some of the information.
6. In the event you require assistance, go to the *Network and Sharing Center* window (*Control Panel > Network and Sharing Center*), and type in relevant keywords in the *Search* box.

Connection to the network

After you have configured your computer, you can connect to an active network by performing the following steps:

1. Click on the *WLAN* icon in the system tray.
2. Select *Connect to a network*.
3. Select a network from the list that appears, and click the *Connect* button.

Troubleshooting the WLAN

Causes and countermeasures for troubles you may encounter while using your wireless LAN are described in the following table.

Problem	Possible Cause	Possible Solution
Unavailable network connection	Incorrect network name (SSID) or network key	**Ad hoc connection:** verify that the network names (SSID's) and network keys (WEP) of all computers to be connected have been configured correctly. SSID's and WEP key values must be identical on each machine. **Access Point (Infrastructure) connection:** set the network name (SSID) and network key to the same values as those of the access point. Set the Network Authentication value identically to that of the Access Point. Please consult your network administrator for this value, if necessary.
	Weak received signal strength and/or link quality	**Ad hoc connection:** Retry connection after shortening the distance to the destination computer or removing any obstacles for better sight. **Access Point (Infrastructure) connection:** Retry connection after shortening the distance to the access point or removing any obstacles for better sight.

Problem	Possible Cause	Possible Solution
Unavailable network connection (continued)	The WLAN device was deactivated or is disabled	Check if the wireless switch is turned On. Go to *Start > Control Panel*, and doubleclick on *Windows Mobility Center*. If the wireless network is off, click the *Turn wireless on* button.
	The computer to be connected is turned off	Check if the computer to be connected is turned ON.
	Incorrectly configured network settings	Recheck the configuration of your network settings.
	RF interference from Access Points or other wireless networks	The use of identical or overlapping RF channels can cause interference with the operation of the WLAN device. Change the channel of your Access Point to a channel that does not overlap with the interfering device.
	Wireless network authentication has failed	Re-check your Network Authentication, Encryption, and Security settings. Incorrectly configured security settings such as an incorrectly typed WEP key, a mis-configured LEAP username, or an incorrectly chosen authentication method will cause the LAN device to associate but not authenticate to the wireless network.
	Incorrect IP address configuration	This only applies to networks using static IP addresses. Please contact your network administrator for the correct settings.

Using the Bluetooth Device

Bluetooth is integrated into the Wireless LAN module. The Bluetooth capabilities are Bluetooth Basic, EDR and Bluetooth Low Energy (BT v4.0) operational modes.

What is Bluetooth

Bluetooth technology is designed as a short-range wireless link between mobile devices, such as laptop computers, phones, printers, and cameras. Bluetooth technology is used to create Personal Area Networks (PANs) between devices in short-range of each other.

i

To enable or disable either the wireless LAN or Bluetooth devices individually, perform the following steps:

1. Turn on the WLAN/Bluetooth using the Fn and F5 keys.
2. Go to the *Modern Start* screen and select *Charms* > *Settings* > *Change PC Settings* > *Wireless*.
3. Under *Wireless* > *Wireless Devices*, click on the *Bluetooth* switch to turn it on.

Where to Find Information About Bluetooth

For additional information about Bluetooth Technology, visit the Bluetooth Web site at: "www.bluetooth.com".

FCC Radiation Exposure Statement

This equipment complies with FCC radiation exposure limits set forth for an uncontrolled environment. The Bluetooth antenna is located on the top edge of the LCD screen and is exempt from minimum distance criteria due to its low power.

The transmitters in this device must not be co-located or operated in conjunction with any other antenna or transmitter.

Canadian Notice

To prevent radio interference to the licensed service, this device is intended to be operated indoors and away from windows to provide maximum shielding. Equipment (or its transmit antenna) that is installed outdoors is subject to licensing.

Warranty

Users are not authorized to modify this product. Any modifications invalidate the warranty.

This equipment may not be modified, altered, or changed in any way without signed written permission from Fujitsu. Unauthorized modification will void the equipment authorization from the FCC and Industry Canada and the warranty.

Image Backup and Recovery Procedures

Thank you for purchasing a Fujitsu computer. Fujitsu is committed to bringing you the best computing experience with your new system.

It is very important that you create DVD copies of your Recovery Image and Bootable Disk before beginning to use your system. To do so, follow the instructions in the “Creating a Backup of Bootable Disk and Recovery Image” section of this document.

It is also important that you create a copy of the software that is essential for your system to access the internet (hereafter called “essential access software”) to external writable media or an external drive. To do so, follow the instructions in the “Creating a Backup of the System-Specific Software Drivers”.

Creating a Backup of Bootable Disk and Recovery Image

When you purchased your new system, a copy of the recovery image was loaded into a hidden partition on your hard disk drive. Having a copy of the recovery image available to you means that in the event of system failure, you will be able to restore it and re-install the essential access software using Fujitsu Software Auto Installer.

To make a copy of the recovery image to DVD disks, you will need three or four blank disks to create the copy. After creating the copy, be sure to label the disks and keep them in a safe place to ensure they do not get damaged.

i

Note: If your system does not have an internal writable DVD drive, connect your system to an external drive* before beginning the following steps.

1. Launch *System Restore and Recovery* from the desktop icon. It will allow you to create the Bootable Disk and the Recovery Image Disk Set.
2. On “Step 1: Select the Bootable Disk from the list”:
   a. Select a media type.
   b. Notice the number of disks that are needed for the set.
   c. Click *Next* to proceed.
3. On “Step 2: Confirm your Recovery Disk”, click *Next*.
4. On “Step 3:” follow the on-screen instructions to make the disk or disk set, then click *Start*. It takes approximately 20 minutes to make one disk.
5. On “Step 4”, when the disk creation is completed, a message appears. Click *Finish* to exit the program.
6. Repeat Step 1: Select *Recovery Disk* from the list and repeat the above steps 2(a), 2(b), 2(c), 3, 4 and 5.

* DEPENDING UPON YOUR OPTICAL DRIVE AND MEDIA FORMAT USED, SOME MEDIA TYPES MAY BE INCOMPATIBLE FOR CREATING IMAGE BACKUPS.

Creating a Backup of Essential Access Software

When you purchased your new system, a “Fujitsu Software Extractor” shortcut was loaded to “C:\Fujitsu\Drivers\AutoInstaller\”. This shortcut allows you to save the software driver packages along with the extracted Auto Installer software package to a selected location. It is recommended that you save these packages to writable media or an external drive. This ensures that in the event of system failure you will be able to re-install the essential access software.

1. Open the C:\Fujitsu\Drivers\AutoInstaller\ folder
2. Run “Fujitsu Software Extractor” as an Administrator
   a. Right-click on Fujitsu Software Extractor.
   b. Select the “Run as Administrator” option from the menu that is displayed.
3. The default save location is C:\Fujitsu\ AutoInstaller\ Drivers\. You can change the location by clicking on the *Browse* button and selecting your preferred location.

   Note: It is recommended that you change the default location and save the software packages to the external writable media or drive.
4. Click on the *Save Packages* button.
5. Fujitsu Software Extractor copies the zipped software packages and Readme files, and extracts the Auto Installer folder to the selected location.

i

Note: The extracted Auto Installer will later be used to install the software automatically on the system in the event of generic image restoration when the software is not pre-installed in the image.

RECOVER YOUR SYSTEM WHEN THE HARD DRIVE IS STILL ACCESSIBLE

Using the Recovery and Utility Tools

The Recovery and Utility tools consist of a variety of tools that will help you recover your recovery image and system images, and delete the data from your hard disk.

Methods for accessing the utilities

Recovery and Utility Tools are preinstalled in a hidden partition by the factory, or they can be accessed by using the bootable disk.

i

Note: The Recovery and Utility tools may be deleted from your hard disk drive if you modify the partitions. If that occurs, you will not be able to use the hidden partition for booting to Recovery and Utility Tools, but you will still be able to boot from the Bootable Disk.

Determining whether Recovery and Utility is pre-loaded

1. Turn on or reboot your system. When the Fujitsu logo appears, press the F12 key.
2. Use the Tab key to get to the Application Menu.
3. Check whether the Recovery and Utility option is present. If it is not present, it means that the utility must be used from the Bootable Disk. Proceed to “Running Recovery and Utility from the Bootable Disk” if Recovery and Utility is unavailable.

Running Recovery and Utility from hard disk

1. Turn on or reboot your system. When the Fujitsu logo appears, press the F12 key.
2. Use the Tab key to get to the Application Menu.
3. Cursor down to *Recovery and Utility* and press the Enter key.
4. Choose your language, if necessary. Select *Recovery and Utility* to proceed.
5. Three tool options appear: *Diagnostics*, *Recovery*, and *Utility* (refer to the Recovery and Utility tools section below for instructions on how to use these tools).
6. If this was successful please skip the next step and go to “Recovery and Utility tools.”
7. If this was NOT successful, please go to the next step.

Running Recovery and Utility from the Bootable disk

To verify/change the boot-up priority (rather than booting-up from the hard drive or an external media drive), perform the following steps:

1. Power on your system. When the Fujitsu logo appears on the screen, press the F12 key.
2. Insert the bootable disk into the drive tray.
3. Highlight the CD/DVD option from the Boot menu, then press Enter .
4. Click *OK*.
5. Select CD/DVD boot mode: UEFI Mode, if applicable, and then press Enter . While the files are being loaded from the disk, the Fujitsu logo screen will appear followed by a progress bar at the bottom of the screen.

Recovery and Utility tools

Note: Recovery and Utility tools may not be available on your system depending on the region from which the system was shipped.

Diagnostics tool: The Diagnostics tool is designed for use by IT professionals. It is not likely you will need to use this tool. If you should need to use this tool, perform the following steps:

1. Press the *Diagnostics Tool* button to start the Diagnostics tool.
2. Read the note, and then click *OK*.
3. Choose one or more of the following options for diagnostics on the Fujitsu Hardware Diagnostics Tool window: CPU, Memory, Display, Hard Disk, CD/DVD/BD, Floppy Disk, Keyboard, and Mouse.
4. Click the *Option* button in the Tool menu to specify how many times the tool should run diagnostics on each selected component.
5. Press *Execute* to start the Diagnostics tool.
6. After the execution is completed, the selected components are circled in red to indicate that they have been diagnosed and the result dialog window opens. Click *Close* to close the window.
7. Click *End* to close the Diagnostics tool, and then click *Yes* to confirm the end of diagnostics session.

Recovery tool: The Recovery tool contains two options:

- Restore C Drive: Restore recovery image (only C: drive)
- Restore Full Hard Drive: Restore recovery image (full hard drive).

You can use these tools to restore the Recovery Image from the hidden partition, and perform a full hard drive recovery. Please refer to instructions above for details on how to create a Recovery Image.

Restore the Recovery Image from Hidden Partition

1. Click [Restore C: drive] from Recovery and Utility tools
2. The progress bar is followed by “Restore Recovery image (only C: drive)” screen confirming that the Image will be restored to the C: drive. Click *Next*.
3. Read the instruction screen and select *Agree*, then click *Next*.
4. Click *OK* to acknowledge the warning message to restore recovery image to the C: drive.
5. When the progress bar appears, wait for the process to complete.
6. Click *Finish* when the process completes; the computer will restart to Windows.
7. Follow the steps listed in the “Auto Installation support for software packages from hidden partition” section.
8. Download FSDM (Fujitsu Software Download Manager) from the support site and download all the software applicable to the model and OS using FSDM.
9. Follow the steps listed in “Auto Installation support for software packages downloaded from support website” section.

RECOVER YOUR SYSTEM WHEN THE HARD DRIVE IS NOT BOOTABLE

Restore the Recovery Image for Full Hard Drive

Follow the steps in the “Recovering your Recovery Image using Recovery and Utility (for new hard drive or non-bootable hard drive)” section. You will need the Bootable Disk and the Recovery Disk Set for this task.

Utility tool: If applicable for your region, the Utility tool contains two options: Hard Disk Data Delete and Partition Creation.

The Hard Disk Data Delete utility is used to delete all data on the hard disk and prevent the data from being reused.

NOTE: Do not use the Hard Disk Data Delete utility unless you are absolutely certain that you want to erase your entire hard disk, including all partitions.

To delete hard disk data:

1. Click the *Hard Disk Data Delete* button. The progress bar appears, followed by the EULA screen.
2. Agree to the EULA and click *Next*.
3. Choose the hard disk from which the data should be deleted in the list of hard disks and click *Next*.

The Partition Creation utility is used to change the C: and D: drive partition sizes.

To run this utility: (This is not an option when using Windows 7.)

1. Click the *Partition Creation* button.
2. A progress bar appears, followed by the EULA screen. Agree to the EULA.
3. On the *Recovery Tool - Partition Creation* screen, move the slider to set disk size, and then click *OK*.
4. Click *Yes* in the *Partition Creation* confirmation dialog.

WARNING: It is highly recommended that you send your product to Fujitsu Service to replace a hard drive. A mistake could possibly destroy your computer, your new hard drive or both.

Recovering Your Recovery Image Using Recovery and Utility (for new hard drive or non-bootable hard drive)

If you have installed a new hard drive or your hard drive is not bootable, perform the following steps.

Note: You will need the Bootable disk and Recovery Image disk set for this recovery.

1. Power on your system. When the Fujitsu logo appears on the screen, press the Enter key.
2. Insert the bootable disk in your DVD drive, then click *OK*.
3. Highlight the CD/DVD option from the Boot Menu and press Enter .
4. Select CD/DVD boot mode: Select UEFI Mode, if applicable and press Enter . While the files are being loaded from the disk, the Fujitsu logo screen appears followed by a progress bar at the bottom of the screen.
5. Choose your language, if necessary.
6. Three tool options appear: *Diagnostics*, *Recovery* and *Utility*. Select *Recovery*.
   - For Windows 8.1: Select *Restore full hard drive*
   - For Windows 7: Select *Restoring the Factory Image (full hard drive recovery)*
7. Click *Next* to confirm full hard drive restoration. All data on HDD will be deleted.
8. Agree to EULA by selecting *Agree* option and clicking *Next*.
9. Click *Next* on the Recovery Disk Check screen to verify that the bootable disk has been inserted into the optical drive.
10. The *Checking for Recovery Disk* screen appears followed by the prompt to insert the first disk. Click *OK* to continue. Repeat this step for all disks. After all recovery disks have been checked and the check has been completed, click *Next*.
11. Follow the prompt to reinsert the first recovery disk and click *Next*.
12. Click *OK* when you receive the final warning informing you that all data on drive C will be lost. This starts the recovery process.
13. Follow the prompts to insert the next recovery disks and click *OK*.
14. After the copying of the image to the HDD completes the restore process is complete, click *Finish* to restart the system. The computer will restart automatically and then go through the first boot process.
15. Follow the steps listed in “Auto Installation support for essential access software from backup location” section.
16. Download FSDM (Fujitsu Software Download Manager) from support site and download all the software applicable to the model and OS using FSDM.
17. Follow the steps listed in “Auto Installation support for essential access software downloaded from support website.

Installing the Software after the Recovery Image is Restored

Auto-installation support for essential access software from hidden partition

The below listed steps are applicable only in cases in which the recovery image restore and hidden partition contents have not been wiped out.

1. After the recovery image is restored, launch the desktop icon “Fujitsu Software Auto Installer”.
2. Double-click on “Fujitsu Software Auto Installer” desktop icon.
3. Click *Yes* on User Account Control Dialog box. This will take some time to process the software packages. A message will be displayed during this time, “Please wait while the content is being processed”.
4. If EULA is displayed for Fujitsu Software Auto Installer, accept the EULA, otherwise continue.
5. Then Fujitsu Software Auto Installer user interface will be launched providing ability to auto-install the essential access software on the system.
6. It is recommended that you install all the software in the listed order. You can *Select All*, to install the software in the order listed.
7. Click *Install* to start the installation.
8. After installing all the selected drivers, Installation Results window will be displayed. Click *OK*.
9. “You must restart the system for the settings to take effect. Do you wish to reboot now?” message appears. Select *Yes*.
10. The system will now reboot.
11. You can now connect to the internet and download FSDM (Fujitsu Software Download Manager) from the support site and download all the software applicable to the model and OS using FSDM if they are not downloaded yet.

Auto-installation support for essential access software from backup location

The below listed steps are applicable in cases in which a backup copy was created as mentioned in the section “Creating a Backup of essential access software”.

1. It is important to have the extracted Auto installer software package folder and Readme file in the same location as other software folders. Otherwise auto-installation of the software will not be supported.
2. Inside the Auto Installer software package, launch FjAutoinstall.exe as an Administrator.
3. Click *Yes* on the User Account Control dialog box. This will take some time to process the software packages. A message will be displayed during this time stating, “Please wait while the content is being processed”.
4. If EULA is displayed for Fujitsu Software Auto Installer, accept the EULA, otherwise continue.
5. The Fujitsu Software Auto Installer user interface will be launched providing ability to auto install the essential access software on the system.
6. It is recommended that you install all the software in the listed order. You can “Select All”, to install the software in the order listed.
7. Click the *Install* button to start the installation.
8. After installing all the selected drivers, *Installation Results* window is be displayed. Click *OK*.
9. “You must restart the system for the settings to take effect. Do you wish to reboot now?” message appears. Select *Yes*.
10. The system will now reboot.

Auto Installation support for the software downloaded from support website

1. Download FSDM (Fujitsu Software Download Manager) from the support site and download all the drivers applicable to the model and OS using FSDM if they are not downloaded yet.
2. When the software packages are downloaded from web, it is important to download the Auto Installer Software package and the model/language- specific Readme file if you prefer to auto install the software.
3. It is important to have the extracted Auto Installer software package folder and Readme file in the same location as other software folders. Otherwise auto-installation of the software will not be supported.
4. Inside the Auto Installer software package, launch FjAutoinstall.exe as administrator.
5. Click *Yes* on the User Account Control dialog box. This will take some time to process the software packages. A message will be displayed during this time stating “Please wait while the content is being processed”.
6. If EULA is displayed for Fujitsu Software Auto Installer, accept the EULA, otherwise continue.
7. The Fujitsu Software Auto Installer user interface will be launched providing the ability to auto install the software downloaded from support site.
8. It is recommended that you install all the software in the listed order. You can *Select All*, to install the software in the order listed.
9. Click the *Install* button to start the installation.
10. After installing all the selected drivers, the Installation Results window is displayed. Click *OK*.
11. “You must restart the system for the settings to take effect. Do you wish to reboot now?” message appears. Select *Yes*.
12. The system will now reboot.

Downloading Driver Updates

To ensure that you always have the most current driver updates related to your system, occasionally access the Fujitsu Software Download Manager (FSDM) utility. The FSDM utility is available from the Fujitsu Support site. FSDM will allow you to view and download a list of the most current drivers, utilities, and applications to determine whether you have the latest versions. To download the FSDM Utility, go to the Support Site: "http://support.fujitsupc.com/CS/Portal/support.do?srch=DOWNLOADS".

If you are planning on downgrading, upgrading or changing versions of your operating system during this process please see the User's Guide for more information at "http://solutions.us.fujitsu.com".

Index

A
A beep sounds every second 82
AC adapter
    connecting 18
    Set up 18
Acoustic warnings 87
Activate
    keyboard backlight 44
Alt+Tab 45
Anti-theft protection 65
Audio connections 77

B
Back tab 45
Backspace 42
Backspace key 42
Battery 48
    battery charge 52
    Caring for and maintaining 48
    charge level 48
    Charging 48
    Discharges too quickly 86
    see Rechargeable battery 48
    Self-discharge 48
    Service life 48
    Storing 48
battery charge meter 48
BIOS Setup Utility
    , protecting with password 66
    calling 79
    exiting 80
    operation 79
    Settings 79
Blank LCD screen 82
Bluetooth
    switching module off 55, 104
    switching module on 55, 104
Bluetooth, Safety notes 13

C
Caps Lock 42
Caps Lock key 42
Charge capacity, battery 48
Charging back-up battery 82
Choose a location 18
Clickpad 39, 44
    buttons 39
    Deactivating 44
    Dragging items 40
    Executing commands 39
    Moving the pointer 39
    Selecting an item 39
Clickpad buttons 44
Components
    Installing/Removing 78
Configuration, BIOS Setup Utility 79
Configuring hardware 79
Configuring system 79
Connecting audio devices 77
Connecting headphones 77
Ctrl+Alt+Del 45
Cursor control 42
Cursor keys 42

D
Date not correct 82
Deactivate
    keyboard backlight 44
Declaration of conformity 97
Devices,
    connecting 72
    disconnecting 72
Display orientation
    select 27
DOC (INDUSTRY CANADA) NOTICES 95

E
Ending
    energy saving mode 85
Energy
    Energy consumption 52
    Energy saving 13
    Energy saving functions 52
Enter 42
Enter key 42
Error messages on the screen 88
Errors
    Acoustic warnings 87
    Screen messages 88
Ethernet LAN 57

F
Factory Image 81
Fault
    correction 81
Fingerprint sensor 65
    configuring 65
First-time setup 17
Fn key 42

Fn+F10 45
Fn+F2 44
Fn+F3 44
Fn+F4 44
Fn+F5 44
Fn+F6 44
Fn+F7 44
Fn+F8 44
Fn+F9 45

G
Getting started 17

H
Hard disk:
    restoring the contents 81
HDMI port 73

I
Important notes 12
In case of service 78
Incorrect time 82
Information,
    safety 12

K
Kensington Lock Cable 65
Key combinations 44
Keyboard 41
keys 41

L
Landscape format
    display 27
LCD screen
    Decrease brightness 44
    difficult to read 83
    Notes 31
    reflected glare 83
    Remains blank 82
Line feed 42

M
Making ready to use 18
Mechanical security 65
Memory card
    handling 53
    inserting 53
    removing 53
Microphone 54
Mobile operation 14
Monitor
    connection 74
    no image 83
    remains blank 83
    unstable image 83
Monitor connection
    see VGA socket 74

N
Notebook
    before traveling 14
    does not start 84
    not working 85
    operating 21
    switching off 29
    transporting 14
Notebook: switching on 24
Notes 12
    disposal / recycling 95
    Energy saving 13
    LCD screen 31
    Transport 14
Num Lock
    indicator 43
Number keypad 41
Numeric keypad 41
    see Virtual number keys 43

O
Operating system
    activating system protection 67
    cancel system protection 67
    Protecting with password 67
Operating system, recovering 81
Operation, notebook 21

P
Packaging 17
Password
    changing 67
    entering 66
    removing 67
Password protection 66
    hard disk 68
Pen 35
Peripherals,
    connecting 72
    disconnecting 72
Port replicator
    Ports 58

Portrait format
    display 27
Ports
    Port replicator 58
Power saving 13
Power-on indicator 24
Printer does not print 85

R
Radio components
    Safety notes 13
Rechargeable battery
    see battery 48
Return 42

S
Safety information 12
Screen brightness
    Decrease 44
    Increase 44
Screen connection
    see VGA socket 74
Security functions 63
    SmartCard 69
    SystemLock 69
Self-discharge, battery 48
Service life, battery 48
Set up
    Device 18
Setup
    see BIOS Setup Utility 79
Shift 42
Shift key 42
Shift+Tab 45
Slot
    Memory cards 53
Speaker 54
Status indicators 21
Subwoofer 54
Summer time 82
Supervisor HDD password
    changing 67
Supervisor password
    entering 66
    removing 67
Suspend/Resume button 24
Switch off
    speakers 44
Switch on
    speakers 44
Switching between screen outputs 45
Switching on for the first time 19
Symbols
    Indicators 21
System settings, BIOS Setup Utility 79

T
Tab key 42
The wireless connection to a network
    does not work 85
Time not correct 82
Tips 81
TPM 71
Transport 14
    Damage during transportation 17
Traveling, notebook 14
Troubleshooting 81
Trusted Platform Module 71

U
USB charging function 76
USB ports 75
User HDD password
    changing 67
User password
    entering 66
    removing 67
Using the security lock 65

V
VGA socket 74
Virtual number keys 43
Volume
    increase 45
    reduce 44
Volume control 54

W
Webcam 47
Windows key 42
Winter time 82
Wireless components 44
Wireless LAN
    Safety notes 13
    switching module off 55, 104
    switching module on 55, 104
Wrong date/time 82