Instruction Manual

Head Mounted Display

Wearable Keyboard

DRAFT

DECLARATION OF CONFORMITY

according to FCC Part 15

Responsible Party Name:	Fujitsu America, Inc.
Address:	1250 E. Arques Avenue Sunnyvale, CA 94085
Telephone:	(408) 746-6000
Declares that product:	Base Model Configuration: LIFEBOOK T902 Tablet PC Complies with Part 15 of the FCC Rules.

This device complies with Part 15 of the FCC rules. Operations are subject to the following two conditions: (1) This device may not cause harmful interference, (2) This device must accept any interference received, including interference that may cause undesired operation.

DRAF

Unpacking and checking the device

Unpack all the individual parts. If any of the parts are missing, please notify your local sales representative immediately. Below is the list of included items.

■Head Mounted Display

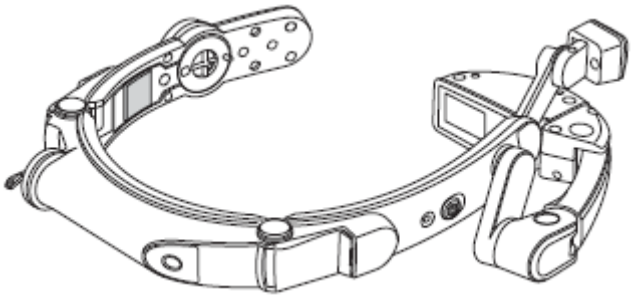

□microUSB cable

□mono earphones

□warranty

□instruction manual (This manual)

□Head Mounted Display main unit
(A strap is attached to the battery cap)

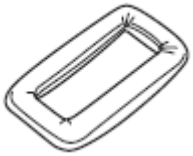

□display cushion x1

□knurled screw x4
(Use a flat blade screwdriver or a coin to turn)

■Fitting belt

These are used when wearing HMD on your head.

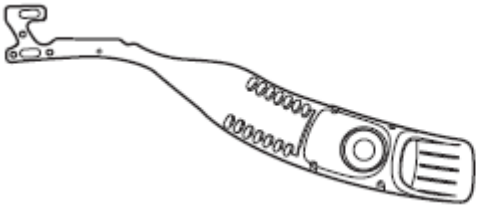

□Left head adjuster

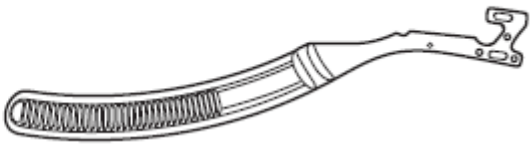

□Right head adjuster

DRAFT

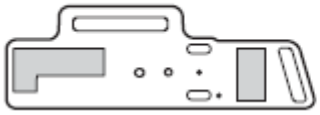

□Left belt attachment

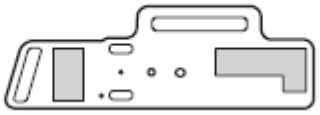

□Right belt attachment

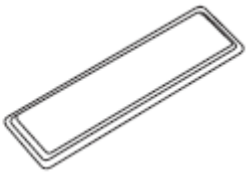

□side cushion x2

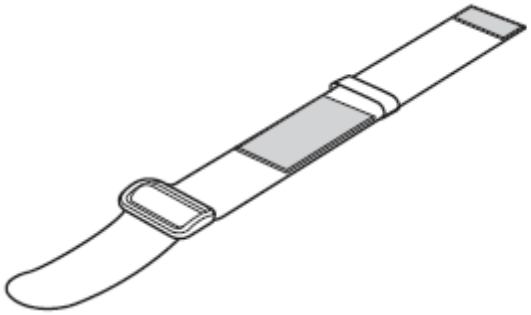

□top band

□front band

■Clip to a helmet

These are used when attaching HMD to a helmet.

□Left helmet clip

□Right helmet clip

■Battery pack

□battery pack x1

■Battery charger

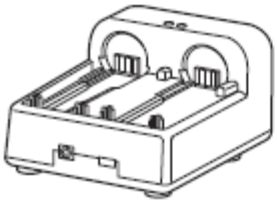

□battery charger x1

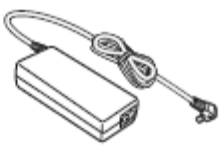

□AC adaptor

□power cable

DRAFT

■Wearable keyboard

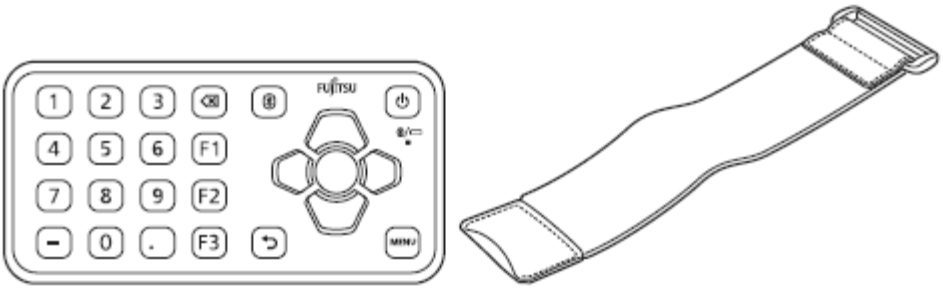

□wearable keyboard □wearable keyboard belt

□AAA alkaline battery x2

Before using this product

About the warranty

- Be sure to fill in the necessary information on the warranty and read its contents. After that, keep it in a safe place.
- Be sure to have the warranty on hand whenever requesting servicing.
- Malfunctions that occur within the warranty period while the product is being used correctly will be repaired without charge.
- Even if malfunction occurs during the warranty period, repair will be subjected to charges in the case the warranty is not presented, if the malfunction is due to natural causes, improper use of the product, etc. Refer to the warranty for details.
- This product and its accessories are subject to change, in part or in their entirety, without notice.

Using the Product in Applications that Require a High Degree of Safety

This product is intended for general use, such as general office use, personal use, household use, and normal industrial use, but it is not designed, manufactured or intended for applications that require a high degree of safety. Do not use this product without first adequately ensuring the level of safety required by the application. An application that requires a high degree of safety is one that is accompanied by a serious direct risk of death or personal injury unless an extremely high degree of safety is ensured, such as those applications noted below.

- Nuclear reaction control, aircraft auto pilot control, air traffic control, mass transport system operation control, medical life support, military weapons system missile launch control, etc.

DRAFT

About the limited-life components

・The battery pack and dry cell batteries are consumable parts, so they need to be replaced on a timely basis in order to maintain performance.　Furthermore, purchasing and replacing batteries must be done by yourself regardless of warranty period.

・The battery pack typically have a lifespan of between 300 and 500 cycles. Battery pack's service life will depend on the environment temperature and usage.

About the terms "power plug" and "power outlet"

The power plug of the AC adapter that comes with the product is a flat-blade 2-pole plug. The manual refers to such a plug as "power plug." Connect the power plug to a power outlet that accepts a flat-blade 2-pole plug (125 V, 15 A). The manual refers to such a power outlet as "outlet."

Product License Agreement

Fujitsu Limited (hereafter Fujitsu) grants you a limited, non-exclusive license to use the software installed on this product (Software) provided that you agree to the "Software Terms of Use" below. By starting to use this Software you are agreeing to be bound by this End-User License Agreement (this Agreement), so be sure to read the "Software Terms of Use" before using this Software. However, note that this Agreement takes priority over any other "Terms of Use," "End-User License Agreement," or other similar documents that are separately appended to any parts of this software.

Software License Agreement

1. License and Copyrights

Fujitsu grants you a limited, non-exclusive license to use this software on this product only. By purchasing this product, you the purchaser are granted the license only for the use of this software, and the rights to this software continue to revert to Fujitsu or third-party developers.

2. Transfer to a Third Party

When transferring the Software (including the manual that comes with this product) to a third party, you shall transfer the software in its entirety along with the product on which the software is installed.

3. Modification

You are not allowed to modify or reverse engineer this software, such as by reverse

DRAFT

compiling, or reverse assembling.

4. Limited Warranty

(1) Fujitsu will not be liable in any way for any damages (including but not restricted to lost profits, work stoppages, loss of business data, or other monetary damages) that result from the use of or the inability to use the software. This also applies even if Fujitsu knew or should have known about the possibility of such damages.

(2) Even if the Software includes software developed by a third party, the third party developer makes no guarantees whatsoever about the software.

5. High degree of safety

This software is intended for general use, such as general office use, personal use, and household use, but it is not designed, manufactured or intended for applications that require a high degree of safety. The user must adequately implement measures to ensure the level of safety required by any such applications to use this software. An application that requires a high level of safety is one that is accompanied by a serious direct risk of death or personal injury unless safety is temporarily and appropriately ensured, such as the following examples that require an extremely high degree of safety.

Nuclear power core control, aircraft control, air traffic control, mass transport system operation control, medical life support, military weapons launch control, etc.

Fujitsu Limited

DRAFT

Wireless LAN(Wi-Fi ®)(support IEEE802.11a/b/g/n)

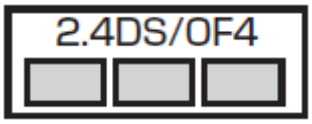

・The product uses the 2.4 GHz band. DS-SS and OFDM are used as the modulation schemes. The interference distance is about 40 m or less.
All bandwidths can be used, and that bands of mobile unit identification devices can be avoided.
・In the frequency band used by Wi-Fi® devices, in addition to home electric appliances such as a microwave oven and industrial/scientific/medical devices, in-plant radio stations for identification of mobile objects used in production lines of a factory (a license is required), specified low power radio stations (a license is not required), or amateur radio stations (a license is required) can be in operation.
1. Before using this device, confirm that in-plant radio stations for identification of mobile objects, specified low power radio stations or amateur radio stations are not in operation in your neighborhood.
2. If this device generates harmful radio wave interference against in-plant radio stations for identification of mobile objects, change the using frequency promptly or stop using wireless LAN function, and contact "General Inquiries" on the last page of this manual, then consult about treatment for prevention of the interference (for example, installation of partitions etc.).
・The Wi-Fi® function of the product conforms to domestic electrical equipment technical standards. Available channels vary by countries. To use Wi-Fi® overseas, check the conditions such as available frequency, regulation, etc. for the country.
・The 2.4 GHz band used by Wi-Fi® device is shared by various other devices. For this reason, the communication speed and connectable range may be decreased, or disconnection may occur, due to interference by other devices.
・To use in airplane, confirm with airline company in advance.

Cautions on using 5GHz band

Wi-Fi® functions of this product use the 5 GHz band. Using the 5.2 GHz band and 5.3 GHz band outside is prohibited by the Radio Law.
- W52 (5.2GHz band/ 36,38,40,42,44,46,48ch)
- W53 (5.3GHz band/ 52,54,56,58,60,62,64ch)
- W56 (5.6GHz band/ 100,102,104,106,108,110,112,116,132,134,136,140ch)

DRAFT

This equipment has been tested and found to comply with the limits for a Class A digital device. These limits are designed to provide reasonable protection against harmful interference in a residential installation. This equipment generates, uses and can radiate radio frequency energy and, if not installed and used in accordance with the instructions, may cause harmful interference to radio communications. However, there is no guarantee that interference will not occur in a particular installation. If this equipment does cause harmful interference to radio or television reception, which can be determined by turning the equipment off and on, the user is encouraged to try to correct the interference. VCCI-A

Using Bluetooth function

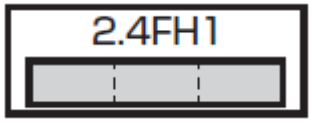

・The product uses the 2.4 GHz band. FH-SS is used as the modulation schemes. The interference distance is about 10 m or less. All bandwidths can be used, and that bands of mobile unit identification devices cannot be avoided.

・In the frequency band used by Bluetooth devices, in addition to home electric appliances such as a microwave oven and industrial/scientific/medical devices, in-plant radio stations for identification of mobile objects used in production lines of a factory (a license is required), specified low power radio stations (a license is not required), or amateur radio stations (a license is required) can be in operation.

1. Before using this device, confirm that in-plant radio stations for identification of mobile objects, specified low power radio stations or amateur radio stations are not in operation in your neighborhood.
2. If this device generates harmful radio wave interference against in-plant radio stations for identification of mobile objects, change the using frequency promptly or stop using Bluetooth function, and contact "General Inquiries" on the last page of this manual, then consult about treatment for prevention of the interference (for example, installation of partitions etc.).

・The Bluetooth function of the product conforms to domestic electrical equipment technical standards. To use Bluetooth overseas, check the conditions such as available frequency, regulation, etc. for the country.

・The 2.4 GHz band used by Bluetooth device is shared by various other devices. For this reason, the communication speed and connectable range may be decreased, or disconnection may occur, due to interference by other devices.

DRAFT

・To use in airplane, confirm with airline company in advance.

About this product

・Display is manufactured by taking advantage of highly advanced technology but some dots may always or never be lit. Note that, this shows characteristics of liquid crystal displays and not defects in the products.

・The date and time settings will be cleared if the battery pack's power level reaches 0%.

Perform the operation below to set the current time and date.

On the HMD home screen: → [Settings] → [other settings] → [Date & Time]

Moreover, when this product is connected to a smartphone by using Miracast, the date and time on this product will be synchronized to the one on the smartphone.

・Fujitsu does not guarantee the compatibility of any commercially available accessories.

・Do not use a remodeled product. Using a remodeled product violates the Radio Law/Telecommunications Business Act. The product is certified according to technical standard conformance of specified wireless equipment based on the Radio Law/Telecommunications Business Act, and as a proof of it, the "Technical Compliance Mark" is depicted on the electronic nameplate of the product.

If you remodel the product by removing its screws, your certification of technical standard conformance becomes invalid.

Do not use the product with its certification of technical standard conformance invalid as it violates the Radio Law/Telecommunications Business Act.

DRAFT

Notational conventions

The meaning of the signs in this manual are described below.

IMPORTANT	Indicates precaution and should not do for use. Please be sure to read the information.
POINT	Indicates information related to operational points. Read when needed.
→	Indicates reference page

Name of items and notations

Name of item	Notation in this manual
Head Mounted Display	product, HMD, terminal, device
Smartphone/Tablet	Smartphone
Wearable keyboard	keyboard
Mono earphone	earphone
microUSB cable, power cable	cable
microUSB connection cap, diopter adjustment cap, microSD card slot cap, battery cap, external audio connection jack cap	cap
Android™	Android
Bluetooth®	Bluetooth

The images or illustration used in this manual

The images or illustration used in this manual are examples. They may differ from the actual image, illustration or file name.
Moreover, cables may be omitted or simplified in the illustration.

Key notation and operation procedures

The key notation in this manual is not the actual key image on the keyboard but description of the key.
For example, [BackSpace] key, [Bluetooth] key, [Power] key, etc.

Notation of continuous operations

Continuous operations in this manual are shown using '→' notation.
For example, to change "Date and Time" by tapping "Settings" in android

DRAFT

home screen is shown below.

Change by tapping “Settings” → ”Date and Time”

Warning and caution labels

There are warning and caution labels on the product. Do not remove or damage them.

Safety Precautions

Before using this product, thoroughly read these safety precautions for proper use. These "Safety Precautions" describe instructions that should be observed to prevent damage to property or injury to the customer or others using the product. These instructions are divided into the following categories.

Explanation of indications used in this manual

DANGER	This symbol indicates the potential and imminent danger of death or serious injury (*1) to a person.
WARNING	This symbol indicates the possibility of death or serious injury (*1) to a person.
CAUTION	This symbol indicates the possibility of personal injury (*2) to a person or physical damage (*3).

※1:Serious injury: This refers to loss of sight, injury, burns (high- and low temperature), electric shock, broken bones, injuries with residual aftereffects from poisoning, etc. and injuries requiring hospital admission for treatment or long-term hospital attendance as an outpatient.

※2: Injury: This refers to injuries, burns (high- and low-temperature), electric shock, etc. that do not require hospital admission for treatment or long-term hospital attendance as an outpatient.

※3: Physical damage: This refers to extended damage to buildings, furniture, livestock, or pets.

The symbols below show specific directions.

	Indicates an action that must be done.
Don't	This symbol denotes that the action is prohibited.
Unplug	This symbol denotes that the equipment should be unplugged.

DRAFT

This symbol denotes that disassembling the phone or its components is not allowed.

Trademarks, Copyrights and portrait rights

Google, Google logo, Android, Android logo and other trademarks are trademarks or registered trademarks of Google Inc.
The Bluetooth® smart ready word mark and logo are registered trademarks owned by the Bluetooth® SIG, Inc., and FUJITSU LIMITED is licensed to use these trademarks.

The microSD logo, microSDHC logo are trademarks of SD-3C and LLC.
Other company and product names mentioned in this manual are trademarks or registered trademarks of their respective holders.
Copyright FUJITSU LIMITED 2015

Precautions

Before using the product, or when necessary, read the precautions below to ensure safe use and handling.
After reading this manual, keep it carefully.

■Common precautions of HMD, keyboard, battery charger, AC adaptor and battery pack

⚠ DANGER

Be sure to use only the specified peripheral devices. Failure to do so may cause overheat ignition, rupture, fault or leakage.

Do not short-circuit the connection terminal, earphone terminal,

DRAFT

charging terminal, etc. Do not allow conductive foreign objects (metal fragments, pencil leads, etc.) to come into the contact with or get inside of these items. Doing so may cause fire or a fault.

Before entering an area where flammable gas is generated, be sure to turn off the product. Do not charge the battery. Failure to do so may cause the gas to catch fire.

Do not puncture the product with a nail, hit it with a hammer or step on it. Doing so may cause ignition, damage or injury.

⚠ WARNING

Do not throw the product into fire, apply heat to the product or short-circuit the product. Doing so might cause ignition, rupture or fire.

Unplug When abnormal symptoms occur such as overheat, smoke, odor or strange noise, please remove the product from your head and turn off the power. Remove the power plug from wall outlet if it is occurring from the battery charger or the AC adaptor. Continue to use the product in such abnormal state may cause fire or electric shock.

Unplug Turn off the product if liquid such as water or a metal fragment gets inside the product. If it is the AC adaptor, remove the power plug from wall outlet. Continue to use the product in this state may cause fire or electric shock.

DRAFT

Unplug Turn off the product when you dropped the product or the cover breaks and request a repair service. Continue to use the product in this state may cause fire or electric shock.

If you hear thunder, do not touch the power plug or connect cables until you are safe. If there is a chance of a lightning strike, take off and turn off the product. If it is the AC adaptor, remove the power plug from wall outlet and disconnect cables. Lightning may cause fire, fault or damage the product as well as electric shock.

Do not allow metal objects or burnable items to get inside any of opening such as slots. Doing so may cause fire or electric shock.

The customer is not allowed to disassemble, modify or repair the product. Doing so may cause a fault, ignition, electric shock or injury.

Do not operate the product while driving a car, motorbike or riding a bicycle. May disturb driving and cause an accident. Park the vehicle in a safe area before using the product.

Do not cover or wrap the product with bedding, place it near the heater or on an electric carpet, etc. while using the product.
Doing so may cause fire because heat is being accumulated within the product.

DRAFT

Do not use other than the AC adaptor included in the product or designated AC adaptor. Do not use the AC adaptor included in the product for other devices. Doing so may cause fire or electric shock.

Do not use a cleaning spray that contains flammable chemicals to clean. Doing so may cause fire or a fault.

Although the product has waterproof property, stop use if liquid such as water gets inside the product from the cap and the battery cover. Continue to use the product in this state may cause overheating, ignition or a fault.

Never change the battery or plug an earphone if the product is wet. Doing so may cause electric shock or short-circuit resulting in a fault or fire.

If the product is damaged because it was dropped or other reason and its internal parts are exposed, do not touch the exposed parts with your hands. Doing so may cause electric shock or injury.

⚠ CAUTION

Do not place heavy objects on the product. Doing so may cause injury or a fault.

DRAFT

Do not use or store the product in places subject to direct sunlight or get extremely hot (e.g. in automobiles), places that get humid. Doing so may cause electric shock, fire, damage or a fault.

Do not leave the product on unstable places such as shaky places or tilting surfaces. Doing so may cause injury or damage if the product is dropped.

Follow the instructions on the manual to dispose the product. Check with local codes for possible special disposal instructions. A Lithium-ion battery is used in the product. The keyboard uses dry cell batteries. Do not dispose of batteries in a fire. They may explode.

■Precautions to HMD

⚠ CAUTION

Do not use the product if the display cushion is damaged and cannot be attached. Doing so may cause injury by fall or collision.

Do not bring the product close to magnetized objects such as cash cards, floppy disks, credit cards and prepaid cards. Doing so may result in loss of recorded information.

DRAFT

If you feel any abnormality with your skin, immediately consult a doctor for a medical treatment.　Itching, rashes, eczema, etc. sometimes occurs if you use the product for a long time or depending on your physical constitution and condition.
See Material List for materials used in the product. (→P.24)

Use the product with the cap and the battery cover closed. If the covers are open, dirt or water may get inside causing a fault.

Do not place the product directly on sand at a beach etc. Sand or other small particles may get inside the earphone, microphone or receiver/speaker, causing the volume to drop. If sand gets inside the product, it may cause overheating or a fault.

■Precautions to earphone

⚠ CAUTION

Adjust the volume moderately when using the earphone.
May cause a hearing loss if the volume is too high.

Permanent hearing loss may occur if earphones or headphones are used at high volume for prolonged period of time.

■Precautions to wireless

⚠ WARNING

DRAFT

Warnings for Wi-Fi® and Bluetooth® technologies. The product should be switched off wherever you are requested to do so in

・hospitals, clinics or health care facilities
  Especially in the operating room for surgery, ICU, CCU, etc
・airplane if it is prohibited to use wireless technologies.
・fire alarms, automatic doors and other automatic control equipment.
・Users wearing implanted pacemakers or defibrillators or other electronic medical equipment

These requests are designed to prevent possible interference with sensitive equipment using low-power signals.

■Precautions of battery pack

The battery pack of the product is a lithium-ion battery. The battery pack is not fully charged at the time of purchase.
Charge the battery pack before using the product.

Li-ion 20

⚠ DANGER

Do not short-circuit the battery pack's plus(+) and minus(-).

Do not carry or store the product with objects like a metal necklace. May cause battery pack to ignite, burst and a fault by short-circuit.

Do not disassemble, remodel or solder.

DRAFT

If the battery pack's fluid contacts eyes, flush the eyes with clean water immediately and see a doctor right away. Do not rub the eyes. May cause loss of sight. The leaking battery pack fluid may ignite, explode or overheat.

Battery pack is not waterproof.

If water or seawater gets on the product, it may cause overheating, ignite, damage, electric shock or a fault. Do not charge if the battery pack is wet.

If the battery pack's fluid contacts the eyes, clothes, etc., flush with clean water immediately. If the battery pack’s fluid contacts the eyes, see a doctor right away. Do not rub the eyes. May cause loss of sight and injuries. If battery pack’s fluid is on the product, wipe it off without touching the fluid directly.

Do not use the battery pack if it was dropped, stepped on, damaged or any liquid leaking from it. Keep the battery pack away from fire if any liquid was leaking or odor coming out from it. Doing so may cause ignition or explosion.

Insert the battery pack to the HMD in correct direction.

Connecting incorrectly might cause explode, ignition or overheat.
Do not force the battery pack into the product. If cannot insert, check the connecting part of the battery and the product.

The battery pack is a consumable item. If the performance of a battery pack does not recover after charge, the battery pack is at the end of

DRAFT

its service life.
Failure to do so may cause overheating, ignition, rupture or leakage. Note that the length of service life varies depending on the usage condition.

Stop charging if charging takes a very long time compare to usual.

Failure to do so may cause overheating, ignition, rupture or leakage.

⚠ WARNING

Follow the instructions on the manual to dispose the product. Check with local codes for possible special disposal instructions. A Lithium-ion battery is used in the product. Do not dispose of batteries in a fire. They may explode.

■Precautions of battery charger, AC adaptor and cables

⚠ WARNING

Do not use at other voltages than the specified power supply voltage.

Doing so might cause fire, overheating or electric shock.

・Battery charger
DC-IN connector: DC12V
MicroUSB connector: DC5V
・AC adapter: AC100V to 240V

Insert the power plug of into the wall outlet all they way. Incomplete insertion of the power plug might result in electric shock or fire caused by overheating and ignition. Do not use when specified charging equipment is damaged, or a power outlet is loose.

Do not overload an electrical circuit. Do not use power outlets or

DRAFT

wiring apparatus beyond its rating. Also, exceeding rating, for example, by connecting multiple devices to a single power strip may result in electric shock, injuries, damage or fire.

Do not short the charging jack while it is connected to the outlet. Do not touch the charging jack with a part of your body such as your hand or finger. May cause an electric shock, short, fire, injury or fault.

Do not touch the battery charger for a long time while power is being supplied from an external source. Doing so may cause a low-temperature burn.

When disconnecting the power plug from the outlet, do not pull the AC adaptor or cord with an excessive force. Pull the AC adaptor or cord horizontally to disconnect.
Failure to do so may cause a fire, burns, injury or electric shock.

When disconnecting the power plug from the outlet, do not pull the cord. Instead, hold the adaptor to disconnect.
Pulling the cord may damage the cord and cause a fire or electric shock.

No wet hands Do not touch the adapter cord or power plug with wet hands.
May cause an electric shock

DRAFT

Do not strain the base of the cable by tightly wrapping the cord around the AC adaptor.
Cable core may be exposed or disconnected.　Doing so may result in an electric shock or fire.

Do not apply a strong force by pulling the AC adaptor strongly while it is connected to the outlet. May case injury or a fault.

Do not drop or apply a strong force or hard shock to it. Internal substrate might be damaged. Moreover, do not use if the AC adaptor or cable is deformed, cracked or damaged. May case a fault, electric shock or fire.

Wipe off any dust or particles that accumulated on the power plug or the connection between the AC adaptor and a cable by using a dry clean cloth.
Failure to clean the dust may cause a fire, burns or electric shock.
Do a cleaning inspection once a year.

Unplug Always remove the power plug from the outlet when cleaning the equipment. May cause fire, damage or electric shock.

Battery charger is not waterproof.　Use it where any fluid (e.g. water, seawater, etc.) will not splash. Doing so may cause overheating, fire, electric shock or short-circuit resulting in a fault. If the fluid is on the battery

DRAFT

charger, remove the power plug from wall outlet immediately.

Never use the battery charger in humid places such as bathrooms. Doing so may cause electric shock or a fault.

Unplug Always remove the power plug of the battery charger from the outlet when not using it for an extended period of time. Moreover, remove AC adaptor from the battery charger. Failure to do so may cause a fire.

Do not use the AC adaptor, cable or power plug if it gets damaged. May cause an electric shock or fire.

When you insert and remove the power plug of the AC adapter from power outlet, do not contact a metal strap or other metal objects with the jack. May cause fire, burns or electric shock.

Do not place heavy objects on the cable. Doing so may cause injury, fire or electric shock.

Do not damage, modify, heat, twist, pull or place a heavy object on the cable of the specified charging equipment. Do not use a damaged cable. Doing so may cause an electric shock, short circuit or fire.

DRAFT

Material List

Part		Material	Surface treatment
Head Mounted Display			
	Display panel	Acrylate resin	AR coating
	Display cushion	Synthetic leather	-
	Power key, home key	PC resin	Acrylic UV curable coating
	Exterior case	PC resin + ABS resin	Acrylic UV curable coating
	microUSB connection cap	PC resin + Polyester elastomer resin + silicon resin	Acrylic UV curable coating
	microSD card slot cap	PC resin + Polyester elastomer resin + silicon resin	Acrylic UV curable coating
	Earphone connection jack cap	PC resin + Polyester elastomer resin + silicon resin	Acrylic UV curable coating
	Diopter adjuster cap	PC resin + Polyester elastomer resin + silicon resin	Acrylic UV curable coating
	Hook-and-loop fastener	nylon	-
	screw	Stainless steel	trivalent chromate coating
	label	polyester	-
Fitting belt			
	Head adjuster	polyethylene	-
	Belt attachment	polypropylene	-
	Side cushion	polyester	-
	Top band(clip)	Polypropylene(POM resin)	-
	Front band	synthetic rubber	-
Helmet clip			
	body	PC resin + ABS resin	-
	Shaft & shaft lock	Stainless steel	-
	Screw	POM resin + Stainless steel	-

DRAFT

	Knurling screw	Stainless steel	-
Battery pack			
	Body	PC resin	-
	contacts	Nickel	Gold plating
	Label	polyester	-
Battery charger			
	Body	PC resin + ABS resin	-
	contacts	Beryllium copper	Gold plating
Wearable Keyboard			
	body	PC resin + ABS resin	Acrylic UV curable coating
	key	urethane acrylate	UV curable coating
	wearable keyboard belt	Styrene/ Butadiene rubber	-
	microUSB connection cap	thermoplastic elastomer	
	Screw	steel	
	screw	Stainless steel/	trivalent chromate coating

DRAFT

Handling precautions

This product is to wear on a head and is designed to have the motion space. Please be careful to have a sufficient distance so that you will not get caught in a machine such as robot arms while wearing this product.

●Do not put conductive materials (metal pieces, pencil lead, etc.) inside the product, keyboard and battery charger.
●Do not drop the product, keyboard, battery charger, AC adaptor or subject it to shocks when carrying. Protect from excessive force or vibration by placing it in a bag.
●Adjust the arm of the product so that the display will be about 3cm away from and in front of your eye.
●Adjust the display to left, right, up or down in order to visually recognize the four corners of displayed image.
●When the display is placed in front of an eye, the eye is blocked by the

display.　When it's necessary to secure the sight, move the display to below your eye. If you are not looking at the display, shift the arm to the side.
●Do not operate the product while walking, running, driving a car, motorbike or riding a bicycle. May cause an accident.
●Do not use the product in an intensely shaky or unstable.　May cause dizziness, nausea, headache or motion sickness.
●When you do some work while looking at the screen, be mindful of any objects in the areas around your feet, hands and overhead. Please be careful about an accident by fall, an injury by fall and a falling object.
●Seeing an image that has large degree of shaking, an intensive blinking and intensive movement may cause dizziness, nausea, headache or motion sickness.
●May cause harm to your eyes if there is a big difference between brightness of a display and ambient light.
●Be careful with obstacles and other people when there are many vehicles or people, a crowded place or a narrow place.
●Seeing the display continuously for a long period of time may cause eyes to fatigue. Please get moderate rest periodically.
●It is recommended to get rest since peripheral visual field narrows by fatigue after use. Drive or ride safely when driving a car, a motorcycle or a bicycle after use.
●Those who are 15-year-old or younger should not use the product since there may be an adverse effect on their visual function.
●Do not use this product if a person had a convulsion, epileptic's attack or loss of consciousness by flash of lights.
This product may cause similar symptoms.
●Do not use this product if you are in a poor physical condition. Using this product may worsen your physical condition.
●Do not use this product if you have a disorder or deficiency in your eyes. May aggravate squint, weak eyesight or anisometropia.
●Stop using the product immediately and rest until you feel better when you are not feeling well or feel uncomfortable during use.
●People around you may hear your conversation when you talk on the phone using speakers. If it is not desirable, please use earphones.

DRAFT

Bluetooth®/Wireless LAN (Wi-Fi®) function

●This product supports security features for wireless communications that are compliant with the Bluetooth® and Wi-Fi® standard specifications, but the security may not be sufficient depending on the usage environment and configuration. Be careful when making data communication using Bluetooth® or wireless LAN (Wi-Fi®) function.

●Wi-Fi® has the advantage that it can be freely connected anywhere within the radio wave range, as it uses radio waves for exchanging information. At the same time, there is a risk that a malicious third party may obtain unauthorized access if security settings have not been configured. You are recommended to configure security settings before using wireless LAN at your direction and responsibility.

●The Company assumes no responsibility for leakage of data or information that may occur during Bluetooth®/ Wi- Fi® communication.

Notes on waterproof/dustproof property

Before using the product, thoroughly read below to ensure correct use. Failure to follow the contents described in these sections may cause intrusion of water, sand or other foreign material, resulting in overheating, ignition, electric shock, injury or a fault.

■Waterproof/Dustproof

There are microUSB connector cap, diopter adjustment cap, microSD card slot cap, battery cap, external audio connection jack cap on this product. Moreover, there are microUSB connector cap and battery cover on the keyboard.

The product provides waterproofness of IPX5, IPX7 end dustproof of IP5X with firmly closing all the caps and a battery cover (based on in-house testing).

[Equivalent to IPX5]

IPX5 equivalent means that the product will maintain its operability as HMD even if it is sprayed with water from a 6.3 mm diameter nozzle at a distance of about 3 meters for more than 3 minutes at a rate of about 12.5 liters per minute from any direction.

DRAFT

[Equivalent to IPX8]
IPX8 equivalent means that the product will maintain its performance as HMD with no water getting inside the main unit when the main unit is gently submerged in a tank of still tap water at room temperature to a depth of 1.0 meters and left for about 30 minutes.
[Equivalent to IP5X]
IP5X means a protection degree that HMD keeps functioning and safety after it is placed in a device with dust in diameter 75μ or less for 8 hours, agitated and then taken out.

However, proper operation of the product in every possible condition during actual use is not guaranteed. Malfunctions determined to be caused by mishandling by the customer are not covered by the warranty.

■Important items to remember before use
●Do not place the product directly on sand at a beach etc. Sand or other small particles might get inside the receiver/speaker, microphone, etc. causing the volume to drop. If sand gets inside the product, it might cause overheating or a fault.
●Close all the caps and a battery cover firmly and make sure that there are no spaces between them and the product.
●Waterproofness is only effective when all the caps and the cover are securely closed.
●Even a small particle (a hair, a grain of sand, fine fiber, etc.) between the product and the caps or the battery cover and the keyboard could cause water leakage.
●Do not poke the microphone and the speaker holes shown below with a sharp object. Damaging waterproof membrane may result in water leakage.

DRAFT

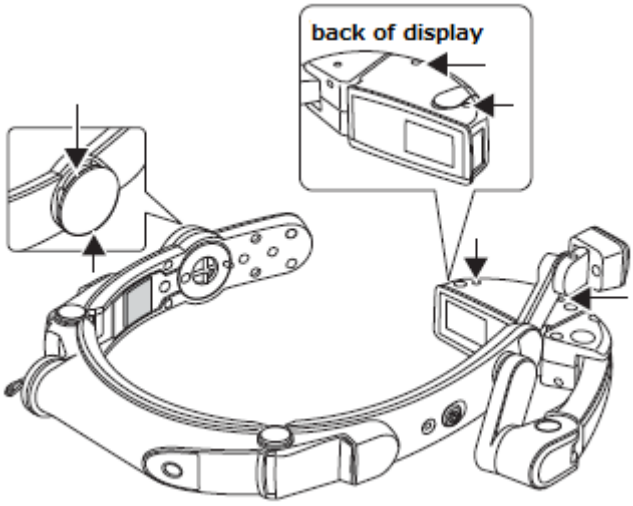

●Do not open/close the cap and the battery cover if the product or your hands are wet.
●Do not use the product underwater (including button operations).
●Do not leave the product in a humid place for an extended period of time.
●The product main unit is waterproof only against fresh water and tap water (5°C to 35°C). Do not splash or soak the product into the following liquid. Do not apply or attach sand or mud to the product. Ex: soap water, detergent water, seawater, pool water, hot spring water or boiled water.

■Tips for comfortable use

●Once the product gets wet, water may remain in gaps of the product. Shake the product well to drain water. Especially make sure to drain water that are remaining inside the buttons.
●Water may remain on the product after draining. Although you can use the product, do not place it near things that must not get wet. It may wet your clothes, bag or contents of the bag.
●Drain water if it becomes temporarily hard to hear the sound due to water remaining in the microphone. Please see draining section for more details. (→P.33)
●Although you can hold the product with wet hands, do not immerse the product into water.
●Do not use the product underwater. Doing so may cause a fault.
●Extreme changes in temperature cause condensation. Wait until the product reaches room temperature before you bring the product from a cold place into a warm place.

DRAFT

●Do not splash the product with hot water. The product is not resistant to hot temperatures.
●Use within an ambient temperature range of 5°C to 35°C and humidity range of 20% to 80%.
●Do not apply a strong water flow (more than 6 liters per minute).
●Do not drop the product.
●Do not use or leave the product under direct sunlight or in a hot place.
●You can wash the product under a mild flow (up to 6 liters per minute) of tap water at room temperature (5°C to 35°C) at a distance of about 10 cm from the faucet or showerhead. Do not spray the product with high-pressure water or submerge it in water for extended period of time, as the product is not designed to withstand high water pressure.
●Make sure to hold the caps or the cover so that it does not open. Wash the product with your hands. Do not use a brush or sponge.
●Do not wash the product in a washing machine or ultrasound bath.

■To maintain waterproofness/dustproofness

Note the following points to maintain waterproofness/dustproofness.
●To insert/remove the microSD card, use your fingertip to pull the indent of the microSD card slot cap to open. For more details, please see procedure 1 in "Inserting/removing microSD card". (→P.77)
●To use microUSB on the product or the keyboard, use your fingertip to pull the indent of the microUSB connector cap to open.
- For the product
  Please see "Connecting a microUSB cable" for more details. (→P.78)
- For the keyboard
  Use your fingertip to pull the indent of the microUSB connector cap to open shown below.

DRAFT

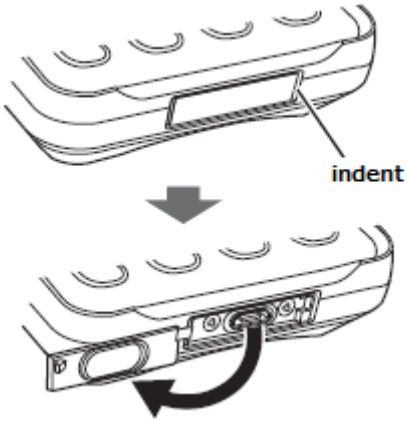

●When adjusting visibility, use your fingertip to pull the indent of the diopter adjustment cap to open. Please see procedure 3 in "Adjusting visibility/position" for more details. (→P.60)
●To insert/remove the battery pack, turn the battery cap counterclockwise direction to open. Please see procedure 1 in "Attaching/Removing battery pack" for more details. (→P.42)
●To attach an earphone, use your fingertip to pull the indent of the earphone connection jack cap to open shown below.

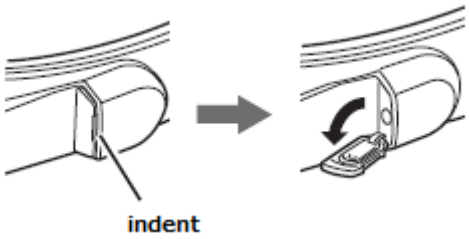

●To change the dry batteries of the keyboard, unlock the locks and place a fingertip on a tab of the battery cover on each side to open.
Please see procedure 1 and 2 in "Attach the keyboard" for more details. (→P.55)
Moreover, close the caps and the battery cover by pushing firmly and make sure that there are no spaces between them.

The caps (microUSB connector cap, Diopter adjuster cap, microSD card slot cap and Earphone connection jack cap on the product and microUSB connector cap on the keyboard) are designed to be removed.
If the cap is removed, place it back to the original position and push it in.

DRAFT

Example: microUSB connector

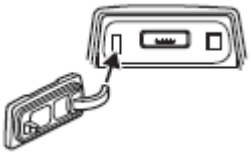

□Rubber seals

The rubber seals around the caps are important to maintain waterproofness/dustproofness. Note the following points.

●Do not remove or damage the rubber seals.

●When closing the cap, be careful not to let the rubber seals get caught. Forcibly closing the cover with the rubber seals caught may damage them resulting in loss of waterproofness/dustproofness.

●If any liquid other than fresh water and tap water (hot water, seawater, detergent, chemical, sweat, etc.) at room temperature (5°C to 35°C) gets on the product, it may cause deterioration in waterproofness/dustproofness.

●Do not open/close the cap with gloved hands. Do not get dust on the product. A small particle (a hair, a grain of sand, fine fiber, etc.) on the seals could cause water leakage. If small particles are attached to the product, make sure to remove them with a clean dry cloth.

●Do not insert sharp objects into gaps of the cap. Doing so may damage the rubber seals, causing water leakage.

●It is recommended to replace the rubber seals (charged service) for maintaining waterproofness/dustproofness once every two years regardless of whether any abnormality is present. For information on rubber seals replacement, contact your local sales representative.

□When liquid other than water are attached on the product

If any liquid other than plain water (e.g. seawater, detergent, sand or mud) attached on the product, immediately rinse it with plain water.

□After the product gets wet

If the product gets wet, drain water and wipe off water drops on the product with a clean dry cloth.

* Do not leave the product without wiping off water. Doing so may short-circuit the connector.

DRAFT

* Do not leave the connection jack without wiping off water.
* In cold climates, water on the product may turn to frost. Using the product with frost may cause a fault. Do not leave the product without wiping off water.

•If the product gets wet with water or snow, wipe off with a clean dry cloth. Be careful not to get your clothes or bag get wet with water that could not be wiped off or water remaining in the gaps.

■Draining

If you use the product with water drops on its surface, volume of the speaker may be lower or may wet your clothes or bag.
Also, if water may have gotten into the product through gaps on the button for example, follow the steps indicated below to remove water from the product and the keyboard.

□For the product

Water could be collected in the speaker, the microphones(MIC), Home button and Power button shown below with arrows.

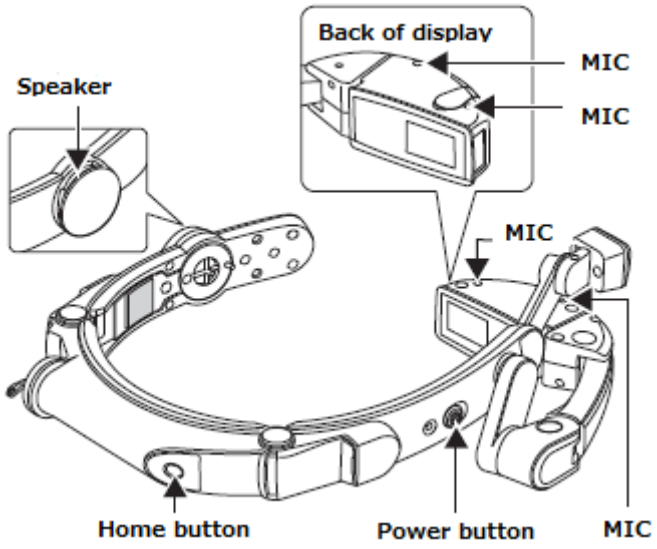

Firmly holding the product and shake it until there is no water as shown below.

DRAFT

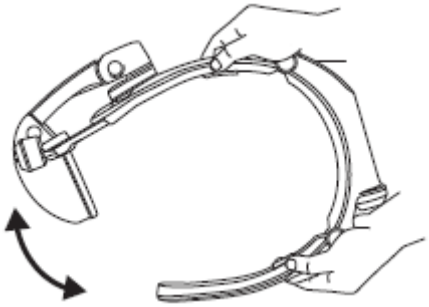

□For the keyboard
Water could be collected in the microUSB connector. Open the microUSB connector cap, firmly holding the keyboard and shake it until there is no water as shown below.

■Charging precaution
The battery charger is not waterproof/dustproof. Be sure to check the following points before and after charging.
●Never charge the wet battery pack. If you charge the battery pack just after the product gets wet, drain water well and wipe remaining water off with a clean dry cloth before placing it in the charger.
●Do not touch the battery pack and battery charger with wet hands. Doing so may cause electric shock.
●Do not splash water over the battery pack and battery charger when using them. Doing so may cause fire or electric shock.
●Do not use the battery pack and battery charger near water. Doing so may cause fire or electric shock.

■Cable connecting precaution
●Do not connect microUSB connector and microUSB cable if water is inside the connector. Doing so may cause fire or electric shock.
●Do not connect the power cable if water drops are on it. Doing so may cause fire or electric shock.

DRAFT

1. Part names and functions

Head mounted display

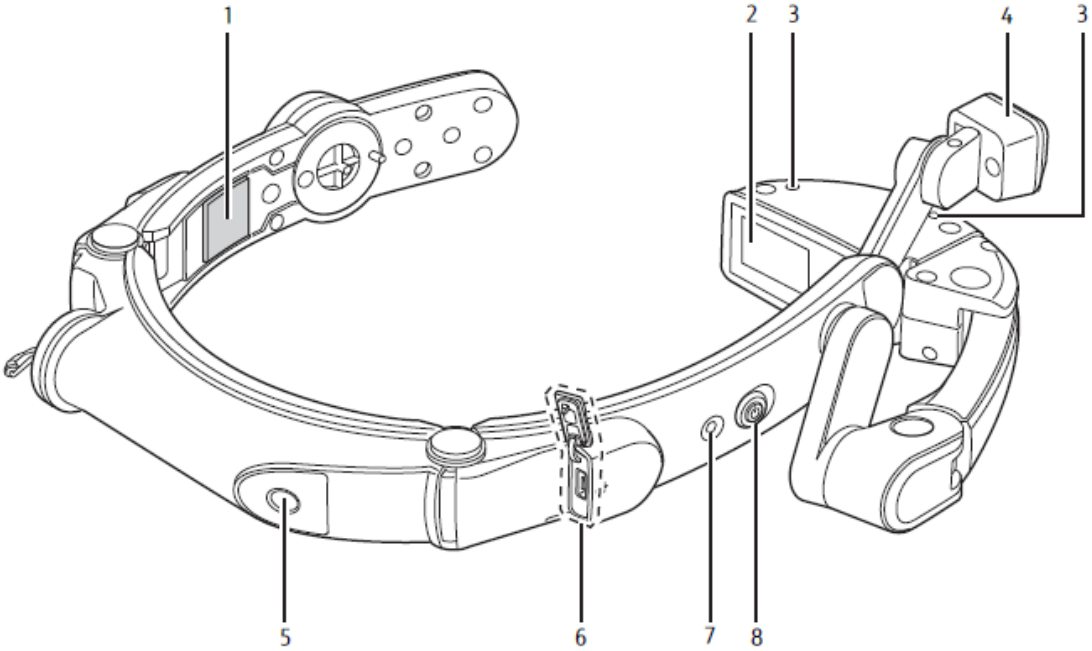

1 Hook-and-loop fastener

Attach hook-and-loop fastener comes with belt attachment.

2 Display

3 Microphone

4 microphones all together.

4 Camera

5 Home button

Shows the home screen

6 microUSB connector cap, microUSB connector ( )

Connect a microUSB cable. Please see “Connecting a microUSB cable” for more details. (→P.78)

POINT

The battery pack cannot be charged with microUSB that is connected to the product.

7 Power Indicator light

DRAFT

When the power is on after pressing the power button, the green light will light up but lights off after a period of time.

8 Power button(⏻)

Following can be done by pressing the power button.

Power button operation	Detail of operation
Press the power button once	Turn ON/OFF screen
Hold down the power button for few seconds	Power ON/OFF
Hold down the power button for more than 13 seconds	Reboot

Note: When there is not enough battery, the product will not boot even the power button is pressed. Red power indicator light will flash 3 times.

DRAFT

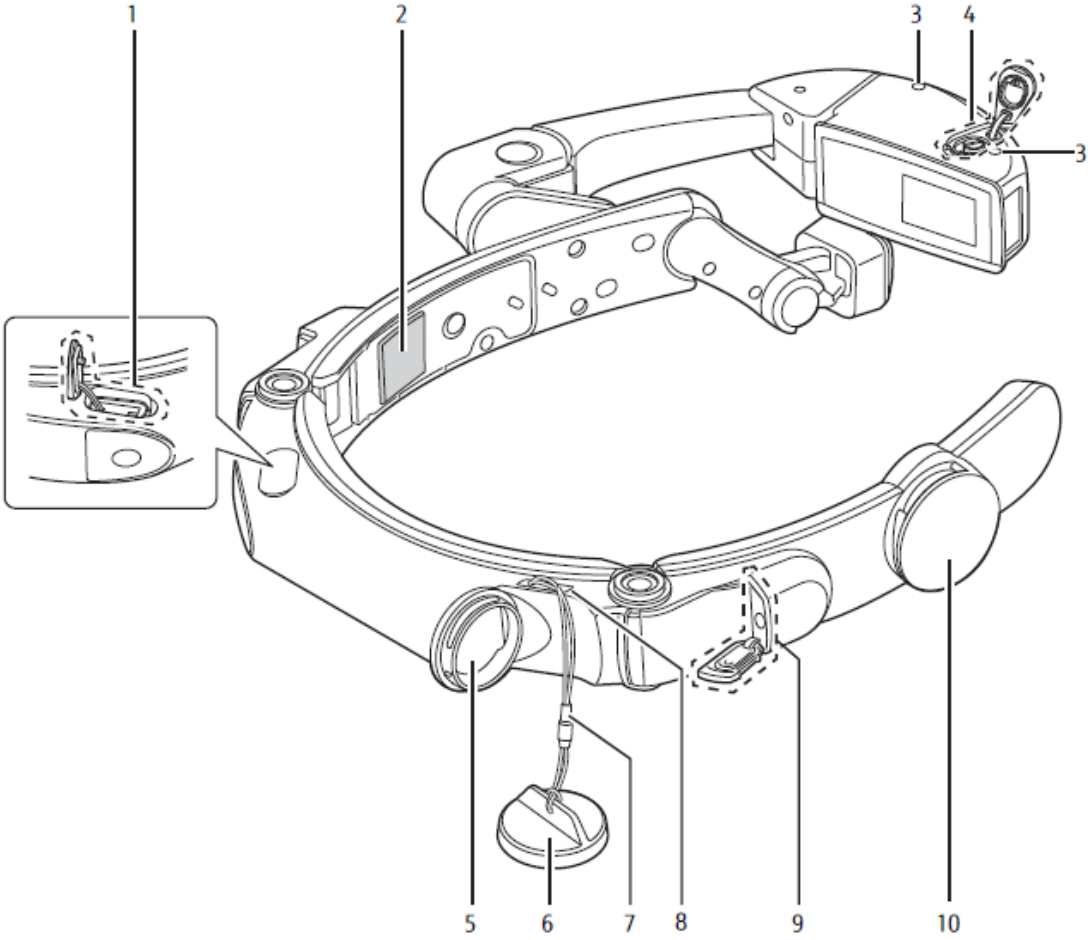

1 microSD card slot cap, microSD card slot ( )

Please see microSD card for more details. (→P.77)

2 Hook-and-loop fastener

Attach hook-and-loop fastener comes with belt attachment.

3 Microphone

4 microphones all together.

4 Diopter adjustment cap, diopter adjustment screw

Diopter adjustment is used when the display is hard to see.

Please see “adjusting visibility” when the display is hard to see. (→P.60)

5 Battery Pack

Rechargeable battery pack.

Please see “Charging the battery pack”. (→P.40)

6 Battery cap

7 Strap

8 Strap hole

9 Earphone connection jack cap, Earphone connection jack

10 Speaker

Keyboard

■Front

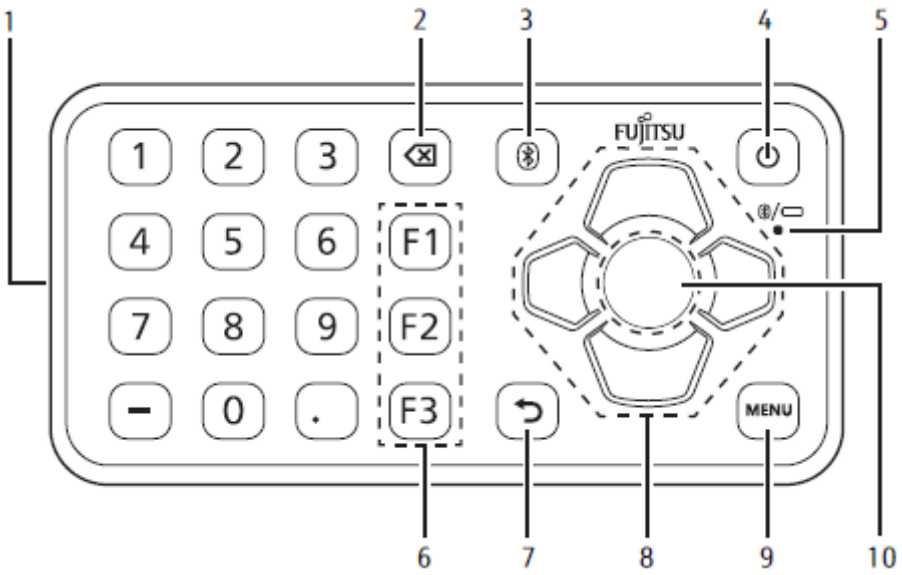

1 microUSB connector cap, microUSB connector

2 [BackSpace] key

3 [Bluetooth] key

4 [Power] key

Following can be done by pressing the power key.

[Power] key operation	Detail of operation
Press the power key once	Confirm remaining of dry batteries level - If the power is ON, Bluetooth/Power indicator light will be on. - If the power is OFF, Bluetooth/Power indicator light will NOT be on.
Hold down the power key for few seconds	Power ON/OFF. When the power is ON, Bluetooth/Power indicator light will be on.

IMPORTANT

Keyboard cannot be turned ON if the microUSB is connected. Make sure to pull the cord out before turning ON.

5 Bluetooth/Power indicator light(/)
Displays status of connection or remaining of dry batteries level.
Please see (→P.76)

6 One-touch button([F1]to[F3])
You can launch apps with a single action of pressing a button by pre-assigning apps to those buttons.

7 [Back] key( )

8 cursor key
Move cursor to up/down/left/right

9 [MENU] key

10 [Enter] key

■Back

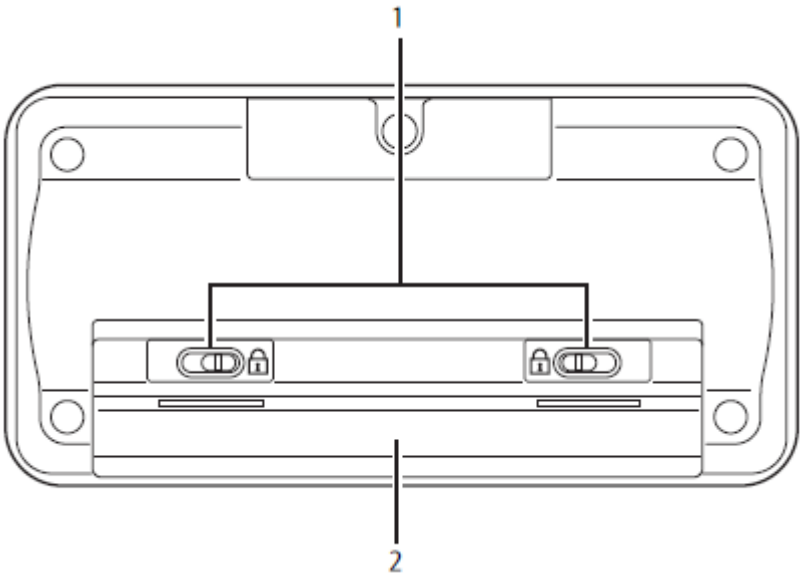

1 Lock button
Slide to open/close the battery box

2 Battery box, battery cover
Use two(2) AAA dry alkaline batteries. Please see “Attach the keyboard” to change the batteries. (→P.55)

DRAFT

2. Get started

Please follow the instructions how to prepare the product to be worn.

Charging the battery pack

The battery pack is not fully charged at the time of purchase. Charge the battery pack before using the product.

The explanation below is using the AC adaptor to charge.

■Parts name of the battery charger

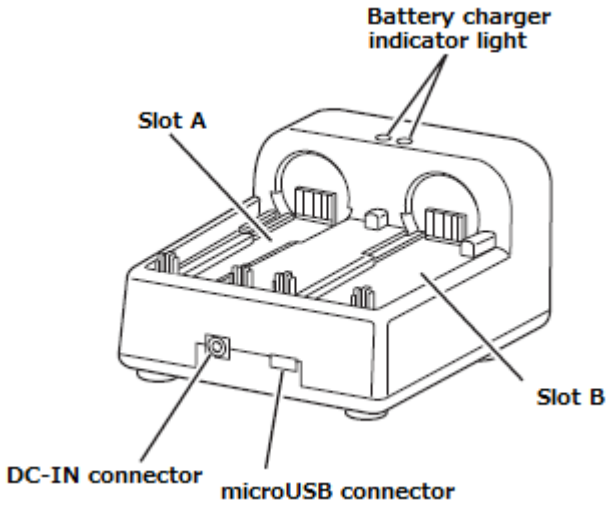

1 Attach the battery pack to the battery charger.
Align the metal contacts of the battery pack with those of the battery charger.

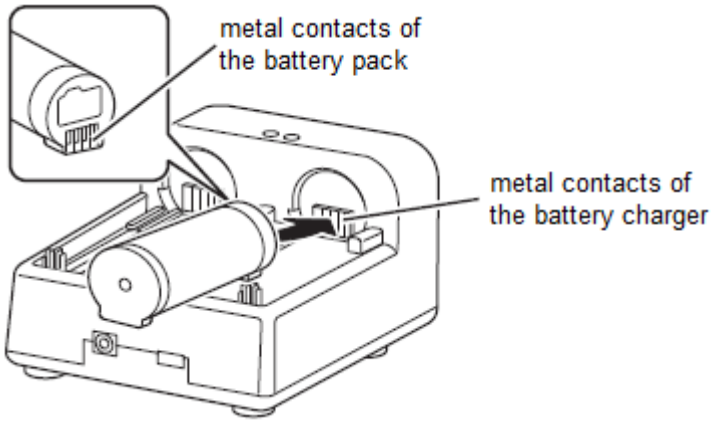

2 Insert the power cable to the AC adaptor.
3 Insert the power cable to the battery charger's DC-IN connector.
4 Insert the AC adapter's power plug into an outlet.

DRAFT

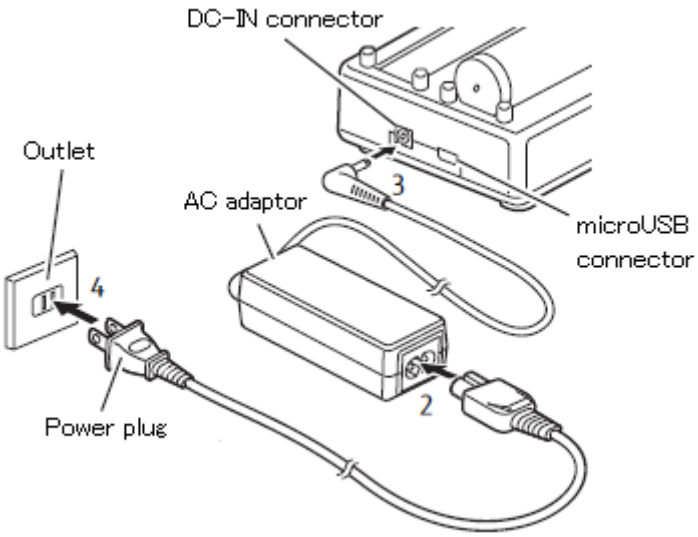

IMPORTANT For microUSB, with the B engraved side facing upwards, insert the microUSB plug of the microUSB cable straight into the battery charger.
Be careful not to connect the microUSB in wrong direction. It may damage the connector.

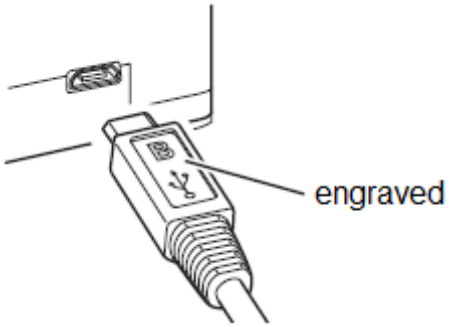

POINT

- When using DC-IN connector to charge, you may charge either 2 batteries at the same time or one battery at a time using either slot A or B.
- When using microUSB connector to charge, you may charge only 1 battery at a time using below equipment.
  - PC
  - smartphone
  - tablet

DRAFT

・AC adaptor with microUSB for smartphone and tablet

5　To check the status of charging

The state of the battery charger indicator light will be as follows.

Indicator light	Status of the battery pack
Lights red	Charging
Lights flashing	- Charging timer expired If charging is not completed after the specified charging time, the indicator light flashes. Remove the battery pack and recharge it. - Abnormal power voltage of the battery pack When power voltage of the battery pack is abnormal, charging error occurs and the indicator light flashes. Remove the battery pack and recharge it. If it continues to flash when trying to charge for several times, please contact your local sales representative.
Light turns off	Charge complete

IMPORTANT

- Charge in a place where an ambient temperature range of 5°C to 35°C
- Indicator light goes off and charging may stop temporarily when the temperature of the battery pack is out of temperature range. If the battery pack is hot, wait until it cools down and recharge the battery.
- The battery is a consumable item. If the performance of a battery pack does not recover (e.g. the usable time after each charge has become extremely short), the battery pack is at the end of service life. Stop using and replace with a new battery pack.

Attaching/Removing battery pack

1　Turn the battery cap counterclockwise direction to open.

Line-up marks on the cap and on the product.

DRAFT

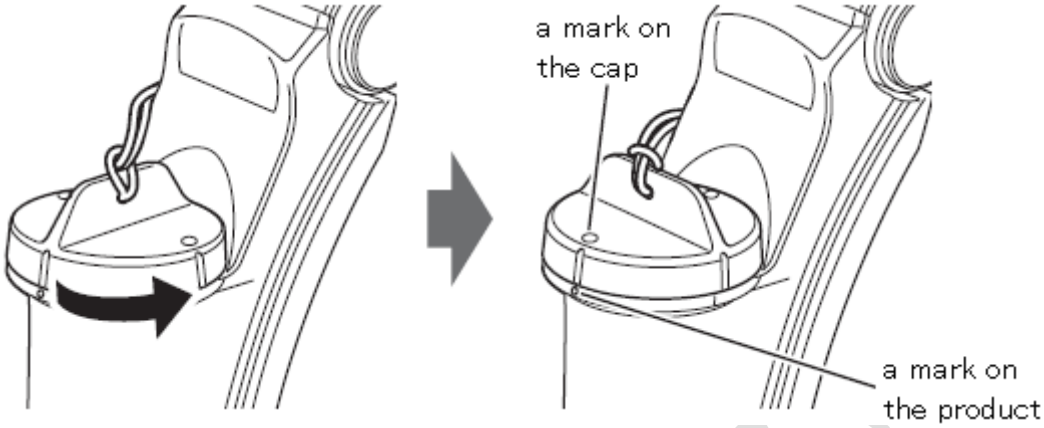

2 **Insert the battery pack to the product.**

Align the metal contacts of the battery pack with those of the product.

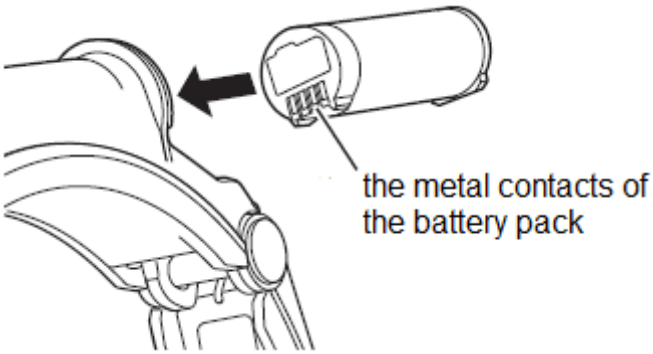

POINT

- To remove a battery pack from the product, slowly tilt the product. If tilt fast, the battery pack may pop out.

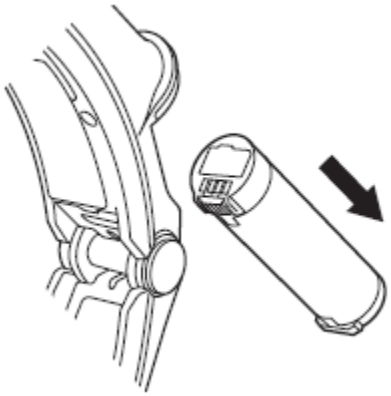

3 **Align and push the battery cap as shown below.**

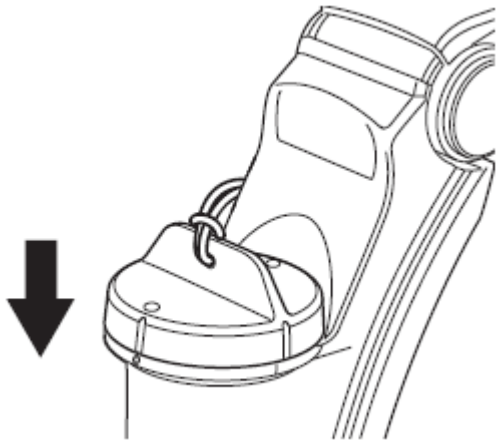

4 **Turn the battery cap clockwise direction to close.**
Line-up a mark on the cap and a mark on the product.

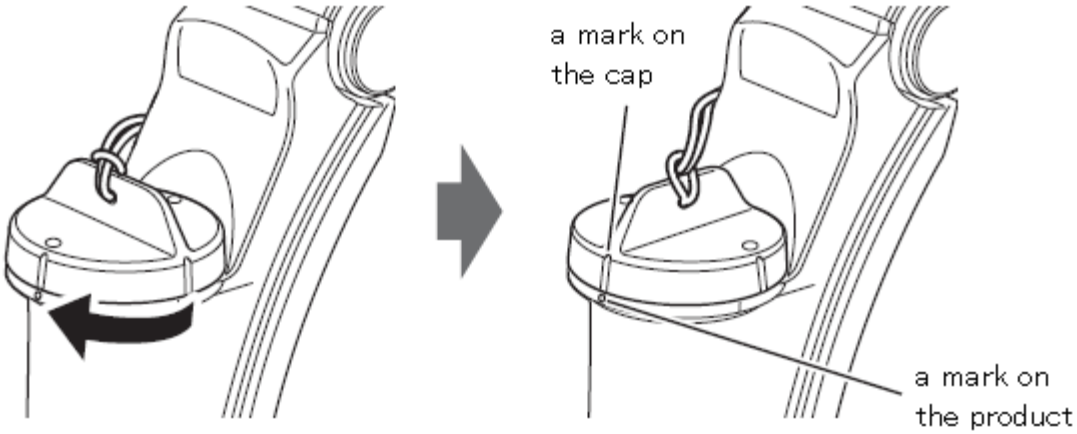

Decide the orientation of the product

This product can be used on both left and right eyes. Please decide which eye to see the display. The explanation in this manual is the right eye case.

■use on the right eye

■use on the left eye

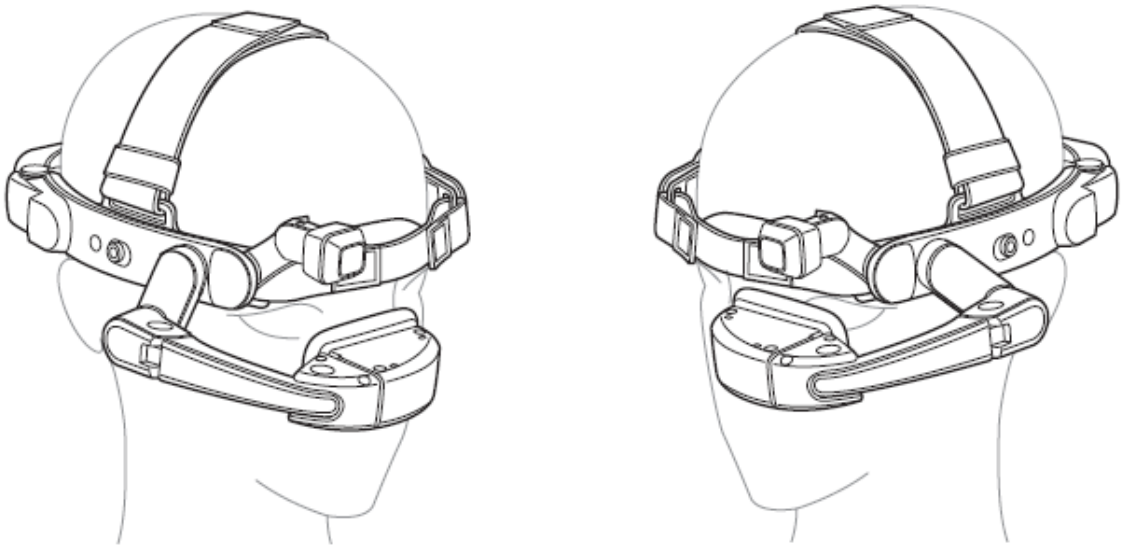

POINT

To use on the left eye,

1 Move the joint with dotted-circles shown below and reverse the camera and the display positions.

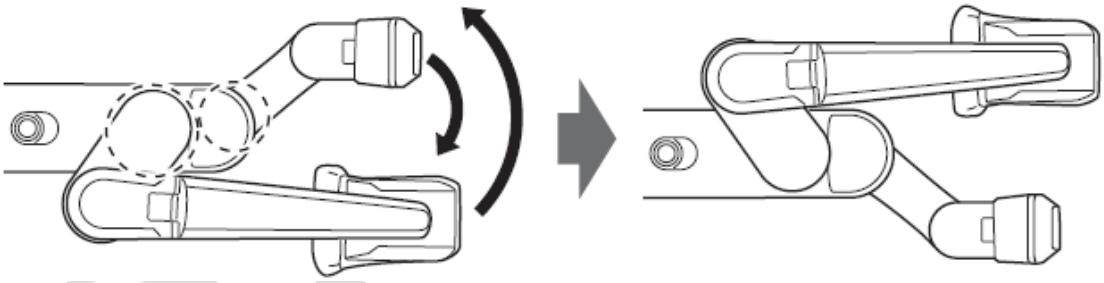

2 Turn the product upside down to use on the left eye.
To adjust the view, move the joint with dotted-circles shown below.

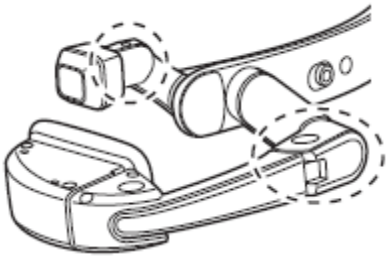

Wearing the product

This product is designed to be worn either directly on the head or on a helmet.

The procedures are different depending on how you wear.

■Wear on the head

Please see “Assemble the fitting belt” (→P.46)

■Wear on a helmet

Please see “Attach to a helmet” (→P.52)

Assemble the fitting belt

Assemble the fitting belt to be attached to the inner side of this product.
The length of the belt can be adjusted at the end so please assemble it first as explained below.

1 **Attach belt attachments and head adjusters to the product.**
Attach to the place where circled below.

<Below image shows how the belt attachments and head adjusters are attached.>

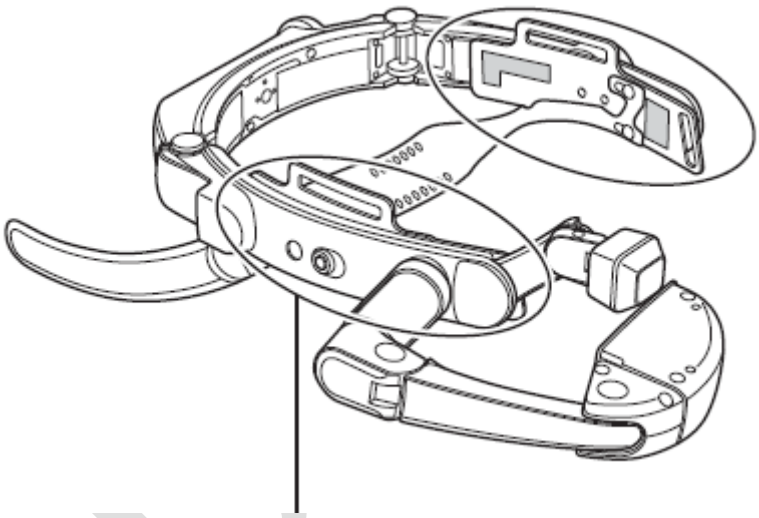

The following explanation is how to attach the belt on this side(right side).

1. A single hook-and-loop fastener on the right belt attachment should be touching the product and align the positioning holes.
   Check to see if the positioning holes are aligned correctly.
   If they are not aligned, unstick the hook-and-loop fastener on the back of the belt attachment by pulling and align the holes.
   After the holes are aligned, stick the hook-and-loop fastener.

Hook-and-loop fastener on the back of the belt attachment by

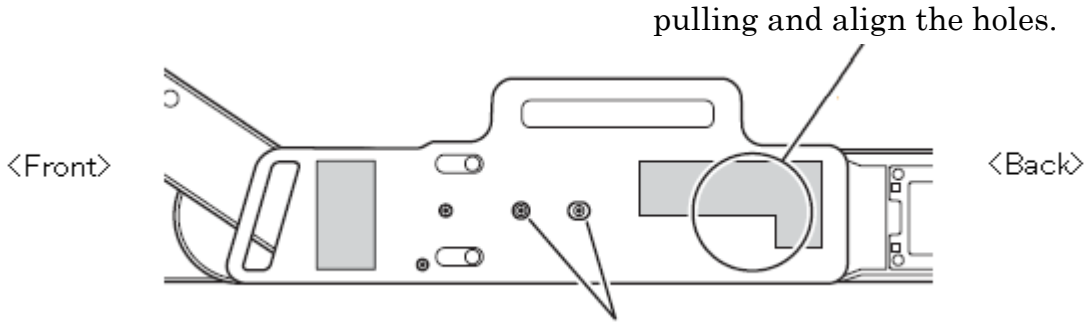

2. Stack the right head adjuster and right belt attachment and align the positioning holes. Check to see if the positioning holes are aligned correctly.
   Head adjuster has an orientation so make sure the ratchet part will be on the back side.

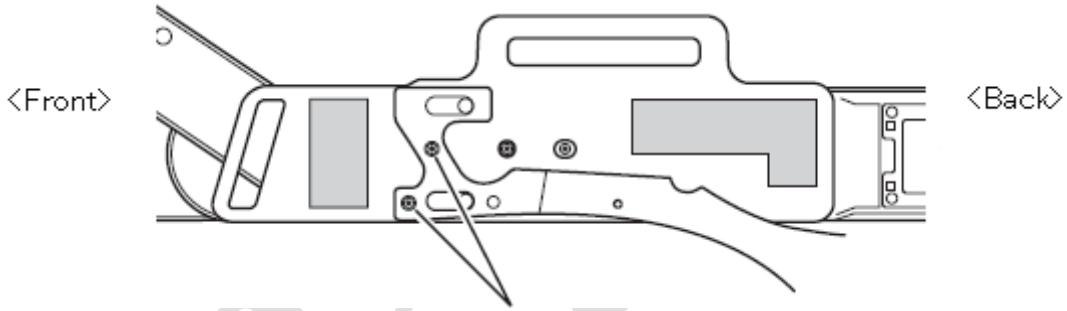

3. Two places will be set with knurling screws.
   Use a flat blade screwdriver or a coin to turn and tighten the screws.

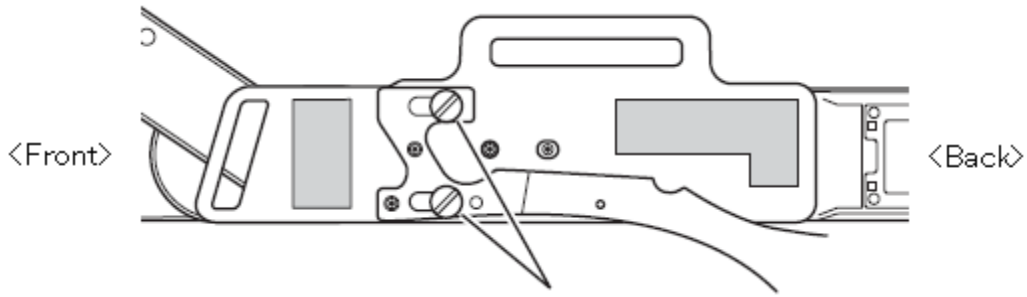

4. Attach left belt attachment and left head adjuster to the left side as you did to the right side.

2 Attach the top band to the belt attachments.

POINT

You may attach the top band to either side but it will be easier to adjust if the hook-and-loop fastener is on your dominant hand side.

1. After a side of a top band that is cut roundly is put into a hole on the belt attachment, the top band is inserted to the adjuster from the outside to the inside.
2. The top band is inserted into the adjuster as shown in the figure and fixed.
3. After opposite side of the top band is inserted into a hole on the belt attachment, pass the top band into a rubber band and attach the fixed hook-and-loop fastener.

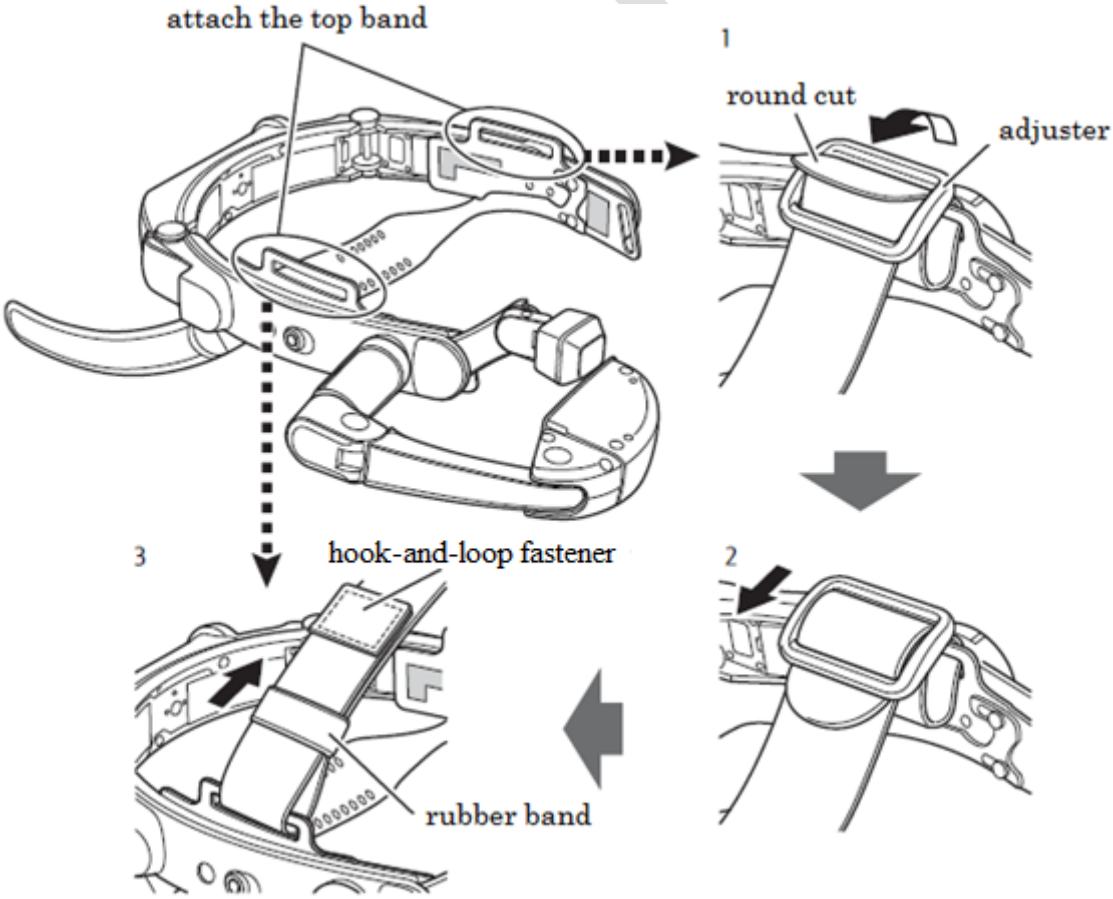

3 **Attach the front band to the belt attachments.**

1. The front band is into a hole on the belt attachment shown below.
2. Do the same for the other side.

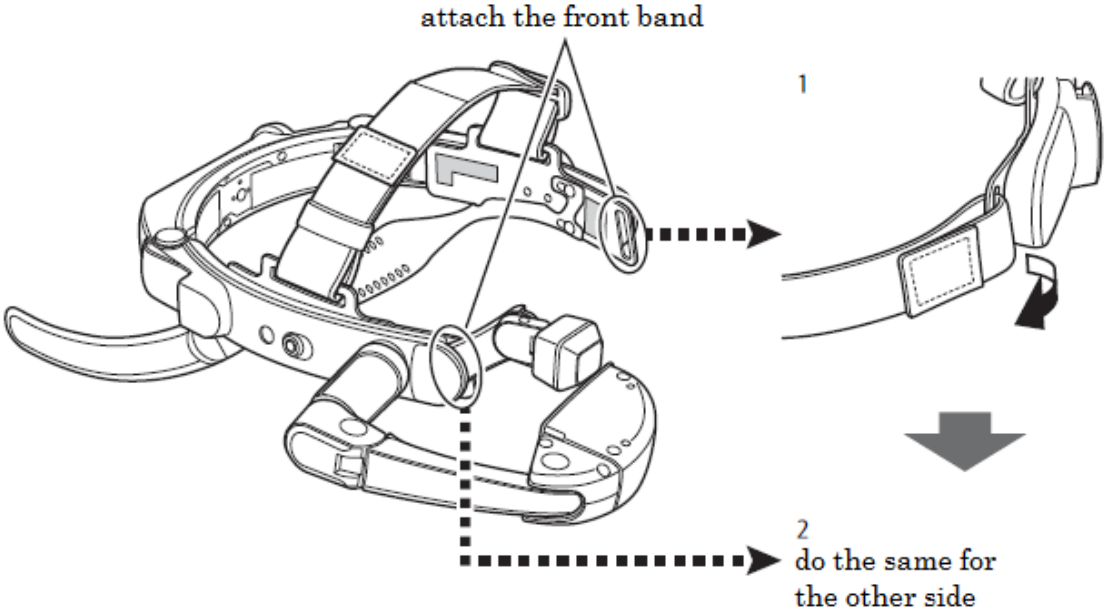

4 **Insert the head adjuster.**

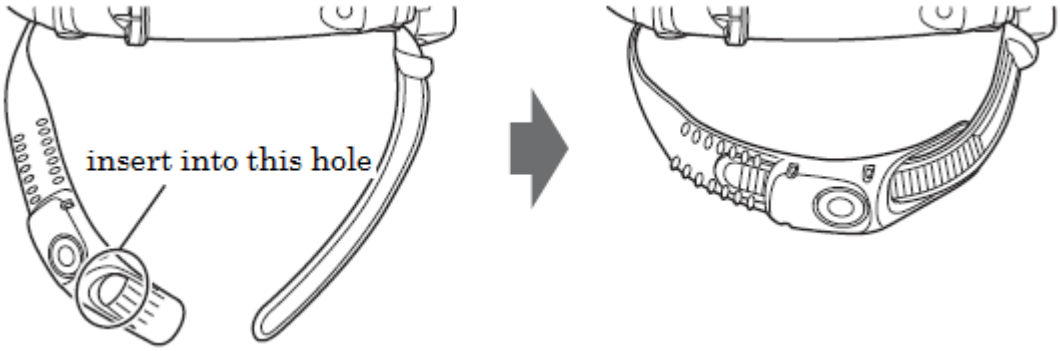

<Below image is a condition in which the fitting belt is attached.>

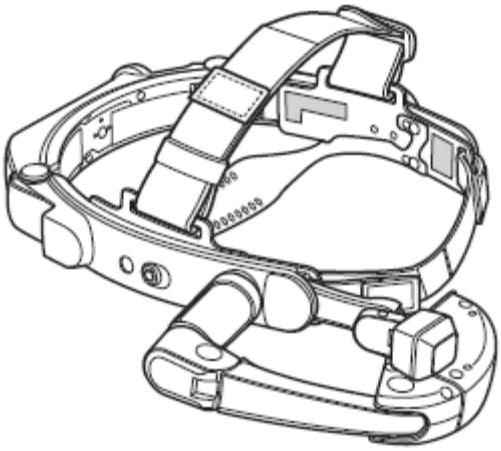

5 Attach the side cushions to the inner sides of the fitting belt.

1. Attach the hook-and-loop fastener on the side cushion to the belt attachment.
2. Do the same for the other side.

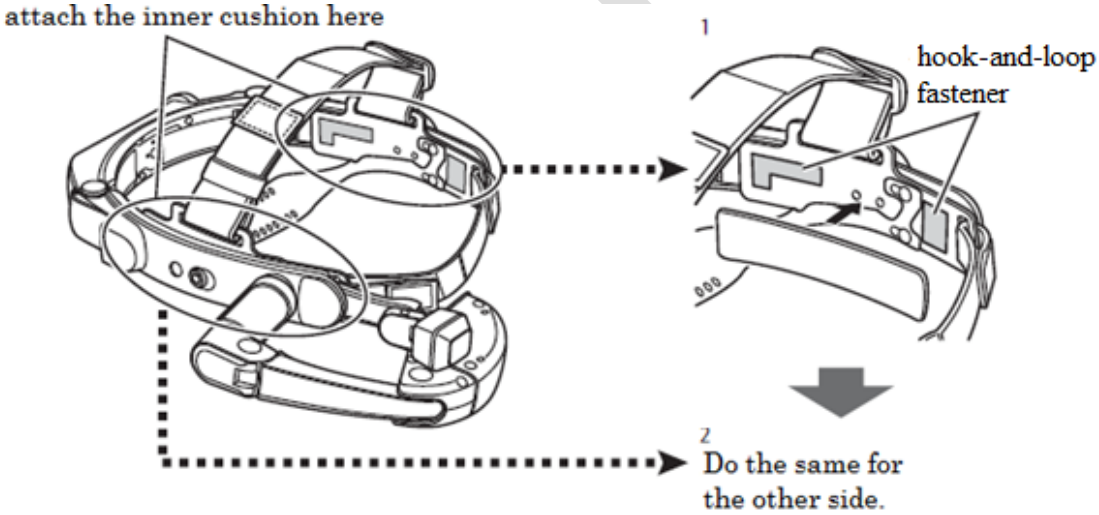

6 Attach the display cushion to the display.

Start attaching the display cushion to the dotted-circle shown below.
Wrap the projecting part of the display with the cap part and cover with the display cushion.
When covering, please don't insert the cap part inside.

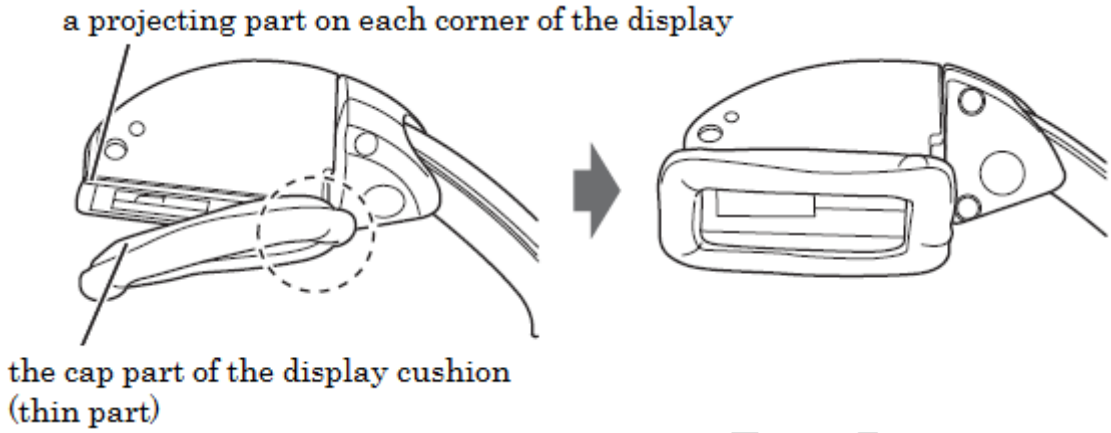

This is the end of assembly.

Adjust/wear HMD on your head

If you wear glasses normally, keep wearing glasses and use the HMD. After wearing, please adjust the length of the band to fit your head.

1 **Wear HMD on your head.**
2 **Adjust the head band first and adjust the front band by setting the hook-and-loop fastener.**

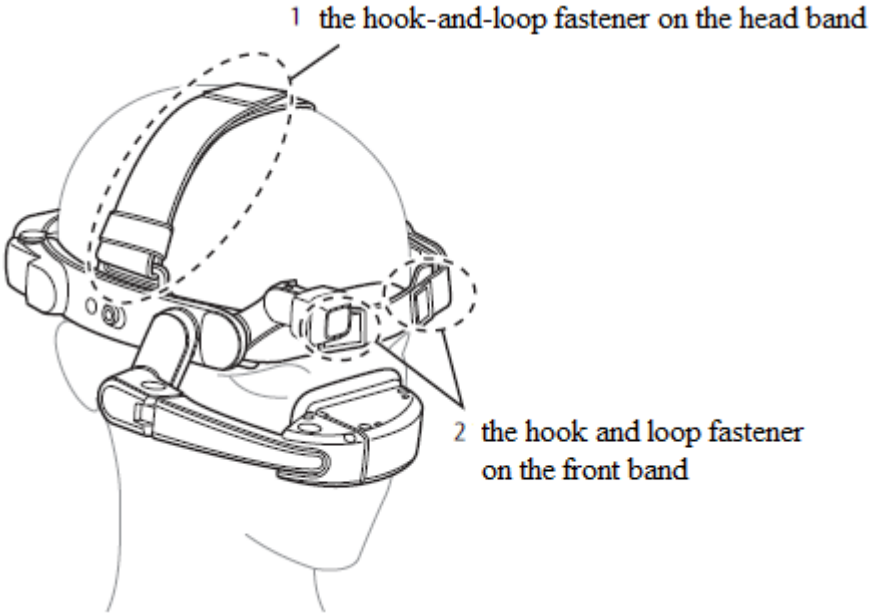

3 **Adjust the ratchet on the head adjuster**
Adjust so that the speaker will be on top of your ear.

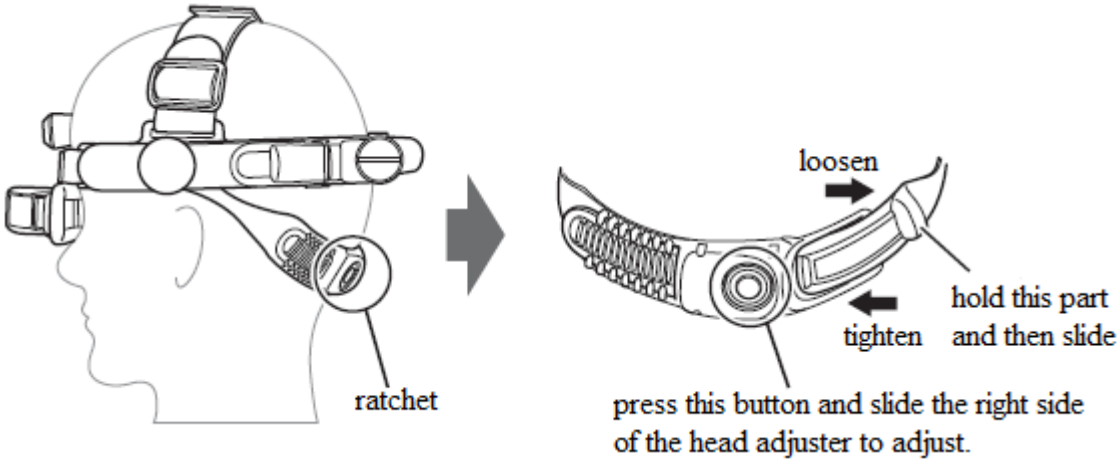

Continue to wear the keyboard on your arm. Please see “Attaching the keyboard”. (→P.55)

Attach to a helmet

You may install and use HMD on a commercially available helmet.
However, some of the helmets may not be compatible with the product.

1 Attach the left and right helmet clips to the product.

1. Stack the helmet clip and the product and align the positioning holes.
   2 places will be set with knurling screws.

DRAFT

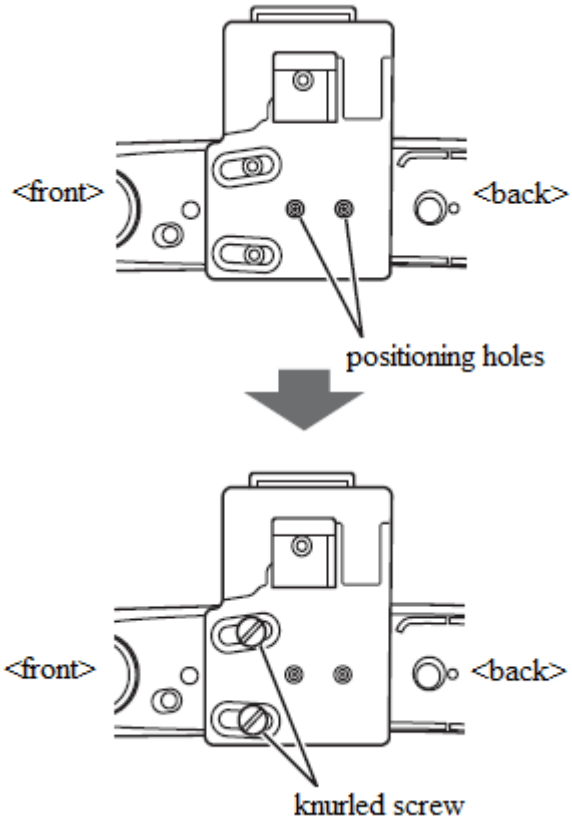

2. Do the same for the other side. Use a flat blade screwdriver or a coin to turn and tighten the screws.

2 Loosen the screws attached to the helmet clips.

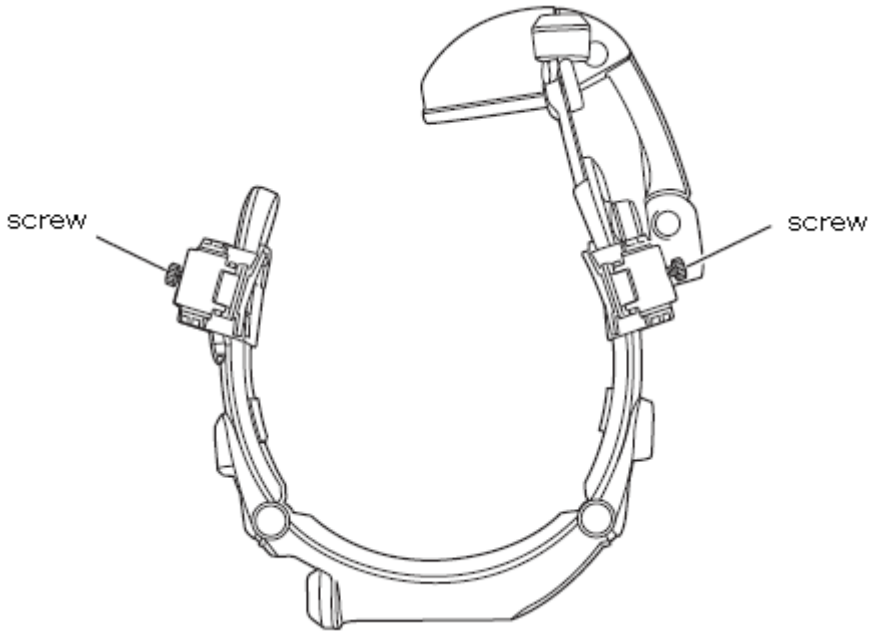

3 **Decide where to place the product on the helmet and attach the product.**

If the helmet has a chin strap, put the strap inside the helmet before attaching the product.

If the place to attach the product is decided, place the product into the gap of the helmet clips and tighten the screws.

If the product isn't attached in the proper location of the helmet, the product may touch your ears when wearing the helmet.

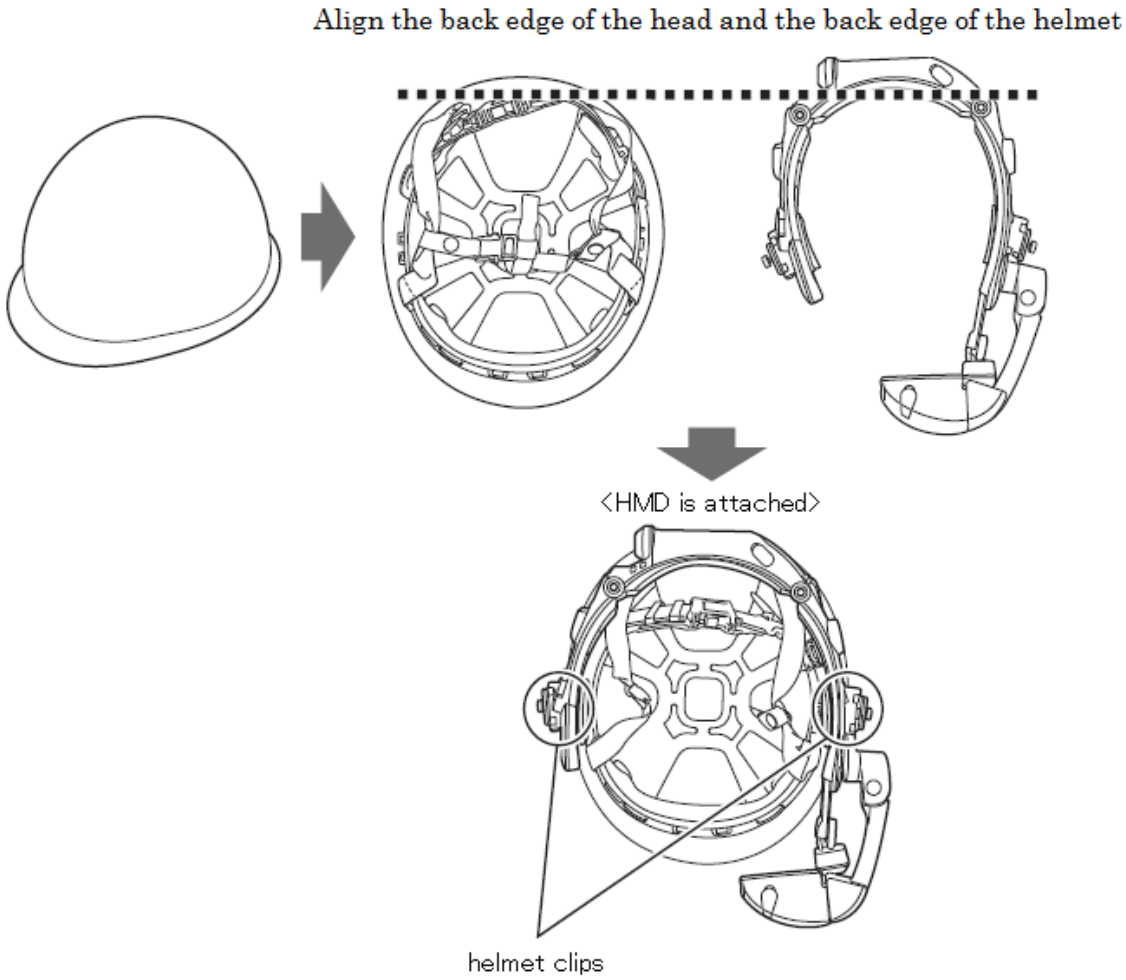

4 **Attach the display cushion to the display.**

Start attaching the display cushion to the dotted-circle shown below.

Wrap the projecting part of the display with the cap part and cover with the display cushion.

When covering, please don't insert the cap part inside.

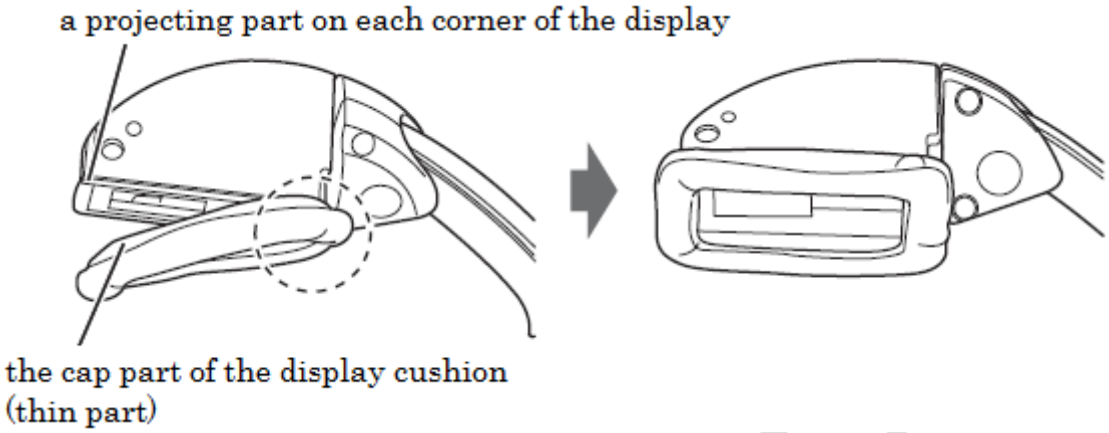

5 **Wear the helmet**

Attach the keyboard

How to insert batteries and wear the keyboard to your arm is explained.

1 **Slide to unlock the battery box.**

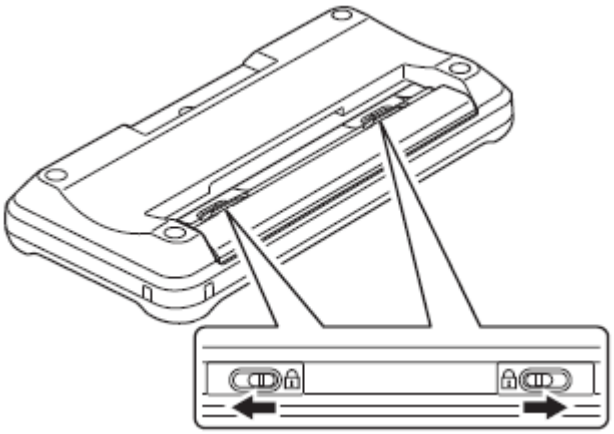

2 **Open the battery box cover.**

Place a fingertip on a tab of the battery cover on each side and pull with an angle to open.

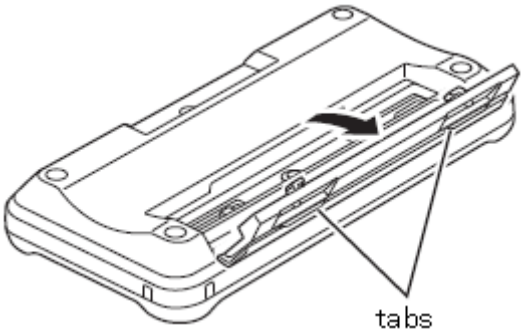

3 **Two(2) AAA alkaline batteries are placed inside from the right side.**
When putting the first battery, put it from the left side and slide it to the right side since there is a metal piece on the right side of the battery box.

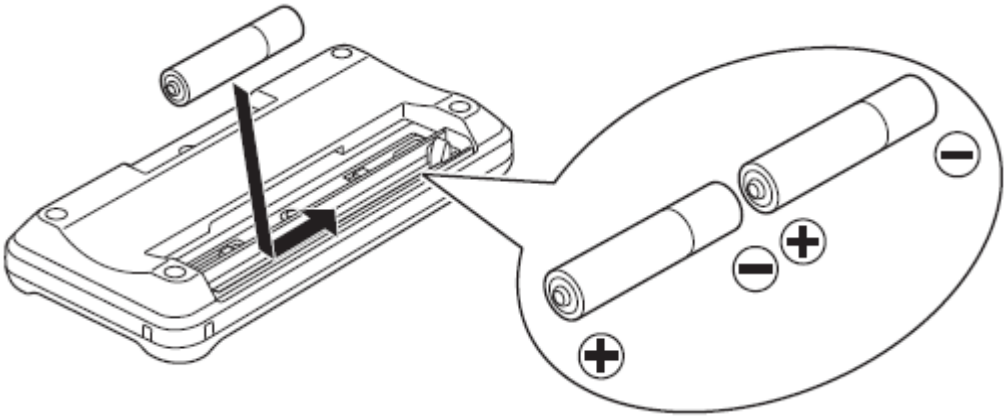

IMPORTANT

- Be careful with the orientation of the battery.
- Don't mix battery types and don't mix old batteries with new batteries.

4 **Close the battery cover by joining tabs and tab holes.**
Make sure the lock is unlocked and set it firmly.

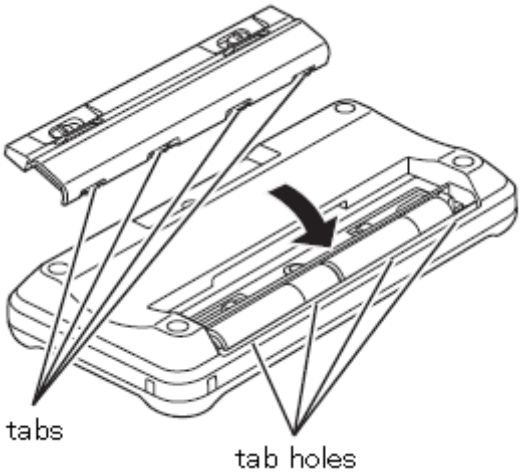

5 **Slide the lock buttons in the arrow direction shown below and close the cover.**

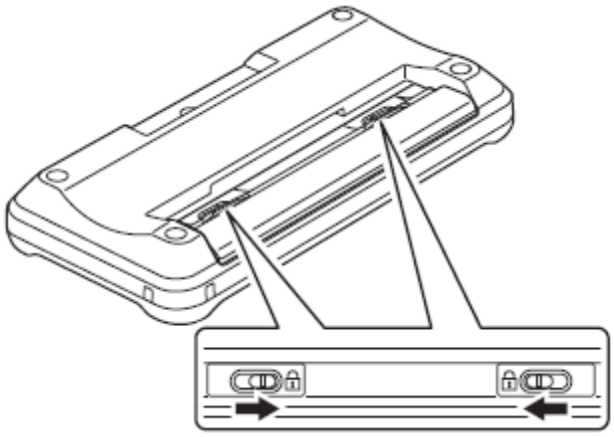

6 **Attach the keyboard belt to back of the keyboard.**

The hook-and-loop fastener should be face down.

DRAFT

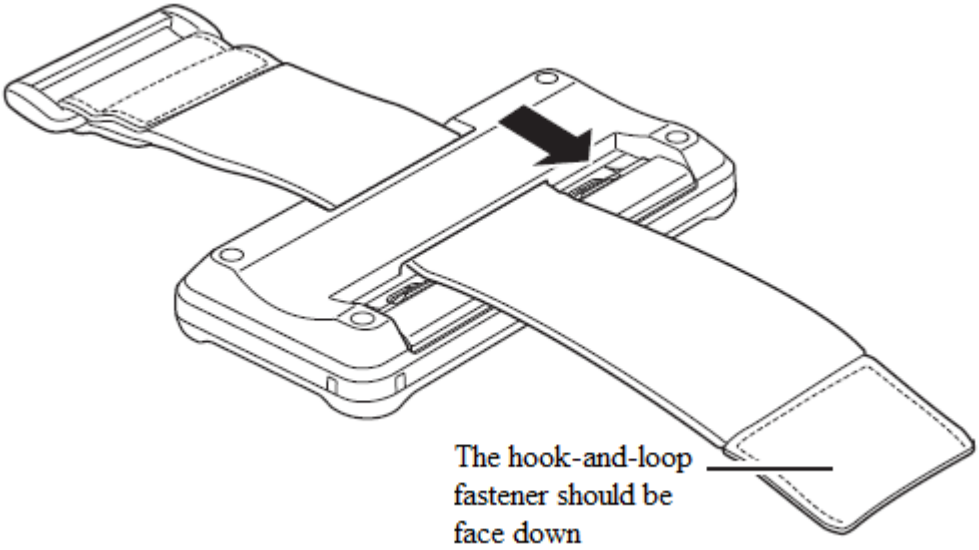

7 **Wear the keyboard on your arm.**

Wrap the keyboard belt around your arm and stick the hook-and-loop fastener.

Tighten the belt so that the keyboard will not fall off.

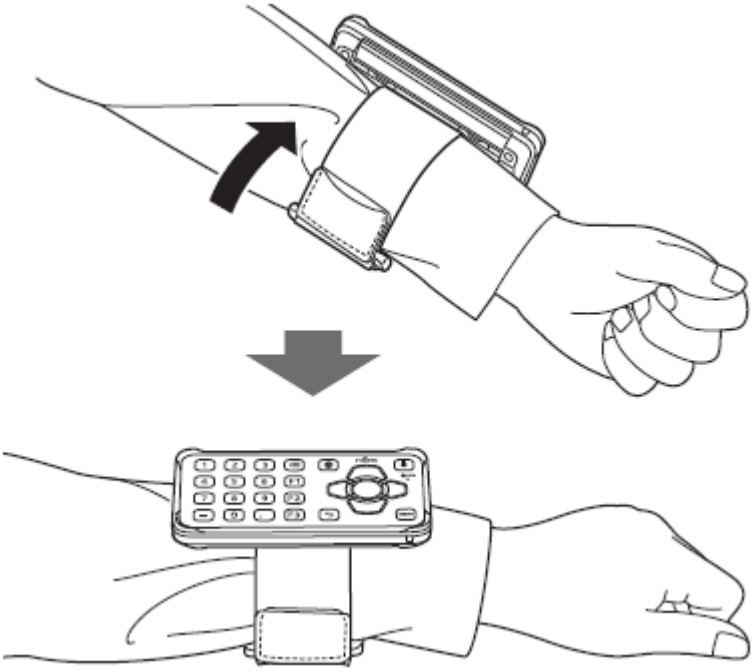

POINT

You may adjust the length of the keyboard belt by the hook-and-loop

fastener shown below.

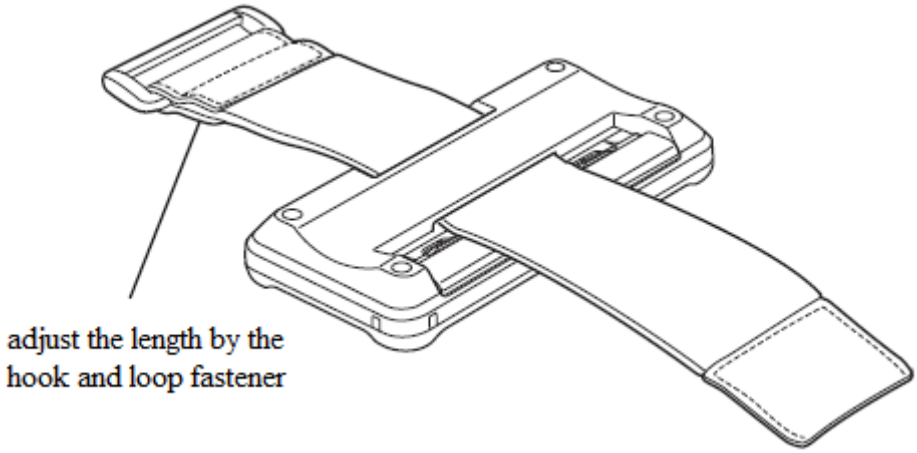

POINT

When changing the batteries for the second time, you don't need to take the keyboard belt off. You can change the batteries as follows.

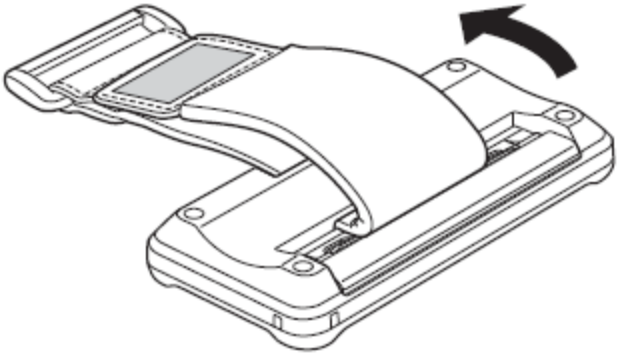

3. Initial settings

Before use, initial setting by the following procedure.

"Adjusting visibility/position" (→P.60)
↓
"Launch "HMD home" screen" (→P.61)
↓
"Decide the orientation of the product" (→P.62)
↓
"Paring(connecting)" (→P.64)

Adjusting visibility/position

1 **Hold down the power button on the product for few seconds**

A screen will be displayed.

2 **Positon the display in front of the eye.**

Adjust the arm of the product so that the display will be about 3cm away from and in front of your eye.

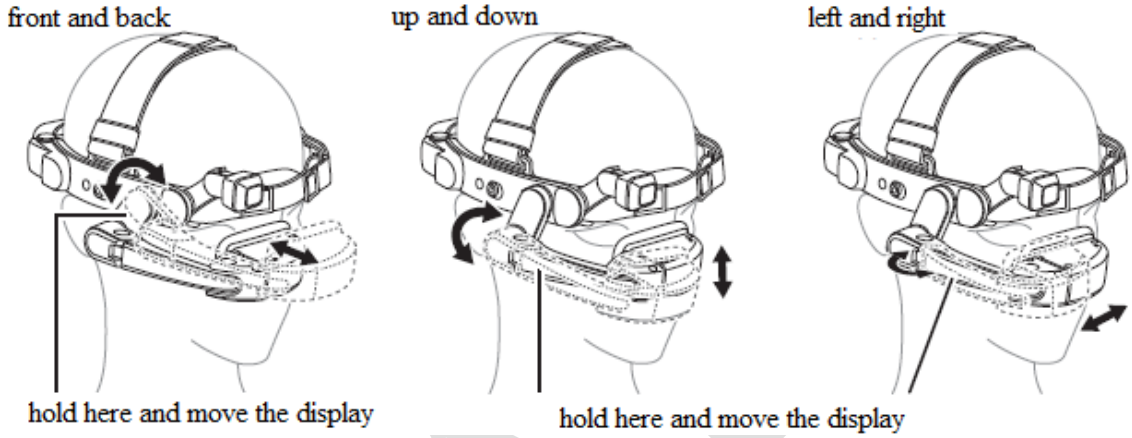

3 **Adjusting visibility**

1. Use your fingertip to pull the indent of the diopter adjustment cap to open.

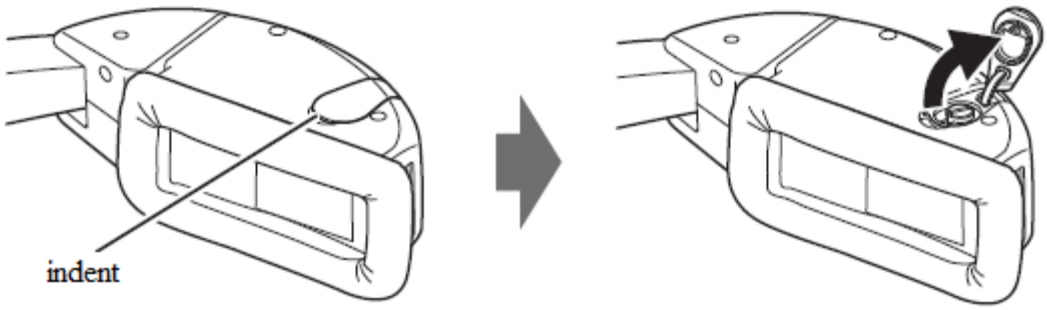

2. Turn the screw for visibility adjustments and adjust the focus of the screen. Put your nail on a slit and turn the screw for visibility adjustments.

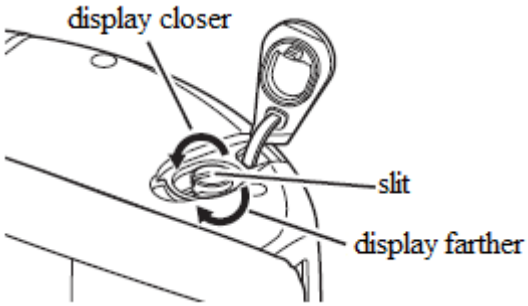

POINT

- If it is hard to adjust the screw while wearing, take the product off from your head.

3. Close the diopter adjustment cap

Launch ”HMD home” screen

1 Select “HMD home” in the screen.

Voice command: “Number one”

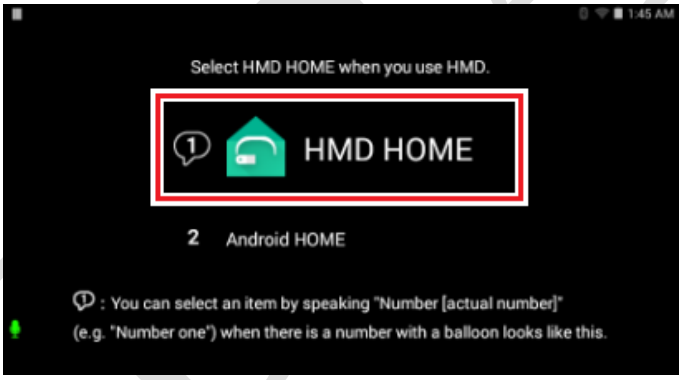

POINT

- You may select an item by speaking "Number [actual number]"(e.g. "Number one") when there is a number with a balloon.
  Please see terminology list of voice commands for words used in voice command. (→P.72)
- If voice command cannot be used, you may use the keyboard.
  In this case, please connect the keyboard to the microUSB cable. Please see “connecting a microUSB cable” for more details. (→P.78)

DRAFT

- This screen will not appear from the second time. If you wish to display this screen, go to “settings”→”other settings”→”home”→”launcher” in “HMD home” screen.
  If you selected “Android home” instead of “HMD home”, this screen will appear again.

“HMD home” screen will appear.

■Menu in ”HMD home” screen

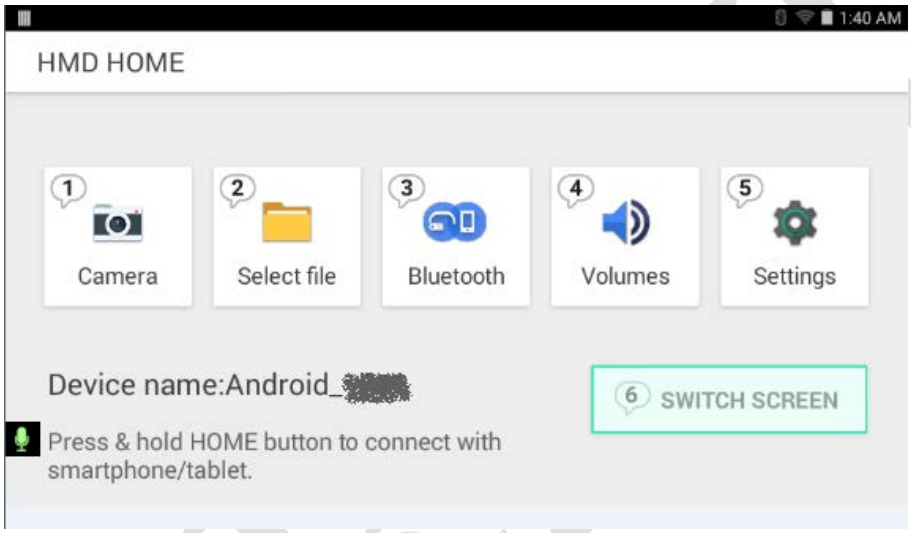

1 Camera: Launch camera on the product
2 Select file: Launch file viewer
3 Bluetooth: connect this product and a smartphone with Bluetooth(HFP)
4 Volumes: set volume for video and notice alarms(→P.70)
5 Settings: brightness of the screen, set left or right eye to see the display, etc. (→P.71)
6 SWITCH SCREEN: switch screen between the product and a smartphone during Miracast.

Decide the orientation of the product

1 **Select “settings” in “HMD home” screen.**
  Voice command: “Number five”

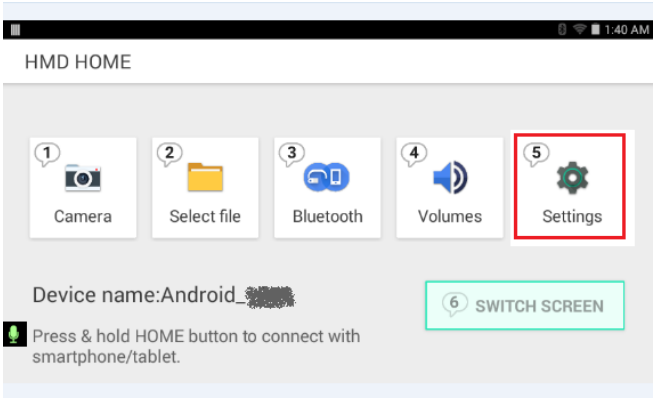

POINT

You may select by using the keyboard if the keyboard is connected.

2 Select "Switch eye"

Voice command: "Number two"

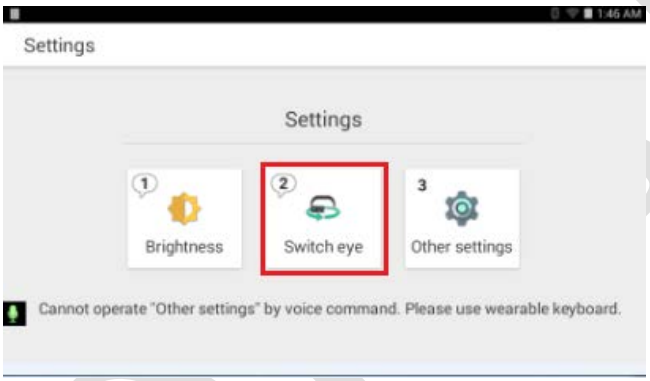

3 Select depending on your situation

Voice command: "Number one", "Number two" or "Number three".
"Automatic" will rotate the screen automatically depending on your situation.

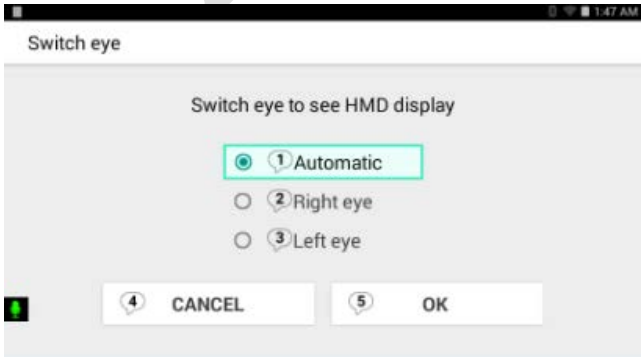

DRAFT

4 Select “OK”

Voice command: “Number five”

Pairing(connecting)

Connect the product to a smartphone and the keyboard.

■Standard configuration

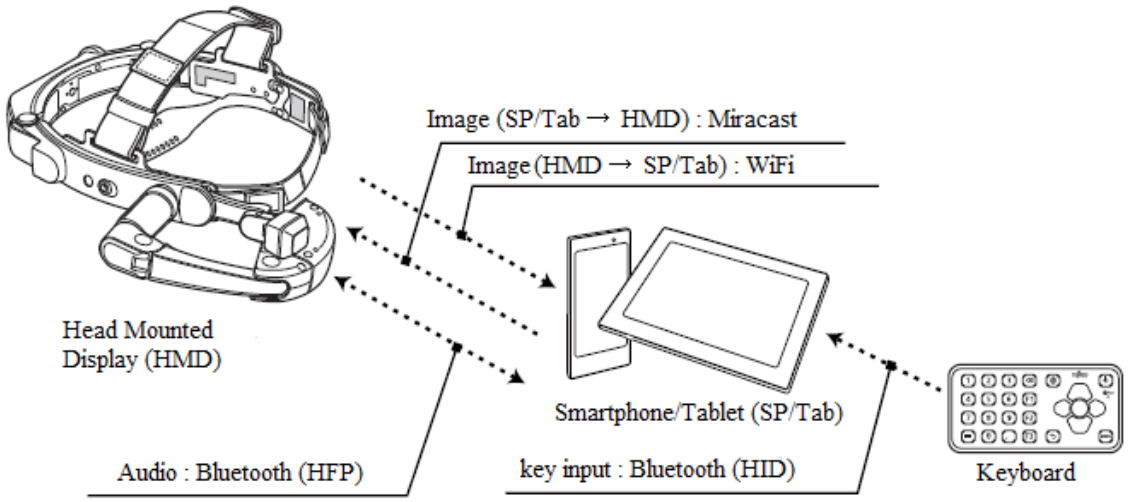

■Connecting the product and a smartphone(Bluetooth)

1 Turn on the smartphone

Hold down the power button.

2 In “HMD home” screen, select “Bluetooth” → “OK”.

Voice command: “Number three” → “Number two”

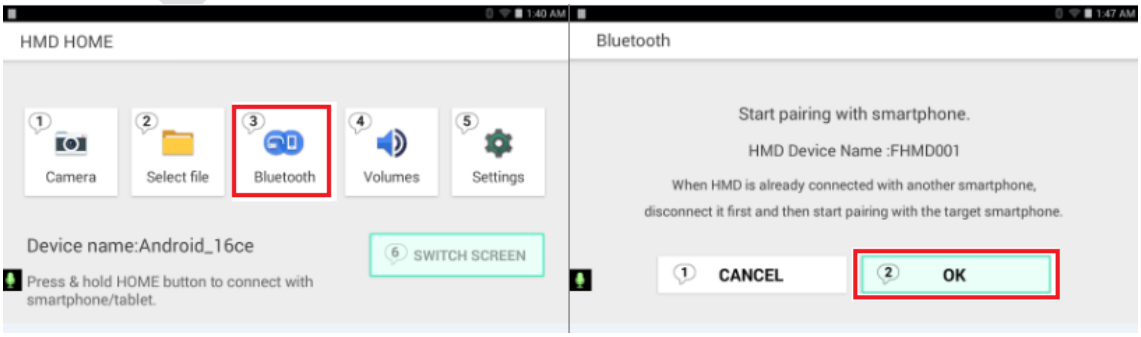

3 Display menu from the home screen of the smartphone and

tap “system settings”.

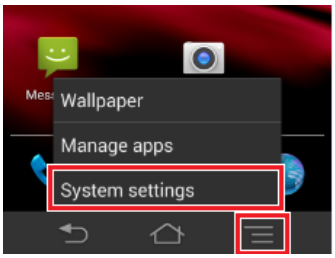

4 Tap “Bluetooth”
Turn “ON” “Bluetooth” if it’s “OFF”.
Wait until the product is recognized.

5 Tap “FHMD001”

6 In “bluetooth pairing request” screen, confirm the passkey is the same as the product and tap “pair”.
Below screen will be displayed on HMD and screen will switch if connected.

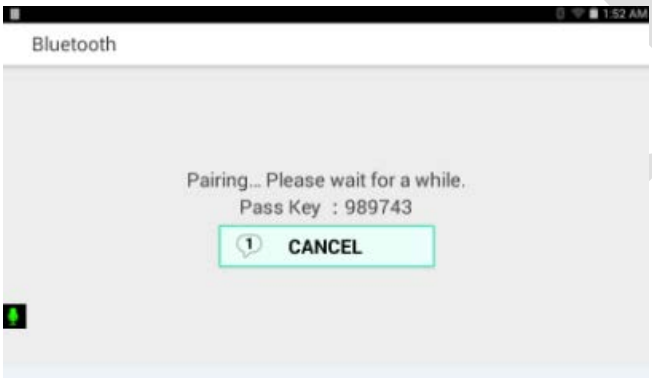

7 Select “OK” on “HMD home” screen.
Voice command: “number one”

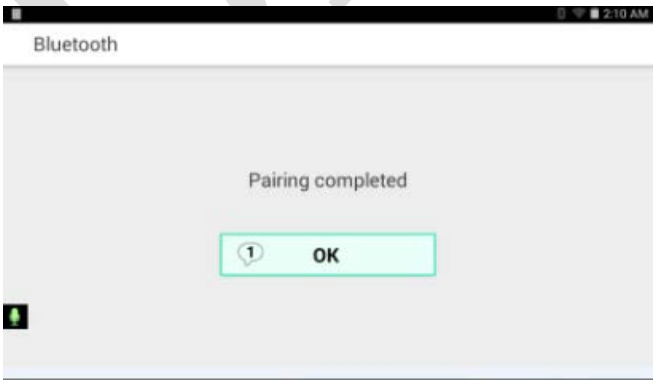

Bluetooth connection is complete.

IMPORTANT

- Supported profile is HFP only.
- The product will not be reconnected automatically to the smartphone once the power is off or the communication is lost, even if the connection became available again. It's necessary to operate from procedure 3 above.

■Connecting the product and a smartphone(Miracast)

1 Hold down the home button until “Waiting for connection from smartphone/tablet” displays on ”HMD home” screen.

2 Turn on the smartphone
Hold down the power button.

3 Display menu from the home screen of the smartphone and tap “system settings”.

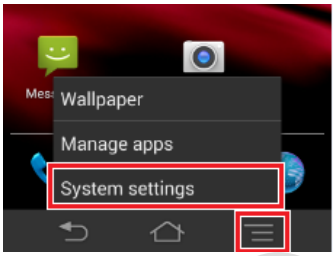

4 Tap “Display” → “Miracast”.
Turn “ON” “Miracast” if it’s “OFF”.

5 Tap the device name.
The device name is displayed in “HMD home” screen.

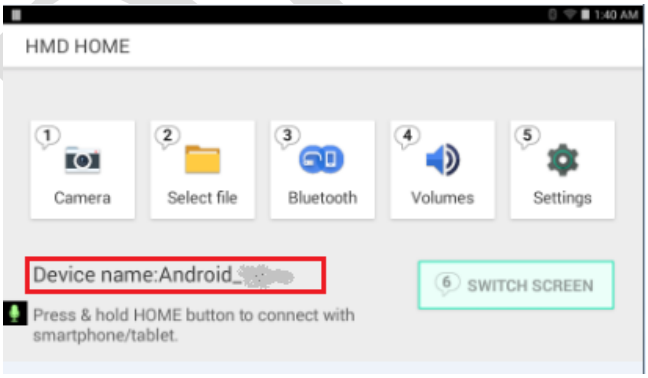

The smartphone screen will change to “connected” and smartphone’s screen will be displayed on the HMD screen.

Miracast connection is complete.

DRAFT

IMPORTANT

- The product will not be reconnected automatically to the smartphone once the power is off or the communication is lost, even if the connection became available again. It's necessary to operate from procedure 3 above.
- Miracast connection uses 2.4GHz band wireless LAN. If you are unable to use 2.4GHz band wireless LAN or has radio wave interference, use microUSB cable for wired connection. See page “Connecting a microUSB cable” for how to connect. (→P.78)

POINT

When the product is connected to a smartphone by using Miracast, the time and date on the product will synchronized to the time and date on the smartphone.

■Connecting the keyboard and a smartphone(Bluetooth)

1 Turn on the keyboard.
Hold down the [Power] key until Bluetooth/power indicator light turns on.

2 Press [Bluetooth] key on the keyboard.
Hold down the key until Bluetooth/power indicator light starts flashing.
It will change to pairing standby state.

3 Display menu from a home screen of the smartphone and tap “system settings”.

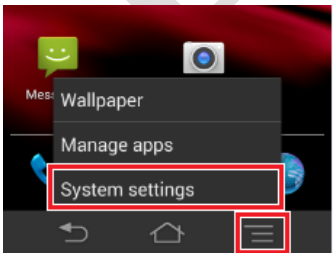

4 Tap “Bluetooth”
Turn “ON” “Bluetooth” if it’s “OFF”.
Wait until the keyboard is recognized.

DRAFT

5 Tap the address of the Bluetooth keyboard.

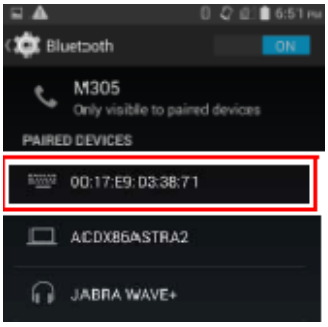

It will say “connected” under the device name.

POINT

Once the keyboard is connected to the smartphone, device name will be shown as “FHMD-WKB****” from the next time.

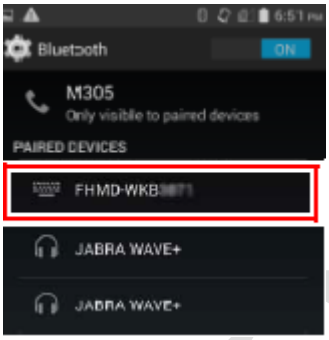

Bluetooth connection is complete.

DRAFT

4. How to use

Turning the power on

The product will not be reconnected automatically to the smartphone once the power is off or the communication is lost, even if the connection became available again. For this reason, reconnection is needed before use.

POINT

- Pairing is only needed during the initial settings.

1 Turn on the product, the smartphone and the keyboard.
2 Display menu from the home screen of the smartphone and tap “system settings”.

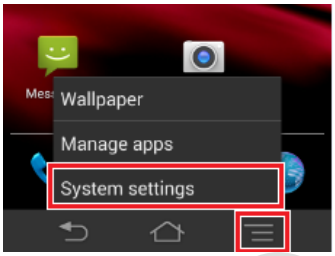

3 Tap “Bluetooth”
Turn “ON” “Bluetooth” if it’s “OFF”.
Wait until the product is recognized.
4 Tap “FHMD001”
5 Tap “pair”.
Bluetooth connection is complete.
6 Tap “system settings” again on the smartphone.

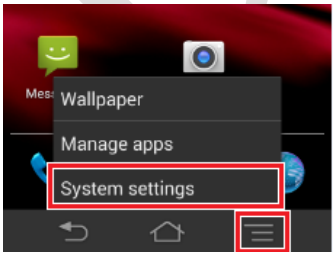

7 Tap “Display” → “Miracast”.
Turn “ON” “Miracast” if it’s “OFF”.
8 Tap the device name.
The device name is displayed in “HMD home” screen.

DRAFT

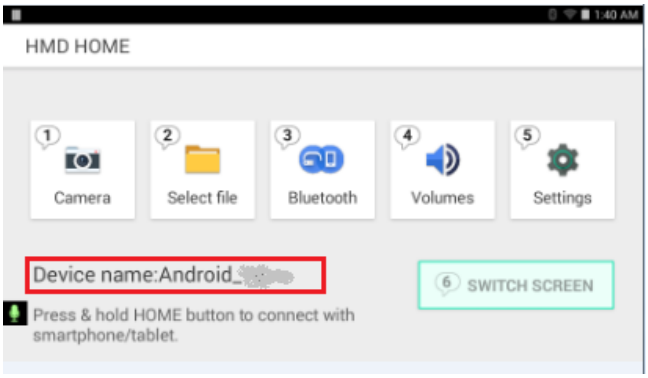

The smartphone screen will change to “connected” and smartphone’s screen will be displayed on the HMD screen. Miracast connection is complete.

Volumes/Brightness settings

■Volume settings

1 **Select “Volumes” in “HMD home” screen.**

Voice command: “Number four”

POINT

You may select by using the keyboard if the keyboard is connected.

2 **Select item and change the volume.**

Select an item by voice command “number one”, “number two” or “number three” and use voice command “Volume up” and ”Volume down” to change the volume.

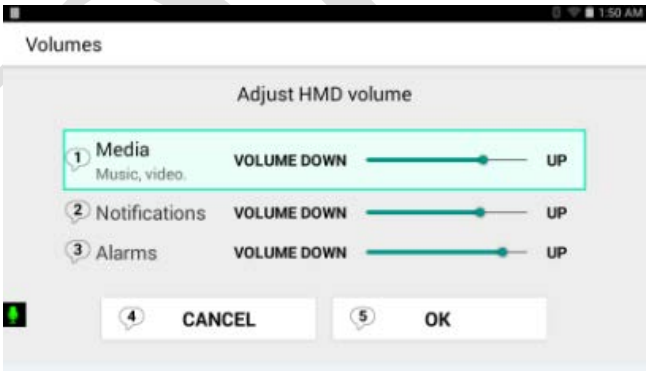

POINT

You may change the volume by pressing left or right key if the keyboard is connected.

DRAFT

3 **Select “OK”.**

Voice command: “Number five”

■Brightness settings

1 **Select “Settings” in “HMD home” screen.**

Voice command: “Number one”

POINT

You may select by using the keyboard if the keyboard is connected.

2 **Select “brightness”**

Voice command: “Number one”

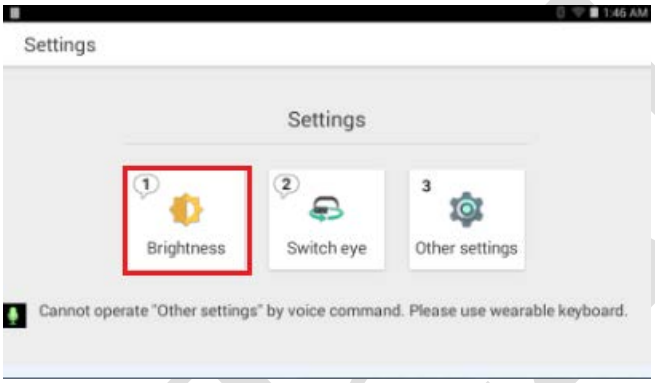

3 **Select item and change the brightness.**

Select an item by voice command “number one”, “number two” or “number three” and use voice command “Dark” and ”Bright” to change the brightness.

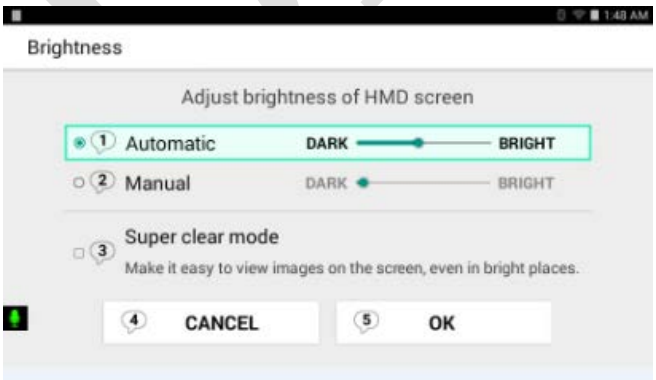

POINT

You may change the brightness by pressing left or right key

if the keyboard is connected.

4 **Select "OK".**

Voice command: "Number five"

Terminology list of voice commands

You may select an item by voice command when there is a balloon displayed on the screen of the product. Please see voice command listed below.

Displayed on the screen	Voice command
1	Number one
2	Number two
3	Number three
4	Number four
5	Number five
6	Number six
7	Number seven
8	Number eight
9	Number nine
0	Number zero
Settings	Settings
Volume down	Volume down
Volume up	Volume up
Dark	Dark
Bright	Bright
Photo	Photo
Video	Video
Stop	Stop
View	View
Help	Help
Zoom out	Zoom out
Zoom in	Zoom in
Fast rewind	Fast rewind
Fast forward	Fast forward
Go Back	Go Back

DRAFT

Cancel	Cancel
OK	OK
Voice command	Voice command
Keyboard operation	Keyboard operation
Switch camera mode	Switch camera mode
Photo resolution	Photo resolution
Video resolution	Video resolution
Location	Location
Storage	Storage
Exit	Exit
Below commands are used in camera	
Yes	Yes
No	No

When a balloon is not displayed on the screen, you may use below voice commands and their functions.

Function	Voice command
Same function as [Back] key on the keyboard	Go Back
Show settings screen	Menu
Move focus up	Up
Move focus down	Down
Move focus, screen or operation of a control bar.	Left
	Right
Activate a function where the cursor is located.	Enter
Below commands are used in File viewer	
Display previous page	Previous
Display next page	Next
End File viewer	Close
Close a file	Close file
Expand the view	Expand
Reduce the view	Reduce
Return to the first page	Top
Go to the last page	Bottom

DRAFT

Android home screen

When this product is booted and "Android home" is chosen instead of “HMD home”, a home screen of Android of this product is displayed.

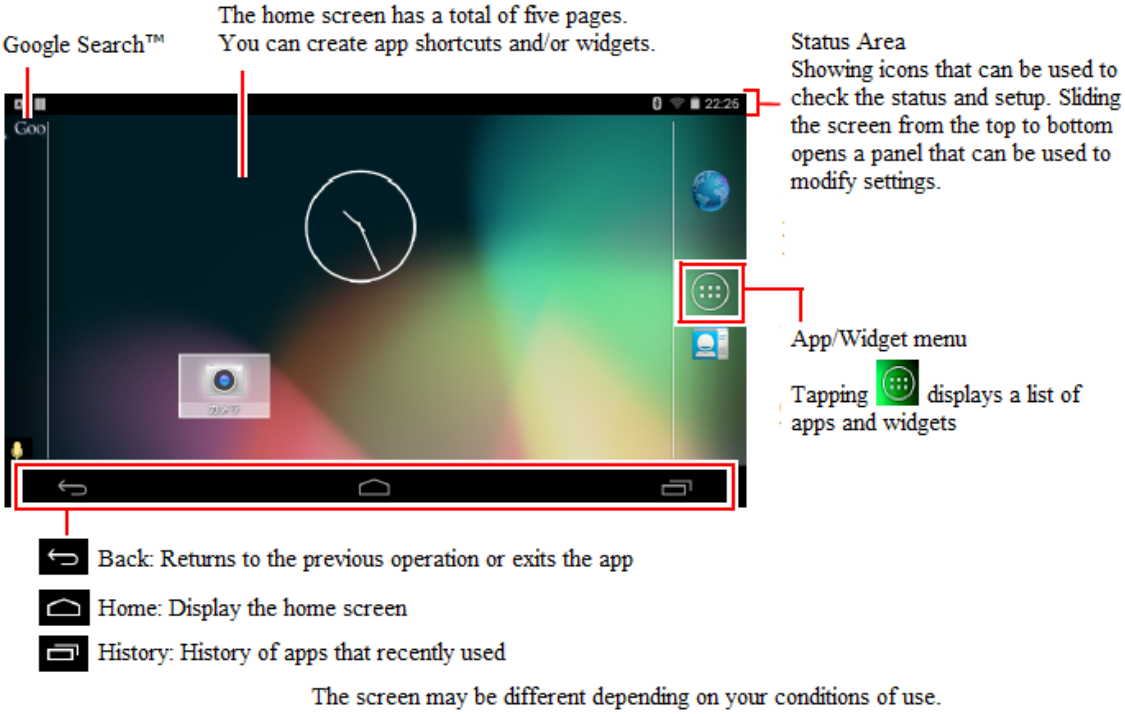

POINT

This is not a smartphone’s home screen.

Moving the display

If you want to move the display from an eye temporarily, move the display up and down/left and right as shown in the next figure.

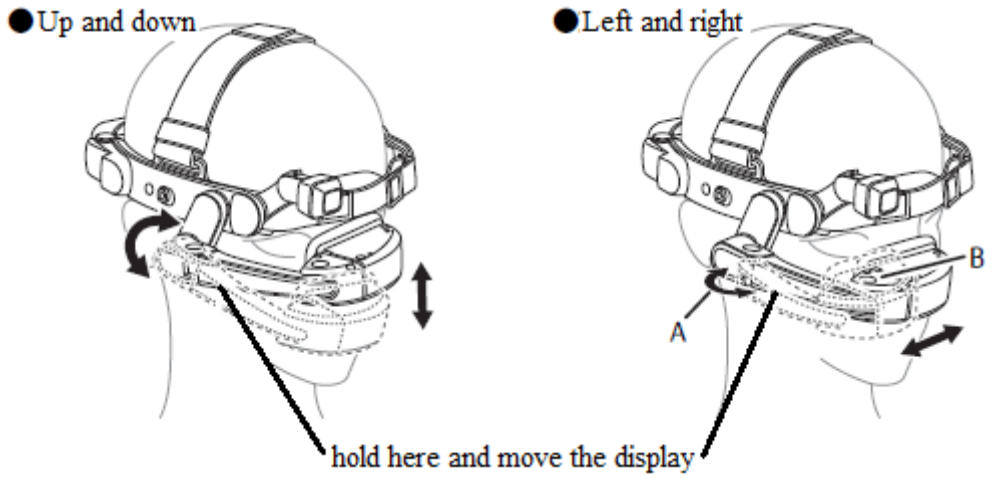

POINT

If you would like to move the display left and right, it's better not to move B but move A since it's more easier to put it back to the original position.

An Indicator light on the keyboard

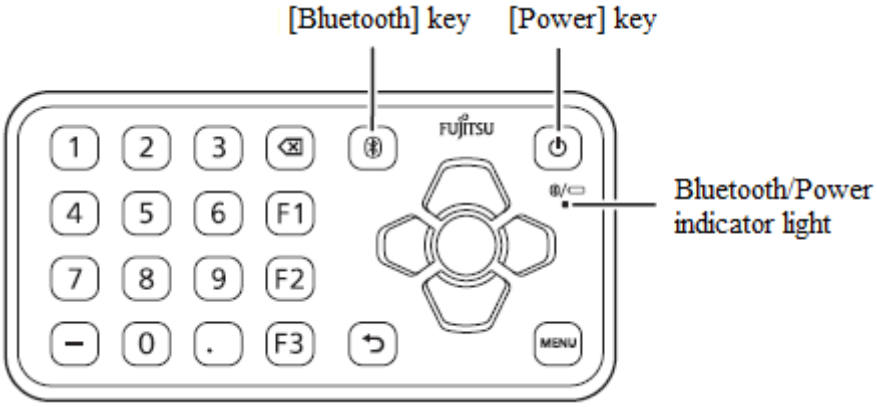

Status of the keyboard	Key operation	Bluetooth/Power indicator light	Status/handling
OFF	Hold down [Power] key (3 sec or more)	Lights red	Low battery or internal error. Turn off the power and change 2 batteries. If this problem continues, please contact your local sales representative
OFF	Hold down [Power] key (3 sec or more)	Lights green (3 sec)	Enough battery
ON	Press [Power] key	Lights orange (3 sec)	Battery is getting low
		Lights red (3 sec)	Almost empty
ON	Press [Power] key or while using the keyboard.	Lights red	Low battery or internal error. Turn off the power and change 2 batteries. If this problem continues, please contact your local sales representative
ON	Hold down [Bluetooth] key (3 sec or more)	Blue light flashing (every second for up to 120 second)	Waiting to pair status. If pairing completes, lights for 5 sec and turns off.
		Lights red	Low battery or internal error. Turn off the power and change 2 batteries. If this problem continues, please contact your local sales representative
ON	Press [Bluetooth] key	Lights blue (5 sec)	Bluetooth connecting
		Light turns off	Bluetooth unconnected

POINT

Please see “Attaching the keyboard” to change the batteries. (→P.55)

DRAFT

microSD card

■Supported microSD cards

type of microSD card	capacity
microSD card	Up to 2GB
microSDHC card	Up to 32GB
microSDHC UHS-I card	Up to 32GB

■Inserting/removing microSD card

1 Use your fingertip to pull the indent of the microSD card slot cap to open.

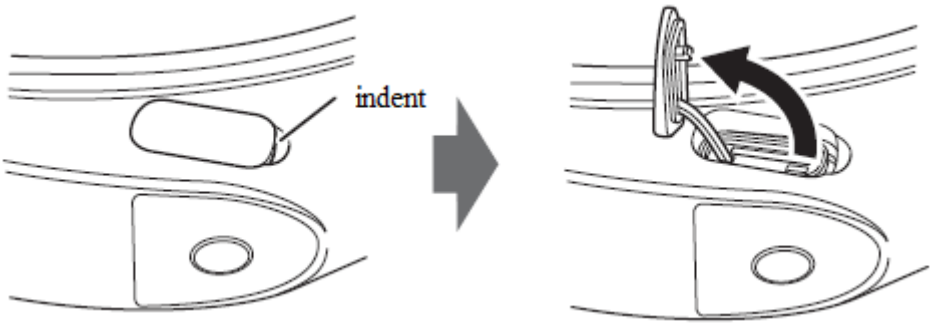

2 Use your fingertip to pull the indent of the microSD card slot cap to open.
Insert a microSD card into the microSD card slot until it clicks.
When removing, push the microSD card lightly and release it, then pull the microSD card straight out.

IMPORTANT

When removing the microSD card, follow the procedure below to unmount it.
On “HMD home” screen: → [Settings] → [Other settings] → [Storage] → [Unmount SD card]

DRAFT

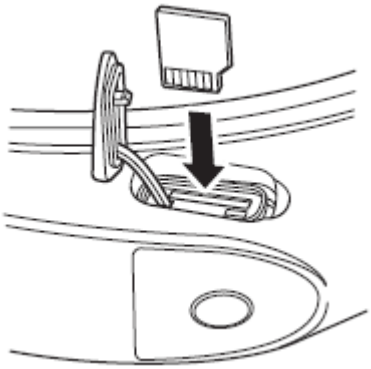

3 **Close the microSD card slot cap.**

Connecting a microUSB cable

This is used when connecting the keyboard or a smartphone directly to the product.

1 Use your fingertip to pull the indent of the microUSB connector cap to open in the direction shown below.

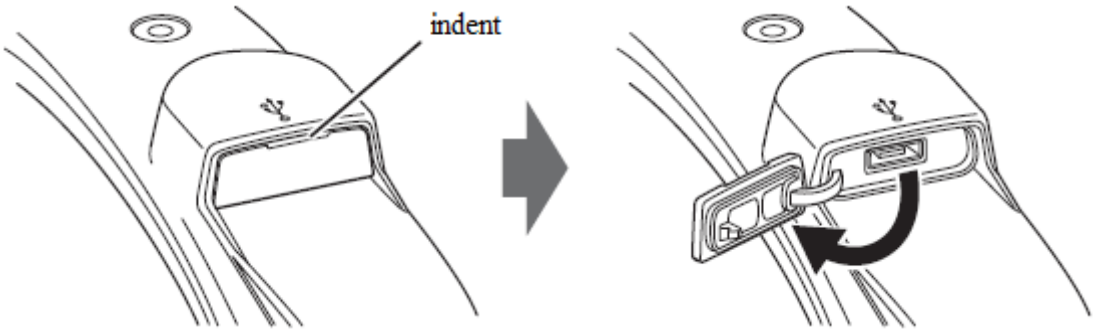

2 Connect attached microUSB cable(TypeA connector) to the microUSB connector.
There are TypeA and TypeB. Please check the engraved letter.

DRAFT

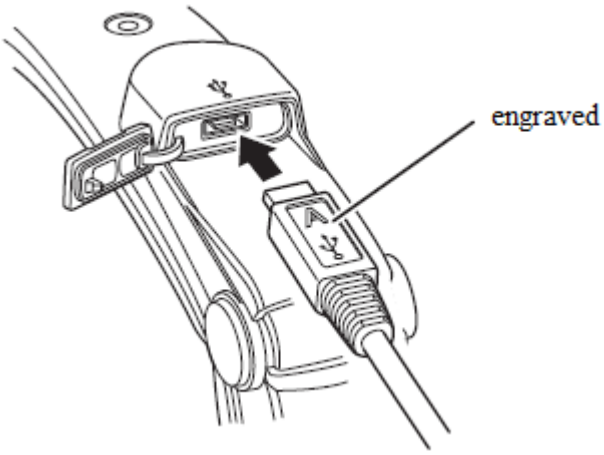

IMPORTANT

Be careful not to connect the microUSB in a wrong direction.
It may damage the connector.

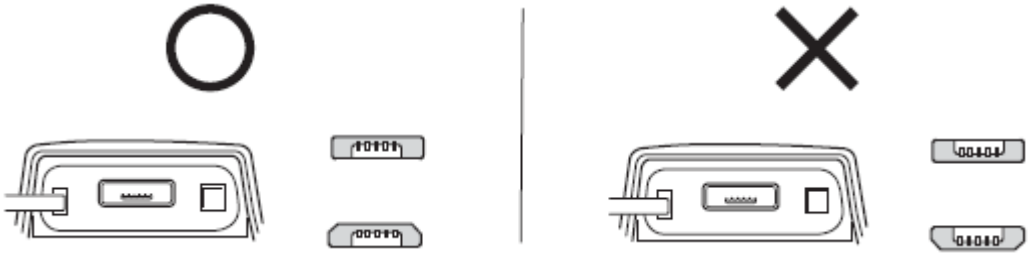

3 Connect the other side of the microUSB cable to the keyboard.
Use your fingertip to pull the indent of the microUSB connector cap to open, insert the microUSB cable in the correct direction.

POINT

If connecting the product and the smartphone using the microUSB cable,

- Turn on the product and the smartphone's power and connect TypeB microUSB cable to the product.
- If the smartphone's screen is not displayed on the screen of the product, remove either side of the cable and insert again.

DRAFT

FCC and IC Regulatory Information

Please note the following regulatory information related to the wireless LAN device.

Regulatory Notes and Statements

Wireless LAN, Health and Authorization for use

Radio frequency electromagnetic energy is emitted from Wireless LAN devices. The energy levels of these emissions, however, are far much less than the electromagnetic energy emissions from wireless devices such as mobile phones. Wireless LAN devices are safe for use by consumers because they operate within the guidelines found in radio frequency safety standards and recommendations. The use of Wireless LAN devices may be restricted in some situations or environments, such as:

- On board an airplane, or
- In an explosive environment, or
- In situations where the interference risk to other devices or services is perceived or identified as harmful.

In cases in which the policy regarding use of Wireless LAN devices in specific environments is not clear (e.g., airports, hospitals, chemical/oil/gas industrial plants, private buildings), obtain authorization to use these devices prior to operating the equipment.

Regulatory Information/Disclaimers

Installation and use of this Wireless LAN device must be in strict accordance with the instructions included in the user documentation provided with the product. Any changes or modifications made to this device that are not expressly approved by the manufacturer may void the user's authority to operate the equipment. The manufacturer is not responsible for any radio or television interference caused by unauthorized modification of this device, or the substitution or attachment of connecting cables and equipment other than those specified by the manufacturer. It is the responsibility of the user to correct any interference caused by such unauthorized modification, substitution or attachment. The manufacturer and its authorized resellers or distributors will assume no liability for any damage or violation of

DRAFT

government regulations arising from failure to comply with these guidelines. This device must not be co-located or operated in conjunction with any other antenna or transmitter.

For IEEE 802.11a Wireless LAN: For operation within 5.15~5.25 GHz frequency range, it is restricted to indoor environments, and the antenna of this device must be integral.

Federal Communications Commission and Industry Canada statement:

This device complies with Part 15 of FCC Rules and Industry Canada license exempt RSS standard(s).

Operation is subject to the following two conditions: (1) This device may not cause interference, and, (2) This device must accept any interference, including interference that may cause undesired operation of this device.

Déclaration d'Industrie Canada

Cet appareil est conforme à la Section 15 des Règles de la FC C et à la (aux) norme(s) RSS concernant les appareils exempt s de licence par Industrie Canada. Son fonctionnement est soumis aux deux condition s suivantes : (1) cet appareil ne doit pas causer d'interférence nuisib le; (2) cet appareil doit accepter toutes les interférences reçues, y compris celles pouvan t causer un mauvais fonctionnement de l'appareil.

FCC Interference Statement

FCC WARNING:

Changes or modifications not expressly approved by the party responsible for compliance could void the user's authority to operate the equipment.

This equipment has been tested and found to comply with the limits for a Class A digital device, pursuant to Part 15 of the FCC Rules. These limits are designed to provide reasonable protection against harmful interference when the equipment is operated in a commercial environment. This equipment generates, uses, and can radiate radio frequency energy. If not installed and used in accordance with the instruction manual, may cause harmful interference to radio communications.

Operation of this equipment in a residential area is likely to cause harmful interference in which case the user will be required to correct the interference at his own expense.

DRAFT

FCC Radio Frequency Exposure statement

The available scientific evidence does not show that any health problems are associated with using low power wireless devices. There is no proof, however, that these low power wireless devices are absolutely safe. Low power wireless devices emit low levels of radio frequency energy (RF) in the microwave range while being used. Whereas high levels of RF can produce health effects (by heating tissue), exposure to low-level RF that does not produce heating effects causes no known adverse health effects. Many studies of low-level RF exposure have not found any biological effects. Some studies have suggested that some biological effects might occur, but such findings have not been confirmed by additional research.

The wireless LAN radio device has been tested and found to comply with FCC radiation exposure limits set forth for an uncontrolled equipment and meets the FCC radio frequency (RF) Exposure Guidelines in Supplement C to OET65.

The exposure standard for wireless devices employs a unit of measurement known as the Specific Absorption Rate, or SAR. The SAR limit set by the FCC is 1.6W/kg, and 1.6W/kg by Industry Canada.

This device is compliant with SAR for general population /uncontrolled exposure limits in ANSI/IEEE C95.1-1992 and Canada RSS 102, and had been tested in accordance with the measurement methods and procedures specified in OET Bulletin 65 Supplement C, and Canada RSS 102. This device has been tested, and meets the FCC, IC RF exposure guidelines when tested with the device operating conditions.

Déclaration de la FCC/d'Industrie Canada sur l'exposition aux radiofréquences

La norme régissant l'exposition des appareils sans fil aux radiofréquences emploie une unité de mesure dénommée Taux d'absorption spécifique, ou TAS. La FCC et Industrie Canada ont défini la même limite de TAS : 1,6 W/kg. Cet appareil est conforme au TAS pour les limites d'exposition générales de la population/non contrôlées définies par les règles C95.1-1992 de l'ANSI/IEEE et RSS 102 d'Industrie Canada ; il a été testé en conformité avec les méthodes et procédures de mesure spécifiées dans le supplément C du bulletin 65 de l'OET (Office d'ingénierie et de technologie) et la règle RSS 102 d'Industrie Canada. Cet appareil a été testé selon les directives de la

DRAFT

FCC et d'IC concernant l'exposition aux radiofréquences et s'est révélé conforme à ces dernières lorsqu'il a été testé en contact direct avec le corps.

Export restrictions

This product or software contains encryption code which may not be exported or transferred from the US or Canada without an approved US Department of Commerce export license. This device complies with Part 15 class A of FCC Rules., as well as ICES 003 ~~B~~ A / NMB 003 ~~B~~ A. Operation is subject to the following two conditions: (1) this device may not cause harmful interference, and (2) this device must accept any interference received, including interference that may cause undesirable operation. Modifications not expressly authorized by Fujitsu America, Inc. may invalidate the user's right to operate this equipment.

Restrictions à l'exportation

Ce produit ou logiciel contient du code de chiffrement qui ne peut être exporté ou transféré des États-Unis ou au Canada sans une licence d'exportation département américain du Commerce a approuvé. Cet appareil est conforme à la partie 15 class A des règles de la FCC., Ainsi que CIEM 003 A / NMB 003 A. Son fonctionnement est soumis aux deux conditions suivantes: (1) ce dispositif ne peut pas causer nuisibles interférences, et (2) cet appareil doit accepter toute interférence reçue, y compris les interférences qui peuvent provoquer un fonctionnement indésirable. Les modifications non expressément autorisés par Fujitsu America, Inc. peut annuler le droit de l'utilisateur à utiliser cet équipement.

Canadian Notice

The device for the 5150 - 5250 MHz band is only for indoor usage to reduce the potential for harmful interference to co-channel mobile satellite systems. The maximum antenna gain of 6 dBi permitted (for devices in the 5250 - 5350 MHz, 5470 - 5725 MHz and 5725 - 5825 MHz bands) to comply with the e.i.r.p. limit as stated in A9.2 of RSS210.

In addition, users are cautioned to take note that high power radars are allocated as primary users (meaning they have priority) of 5250 - 5350 MHz and 5650 - 5850 MHz and these radars could cause interference and/or damage to LE-LAN devices.

DRAFT

Avis pour le Canada

Le matériel destiné à un usage sur la bande 5 150 - 5 250 MHz doit être utilisé uniquement à l'intérieur afin de réduire les risques de brouillage nuisible causé aux systèmes mobiles par satellite fonctionnant sur un même canal.

Un gain d'antenne de 6 dBi est autorisé (pour le matériel utilisant les bandes 5 250 - 5 350 MHz, 5 470 - 5 725 MHz et 5 725 - 5 825 MHz), conformément à la limite p.i.r.e. maximale permise selon l'annexe A9.2 afférent aux périphériques RSS210.

En outre, les utilisateurs doivent prendre garde au fait que les radars de grande puissance sont considérés comme des utilisateurs principaux (ce qui signifie qu'ils sont prioritaires) des bandes 5 250 - 5 350 MHz et 5 650 - 5 850 MHz et qu'ils pourraient causer des interférences et/ou des dommages aux appareils de réseau exempts de licence.

DRAFT

5. Appendix

The motion space of a display

The display can be moved in the following range.

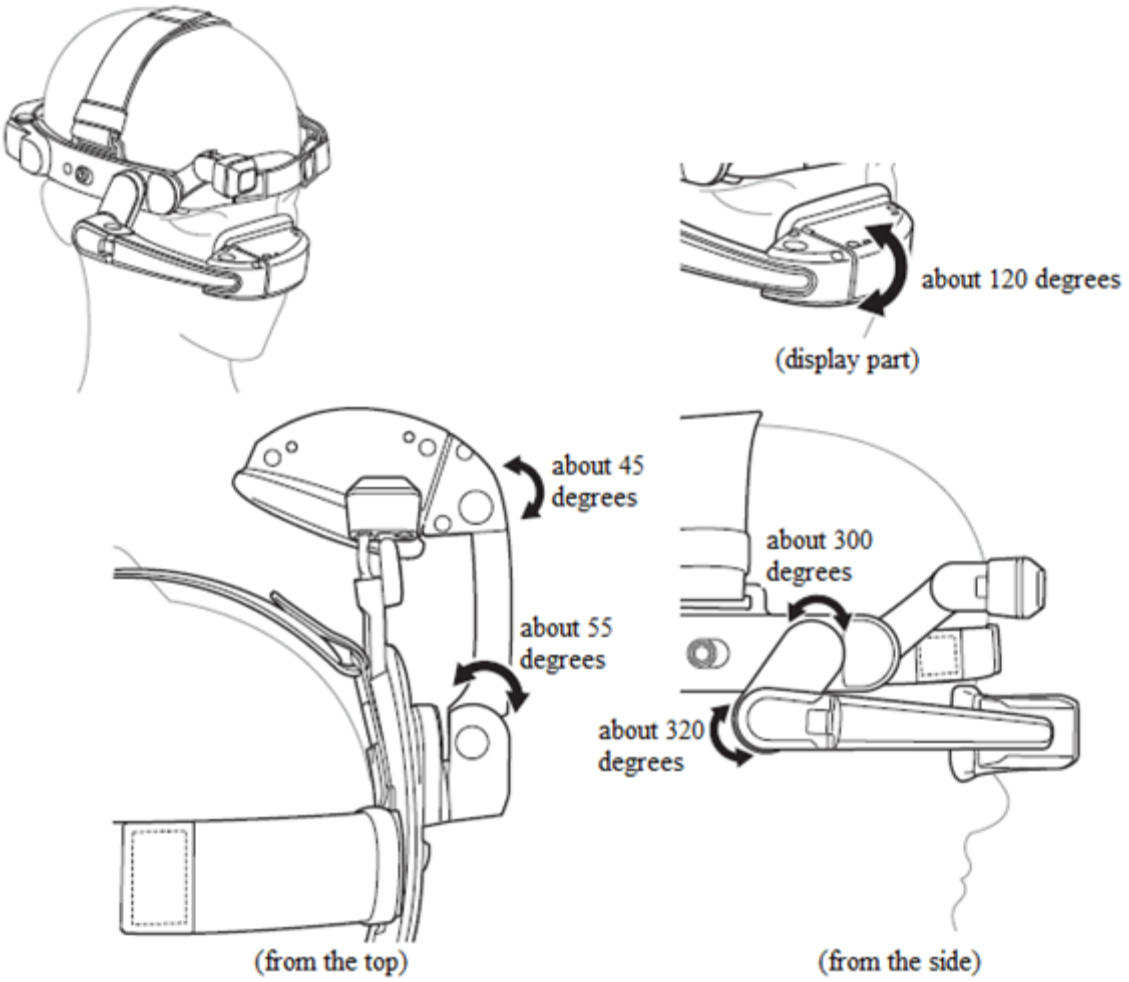

The motion space of a camera

■Camera arm

There are three levels of height. You may adjust to 0 degree, about 20 degrees or about 40 degrees.

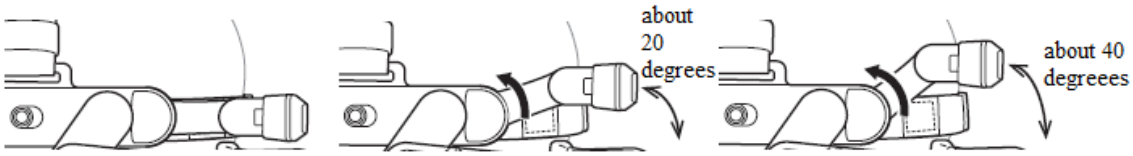

■Camera tip

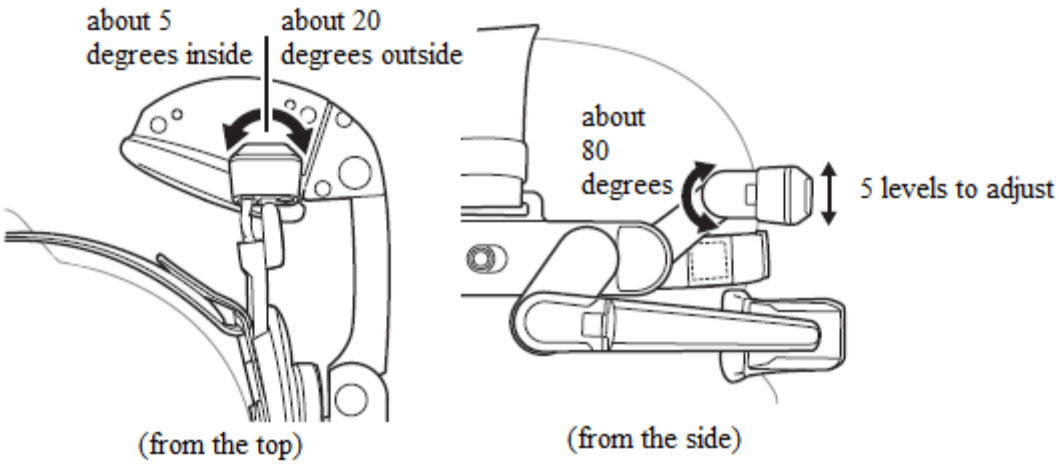

Specification

■Head Mounted Display

Product name		Head Mounted Display
OS		Android4.4.4
CPU		1.2GHz Quad Core CPU(APQ8026)
Memory(RAM/ROM)		2GB/8GB
Display	Size	0.4 inches
	Virtual screen size	11 inches(Virtual viewing distance is 609.6mm)
	Resolution	854 x 480(FWVGA)
	Number of colors	24 bit color(Approx. 16,770,000 colors)
	Visibility adjustment	+1～-2D
	Luminance(min～max)	10～1200cd/㎡
	Distance from an eye	30.8mm
Audio	Speaker	Mono speaker
	Microphone	built-in microphone
camera		Approx. 8.1M effective pixels
Communication function	Wireless LAN	IEEE802.11 a/b/g/n(single), 2.4GHz/5GHz
	Bluetooth	Bluetooth V3.0

DRAFT

Interface	microSD card slot	×1 slot
	Audio	Headset connection terminal 3.5φ x1
	microUSB connector	×1(TypeAB)
Water proofing, dust proofing		IPX5 / IPX7, IP5X
Battery capacity	Battery pack	Lithium ion 3,300mAh
Battery life (when using an application that is connected with Wi-Fi Miracast)		Approx. 4 hours *1
Temperature and humidity conditions		Temperature: 5 to 35°C/Humidity: 20 to 80% RH(no condensation)
Chemical resistance		Chemical resistance (ethanol, IPA, sodium hypochlorite)*2
Dimensions (W×D×H) (This is a reference since the shape is variable. Values are approx.) 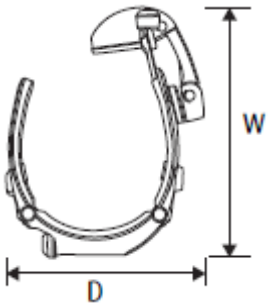 		- MIN(arm fold) W×D×H = 290mm × 180mm × 60mm - MAX(arm extended) W×D×H = 400mm × 350mm × 37mm
Weight (Values are approx.)		・HMD：315g ・Fitting belt：70g ・knurled screws：4g (4 pcs) ・display cushion：4g ・helmet clips：45g (2 pcs)

*1: Based on Fujitsu measurement standards. May differ according to usage environment.

*2: Assumed using an anti-bacterial sheet. This test does not guarantee that a chemical will not cause discoloration, paint peeling, deformation, etc.

DRAFT

■Wearable Keyboard

Product name		Wearable Keyboard
Connection modes		Bluetooth®Wireless/USB Wired
Communication function	Bluetooth	Bluetooth V3.0
Interface	microUSB connector	×1(TypeB)
Water proofing, dust proofing		IPX5 / IPX7, IP5X
Battery	AAA alkaline battery	×2
Battery life (when using AAA alkaline batteries)		Approx. 5 months *
Dimensions (W×D×H) (Not containing protrusion)		W×D×H = 135mm × 68mm × 20mm
Weight (Values are approx.)		・Body：95g (without batteries and a belt) ・Keyboard belt：26g

*: Based on Fujitsu measurement standards. May differ according to usage environment.

DRAFT