EMC Technologies Report Number: M050103_Cert_Eton_Cal2_BT

APPENDIX P
USER MANUAL – PART 2

5 Troubleshooting

Troubleshooting

Your Fujitsu LifeBook notebook is sturdy and subject to few problems in the field. However, you may encounter simple setup or operating problems that you can solve on the spot, or problems with peripheral devices, that you can solve by replacing the device. The information in this section helps you isolate and resolve some of these straightforward problems and identify failures that require service.

IDENTIFYING THE PROBLEM

If you encounter a problem, go through the following procedure before pursuing complex troubleshooting:

1. Turn off your LifeBook notebook.
2. Make sure the AC adapter is plugged into your notebook and to an active AC power source.
3. Make sure that any card installed in the PC Card slot is seated properly. You can also remove the card from the slot, thus eliminating it as a possible cause of failure.
4. Make sure that any devices connected to the external connectors are plugged in properly. You can also disconnect such devices, thus eliminating them as possible causes of failure.
5. Turn on your notebook. Make sure it has been off at least 10 seconds before you turn it back on.
6. Go through the boot sequence.
7. If the problem has not been resolved, refer to the Troubleshooting Table, that follows, for more detailed troubleshooting information.

If you keep notes about what you have tried, your support representative may be able to help you more quickly by giving additional suggestions over the phone.

8. If you have tried the solutions suggested in the Troubleshooting Table without success, contact your support representative:

   Toll free: 1-800-8Fujitsu (1-800-838-5487)
   E-mail: 8fujitsu@us.fujitsu.com
   Web site: us.fujitsu.com/computers.

Before you place the call, you should have the following information ready so that the customer support representative can provide you with the fastest possible solution:

- Product name
- Product configuration number
- Product serial number
- Purchase date
- Conditions under which the problem occurred
- Any error messages that have occurred
- Hardware configuration
- Type of device connected, if any

See the Configuration Label on the bottom of your notebook for configuration and serial numbers. *(See figure 2-7 on page 10 for location)*

SPECIFIC PROBLEMS

Using the Troubleshooting Table

When you have problems with your LifeBook notebook, try to find the symptoms under the Problem column of the troubleshooting table for the feature giving you difficulty. You will find a description of common causes for that symptom under the column Possible Cause and what, if anything, you can do to correct the condition under Possible Solutions. All possible causes or solutions may not apply to your notebook.

TROUBLESHOOTING TABLE

Problem	Page
Audio Problems	page 56
DVD/CD-ROM Drive Problems	page 56
Port Replicator Problems	page 57
Floppy Disk Drive Problems	page 57
Hard Drive Problems	page 57
Keyboard or Mouse Problems	page 58
Memory Problems	page 58
Modem Problems	page 58
Parallel, Serial and USB Device Problems	page 58
PC Card Problems	page 59
Power Failures	page 59
Shutdown and Startup Problems	page 61
Video Problems	page 62
Miscellaneous Problems	page 63

Problem	Possible Cause	Possible Solutions
Audio Problems		
There is no sound coming from the built-in speakers.	The volume is turned too low.	Adjust the volume control on your notebook.
	The software volume control is set too low.	Adjust the sound volume control settings in your software, operating system and applications.
	Headphones are plugged into your notebook.	Plugging in headphones disables the built-in speakers, remove the headphones.
	BIOS audio settings are incorrect.	Set the BIOS setup utility to the default values within the Multimedia Device Configuration menu. *(See BIOS Setup Utility on page 29 for more information)*
	Software driver is not configured correctly.	Refer to your application and operating system documentation for help.
	The speakers have been muted using the Volume icon in the system tray.	Click on the Volume icon in the tool tray on the bottom right of the screen. (It looks like a speaker). If the Mute box is checked, click on it to uncheck it.
DVD/CD-RW/CD-ROM Drive Problems		
LifeBook notebook fails to recognize DVD/CD-RW/ CD-ROM's.	Protective sheet is still in the DVD/CD-RW/CD-ROM drive tray.	Replace DVD/CD-RW/CD-ROM in tray.
	DVD/CD-RW/CD-ROM is not pushed down onto raised center circle of the drive.	Open DVD/CD-RW/CD-ROM tray and re-install DVD/CD-RW/CD-ROM properly.
	DVD/CD-RW/CD-ROM tray is not latched shut.	Push on the front of the DVD/CD-RW/CD-ROM tray until it latches.
	Incorrect DVD Player or no DVD Player software is installed.	Install DVD Player software. *(See "Media Player Software" on page 39 for more information.)*
	Wrong drive designator was used for DVD/CD-RW/CD-ROM in the application.	Verify the drive designator used by the application is the same as the one used by the operating system. When the operating system is booted from a DVD/ CD, drive designations are automatically adjusted. Note that the drive designation can be changed with the Disk Management tool located at Administrative Tools -> Computer Managenment.

Problem	Possible Cause	Possible Solutions
LifeBook notebook fails to recognize DVD/CD-RW/CD-ROM's (continued)	Windows DVD/CD-RW/CD-ROM auto insertion function is disabled.	Start the DVD/CD-RW/CD-ROM from the desktop or application software or re-enable the Windows DVD/CD-RW/CD-ROM auto insertion function.
LifeBook notebook fails to recognize DVD/CD-RW/CD-ROM's.	DVD/CD-RW/CD-ROM is dirty or defective.	Wipe DVD/CD-RW/CD-ROM with a non-abrasive CD cleaning cloth and reinsert. It if still will not work try another DVD/CD-RW/CD-ROM in the drive.
The DVD/CD-RW/CD-ROM Access indicator on the Status Indicator Panel blinks at regular intervals when no DVD/CD-RW/CD-ROM is in the tray or the DVD/CD-RW/CD-ROM drive is not installed.	The Windows DVD/CD-RW/CD-ROM auto insertion function is active and is checking to see if a DVD/CD-RW/CD-ROM is ready to run.	This is normal. However, you may disable this feature.
Port Replicator Problems		
Note: Be sure to power down your LifeBook notebook before adding a printer to the Port Replicator parallel port.		
LifeBook notebook does not turn on when installed in the optional Port Replicator	Port Replicator AC adapter is not plugged in.	Provide power to the Port Replicator.
	Notebook is not properly seated in the Port Replicator.	Remove and re-dock your LifeBook notebook.
Floppy Disk Drive Problems		
You cannot access your floppy disk.	You tried to write to a write protected floppy disk.	Eject the floppy disk and set it to write enable. *(See Preparing a Disk for Use on page 42 for more information)*
	Floppy disk is not loaded correctly.	Eject floppy disk, check orientation and re-insert. *(See Ejecting a Disk on page 42 for more information)*
	The floppy disk drive may not be properly installed.	Remove and re-install your floppy disk drive.
	Security is set to protect access to floppy disk data.	Verify your password and security settings.
Hard Drive Problems		
You cannot access your hard drive.	The setup utility is incorrectly set for your internal (Primary Master) or optional second hard drive (Primary Slave).	Revise BIOS settings to set both Primary Master and Primary Slave correctly. *(See BIOS Setup Utility on page 29 for more information)*
	The wrong drive designator was used by an application when a bootable CD-ROM was used to start the notebook.	Verify drive designator used by application is in use by the operating system. When the operating system is booted from a CD, drive designations are automatically adjusted.
	Security is set so your operating system cannot be started without a password.	Verify your password and security settings.

Problem	Possible Cause	Possible Solutions
Keyboard or Mouse Problems		
The built-in keyboard does not seem to work.	The notebook has gone into Suspend mode.	Push the **Power/Suspend/Resume** button.
	Your application has locked out your keyboard.	Try to use your integrated pointing device to restart your system.
You have installed an external keyboard or mouse, and it does not seem to work.	Your external device is not properly installed.	Re-install your device. *(See Device Ports on page 50 for more information)*
	Your operating system software is not setup with the correct software driver for that device.	Check your device and operating system documentation and activate the proper driver.
	Your mouse or keyboard is connected to the wrong PS/2 port on the optional Port Replicator.	Plug the mouse into the PS/2 Mouse port and the external keyboard or numeric key pad into the PS/2 Keyboard port. *(See PS/2 Port on page 51 for more information)*
You have connected an external keyboard or a mouse and it seems to be locking up the system.	Your operating system software is not setup with the correct software driver for that device.	Check your device and operating system documentation and activate the proper driver.
	Your system has crashed.	Try to restart your notebook. I
Memory Problems		
Your Power On screen, or Main menu of the BIOS setup utility information, does not show the correct amount of installed memory.	Your memory upgrade module is not properly installed.	Remove and re-install your memory upgrade module. *(See Memory Upgrade Module on page 45 for more information)*
	You have a memory failure.	Check for Power On Self Test (POST) messages. *(See Power On Self Test Messages on page 64 for more information)*
Modem Problems		
Messages about modem operation.	Messages about modem operation are generated by whichever modem application is in use.	See your application software documentation for additional information.
Parallel, Serial, and USB Device Problems		
You have installed a parallel port device, a serial port device or a USB device. Your LifeBook notebook does not recognize the device, or the device does not seem to work properly.	The device is not properly installed.	Remove and re-install the device. *(See Device Ports on page 50 for more information)*
	The device may have been installed while an application was running, so your notebook is not aware of its installation.	Close the application and restart your notebook.
	Your device may not have the correct software driver active.	See your software documentation and activate the correct driver.
	You may have the wrong I/O address selected for your device.	See your device documentation and software documentation to determine the required I/O address. Change the settings in the BIOS setup utility. *(See BIOS Setup Utility on page 29 for more information)*

Problem	Possible Cause	Possible Solutions
You have installed a parallel port device, a serial port device or a USB device. Your LifeBook notebook does not recognize the device, or the device does not seem to work properly. (continued)	Your device and another device are assigned the same I/O address.	Check all I/O addresses located within the BIOS setup utility and any other installed hardware or software to make sure there are no duplications.
	Parallel port is set to output only.	Check parallel port setting in the BIOS and set to bi-directional or ECP.
PC Card Problems		
A card inserted in the PC Card slot does not work or is locking up the system.	The card is not properly installed.	Remove and re-install the card. *(See PC Cards on page 43 for more information)*
	The card may have been installed while an application was running, so your notebook is not aware of its installation.	Close the application and restart your notebook.
	Your software may not have the correct software driver active.	See your software documentation and activate the correct driver.
	You may have the wrong I/O address selected for your PC Card device.	See your PC Card documentation to determine the required I/O address. Change the settings in the BIOS. *(See BIOS Setup Utility on page 29 for more information)*
	Your PC Card device and another device are assigned the same I/O address.	Check all I/O addresses located within the BIOS setup utility and any other installed hardware or software to make sure there are no duplications.
Power Failures		
You turn on your LifeBook notebook and nothing seems to happen.	The installed primary battery is completely discharged, there is no optional second battery installed or there is no Power adapter (AC or Auto/Airline) installed.	Check the Status Indicator Panel to determine the presence and condition of the batteries. *(See Status Indicator Panel on page 11 for more information)* Install a charged battery or a Power adapter.
	The primary battery is installed but is faulty.	Use the Status Indicator panel to verify the presence and condition of the batteries. *(See Status Indicator Panel on page 11 for more information)* If a battery is indicating a short, remove that battery and operate from another power source or replace that battery.
	The battery or batteries are low.	Check the Status Indicator Panel to determine the presence and condition of the batteries. *(See Status Indicator Panel on page 11 for more information)* Use a Power adapter to operate until a battery is charged or install a charged battery.
	The power adapter (AC or auto/airline) is not plugged in properly.	Verify that your adapter is connected correctly. *(See Power Sources on page 27 for more information)*

Problem	Possible Cause	Possible Solutions
You turn on your LifeBook notebook and nothing seems to happen. (continued)	The Power adapter (AC or auto/airline) has no power from the AC outlet, airplane seat jack, or the car's cigarette lighter.	Move the AC cord to a different outlet, check for a line switch or tripped circuit breaker for the AC outlet. If you are using an auto/airline adapter in a car make sure the ignition switch is in the On or Accessories position.
	The Power adapter (AC or auto/airline) is faulty.	Try a different Power adapter or install a charged optional second battery.
Your LifeBook notebook turns off all by itself.	The power management parameters are set for auto timeouts which are too short for your operating needs.	Press any button on the keyboard, or move the mouse to restore operation. If that fails, push the Power/Suspend/Resume button. Check your power management settings, or close your applications and go to the Power Savings menu of the setup utility to adjust the timeout values to better suit your needs.
	You are operating on battery power only and have ignored a low battery alarm until the batteries are all at the dead battery state and your machine has gone into Dead Battery Suspend mode.	Install a power adapter and then push the Power/Suspend/Resume button. *(See Power Sources on page 27 for more information)*
	You have a battery failure.	Verify the condition of the batteries using the Status Indicator panel, and replace or remove any batteries that are shorted. *(See Status Indicator Panel on page 11 for more information)*
	Your power adapter has failed or lost its power source.	Make sure the adapter is plugged in and the outlet has power.
Your LifeBook notebook will not work on battery alone.	The installed batteries are dead.	Replace the battery with a charged one or install a Power adapter.
	No batteries are installed.	Install a charged battery.
	The batteries are improperly installed.	Verify that the batteries are properly connected by re-installing them.
	Your installed batteries are faulty.	Verify the condition of the batteries using the Status Indicator panel and replace or remove any batteries that are shorted. *(See Status Indicator Panel on page 11 for more information)*
The batteries seem to discharge too quickly.	You are running an application that uses a great deal of power due to frequent hard drive access or DVD/CD-ROM access, use of a modem card or a LAN PC card.	Use both the primary battery and an optional second battery and/or use a power adapter for this application when at all possible.
	The power savings features may be disabled.	Check the power management and/or setup utility settings in the Power Savings menu and adjust according to your operating needs.
	The brightness is turned all the way up.	Turn down the brightness adjustment. The higher the brightness the more power your display uses.
	The batteries are very old.	Replace the batteries.

Problem	Possible Cause	Possible Solutions
The batteries seem to discharge too quickly. (continued	The batteries have been exposed to high temperatures.	Replace the batteries.
	The batteries are too hot or too cold.	Restore the notebook to normal operating temperature. The Charging icon on the Status Indicator panel will flash when the battery is outside its operating range.
Shutdown and Startup Problems		
The Suspend/Resume button does not work.	The Suspend/Resume button is disabled from the Advanced submenu of the Power menu of the setup utility.	Enable the button from the setup utility.
	You did not hold the button in long enough.	Hold the button longer. This may need to be a few seconds if your application is preventing the CPU from checking for button pushes.
	There may be a conflict with the application software.	Close all applications and try the button again.
The system powers up, and displays power on information, but fails to load the operating system.	The boot sequence settings of the setup utility are not compatible with your configuration.	Set the operating source by pressing the [ESC] key while the Fujitsu logo is on screen or use the [F2] key and enter the setup utility and adjust the source settings from the Boot menu. *(See BIOS Setup Utility on page 29 for more information)*
	You have a secured system requiring a password to load your operating system.	Make sure you have the right password. Enter the setup utility and verify the Security settings and modify them as accordingly. *(See BIOS Setup Utility on page 29 for more information)*
	Internal hard drive was not detected.	Use the BIOS setup utility or Primary Master submenu, located within the Main menu, to try to auto detect the internal hard drive.
An error message is displayed on the screen during the notebook (boot) sequence.	Power On Self Test (POST) has detected a problem.	See the Power On Self Test (POST) messages to determine the meaning and severity of the problem. Not all messages are errors; some are simply status indicators. *(See Power On Self Test Messages on page 64 for more information)*
Your notebook appears to change setup parameters when you start it.	BIOS setup changes were not saved when you made them and exited the BIOS setup utility returning it to previous settings.	Make sure you select **Save Changes And Exit** when exiting the BIOS setup utility.
	The BIOS CMOS hold-up battery has failed.	Contact your support representative for repairs. This is not a user serviceable part but has a normal life of 3 to 5 years.
Your system display won't turn on when the system is turned on or when the system has resumed.	The system may be password-protected.	Check the status indicator panel to verify that the Security icon is blinking. If it is blinking, enter your password.

Problem	Possible Cause	Possible Solutions
Video Problems		
The built-in display is blank when you turn on your LifeBook notebook.	Something is pushing on the Closed Cover switch.	Clear the Closed Cover switch. *(See figure 2-3 on page 6 for location)*
	The notebook is set for an external monitor only.	Pressing [F10] while holding down the [Fn] key allows you to change your selection of where to send your display video. Each time you press the combination of keys you will step to the next choice. The choices, in order are: built-in display only, external monitor only, both built-in display and external monitor.
	The angle of the display and the brightness settings are not adequate for your lighting conditions.	Move the display and the brightness control until you have adequate visibility.
	The power management time-outs may be set for very short intervals and you failed to notice the display come on and go off again.	Press any button the keyboard, or move the mouse to restore operation. If that fails, push the Power/ Suspend/Resume button. (The display may be shut off by Standy mode, Auto Suspend or Video Timeout)
The LifeBook notebook turned on with a series of beeps and your built-in display is blank.	Power On Self Test (POST) has detected a failure which does not allow the display to operate.	Contact your support representative.
The display goes blank by itself after you have been using it.	The notebook has gone into Video timeout, Standby mode, Suspend mode or Save-to-Disk mode because you have not used it for a period of time.	Press any button on the keyboard, or move the mouse to restore operation. If that fails, push the Power/Suspend/Resume button. Check your power management settings, or close your applications and go to the Power Savings menu of the setup utility to adjust the timeout values to better suit your operation needs. *(See BIOS Setup Utility on page 29 for more information)*
	The power management time-outs may be set for very short intervals and you failed to notice the display come on and go off again.	Press any button on the keyboard, or move the mouse to restore operation. If that fails, push the Power/ Suspend/Resume button. (The display may be shut off by Standby Mode, Auto Suspend or Video Timeout)
	Something is pushing on the Closed Cover switch.	Check the Closed Cover switch. *(See figure 2-3 on page 6 for location)*
Your system display won't turn on when the system is turned on or when the system has resumed.	The system may be password-protected.	Check the status indicator panel to verify that the Security icon is blinking. If it is blinking, enter your password.
The Built-in Display does not close.	A foreign object, such as a paper clip, is stuck between the display and the keyboard.	Remove all foreign objects from the keyboard.

Problem	Possible Cause	Possible Solutions
The Built-in Display has bright or dark spots.	If the spots are very tiny and few in number, this is normal for a large LCD display.	This is normal; do nothing.
	If the spots are numerous or large enough to interfere with your operation needs.	Display is faulty; contact your support representative.
The application display uses only a portion of your screen and is surrounded by a dark frame.	You are running an application that does not support 800 x 600/1024 x 768 pixel resolution display and display compression is enabled.	Display compression gives a clearer but smaller display for applications that do not support 800 x 600/1024 x 768 pixel resolution. You can fill the screen but have less resolution by changing your display compression setting, (See the Video Features submenu, located within the Advanced menu of the BIOS. *(See BIOS Setup Utility on page 29 for more information)*
The Display is dark when on battery power.	The Power Management utility default is set on low brightness to conserve power.	Press [Fn] + [F7] to increase brightness or double-click on the battery gauge and adjust Power Control under battery settings.
You have connected an external monitor and it does not display any information.	Your BIOS setup is not set to enable your external monitor.	Try toggling the video destination by pressing [Fn] and [F10] together, or check your BIOS setup and enable your external monitor. (See the Video Features submenu, located within the Advanced Menu of the BIOS. *(See BIOS Setup Utility on page 29 for more information)*
	Your external monitor is not properly installed.	Reinstall your device. *(See External Monitor Port on page 52 for more information)*
	Your operating system software is not setup with the correct software driver for that device.	Check your device and operating system documentation and activate the proper driver.
You have connected an external monitor and it does not come on.	Your external monitor is not compatible with your LifeBook notebook.	See your monitor documentation and the External Monitor Support portions of the Specifications section. *(See Specifications on page 77 for more information)*
Miscellaneous Problems		
An error message is displayed on the screen during the operation of an application.	Application software often has its own set of error message displays.	See your application manual and help displays screens for more information. Not all messages are errors some may simply be status.

POWER ON SELF TEST MESSAGES

The following is an alphabetic list of error-and-status messages that Phoenix BIOS and/or your operating system can generate and an explanation of each message. Error messages are marked with an *. If an error message is displayed that is not in this list, write it down and check your operating system documentation both on screen and in the manual. If you can find no reference to the message and its meaning is not clear, contact your support representative for assistance.

nnnn Cache SRAM Passed

Where nnnn is the amount of system cache in kilobytes success-fully tested by the Power On Self Test. (This can only appear if you have an SRAM PC Card installed.)

***Diskette drive A error or Diskette drive B error**

Drive A: or B: is present but fails the BIOS Power On Self Test diskette tests. Check to see that the drive is defined with the proper diskette type in the Setup Utility, *(See BIOS Setup Utility on page 29 for more information)* and that the diskette drive is installed correctly. If the disk drive is properly defined and installed, avoid using it and contact your support representative.

***Extended RAM Failed at offset: nnnn**

Extended memory not working or not configured properly. If you have an installed memory upgrade module, verify that the module is properly installed. If it is properly installed, you may want to check your Windows Setup to be sure it is not using unavailable memory until you can contact your support representative.

nnnn Extended RAM Passed

Where nnnn is the amount of memory in kilobytes successfully tested.

***Failing Bits: nnnn The hex number nnnn**

This is a map of the bits at the memory address (in System, Extended, or Shadow memory) which failed the memory test. Each 1 (one) in the map indicates a failed bit. This is a serious fault that may cause you to lose data if you continue. Contact your support representative.

***Fixed Disk x Failure or Fixed Disk Controller Failure (where x = 1-4)**

The fixed disk is not working or not configured properly. This may mean that the hard drive type identified in your setup utility does not agree with the type detected by the Power On Self Test. Run the setup utility to check for the hard drive type settings and correct them if necessary. If the settings are OK and the message appears when you restart the system, there may be a serious fault which might cause you to lose data if you continue. Contact your support representative.

***Incorrect Drive A type – run SETUP**

Type of floppy drive A: not correctly identified in Setup. This means that the floppy disk drive type identified in your setup utility does not agree with the type detected by the Power On Self Test. Run the setup utility to correct the inconsistency.

***Incorrect Drive B type – run SETUP**

Type of floppy drive B: not correctly identified in Setup. This means that the floppy disk drive type identified in your setup utility does not agree with the type detected by the Power On Self Test. Run the setup utility to correct the inconsistency.

***Invalid NVRAM media type**

Problem with NVRAM access. In the unlikely case that you see this message you may have some display problems. You can continue operating but should contact your support representative for more information.

***Keyboard controller error**

The keyboard controller test failed. You may have to replace your keyboard or keyboard controller but may be able to use an external keyboard until then. Contact your support representative.

***Keyboard error**

Keyboard not working. You may have to replace your keyboard or keyboard controller but may be able to use an external keyboard until then. Contact your support representative.

***Keyboard error nn**

BIOS discovered a stuck key and displays the scan code for the stuck key. You may have to replace your keyboard but may be able to use an external keyboard until then. Contact your support representative.

***Monitor type does not match CMOS – Run SETUP**

Monitor type not correctly identified in Setup. This error probably means your BIOS is corrupted, run the setup utility and set all settings to the default conditions. If you still get this error, contact your support representative.

***Operating system not found**

Operating system cannot be located on either drive A: or drive C: Enter the setup utility and see if both the fixed disk, and drive A: are properly identified and that the boot sequence is set correctly. Unless you have changed your installation greatly, the operating system should be on drive C:. If the setup utility is correctly set, your hard drive may be corrupted.

***Parity Check 1 nnnn**

Parity error found in the system bus. BIOS attempts to locate the address and display it on the screen. If it cannot locate the address, it displays ????. This is a potentially data destroying failure. Contact your support representative.

***Parity Check 2 nnnn**
Parity error found in the I/O bus. BIOS attempts to locate the address and display it on the screen. If it cannot locate the address, it displays ????. This is a potentially data-destroying failure. Contact your support representative.

***Press <F1> to resume, <F2> to SETUP**
Displayed after any recoverable error message. Press the [F1] key to continue the boot process or the [F2] key to enter Setup and change any settings.

***Previous boot incomplete – Default configuration used**
Previous Power On Self Test did not complete successfully. The Power On Self Test will load default values and offer to run Setup. If the previous failure was caused by incorrect values and they are not corrected, the next boot will likely fail also. If using the default settings does not allow you to complete a successful boot sequence, you should turn off the power and contact your support representative.

***Real time clock error**
Real-time clock fails BIOS test. May require board repair. Contact your support representative.

***Shadow RAM Failed at offset: nnnn**
Shadow RAM failed at offset nnnn of the 64k block at which the error was detected. You are risking data corruption if you continue. Contact your support representative.

nnnn Shadow RAM Passed
Where nnnn is the amount of shadow RAM in kilobytes successfully tested.

***System battery is dead – Replace and run SETUP**
The BIOS CMOS RAM memory hold up battery is dead. This is part of your BIOS and is a board mounted battery which requires a support representative to change. You can continue operating but you will have to use setup utility default values or reconfigure your setup utility every time you turn off your notebook. This battery has an expected life of 2 to 3 years.

System BIOS shadowed
System BIOS copied to shadow RAM.

***System CMOS checksum bad – run SETUP**
BIOS CMOS RAM has been corrupted or modified incorrectly, perhaps by an application program that changes data stored in BIOS memory. Run Setup and reconfigure the system.

***System RAM Failed at offset: nnnn**
System memory failed at offset nnnn of in the 64k block at which the error was detected. This means that there is a fault in your built-in memory. If you continue to operate, you risk corrupting your data. Contact your support representative for repairs.

nnnn System RAM Passed
Where nnnn is the amount of system memory in kilobytes successfully tested.

***System timer error**
The timer test failed. The main clock that operates the computer is faulty. Requires repair of system board. Contact your support representative for repairs.

UMB upper limit segment address: nnnn
Displays the address of the upper limit of Upper Memory Blocks, indicating released segments of the BIOS memory which may be reclaimed by a virtual memory manager.

Video BIOS shadowed
Video BIOS successfully copied to shadow RAM.

EMERGENCY MEDIA PLAYER DRIVE TRAY RELEASE

If for some reason the eject button fails, you can open the DVD/CD-ROM tray with a paper clip or similar tool inserted into the eject hole in the far right side of the front of the tray. Straighten one side of a paper clip and push it gently into the hole. The tray will pop out a short distance.

MODEM RESULT CODES

The operating system and application software that is factory installed detects the modem characteristics and provides the necessary command strings to operate the modem. The internal modem operation is controlled by generic AT commands from the operating system and application software. The standard long form result codes may, in some cases, be displayed on your screen to keep you informed of the actions of your modem. The operating system and application software may suppress display of the result codes.

Examples of result codes are:

- OK
- NO CARRIER
- NO DIALTONE
- CONNECT 53000 (Connection complete at 53,000 bps.)
- ERROR
- FAX
- RING (This means an incoming call.)
- BUSY
- NO ANSWER

When using the internal modem with applications that are not factory installed refer to the application documentation.

RESTORING YOUR PRE-INSTALLED SOFTWARE

The Drivers and Applications Restore (DAR) CD contains:

- Sets of device drivers and Fujitsu utilities (in specific directories) that are unique to your LifeBook notebook configuration for use as documented below.
- A link to the Drive Image Special Edition (DISE) utility on your hard disk drive.
- Read-me files that provide additional use information for items on this CD-ROM.

If the DAR CD is in the drive when you boot up the system, a message will appear informing you that continuing to boot from the CD will overwrite all information on the hard drive, including saved files, and restore the hard drive to its factory configuration. If you wish to install drivers or applications **only** from the CD, remove the disk from the drive, reboot the system, and insert the CD after Windows has started.

If you have access to the internet, visit the Fujitsu Support web site at us.fujitsu.com/computers to check for the most current information, drivers and hints on how to perform recovery and system updates.

DRIVE IMAGE SPECIAL EDITION (DISE)

PowerQuest Drive Image Special Edition (DISE) provides a way to restore your computer if you experience a hard disk crash or other system failure. Fujitsu has used DISE to create an image of everything installed on the computer at the time you purchased it. The image is saved on a separate partition on the hard disk. You can use DISE to restore the factory image and return your computer to the state in which it was shipped from Fujitsu.

Although it is not necessary, you can use DISE to store additional image files that you create. For example, if you install several applications and save data files on your hard disk, you can create a new image file that includes them and then save that image file on the hard disk. Then, in the event of a hard disk failure, you can restore the image that includes the applications and data files you use.

Using the DISE feature will reduce the amount of usable disk space on your hard disk drive.

Creating a Backup Image

You can create a backup image of your C:\ drive at any time. The C:\ partition must be a FAT, FAT32, or NTFS partition, and it must be directly before the backup partition on your hard disk.

There are two ways to implement the DISE utility: When booting up the system, or from the desktop.

Creating a backup image when booting up

Before creating a backup image at boot-up, you must first change the boot-up priority in the BIOS so that the system will go to the CD drive first, rather than trying to boot-up from the hard drive or an external floppy disk drive.

To change the boot-up priority:

1. Start your system and press the [F2] key when the Fujitsu logo appears. You will enter the BIOS Setup Utility.
2. Using the arrow keys, go to the Boot menu.
3. Arrow down to the Boot Device Priority submenu and press [Enter].
4. Arrow down to the CD-ROM drive in the list, and press the space bar (or the + key) to move the CD-ROM drive to the top of the list. (The system attempts to boot from the devices in the order in which they are listed.)
5. Press [F10], then click on [Yes] to exit the BIOS Setup Utility and return to the boot process.

After you have changed the boot priority, you can create a backup image when you are booting up:

1. Install the DAR CD in the drive prior to booting up. When bootup begins, a message will appear informing you that continuing to boot from the CD will overwrite all information on the hard drive, including saved files, and restore the hard drive to its factory configuration.
2. When you are asked if you want to restore the factory image, click [**Y**]**es**.

Creating a backup image from the desktop

To create a backup image from the desktop, select Drive Image SE from the Program list. You will initially be prompted to create a backup diskette. It is not necessary to create the backup diskette, since the DAR CD performs the same function.

1. At the Drive Image Special Edition main screen, click **Options**> **Create New Backup.** DISE displays a warning that it must go to DOS to create the image.
3. Click **Yes.**

   DISE creates an image file in the backup partition. If you created a backup image previously, the new image overwrites the old one.

Enlarging the Backup Partition

If there is not enough unused space in the backup partition on your hard disk, DISE will resize the partition. DISE will display the minimum, maximum, and recommended sizes for the backup partition. You choose the size you want.

DISE takes the space from the FAT, FAT32, or NTFS partition that you are backing up. If there is not enough unused space in that partition to take, you will not be able to resize the backup partition and create an image file. You can delete files from the FAT, FAT32, or NTFS partition to create more unused space on the hard disk.

Restoring a Backup Image

You can restore either a factory image or a backup image you created. Be aware that restoring a backup image will replace the contents of the C:\ partition with the image you restore.

1. Disable virus protection software. If virus protection software is enabled, DISE will hang.
2. From the DISE main window, click **Options** > **Restore Backup** to restore an image you created, or click **Options** > **Restore Factory Backup** to restore the factory image.

   DISE shuts down to DOS and restores the image file.

Re-Installing Individual Drivers and Applications

The Drivers and Application CD can be used to selectively re-install drivers and/or applications that may have been un-installed or corrupted.

To re-install drivers and/or applications:

1. Boot up the system and insert the DAR CD after Windows has started. The LifeBook Easy Installation screen appears.
2. Select the drivers and applications you want to install from the list that is displayed.
3. Click [Start]. Follow the prompts that appear to complete installation of the selected drivers and/or applications.

AUTOMATICALLY DOWNLOADING DRIVER UPDATES

Your system has a convenient tool called the Fujitsu Driver Update (FDU) utility. With FDU, you can choose to automatically or manually go to the Fujitsu site to check for new updates for your system.

The FDU icon should appear in the system tray at the bottom right of your screen (roll the cursor over the icons to find the correct one). If the FDU icon does not appear in the system tray, it can be started by going to [Start] -> All Programs, and clicking on Fujitsu Driver Update; this will create the icon automatically.

To invoke the FDU menu, you can either right-click on the FDU icon or hold the pen on the icon for a couple of seconds until the menu appears. The menu contains the following items:

- **Check for updates now**
  Allows for manual driver update search. The first time it is used, you are prompted to agree to a user agreement. After clicking on the icon, the FDU automatically connects with the Fujitsu site to check for updates and downloads them. While downloading, the icon has a red bar through it, indicating that it cannot be used while the download is in process. When the update is complete, a message appears informing you of the fact.
- **Enable Automatic Update Notifications**
  Automatically searches for new updates on a regular basis (approximately every 3 days).
- **Show update history**
  Brings up a screen that displays a history of updates that have been made via the FDU.
- **About Fujitsu Driver Update**
  Displays the FDU version number and copyright information
- **Fujitsu Driver Update Readme**
  Displays the FDU readme.

6

Care and Maintenance

Care and Maintenance

If you use your Fujitsu LifeBook notebook carefully, you will increase its life and reliability. This section provides some tips for looking after the notebook and its devices.

Electrical equipment may be hazardous if misused. Operations of this product or similar products, must always be supervised by an adult. Do not allow children access to the interior of any electrical products and do not permit them to handle any cables.

Caring for your LifeBook notebook

- Your LifeBook notebook is a durable but sensitive electronic device. Treat it with respect and care.
- Make a habit of transporting it in a suitable carrying case.
- Do not attempt to service the computer yourself. Always follow installation instructions closely.
- Keep it away from food and beverages.
- If you accidentally spill liquid on your LifeBook notebook:
  1. Turn it off.
  2. Position it so that the liquid can run out.
  3. Let it dry out for 24 hours, or longer if needed.
  4. If your notebook will not boot after it has dried out, call your support representative.
- Do not use your Fujitsu LifeBook notebook in a wet environment (near a bathtub, swimming pool).
- Always use the AC adapter and batteries that are approved for your notebook.
- Avoid exposure to sand, dust and other environmental hazards.
- Do not expose your notebook to direct sunlight for long periods of time as temperatures above 140° F (60° C) may damage your notebook.
- Keep the covers closed on the connectors and slots when they are not in use.
- Do not put heavy or sharp objects on the computer.
- If you are carrying your LifeBook notebook in a briefcase, or any other carrying case, make sure that there are no objects in the case pressing on the lid.
- Never position your notebook such that the optical drive is supporting the weight of the notebook.
- Do not drop your notebook.
- Do not touch the screen with any sharp objects.

Cleaning your LifeBook notebook

- Always disconnect the power plug. (Pull the plug, not the cord.)
- Clean your LifeBook notebook with a damp, lint-free cloth. Do not use abrasives or solvents.
- Use a soft cloth to remove dust from the screen. Never use glass cleaners.

Storing your LifeBook notebook

- If storing your notebook for a month or longer, turn your LifeBook notebook off, fully charge the battery(s), then remove and store all Lithium ion batteries.
- Store your notebook and batteries separately. If you store your LifeBook with a battery installed, the battery will discharge, and battery life will be reduced. In addition, a faulty battery might damage your LifeBook.
- Store your Fujitsu LifeBook in a cool, dry location. Temperatures should remain between 13ºF (-25ºC) and 140ºF (60ºC).

Traveling with your LifeBook notebook

- Do not transport your notebook while it is turned on.
- It is recommended that you carry your notebook with you while travelling, rather than checking it in as baggage.
- Always bring your System Recovery CD that came with your notebook when you travel. If you experience system software problems while traveling, you may need it to correct any problems.
- Never put your notebook through a metal detector. Have your notebook hand-inspected by security personnel. You can however, put your notebook through a properly tuned X-ray machine. To avoid problems, place your notebook close to the entrance of the machine and remove it as soon as possible or have your notebook hand-inspected by security personnel. Security officials may require you to turn your notebook On. Make sure you have a charged battery on hand.
- When traveling with the hard drive removed, wrap the drive in a non-conducting materials (cloth or paper). If you have the drive checked by hand, be ready to install the drive if needed. Never put your hard drive through a metal detector. Have your hard drive hand-inspected by security personnel. You can however, put your hard drive through a properly tuned X-ray machine.
- Take the necessary plug adapters if you're traveling overseas. Check the following diagram to determine which plug adapter you'll need or ask your travel agent.

Outlet Type	Location
	United States, Canada, parts of Latin America, Mexico, Japan, Korea, the Philippines, Taiwan
	Russia and the Commonwealth of Independent States (CIS), most of Europe, parts of Latin America, the Middle East, parts of Africa, Hong Kong, India, most of South Asia
	United Kingdom, Ireland, Malaysia, Singapore, parts of Africa
	China, Australia, New Zealand

BATTERIES

Caring for your Batteries

- Always handle batteries carefully.
- Do not short-circuit the battery terminals (that is, do not touch both terminals with a metal object). Do not carry lose batteries in a pocket or purse where they may mix with coins, keys, or other metal objects. Doing so may cause an explosion or fire.
- Do not drop, puncture, disassemble, mutilate or incinerate the battery.
- Recharge batteries only as described in this manual and only in ventilated areas.
- Do not leave batteries in hot locations for more than a day or two. Intense heat can shorten battery life.
- Do not leave a battery in storage for longer than 6 months without recharging it.

Increasing Battery Life

- Power your LifeBook notebook through the AC or optional auto/airline adapter whenever possible.
- If your notebook is running on battery power all day, connect it to the AC adapter overnight to recharge the battery.
- Keep brightness to the lowest level comfortable.
- Set the power management for maximum battery life.
- Put your notebook in Suspend mode when it is turned on and you are not actually using it.
- Limit your media drive access.
- Disable the Media Player auto insert notification function.
- Always use fully charged batteries.
- Eject PCMCIA™ cards when not in use.

FLOPPY DISKS AND DRIVES

Caring for your Floppy Disks

- Avoid using the floppy disks in damp and dusty locations.
- Never store a floppy disk near a magnet or magnetic field.
- Do not use a pencil or an eraser on a disk or disk label.
- Avoid storing the floppy disks in extremely hot or cold locations, or in locations subject to severe temperature changes. Store at temperatures between 50° F (10°C) and 125°F (52°C).
- Do not touch the exposed part of the disk behind the metal shutter.
- Never use the floppy disk drive with any liquid, metal, or other foreign matter inside the floppy disk drive or disk.
- Never disassemble your floppy disk drive.

MEDIA CARE

Caring for your Media (DVD/CD/CD-R)

Media discs are precision devices and will function reliably if given reasonable care.

- Always store your media disc in its case when it is not in use.
- Always handle discs by the edges and avoid touching the surface.
- Avoid storing any media discs in extreme temperatures.
- Do not bend media discs or set heavy objects on them.
- Do not spill liquids on media discs.
- Do not scratch media discs.
- Do not get dust on media discs.
- Never write on the label surface with a ballpoint pen or pencil. Always use a felt pen.
- If a media disc is subjected to a sudden change in temperature, cold to warm condensation may form on the surface. Wipe the moisture off with a clean, soft, lint free cloth and let it dry at room temperature. DO NOT use a hair dryer or heater to dry media discs.
- If a disc is dirty, use only a DVD/CD cleaner or wipe it with a clean, soft, lint free cloth starting from the inner edge and wiping to the outer edge.

Caring for your Optical Drive

Your optical drive is durable but you must treat it with care. Please pay attention to the following points:

- The drive rotates the compact disc at a very high speed. Do not carry it around or subject it to shock or vibration with the power on.
- Avoid using or storing the drive where it will be exposed to extreme temperatures.
- Avoid using or storing the drive where it is damp or dusty.
- Avoid using or storing the drive near magnets or devices that generate strong magnetic fields.
- Avoid using or storing the drive where it will be subjected to shock or vibration.
- Do not disassemble or dismantle the optical drive.
- Use of a commercially available lens cleaner is recommended for regular maintenance of your drive.

PC CARDS

Caring for your PC Cards

PC Cards are durable, but you must treat them with care. The documentation supplied with your PC Card will provide specific information, but you should pay attention to the following points:

- To keep out dust and dirt, store PC Cards in their protective sleeves when they are not installed in your LifeBook notebook.
- Avoid prolonged exposure to direct sunlight or excessive heat.
- Keep the cards dry.
- Do not flex or bend the cards, and do not place heavy objects on top of them.
- Do not force cards into the slot.
- Avoid dropping cards, or subjecting them to excessive vibration.

7
Specifications

E Series.book Page 77 Wednesday, April 14, 2004 10:28 AM

Specifications

This section provides the hardware and environmental specifications for your Fujitsu LifeBook notebook. Specifications of particular configurations will vary.

CONFIGURATION LABEL

There is a configuration label located on the bottom of your LifeBook notebook. (See Figure 2-7 on page 10 for location) This label contains specific information regarding the options you've chosen for your notebook. Following is an example label and information on how to read your own configuration label.

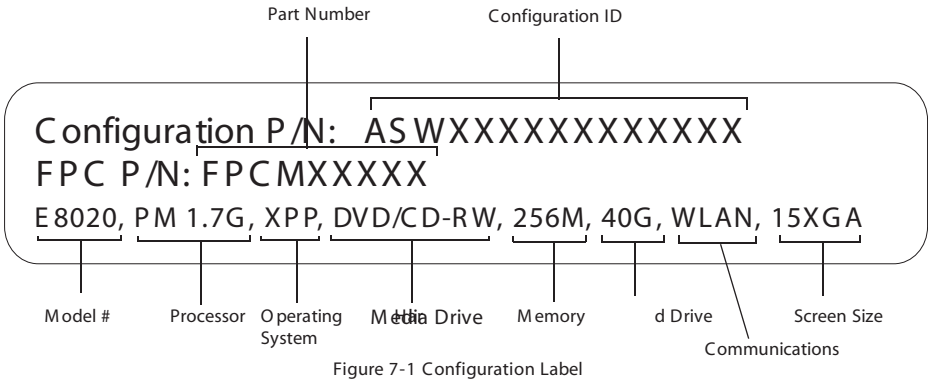

Figure 7-1 Configuration Label

MICROPROCESSOR

Intel Pentium M processor (Refer to the system label to determine the speed of your processor).

CHIPSET

Intel 855GME

I/O Controller Hub 4 Mobile (ICH4-M)

MEMORY

System Memory
DDR 333 MHz SDRAM memory module.
Two DIMM slots; upgradeable to 2 GB of total memory (1 GB x 2)

Cache Memory
L2 on-die, 1 MB or 2 MB depending upon system configuration

VIDEO

Built-in color flat-panel TFT active matrix LCD display with simultaneous display capability

Video Color and Resolution
15" TFT XGA model:
Internal: 1024 x 768 pixel resolution, 16M colors
External: 1600 x 1200 pixel resolution, 16M colors
Simultaneous Video: 1024 x 768, 16M colors. XGA, SVGA and VGA compatible

15" SXGA+ model:
Internal: 1400 x 1050 pixel resolution, 16M colors
External: 1600 x 1200 pixel resolution, 16M colors
Simultaneous Video: 1400 x 1050 pixel resolution, 16M colors

Video RAM
Intel® 855GME video graphics chip with integrated 32-bit 3D/2D gfx core with Accelerated Graphics Port (AGP) support. Up to 64 MB shared video memory using Dynamic Video Memory Technology (DVMT).

AUDIO

Sigmatel ST9751T codec
Stereo headphone jack, 3.5 mm, 1 V_{rms} or less, minimum impedance 32 Ohms
Mono microphone jack, 3.5 mm, 100 mV_{p-p} or less, minimum impedance 10K Ohms
Two built-in stereo speakers, 20 mm diameter

MASS STORAGE DEVICE OPTIONS

Hard Drive
5400 rpm: 40 GB, 60 GB, or 80 GB fixed hard drive, Ultra DMA 100, 2.5", 9.5 mm

4200 rpm: 40 GB or 30 GB fixed hard drive, Ultra DMA 100, 2.5", 9.5 mm

Media Player
Depending upon the configuration of your system, one of the following is installed.
CD Drive (modular 24x maximum), or,
Combo DVD/CD-RW Drive (modular 8x maximum DVD/24x maximum write, 10x maximum rewrite, 24x maximum read CD-RW combo drive), or,
Super-Multi DVD Drive (modular 4x DVD-R, 2x DVD-RW, 2.4x DVD+R, 2.4x DVD+RW, 2x DVD-RAM, 8x DVD-ROM, 16x CD-R, 8x CD-RW, 24x CD-ROM)

FEATURES

Integrated Pointing Device

Touchpad pointing device with scroll button
Optional Quick Point cursor control button

Communications

Modem: Internal V.92 standard 56K fax/modem (ITU V.90, 56K data, 14.4K fax)

Gigabit LAN: Internal wired 10Base-T/100Base-Tx/1000Base-T/Tx Ethernet LAN

Wireless LAN:

Certain configurations of the Lifebook E8000 notebook have an optional Wireless LAN device installed. If you have an IntelPRO device installed, your system is classified as a Centrino product. If you have no wireless device or a Wireless LAN device other than IntelPRO, your system is classified as a Pentium M product. (For additional information about the Wireless LAN device, refer to the Wireless LAN User's Guide on page 93).

E8020 Model: Integrated Intel PRO Set Wireless LAN (802.11a+b/g), Wi-Fi-compliant
E8020D Model: Optional integrated Atheros Wireless LAN (802.11a+b/g), Wi-Fi-compliant
Optional Bluetooth device for wireless personal area network communication

LifeBook Security/Application Panel

The Application Launcher buttons on your LifeBook notebook default to the following applications:

Table 7-1 Application Launcher Defaults

Button Label	Button Function	Default Application
1	Application A	Notepad
2	Application B	Calculator
3	Internet	Internet Explorer
4	E-Mail	Netscape Messenger

Theft Prevention Lock

Lock slot for use with security restraint systems. The Kensington locking system is recommended.

DEVICE PORTS

On the LifeBook notebook:

PC Card slots for two Type I or Type II cards or one Type III card: PCMCIA Standard 2.1 with CardBus support
Memory Stick/SD Card slot
One 15-pin D-SUB connector for VGA external monitor (see Display specifications)
Three USB 2.0 (Universal Serial Bus) connectors for input/output devices
One serial port (RS-232, D-Sub 9-pin)
One parallel port (ECP, D-Sub 25-pin)
One IEEE 1394 (4-pin type) jack
One SPDIF jack
Infrared port (IrDA1.1, 4 Mbps max.)
One 7-pin video out jack
One modular modem (RJ-11) connector
One LAN (RJ-45) connector
Docking port (100-pin, to dock with port replicator)
One stereo headphone jack. (See Audio specifications)
One mono microphone jack. (See Audio specifications)
Embedded Smart Card Reader (requires third-party application)
Wireless LAN antenna with pre-installed on/off switch
Optional Bluetooth module with antenna

On the Optional Port Replicator:

One 6-pin mini DIN PS/2 compatible connectors for external keyboard or mouse
One 25-pin D-SUB connector for parallel input/output devices; Bi-directional, output only or ECP
One 15-pin D-SUB connector for VGA external monitor (see Display specifications)
One 9-pin D-SUB connector for RS-232C serial input/output devices
Four USB 2.0 (Universal Serial Bus) connectors for input/output devices
One LAN (RJ-45) connector
One DC In connector
One microphone In jack
One headphone jack
One Digital Video (DVI-D) 24-pin, female interface
One power/suspend/resume button

KEYBOARD

Built-in keyboard with all functions of 101 key PS/2 compatible keyboards.

Total number of keys: 84
Function keys: F1 through F12
Feature extension key: Fn
Two Windows keys: one Start key, one application key
Key pitch: 19 mm
Key stroke: 2.7 mm
Built-in Touchpad pointing device with left and right buttons and scroll button.
Built-in Palm Rest
Optional Quick Point cursor control button

External Keyboard Support

USB or PS/2-compatible (PS/2 compatible with Port Replicator only)

External Mouse Support

USB or PS/2-compatible (PS/2 compatible with Port Replicator only)

POWER

Batteries

One 8-cell Lithium ion battery, rechargeable, 14.4V, 4800 mAh, 69.1 Wh

Optional Flexible Bay battery: 6-cell Lithium ion battery, rechargeable, 10.8V, 3400 mAh, 41 Wh

AC Adapter
Autosensing 100-240V AC, supplying 19V DC, 4.22A, 80W to the LifeBook notebook, Fujitsu Model FPCAC33AP, which includes an AC cable.

Power Management
Conforms to ACPI (Advanced Configuration and Power Interface).

DIMENSIONS AND WEIGHT

Overall Dimensions
Approximately 13.11"(w) x 11.22"(d) x 1.27”/1.44”(h) (333 mm x 285 mm x 32.2/36.5 mm)

Weights
Approximately TBD with battery and weight saver.
Approximately TBD with battery and DVD/CD-RW Combo drive.

ENVIRONMENTAL REQUIREMENTS

Temperature
Operating: 41° to 95° F (5° to 35° C)
Non-operating: 5° to 140° F (–15° to 60° C)

Humidity
Operating: 20% to 85%, relative, non-condensing
Non-operating; 8% to 85%, relative, non-condensing

Altitude
Operating: 10,000 feet (3,048 m) maximum

POPULAR ACCESSORIES

For ordering or additional information on Fujitsu accessories please visit our Web site at us.fujitsu.com/computers or call 1-877-372-3473.

Memory Upgrades

- 256 MB SDRAM
- 512 MB SDRAM
- 1GB SDRAM

Docking

- Port Replicator

Power

- Main Lithium ion battery
- Battery Charger
- Auto/Airline Adapter
- AC Adapter

PC Cards

- Wireless PC Card
- 4-in-1 Media Card Adapter
- Compact Flash Media Card Adapter

Additional Accessories

- Wireless Keyboard and Mouse
- External USB Floppy Disk Drive
- Presentation Audio System
- TeleAdapt 16' TeleCord
- Notebook Guardian Lock
- IBM Modem Saver

Carrying Cases

- Diplomat
- Backpack
- Director
- MobileMax Wheeled Case

PRE-INSTALLED SOFTWARE

Depending on your pre-installed operating system, your Fujitsu LifeBook notebook comes with pre-installed software for playing audio and video files of various formats. In addition there is file transfer software, virus protection software and Power Management software. The following list indicates the pre-installed software associated with your system.

- Adobe Acrobat Reader
- Drive Image Special Edition (DISE)
- EarthLink 5.0
- Fujitsu HotKey
- LifeBook Security/Application Panel
- Symantec Norton AntiVirus 2004 (90-day free trial)
- Netscape 7.0
- Quicken 2004 New User Edition
- Microsoft Works 7.0

LEARNING ABOUT YOUR SOFTWARE

Tutorials

All operating systems and most application software have tutorials built into them upon installation. We highly recommend that you step through the tutorial before you use an application.

Manuals

Included with your notebook you will find manuals for your installed operating system and other pre-installed software. Any manuals that are not included, are available online through the help system of the software. We recommend that you review these manuals for general information on the use of these applications.

Adobe Acrobat Reader

The Adobe Acrobat Reader, located in the Service and Support Software folder, allows you to view, navigate, and print PDF files from across all of the major computing platforms.

Drive Image Special Edition (DISE) by PowerQuest

DISE by PowerQuest provides a way to restore your computer if you experience a hard disk crash or other system failure. DISE is used to restore the factory image and restore the system to its original state.

Earthlink 5.0

Software suite that allows you to connect with the Internet.

Fujitsu HotKey

Fujitsu HotKey allows you to control the display brightness of your notebook in order to maximize battery life.

Quicken 2004 New User Edition

Quicken 2004 New User Edition by Intuit is a personal money management program. It has features such as portfolio management, account registries, on-line banking and bill paying features. This application is for new users who are using Quicken software for the first time. Full version upgrade information is available on line.

LifeBook Security/Application Panel Software

Your LifeBook notebook is pre-installed with software utilities that let you operate and configure your LifeBook Security/Application Panel.

The Security Panel portion allows for password protection while the system is off or in Suspend mode. The Security Panel utilities are found under the Start menu, under Programs, then under LifeBook Security Panel.

The Application Panel utilities are found under the Start menu, Settings/Control Panel, then Application Panel. To open the CD Player and Application Panel Help, select Start, Programs, LifeBook Application Panel.

Norton AntiVirus 2004

Your system is preinstalled with a free 90-day trial version of Symantec's Norton AntiVirus™ 2003. Norton AntiVirus is a program designed to protect your LifeBook notebook from computer viruses. It assists in the protection of the data currently residing on your hard disk from destruction or contamination. The 90-day trial version is activated upon your acceptance of software license agreement. After 90 days, it will be necessary to purchase a subscription from Symantec to download latest virus definitions.

Netscape 7.0

Browser suite, including integrated E-mail accounts, instant messaging, address book, search, and other tools and plug-ins.

Fujitsu Driver Update Utility

The Fujitsu Driver Update (FDU) utility is pre-installed on your system. With FDU, you can choose to automatically or manually go to the Fujitsu site to check for new updates for your system. *(See Automatically Downloading Driver Updates on page 67 for more information)*.

8
Glossary

Glossary

AC Adapter
A device which converts the AC voltage from a wall outlet to the DC voltage needed to power your LifeBook notebook.

ACPI
Advanced Configuration and Power Interface

Active-Matrix Display
A type of technology for making flat-panel displays which has a transistor or similar device for every pixel on the screen.

AdHoc

A name of a wireless LAN configuration.

It is a type of communication using wireless cards only.

Another type of communication is called Infrastructure (using a wireless card and an access point).

ADSL

Asymmetric Digital Subscriber Line

Technology for transporting high bit-rate services over ordinary phone lines.

AGP
Accelerated Graphics Port

Graphics port specifically designed for graphics-intensive devices, such as video cards and 3D accelerators.

Auto/Airline Adapter
A device which converts the DC voltage from an automobile cigarette lighter or aircraft DC power outlet to the DC voltage needed to power your LifeBook notebook.

BIOS
Basic Input-Output System. A program and set of default parameters stored in ROM which tests and operates your LifeBook notebook when you turn it on until it loads your installed operating system from disk. Information from the BIOS is transferred to the installed operating system to provide it with information on the configuration and status of the hardware.

Bit
An abbreviation for binary digit. A single piece of information which is either a one (1) or a zero (0).

bps
An abbreviation for bits per second. Used to describe data transfer rates.

Boot
To start-up a computer and load its operating system from disk, ROM or other storage media into RAM.

Bus
An electrical circuit which passes data between the CPU and the sub-assemblies inside your LifeBook notebook.

Byte
8 bits of parallel binary information.

Cache Memory
A block of memory built into the micro-processor which is much faster to access than your system RAM and used in specially structured ways to make your overall data handling time faster.

CardBus
A faster, 32-bit version of the PC Card interface which offers performance similar to the 32-bit PCI architecture.

CD-ROM
Compact disk read only memory. This is a form of digital data storage which is read optically with a laser rather than a magnetic head. A typical CD-ROM can contain about 600MB of data and is not subject to heads crashing into the surface and destroying the data when there is a failure nor to wear from reading.

Channel

A radio frequency band used for communication between wireless cards and access points.

CMOS RAM
Complementary metal oxide semiconductor random access memory. This is a technology for manufacturing random access memory which requires very low levels of power to operate.

COM Port
Abbreviation for communication port. This is your serial interface connection.

Command
An instruction which you give your operating system. Example: run a particular application or format a floppy disk.

Configuration
The combination of hardware and software that makes up your system and how it is allocated for use.

CRT
Cathode Ray Tube. A display device which uses a beam of electronic particles striking a luminescent screen. It

produces a visual image by varying the position and intensity of the beam.

Data
The information a system stores and processes.

DC
Direct current. A voltage or current that does not fluctuate periodically with time.

Default Value
A pre programmed value to be used if you fail to set your own.

DHCP

Dynamic Host Configuration Protocol

A protocol used to automatically acquire parameters required for the communication, such as IP address.

The sender of IP address is called a DHCP server, and the receiver is called a DHCP client.

DIMM
Dual-in-line memory module.

DISE
Drive Image Special Edition.
A utility that allows you to restore the original factory image on your hard drive in the event of corruption or accidental erasure of files or applications.

Disk
A spinning platter of magnetic data storage media. If the platter is very stiff it is a hard drive, if it is highly flexible it is a floppy disk, if it is a floppy disk in a hard housing with a shutter it is commonly called a diskette.

Disk Drive
The hardware which spins the disk and has the heads and control circuitry for reading and writing the data on the disk.

Diskette
A floppy disk in a hard housing with a shutter.

DMA
Direct Memory Access. Special circuitry for memory to memory transfers of data which do not require CPU action.

DMI
Desktop Management Interface. A standard that provides PC management applications with a common method of locally or remotely querying and configuring PC computer systems, hardware and software components, and peripherals.

DNS

Domain Name System

A function to control the association between the IP address and the name assigned to the computer.

If you do not know the IP address but if you know the computer name, you can still communicate to that computer.

DOS
Disk Operating System (MS-DOS is a Microsoft Disk Operating System).

Driver
A computer program which converts application and operating system commands to external devices into the exact form required by a specific brand and model of device in order to produce the desired results from that particular equipment.

DVMT
Dynamic Video Memory Technology

A video memory architecture that increases the efficiency of the motherboard by using innovative memory utilization and direct AGP.

ECP
Extended Capability Port. A set of standards for high speed data communication and interconnection between electronic devices.

Encryption Key (Network Key)

Data encryption key used to encrypt message text and for computing message integrity checks. Data encryption protects data from unauthorized viewing.

This device uses the same encryption key to encode and decode the data, and the identical encryption key is required between the sender and receiver.

ESD
Electro-Static Discharge. The sudden discharge of electricity from a static charge which has built-up slowly. Example: the shock you get from a doorknob on a dry day or the sparks you get from brushing hair on a dry day.

Extended Memory
All memory more than the 640KB recognized by MS-DOS as system memory.

FCC
Federal Communication Commission.

Floppy Disk
A spinning platter of magnetic data storage media which is highly flexible.

GB
Gigabyte.

Hard drive
A spinning platter of magnetic data storage media where the platter is very stiff.

I/O
Input/Output. Data entering and leaving your notebook in electronic form.

I/O Port
The connector and associated control circuits for data entering and leaving your notebook in electronic form.

IDE
Intelligent Drive Electronics. A type of control interface for a hard drive which is inside the hard drive unit.

Infrared
Light just beyond the red portion of the visible light spectrum which is invisible to humans.

Infrastructure

A name of a wireless LAN configuration. This type of communication uses an access point.

Another type of communication is called AdHoc.

IP Address

An identifier for a computer or device on a TCP/IP network. Networks using the TCP/IP protocol route messages based on the IP address of the destination. The format of an IP address is a 32-bit numeric address written as four numbers separated by periods. Each number can be zero to 255. For example, 1.160.10.240 could be an IP address.

Within an isolated network, you can assign IP addresses at random as long as each one is unique. However, connecting a private network to the Internet requires using registered IP addresses (called Internet addresses) to avoid duplicates.

The four numbers in an IP address are used in different ways to identify a particular network and a host on that network. Three regional Internet registries -- ARIN, RIPE NCC and APNIC -- assign Internet addresses from the following three classes.

Class A - supports 16 million hosts on each of 126 networks

Class B - supports 65,000 hosts on each of 16,000 networks

Class C - supports 254 hosts on each of 2 million networks

The number of unassigned Internet addresses is running out, so a new classless scheme called CIDR is gradually replacing the system based on classes A, B, and C and is tied to adoption of IPv6. (credit: webopedia.com)

IR
An abbreviation for infrared.

IrDA
Infrared Data Association. An organization which produces standards for communication using infrared as the carrier.

IRQ
Interrupt Request. An acronym for the hardware signal to the CPU that an external event has occurred which needs to be processed.

KB
Kilobyte.

LAN
Local Area Network. An interconnection of computers and peripherals within a single limited geographic location which can pass programs and data amongst themselves.

LCD
Liquid Crystal Display. A type of display which makes images by controlling the orientation of crystals in a crystalline liquid.

Lithium ion Battery
A type of rechargeable battery which has a high power-time life for its size and is not subject to the memory effect as Nickel Cadmium batteries.

LPT Port
Line Printer Port. A way of referring to parallel interface ports because historically line printers were the first and latter the most common device connected to parallel ports.

MAC Address

Media Access Control Address

A unique physical address of a network card. For Ethernet, the first three bytes are used as the vendor code, controlled and assigned by IEEE. The remaining three bytes are controlled by each vendor (preventing

overlap), therefore, every Ethernet card is given a unique physical address in the world, being assigned with a different address from other cards. For Ethernet, frames are sent and received based on this address.

MB
Megabyte.

Megahertz
1,000,000 cycles per second.

Memory
A repository for data and applications which is readily accessible to your LifeBook notebook's CPU.

MHz
Megahertz.

MIDI
Musical Instrument Digital Interface. A standard communication protocol for exchange of information between computers and sound producers such as synthesizers.

Modem
A contraction for MOdulator-DEModulator. The equipment which connects a computer or other data terminal to a communication line.

Monaural
A system using one channel to process sound from all sources.

MPU-401
A standard for MIDI interfaces and connectors.

MTU
Maximum Transmission Unit

The maximum data size that can be transferred at a time through the Internet or other networks. You can set a smaller MTU size to obtain successful communication, if you have difficulty transferring data due to the fact that the maximum size is too large.

Norton AntiVirus
Web-based software that protects you email, instant messages, and other files by removing viruses, worms, and Trojan horses.

NTSC
National TV Standards Commission. The standard for TV broadcast and reception for the USA.

Operating System
A group of control programs that convert application commands, including driver programs, into the exact form required by a specific brand and model of microprocessor in order to produce the desired results from that particular equipment.

Partition
A block of space on a hard drive which is set aside and made to appear to the operating system as if it were a separate disk, and addressed by the operating system accordingly.

PCI
Peripheral Component Interconnect

Self-configuring PC local bus. Designed by Intel, PCI has gained wide acceptance as a standard bus design.

PCMCIA
PCMCIA is a trademark of the Personal Computer Memory Card International Association. The Personal Computer Memory Card International Association is an organization that sets standards for add-in cards for personal computers.

Peripheral Device
A piece of equipment which performs a specific function associated with but not integral to a computer. Examples: a printer, a modem, a CD-ROM.

Pitch (keyboard)
The distance between the centers of the letter keys of a keyboard.

Pixel
The smallest element of a display, a dot of color on your display screen. The more pixels per area the clearer your image will appear.

POST
Power On Self Test. A program which is part of the BIOS which checks the configuration and operating condition of your hardware whenever power is applied to your notebook. Status and error messages may be displayed before the operating system is loaded. If the self test detects failures that are so serious that operation can not continue, the operating system will not be loaded.

PPPoE
Point to Point Protocol over Ethernet.

A protocol for Ethernet, using a Point-to-Point Protocol (PPP), which is used for connection on the phone line.

Program
An integrated set of coded commands to your computers telling your hardware what to do and how and when to do it.

Protocol

Procedures and rules use to send and receive data between computers.

- Method of sending and receiving data

- Process used to handle communication errors

Conditions required for communication are organized in procedures for correct transfer of information.

RAM
Random Access Memory. A hardware component of your LifeBook notebook that holds binary information (both program and data) as long as it has the proper power applied to it.

RAM Module
A printed circuit card with memory and associated circuitry which allows the user to add additional memory to the computer without special tools.

Reset
The act of reloading the operating system. A reset erases all information stored in RAM.

Restart
See Reset.

Resume
To proceed after interruption. In your notebook this refers to returning to active operation after having been in one of the suspension states.

ROM
Read Only Memory. A form of memory in which information is stored by physically altering the material. Data stored in this way can not be changed by your notebook and does not require power to maintain it.

SDRAM
Synchronous Dynamic Random Access Memory.

Serial Port
A connection to another device through which data is transferred one bit at a time on a single wire with any other wires only for control of the device not for transfer of data.

SMART
Self-Monitoring, Analysis and Reporting Technology (SMART) is an emerging technology that provides near-term failure predictions for hard drives. When SMART is enabled the hard drive monitors pre-determined drive attributes that are susceptible to degradation over time. If a failure is likely to occur, SMART makes a status report available so that the LifeBook notebook can prompt the user to back up the data on the drive. Naturally not all failures are predictable. SMART predictability is limited to those attributes which the drive can self-monitor. In those cases where SMART can give advance warning, a considerable amount of precious data can be saved.

SRAM
Static random access memory. A specific technology of making RAM which does not require periodic data refreshing.

SSID

Service Set Identifier

Specifies which network you are joining. Some systems allow you to specify any SSID as an option so you can join any network.

Standby
To make inoperative for a period of time. Your LifeBook notebook uses various suspension states to reduce power consumption and prolong the charge of your battery.

Status Indicator
A display which reports the condition of some portion of your hardware. On your LifeBook notebook this is an LCD screen just above the keyboard.

Stereo (audio)
A system using two channels to process sound from two different sources.

SVGA
Super VGA.

S-Video
Super Video. A component video system for driving a TV or computer monitor.

System Clock
An oscillator of fixed precise frequency which synchronizes the operation of the system and is counted to provide time of day and date.

TCP/IP

Transmission Control Protocol/Internet Protocol.
A standard Internet protocol that is most widely used.

TFT
Thin Film Transistor – A technology for flat display panels which uses a thin film matrix of transistors to control each pixel of the display screen individually.

UL
Underwriters Laboratories – An independent organization that tests and certifies the electrical safety of devices.

USB
Universal Serial Bus.
Standard that allows you to simultaneously connect up to 127 USB devices such as game pads, pointing devices, printers, and keyboards to your computer.

VGA
Video Graphics Array. A video display standard originally introduced by IBM with the PS/2 series of personal computers.

VRAM
Video Random Access Memory. A memory dedicated to video display data and control.

WFM
Wired for Management is Intel's broad-based initiative to reduce the total cost of ownership (TCO) of business computing without sacrificing power and flexibility.

Wi-Fi Compatible
Wi-Fi (Wireless Fidelity) Identifies that the product has passed the interoperability test, supplied by the WECA (Wireless Ethernet Compatibility Alliance), which guarantees the interoperability of wireless IEEE 802.11 LAN products. For more information on the Wi-Fi standard, go to the WECA Web site at: www.wirelessethernet.com.

WLAN
Wireless Local Area Network. A wireless interconnection of computers and peripherals within a single limited geographic location which can pass programs and data amongst themselves.

Write Protect
Prevent alteration of the binary state of all bits in a storage media. Example: all information on a device such as a floppy diskette; a block of space in a storage media such as a partition of a hard drive; a file or directory of floppy diskette or hard drive.

XGA
Extended VGA.

Zip Drive
A 100MB or 250MB read/write removable media disk drive.

Regulatory Information

NOTICE

Changes or modifications not expressly approved by Fujitsu could void this user's authority to operate the equipment.

FCC NOTICES

Notice to Users of Radios and Television

These limits are designed to provide reasonable protection against harmful interference in a residential installation. This equipment generates, uses, and can radiate radio frequency energy and, if not installed and used in accordance with the instructions, may cause harmful interference to radio communications. However, there is no guarantee that interference will not occur in a particular installation. If this equipment does cause harmful interference to radio or television reception, which can be determined by turning the equipment off and on, the user is encouraged to try to correct the interference by one or more of the following measures:

- Reorient or relocate the receiving antenna.
- Increase the separation between the equipment and receiver.
- Connect the equipment into an outlet that is on a different circuit than the receiver.
- Consult the dealer or an experienced radio/TV technician for help.

Shielded interconnect cables must be employed with this equipment to ensure compliance with the pertinent RF emission limits governing this device.

Notice to Users of the US Telephone Network

This equipment complies with Part 68 of the FCC rules, and the requirements adopted by ACTA. On the bottom of this equipment is a label that contains, among other information, the FCC registration number and ringer equivalence number (REN) for this equipment; or a product identifier in the format US:AAAEQ##TXXXX. If requested, this information or number must be provided to the telephone company.

This equipment is designed to be connected to the telephone network or premises wiring using a standard jack type USOC RJ11C. A plug and jack used to connect this equipment to the premises wiring and telephone network must comply with the applicable FCC Part 68 rules and requirements adopted by the ACTA. A compliant telephone cord and modular plug is provided with this product. It is designed to be connected to a compatible modular jack that is also compliant.

The ringer equivalent number (REN) of this equipment is 0.0B as shown on the label. The REN is used to determine the number of devices that may be connected to a telephone line. Excessive RENs on a telephone may result in the devices not ringing in response to an incoming call. In most but not all areas, the sum of RENs should not exceed five (5.0). To be certain of the number of devices that may be connected to a line, as determined by the total RENs, contact the local telephone company.

If this equipment causes harm to the telephone network, the telephone company will notify you in advance that temporary discontinuance of service may be required. But if advance notice isn't practical, the telephone company will notify the customer as soon as possible. Also, you will be advised of your right to file a complaint with the FCC if you believe it is necessary.

The telephone company may make changes in its facilities, equipment, operations or procedures that could effect the operation of the equipment. If this happens the telephone company will provide advance notice in order for you to make necessary modifications to maintain uninterrupted service.

If trouble is experienced with this equipment, for repair or warranty information, please refer to the manual or contact Fujitsu Computer Systems Corporation, Customer Service. If the equipment is causing harm to the telephone network, the telephone company may request that you disconnect the equipment until the problem is resolved.

The equipment cannot be used on public coin service provided by the telephone company. Connection to party line service is subject to state tariffs. (Contact the state public utility commission, public service commission or corporation commission for information).

If your home has specially wired alarm equipment connected to the telephone line, ensure the installation of this computer does not disable your alarm equipment. If you have any questions about what will disable alarm equipment, consult your telephone company or a qualified installer.

The Telephone Consumer Protection Act of 1991 makes it unlawful for any person to use a computer or other electronic device to send any message via a telephone fax machine unless such message clearly contains in a margin at the top or bottom of each transmitted page or on the first page of the transmission, the date an time it is sent and an identification of the business or other entity, or other individual sending the message and the telephone number of the sending machine or such business, other entity, or individual.

DOC (INDUSTRY CANADA) NOTICES

Notice to Users of Radios and Television

This Class B digital apparatus meets all requirements of Canadian Interference-Causing Equipment Regulations.

CET appareil numérique de la class B respecte toutes les exigence du Réglement sur le matérial brouilleur du Canada.

Notice to Users of the Canadian Telephone Network

NOTICE: This equipment meets the applicable Industry Canada Terminal Equipment Technical Specifications. This is confirmed by the registration number. The abbreviation, IC, before the registration number signifies that registration was performed based on a Declaration of Conformity indicating that Industry Canada technical specifications were met. It does not imply that Industry Canada approved the equipment.

Before connecting this equipment to a telephone line the user should ensure that it is permissible to connect this equipment to the local telecommunication facilities. The user should be aware that compliance with the certification standards does not prevent service degradation in some situations.

Repairs to telecommunication equipment should be made by a Canadian authorized maintenance facility. Any repairs or alterations not expressly approved by Fujitsu or any equipment failures may give the telecommunication company cause to request the user to disconnect the equipment from the telephone line.

NOTICE: The Ringer Equivalence Number (REN) for this terminal equipment is 0.0. The REN assigned to each terminal equipment provides an indication of the maximum number of terminals allowed to be connected to a telephone interface. The termination on an interface may consist of any combination of devices subject only to the requirement that the sum of the Ringer Equivalence Numbers of all the devices does not exceed five.

For safety, users should ensure that the electrical ground of the power utility, the telephone lines and the metallic water pipes are connected together. Users should NOT attempt to make such connections themselves but should contact the appropriate electric inspection authority or electrician. This may be particularly important in rural areas.

Avis Aux Utilisateurs Du Réseau Téléphonique Canadien

AVIS: Le présent matériel est conforme aux spécifications techniques d'Industrie Canada applicables au matériel terminal. Cette conformité est confirmée par le numéro d'enregistrement. Le sigle IC, placé devant le numéro d'enregistrement, signifie que l'enregistrement s'est effectué conformément à une déclaration de conformité et indique que les spécifications techniques d'Industrie Canada ont été respectées. Il n'implique pas qu'Industrie Canada a approuvé le matériel.

Avant de connecter cet équipement à une ligne téléphonique, l'utilisateur doit vérifier s'il est permis de connecter cet équipement aux installations de télécommunications locales. L'utilisateur est averti que même la conformité aux normes de certification ne peut dans certains cas empêcher la dégradation du service.

Les réparations de l'équipement de télécommunications doivent être eVectuées par un service de maintenance agréé au Canada. Toute réparation ou modification, qui n'est pas expressément approuvée par Fujitsu, ou toute défaillance de l'équipement peut entraîner la compagnie de télécommunications à exiger que l'utilisateur déconnecte l'équipement de la ligne téléphonique.

AVIS: L'indice d'équivalence de la sonnerie (IES) du présent matériel est de 0.0. L'IES assigné à chaque dispositif terminal indique le nombre maximal de terminaux qui peuvent être raccordés à une interface téléphonique. La terminaison d'une interface peut consister en une combinaison quelconque de dispositifs, à la seule condition que la somme d'indices d'équivalence de la sonnerie de tous les dispositifs n'excède pas 5.

Pour assurer la sécurité, les utilisateurs doivent vérifier que la prise de terre du service d'électricité, les lignes télphoniques et les conduites d'eau métalliques sont connectées ensemble. Les utilisateurs NE doivent PAS tenter d'établir ces connexions eux-mêmes, mais doivent contacter les services d'inspection d'installations électriques appropriés ou un électricien. Ceci peut être particulièrement important en régions rurales.

UL Notice

This unit requires an AC adapter to operate. Use only UL Listed Class 2 Adapters with an output rating of 19 VDC, with a current of 3.16 A.

AC Adapter output polarity:

The modem-to-telephone network connection must be a line cord using a minimum #26 AWG wire.

For Authorized Repair Technicians Only

- For continued protection against risk of fire, replace only with the same type and rating fuse.
- Danger of explosion if Lithium (clock) battery is incorrectly replaced. Replace only with the same or equivalent type recommended by the manufacturer. Dispose of used batteries according to the manufacturer's instruction.

System Disposal

Hg LAMP(S) INSIDE THIS PRODUCT CONTAIN MERCURY AND MUST BE RECYCLED OR DISPOSED OF ACCORDING TO LOCAL, STATE, OR FEDERAL LAWS.

Appendix

Integrated Wireless LAN* User's Guide

* Optional device

FCC REGULATORY INFORMATION

Please note the following regulatory information related to the wireless LAN device.

Regulatory Notes and Statements
Wireless LAN, Health and Authorization for use

Radio frequency electromagnetic energy is emitted from Wireless LAN devices. The energy levels of these emissions, however, are far much less than the electromagnetic energy emissions from wireless devices such as mobile phones. Wireless LAN devices are safe for use by consumers because they operate within the guidelines found in radio frequency safety standards and recommendations. The use of Wireless LAN devices may be restricted in some situations or environments, such as:

On board an airplane, or

In an explosive environment, or

In situations where the interference risk to other devices or services is perceived or identified as harmful.

In cases in which the policy regarding use of Wireless LAN devices in specific environments is not clear (e.g., airports, hospitals, chemical/oil/gas industrial plants, private buildings), obtain authorization to use these devices prior to operating the equipment.

Regulatory Information/Disclaimers

Installation and use of this Wireless LAN device must be in strict accordance with the instructions included in the user documentation provided with the product. Any changes or modifications made to this device that are not expressly approved by the manufacturer may void the user's authority to operate the equipment. The manufacturer is not responsible for any radio or television interference caused by unauthorized modification of this device, or the substitution or attachment of connecting cables and equipment other than those specified by the manufacturer. It is the responsibility of the user to correct any interference caused by such unauthorized modification, substitution or attachment. The manufacturer and its authorized resellers or distributors will assume no liability for any damage or violation of government regulations arising from failure to comply with these guidelines.

This device must not be co-located or operated in conjunction with any other antenna or transmitter.

For Atheros and Intel PRO Set Wireless LAN:

For operation within 5.15~5.25 GHz frequency range, it is restricted to indoor environments, and the antenna of this device must be integral.

Federal Communications Commission statement

This device complies with Part 15 of FCC Rules.

Operation is subject to the following two conditions: (1) This device may not cause interference, and, (2) This device must accept any interference, including interference that may cause undesired operation of this device.

FCC Interference Statement

This equipment has been tested and found to comply with the limits for a Class B digital device, pursuant to Part 15 of the FCC Rules. These limits are designed to provide reasonable protection against harmful interference in a residential installation. This equipment generates, uses, and can radiate radio frequency energy. If not installed and used in accordance with the instructions, it may cause harmful interference to radio communications. However, there is no guarantee that interference will not occur in a particular installation.

If this equipment does cause harmful interference to radio or television reception, which can be determined by turning the equipment off and on, the user is encouraged to try and correct the interference by one or more of the following measures:

1. Reorient or relocate the receiving antenna.
2. Increase the distance between the equipment and the receiver.
3. Connect the equipment to an outlet on a circuit different from the one the receiver is connected to.
4. Consult the dealer or an experienced radio/TV technician for help.

FCC Radio Frequency Exposure statement

This equipment complies with FCC radiation exposure limits set forth for an uncontrolled environment. This equipment should be installed and operated with a minimum distance of 20 cms from the WLAN antennas located on the top edge of the LCD screen. The Bluetooth antenna is located on the right hinge of the LCD screen and is exempt from minimum distance criteria due to its low power. The transmitters in this device must not be co-located or operated in conjunction with any other antenna or transmitter.

Export restrictions

This product or software contains encryption code which may not be exported or transferred from the US or Canada without an approved US Department of Commerce export license. This device complies with Part 15 of FCC Rules., as well as ICES 003 B / NMB 003 B. Operation is subject to the following two conditions: (1) this device may not cause harmful interference, and (2) this device must accept any interference received, including interference that may cause undesirable operation. Modifications not expressly authorized by Fujitsu PC Corporation may invalidate the user's right to operate this equipment.

Canadian Notice

To prevent radio interference to the licensed service, this device is intended to be operated indoors and away from windows to provide maximum shielding. Equipment (or its transmit antenna) that is installed outdoors is subject to licensing.

High power radars are allocated as primary users of 5250 - 5350 MHz and 5650 - 5850 MHz and these radars cause interference and/or damage to LELAN (license exempt LAN) devices operating in these bands.

Before Using the Wireless LAN

This manual describes the procedures required to properly setup and configure the integrated Wireless LAN Mini-PCI device (referred to as "WLAN device" in the rest of the manual). Before using the WLAN device, read this manual carefully to ensure it's correct operation. Keep this manual in a safe place for future reference.

Wireless LAN Devices Covered by this Document

This document is applicable to systems containing one of the following two devices. Most of the procedures are identical. Sections that differ between the two devices have been noted in the text:

Intel PROSet Wireless LAN (WM3B2915ABG and WM3B2200BG)

Atheros Wireless LAN (WLL4030)

If your system is an E8020, your wireless module is the Intel PROSet wireless LAN; if your system is an E8020D, your wireless module is the Atheros wireless LAN.

Characteristics of the WLAN Device

The WLAN device is a Mini-PCI card attached to the mainboard of the mobile computer.

It is a dual-band radio that operates in two license-free RF bands, therefore eliminating the need to procure an FCC license to operate. It operates in the 2.4GHz Industrial, Scientific, and Medical (ISM) RF band. Additionally, the Atheros device operates in the lower and middle bands of the 5GHz Unlicensed National Information Infrastructure (UNII) bands.

The Atheros WLAN is capable of three operating modes, IEEE802.11a, IEEE802.11b and IEEE802.11g, wireless LAN standards governed by the IEEE (Institute of Electronics and Electrical Engineers). The Intel WLAN is capable of two operating modes, IEEE802.11b and IEEE802.11g.

Encoding of data is modulated using Direct Sequence Spread Spectrum (DSSS) and Complementary Code Keying (CCK) when the WLAN device is operating in IEEE 802.11b mode and Orthogonal Frequency Division Multiplexing (OFDM) when operating in IEEE802.11a or IEEE802.11g mode.

The WLAN device is Wi-Fi certified and operates at the maximum data transfer rate of 54 Mbps in IEEE802.11a or IEEE802.11g mode and 11 Mbps in IEEE802.11b mode.

The maximum communication range indoors is approximately 80 feet (25 meters). However, that range will increase or decrease depending on factors such as number of walls, reflective material, or interference from external RF sources.

The WLAN device supports the following encryption methods - WEP, TKIP, and AES encryption.

WIRELESS LAN MODES USING THIS DEVICE

Ad Hoc Mode

(See Figure 5-1)

"Ad Hoc Mode" refers to a wireless network architecture where wireless network connectivity between multiple computers is established without a central wireless network device, typically known as Access Point(s). Connectivity is accomplished using only client devices in a peer-to-peer fashion. That is why Ad Hoc networks are also known as peer-to-peer networks. Ad Hoc networks are an easy and inexpensive method for establishing network connectivity between multiple computers.

Ad Hoc mode requires that the SSID, network authentication, and encryption key settings are identically configured on all computers in the Ad Hoc network.

Figure 5-1. Ad Hoc Mode Network

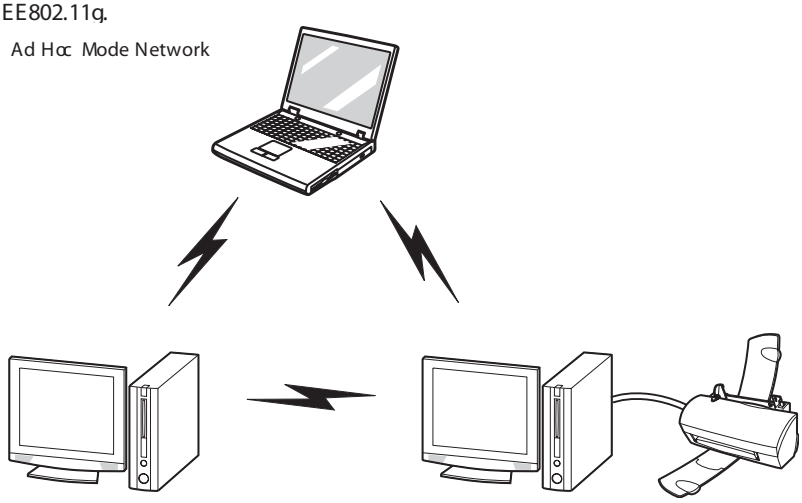

Access Point (Infrastructure) Mode

(See Figure 5-2)

Infrastructure mode refers to a wireless network architecture in which devices communicate with wireless or wired network devices by communicating through an Access Point. In infrastructure mode, wireless devices can communicate with each other or can communicate with a wired network. Corporate wireless networks operate in infrastructure mode because they require access to the wired LAN in order to access computers, devices, and services such as file servers, printers, and databases.

How to Handle This Device

The WLAN device comes pre-installed in your mobile computer. Under normal circumstances, it should not be necessary for you to remove or re-install it. The Operating System that your mobile computer comes with has been pre-configured to support the WLAN device.

WIRELESS NETWORK CONSIDERATIONS

- The Intel WLAN device is a dual-mode wireless network card (supports IEEE802.11b/g); the Atheros device supports IEEE802.11a/b/g.
- The Intel WLAN device operates in the 2.4GHz ISM band; the Atheros WLAN device also operates in the 5 GHz lower and middle UNII bands.
- The maximum range of the WLAN device indoors is typically 80 feet (25 meters). Please note that the maximum range you achieve may be shorter or longer than 80 feet, depending on factors such as access point transmit power, number and density of obstructions, or external RF interference.
- Microwave ovens will interfere with the operation of WLAN device as microwave ovens operate in the same 2.4GHz frequency range that IEEE802.11b/g devices operate in. Interference by microwaves does not occur with IEEE802.11a radio which operates in the 5 GHz RF band.
- Wireless devices that transmit in the 2.4GHz frequency range may interfere with the operation of WLAN devices in IEEE802.11b/g modes. Symptoms of interference include reduced throughput, intermittent disconnects, and large amounts of frame errors. It is HIGHLY recommended that these interfering devices be powered off to ensure the proper operation of the WLAN device.

DEACTIVATING THE WLAN DEVICE

Deactivation of the WLAN device may be desired in certain circumstances (to extend battery life) or where certain environments require it (i.e. hospitals, clinics, airplanes, etc.). Fujitsu mobile computers employ two methods with which to deactivate the WLAN device, 1) the Wireless On/Off Switch and 2) in Windows using the Intel PROSet Software or Atheros Client Utility software.

Deactivation using the Wireless On/Off Switch

The WLAN device can be deactivated quickly and efficiently by toggling the Wireless On/Off Switch to the Off position. *(Figure 5-3)*

Figure 5-2. Access Point (Infrastructure) Mode Network

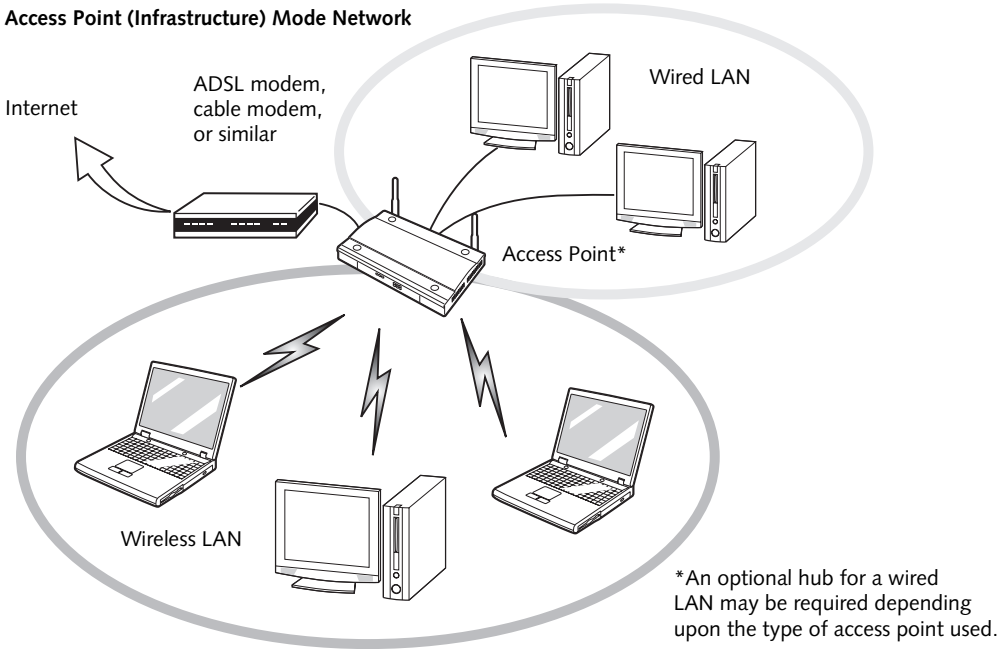

The Wireless On/Off switch has no effect on non-Wireless LAN models.

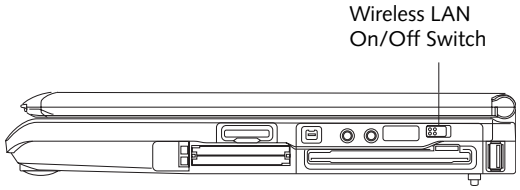

Figure 5-3. Wireless LAN On/Off Switch Location

Deactivation using the Intel PROSet Software

The WLAN device can also be deactivated in Windows using the Intel PROSet Software. The procedure to accomplish this:

1. Click [Start]-> [Control Panel].
2. If the Control Panel is in Category view, switch to Classic view by clicking "Switch to Classic View" which can be found in the left frame of the Control Panel window.
3. Double-click on the Intel PROSet for Wireless icon which will execute the Intel PROSet application.
4. Select the General tab if it is not already selected.
5. Check the Off radio button next to "Switch radio:" then click the [OK] button.

Deactivation using Atheros Client Utility software

1. Click [Start] -> [Program Files] -> [Atheros] -> Atheros Client Utility.
2. Choose Action and click Disable Radio.

ACTIVATING THE WLAN DEVICE

Activation of the WLAN device can be accomplished using the same methods as the deactivation process

- Using the Wireless On/Off Switch
- In Windows using the Intel PROSet Software or Atheros Software

Configuration of the WLAN Device

The WLAN Device can be configured to establish wireless network connectivity using one of the following tools:

- Windows XP Wireless Zero Configuration (WZC) - The WZC allows for multiple profile setup and support for most industry standard security solutions.
- Intel PROSet Software - The Intel PROSet Software allows for multiple profile setup and supports automatic profile switching. Support for most industry standard security solutions as well as Cisco Compatible Extensions (CCX) is contained in this software.
- Atheros Client Utility - The Atheros Client Utility software allows for multiple profile setups and supports automatic profile switching. Support for most industry standard security solutions, as well as Cisco Compatible Extensions (CCX), is contained in this software.

FLOW OF OPERATIONS

1. Activate the WLAN Device (See Activating the WLAN Device on page 98 for more information).
2. Configure the Wireless Network parameters (See Configure Wireless Network Parameters on page 100 for more information).
   - Enter the network name (SSID)
   - Choose the appropriate WLAN architecture (Ad Hoc or Infrastructure)
   - Choose Authentication method: Open, Shared, WPA, or WPA-PSK
   - If using static WEP keys, enter static WEP key and choose key index.
3. Configure network settings (See Configure Network Parameters on page 100 for more information)
   - TCP/IP settings
   - Workgroup or Domain settings.

CONFIGURATION USING WIRELESS ZERO CONFIGURATION TOOL

This section explains the procedure to properly configure the WLAN device using the WZC. Pre-defined parameters will be required for this procedure. Please consult with your network administrator for these parameters:

Network Name - Also known as the SSID

Network Key (WEP) - Required if using static WEP keys.

Authentication Type - Open, Shared, WPA, or WPA-PSK

Procedure

1. Activate the WLAN device using the Wireless On/Off Switch, the Intel PROSet software, or the Atheros Client Utility.
2. Click the [Start] button first and then [Control Panel].
3. If the Control Panel is in Category view, switch to Classic view by clicking "Switch to Classic View" which can be found in the left frame of the Control Panel window.
4. Double-click the Network Connections icon. A list of previously configured networks will be displayed.
5. Right-click [Wireless Network Connection] in the list, and then click [Properties] in the menu displayed.
6. Click the [Wireless Networks] tab.
7. Click [Refresh], then choose the correct SSID from the [Available Networks] window. Click [Configure] and proceed to step 8. Please note that only wireless networks that broadcast their SSID will be displayed. If the SSID of the wireless network is not visible, you must manually add it. This can be accomplished by clicking [Add]
8. From within the Association tab configure the appropriate WLAN parameters. Please have ready the following parameters:
   - Network name (SSID) - ASCII string of up to 33 characters used by the WLAN to logically separate wireless networks.
   - Authentication Type - Options include Open, Shared, WPA, or WPA-PSK
   - Network Key - If Authentication Type is Open or Shared, choices are None or WEP. If Authentication Type is WPA or WPA-PSK, choices are WEP or TKIP.

   Ad Hoc Networks: All computers in an Ad Hoc network must be assigned with the same SSID and

the checkbox for the field [This is a computer to computer (ad hoc) network, wireless access points are not used.] must be checked.

Access Point (Infrastructure) Networks: The SSID must be identical to the SSID of the access point(s) and the checkbox for the following field must be unchecked [This is a computer to computer (ad hoc) network wireless access points are not used.] Refer to the access point manual, or contact your network administrator

9. Configure Wireless Network Key parameters (Network Authentication and Encryption).

   a. Choose the Network Authentication method appropriate for your wireless LAN. Options include Open, Shared, WPA, and WPA-PSK.

      Ad Hoc Networks: Network Authentication settings must be identical for all computers in the Ad Hoc network.

      Access Point (Infrastructure Networks): Network Authentication setting must be configured to match the setting of the Access Point(s). Please contact your network administrator for this information.

   b. Choose the Encryption method appropriate for your wireless LAN. Options for Open or Shared Authentication are None or WEP. Options for WPA or WPA-PSK are WEP or TKIP.

   c. If using static WEP keys, clear the check mark from the [The key is provided for me automatically] check box. If using an authentication method that uses dynamic WEP (e.g., WPA, WPA-PSK, 802.1x/EAP), the check box should remain checked. Please contact your network administrator for the correct settings.

   d. Static WEP keys (if applicable) are entered in the [Network Key] box. Configuration of the [Network Key] is not required if the [The key is provided for me automatically] check box is checked.

      - Static WEP keys entered in ASCII code format will be either five characters (40-bit) or thirteen characters (104-bit) in length. Valid characters are 0 - 9, A - Z.
      - Static WEP keys entered in hexadecimal code format will be either ten characters (40-bit) or twenty-six characters (104-bit) in length. Valid characters are 0 - 9, A - F.

      Ad Hoc Networks: Assign the same net-work key to all the personal computers to be connected.

      Access Point (Infrastructure) Networks: Assign the identical network key that is programmed into the access point. Please contact your network administrator for this information.

   e. If using static WEP keys, confirm the Network key by re-entering the same data in the [Confirm network key:] field.

   f. The Key index used must be identical to the transmit key used in the Access Point or other wireless device. This is only applicable when static WEP keys are used. Please contact your network administrator for this information.

10. **Access Point (Infrastructure) Networks Only**: If the wireless network you are establishing connectivity to implements an access control security mechanism, configuration of 802.1x parameters may be necessary. Please contact your network administrator for these settings. Configuration of these parameters is not applicable to home users.

11. Click [OK] to close the [Wireless Network] window which will cause the WLAN device to re-establish wireless network connectivity using the recently configured parameters.

CONFIGURATION USING INTEL PROSET SOFTWARE

This section explains the procedure to properly configure the WLAN device using the Intel PROSet Software. Pre-defined parameters will be required for this procedure. Please consult with your network administrator for these parameters:

Network Name - Also known as the SSID

Network Key (WEP) - Required if using static WEP keys.

Authentication Type - Open, Shared, WPA, or WPA-PSK

Procedure

1. Activate the WLAN device using either the Wireless On/Off Switch or the Intel PROSet software.
2. Click the [Start] button first and then [Control Panel].
3. If the Control Panel is in Category view, switch to Classic view by clicking "Switch to Classic View" which can be found in the left frame of the Control Panel window.
4. Double-click the icon [Intel PROSet] to execute the Intel PROSet Software.
5. From the General page, click the Networks tab.

6. Click the [Add] button. The General Settings dialog displays.
7. From the General page, click the Networks tab.
8. Click the [Add] button. The General Settings dialog displays.
9. Enter a profile name in the Profile Name field.
10. Enter the network SSID, in the Network Name (SSID) field.
11. Click Infrastructure or Ad Hoc for the operating mode.
12. The Mandatory AP option is only used if Infrastructure mode is selected. Use this option to connect to a specific access point. Click the Mandatory AP button, enter the MAC address for the access point. Click OK to save the setting and return to the General Settings page.
13. If you are using Cisco CCX, click the Enable Cisco Client eXtentions option to enable Cisco CKIP data encryption on the Security Settings page. If you have checked the Cisco's "Mixed-Cell" box in the Advanced Setting, this option must also be checked.
14. Click Next.
15. Click the Security tab
16. Select Open, Shared, WPA, or WPA-PSK in the Network Authentication options.
17. Select either None, WEP, CKIP (if Enable Cisco Client eXtentions is enabled on the General Settings page), or TKIP for the data encryption.
18. If WEP is selected, select either 64 or 128-bit for the Encryption Level.
19. Select the key index 1, 2, 3 or 4.
20. Enter the WEP key if required. If your network does not employ a 802.1x/EAP security mechanism, please skip to step 24.
21. Click the 802.1x Enabled checkbox to enable the 802.1x security option. Please contact your network administrator if configuration of this setting is required.
22. Select the appropriate 802.1x/EAP Type. Please contact your network administrator if configuration of this setting is required.
23. After selecting your authentication type, click the Configure button to open the Settings dialog. Enter the user name and password of the user you have created on the authentication server. The user name and password do not have to be the same as name and password of your current Windows user login. The "Server Identity" can be use the default setting. The "Client Certificate" should be the one obtained from your RADIUS server or other certification server.
24. Click Close to save the settings.
25. From the General settings page, click the new profile name shown in the Profile List. Use the up and down arrows to position the priority of the new profile in the priority list.
26. Click the Advanced button to set the network connection preferences.
27. Click the Connect button to connect to the network.
28. Click OK to close the Intel(R) PROSet for Wireless utility

CONFIGURATION USING ATHEROS CLIENT UTILITY SOFTWARE

This section explains the procedure to properly configure the WLAN device using the Atheros Client Utility. Pre-defined parameters will be required for this procedure. Please consult with your network administrator for these parameters:

Network Name - Also known as the SSID

Network Key (WEP) - Required if using static WEP keys.

Authentication Type - Open, Shared, WPA, or WPA-PSK

Procedure

1. Activate the WLAN device using either the Wireless On/Off Switch or the Atheros Client Utility
2. Click the [Start] button first and then [Control Panel].
3. If the Control Panel is in Category view, switch to Classic view by clicking "Switch to Classic View" which can be found in the left frame of the Control Panel window.
4. Double-click the icon [Atheros Client Utility] to execute the Atheros Client Utility.
5. From the Current Status page, click the Profile Management tab.
6. If this is your first time using this utility, highlight the profile [Default] and Click the [Modify] button, otherwise Click the [New] button. The General Settings dialog displays.
7. From the General page, enter a profile name in the Profile Name field.

8. Enter the network SSID, in the SSID1 field. If you wish to create a profile that can connect to up to 3 different wireless networks, SSID's can be entered in the SSID2 and SSID3 fields as well.

9. Click the Security tab.

10. The Security tab allows for the configuration of the Security modes listed in the table below. Please select the radio button of the desired security mode. If these settings are not known to you, please consult with your network administrator for the correct settings.

Field Name	Description
WPA	Enables the use of Wi-Fi Protected Access. Choosing WPA opens the WPA EAP drop-down menu. Options include TLS and PEAP. If these settings are not known to you, please consult with your network administrator for the correct settings.
WPA-PSK	Enables WPA-Pre-Shared Key. Click on the Configure button to enter the WPA Passphrase. If these settings are not known to you, please consult with your network administrator for the correct settings.
802.1x	Enables 802.1x security. If these settings are not known to you, please consult with your network administrator for the correct settings. Choosing this option opens the 802.1x EAP type drop-down menu. Options include TLS, PEAP, and LEAP
Pre-Shared Key	Enables the use of pre-shared keys that are defined on both the access point and the station. This is where static WEP keys are entered. Click the Configure button to fill in the Define Pre-Shared Keys window.
None	No security

11. Click OK

12. Click the Advanced tab

13. The Advanced tab allows for the configuration of the options detailed in the table below.

Field Name	Description
Power Save Mode	Options are Maximum, Normal, or Off
Network Type	Options are AP (Infrastructure) or Ad Hoc
802.11b Preamble	Specifies the preamble setting in 802.11b. The default setting is Short and Long (Access Point mode), which allows both short and long headers in the 802.11b frames. Set to Long Only to override allowing short frames.
Transmit Power Level	Options are 100%, 50%, 25%, 12.5% or Lowest transmit power (0mW)
Wireless Mode	Specifies 5 GHz 54 Mbps, 5 GHz 108 Mbps, 2.4 GHz 11 Mbps, or 2.4 GHz 54 Mbps operation in an access point network.
Wireless Mode when Starting Ad Hoc Network	Specifies 5GHz 54 Mbps, 5 GHz 108 Mbps, 2.4 GHz 11 Mbps, or 2.4 GHz 54 Mbps to start an Ad Hoc network if no matching network name is found after scanning all available modes.

14. Click OK

15. If the profile you just created does not activate immediately, click the Profile Management tab, highlight the desired Profile, and click Activate.

16. Click OK to close the Atheros Client Utility.

CONNECTION TO THE NETWORK

This section explains connection to the network.

If there is an administrator of the network, contact the network administrator for data settings.

Setting the network

Perform the "Setting TCP/IP" and "Confirming the computer and work group names" operations required for network connection.

Setting TCP/IP

To change the setting of the IP address, you need to be logged in from Windows as an administrator.

1. Click the [Start] button first and then [Control Panel].
2. If the Control Panel is in Category view, switch to Classic view by clicking "Switch to Classic View" under Control Panel the left frame. (If you are already in Classic view, "Switch to Category View" will be displayed.)
3. Double-click [Network Connections]. A list of currently installed networks will be displayed.
4. Right-click [Wireless Network Connection] in the list, and then click [Properties] in the menu displayed. The [Wireless Network Connection Properties] window will be displayed.
5. Click the [General] tab if it is not already selected.
6. Click [Internet Protocol (TCP/IP] and then click [Properties]. The [Internet Protocol (TCP/IP) Properties] window will be displayed.
7. Set the IP address as follows:
   - **For ad hoc connection**: Select [Use the following IP address:] and then enter data for [IP address] and [Subnet mask]. See page 109 for IP address setting.
   - **For access point (infrastructure) connection:** If your network uses DHCP, select [Obtain an IP address automatically] and [Obtain DNS server address automatically]. If your network uses static IP addresses, consult with your network administrator for the correct IP address settings.
8. Click the [OK] button. Processing will return to the [Wireless Network Connection Properties] window.
9. Click the [OK] button.
10. Close the [Network Connection] window.

Following this operation, confirm the names of the computer and the workgroup as follows.

Confirming the computer and work group names

To modify the computer name and/or the work group name, you need to be logged in from Windows as an administrator.

1. Click the [Start] button, then [Control Panel].
2. If the Control Panel is in Category view, switch to Classic view by clicking "Switch to Classic View" under Control Panel the left frame. (If you are already in Classic view, "Switch to Category View" will be displayed.)
3. Double-click the [System] icon. The [System Properties] window will be displayed.
4. Click the [Computer Name] tab.
5. Confirm the settings of [Full computer name:] and [Workgroup:].

   a. The setting of [Full computer name:] denotes the name for identifying the computer. Any name can be assigned for each personal computer.

   To change the name, click [Change] and then proceed in accordance with the instruction messages displayed on the screen.

   Enter the desired name in less than 15 ASCII character code format. Identifiability can be enhanced by entering the model number, the user name, and other factors.

   b. [Workgroup name] is the group name of the network. Enter the desired name in less than 15 ASCII character code format.

   For ad hoc connection: Assign the same network name to all personal computers existing on the network.

   For access point (infrastructure) connection: Assign the name of the work group to be accessed.
6. Click the [OK] button. If a message is displayed that requests you to restart the personal computer, click [Yes] to restart the computer.

Setting the sharing function

Set the sharing function to make file and/or printer sharing with other network-connected personal computers valid.

This operation is not required unless the sharing function is to be used.

The folder and printer for which the sharing function has been set will be usable from any personal computer present on the network.

To share a file and/or the connected printer, you need to be logged in as an administrator.

Setting the Microsoft network-sharing service

1. Click the [Start] button first and then [Control Panel].
2. If the Control Panel is in Category view, switch to Classic view by clicking "Switch to Classic View" under Control Panel the left frame. (If you are already in Classic view, "Switch to Category View" will be displayed.)
3. Double-click [Network Connections]. A list of currently installed networks will be displayed.
4. Right-click [Wireless Network Connection] in the list, and then click [Properties] in the menu displayed. The [Wireless Network Connection Properties] window will be displayed.
5. **If [File and Printer Sharing for Microsoft Networks] is displayed, proceed to step 6**. If [File and Printer Sharing for Microsoft Networks] is not displayed, skip to step 7.
6. Make sure that the [File and Printer Sharing for Microsoft Networks] check box is checked, and then click the [OK] button. Skip to "Setting file-sharing function".
7. Click [Install]. The [Select Network Component Type] window will be displayed.
8. Click [Service], then click the [Add] button. The [Select Network Service] window will be displayed.
9. Click [File and Printer Sharing for Microsoft Networks] and then click the [OK] button. Processing will return to the [Wireless Network Connection Properties] window, and [File and Printer Sharing for Microsoft Networks] will be added to the list.
10. Click the [Close] button.

Setting the file-sharing function

The procedure for setting the file-sharing function follows, with the "work" folder in drive C: as an example.

1. Click the [Start] button first and then [My Computer].
2. Double-click [Local disk (C:)].
3. Right-click the "work" folder (or whichever folder you want to share), and then click [Sharing and Security...] in the menu displayed. The [*Folder Name* Properties] window will be displayed.

Setting the file-sharing function for the file which has been used to execute Network Setup Wizard is suggested on the screen. For the wireless LAN, however, since security is guaranteed by entry of the network name (SSID) and the network key, the steps to be taken to set the file-sharing function easily without using Network Setup Wizard are given below.

4. Click [Sharing] if it isn't already selected.
5. Click the link stating "If you understand the security risks, but want to share files without running the wizard, click here".
6. Click "Just enable file sharing" and click [OK].
7. Check the [Share this folder on the network] check box.

To specify the corresponding folder as a read-only folder, select the [Read only] checkbox under the General tab.

8. Click the [OK] button. The folder will be set as a sharable folder, and the display of the icon for the "work." folder will change.

Setting the printer-sharing function

1. Click the [Start] button first and then [Printers and FAX]. A list of connected printers will be displayed.
2. Right-click the printer for which the sharing function is to be set, and then click [Sharing] in the menu displayed. The property window corresponding to the selected printer will be displayed.

Setting the printer-sharing function when Network Setup Wizard has been executed is suggested on the screen. For the wireless LAN, however, since security is guaranteed by entry of the network name (SSID) and the network key, the steps to be taken to set the printer-sharing function without using Network Setup Wizard are laid down below.

3. Click the [Sharing] tab.
4. Click [Share this printer].
5. Enter the sharing printer name in [Share name].
6. Click the [OK] button.

Confirming connection

After you have finished the network setup operations, access the folder whose sharing has been set for other personal computers. Also, confirm the status of the radio waves in case of trouble such as a network connection failure.

> In the case of access point (infrastructure) connection, enter the necessary data for the access point before confirming connection. Refer to the manual of the access point for the access point setup procedure.

Connecting your personal computer to another personal computer

1. Click [Start] first and then [My Computer]. The [My Computer] window will be displayed in the left frame.
2. Click [My Network Places] in the "Other Places" list. The window [My Network Places] will be displayed.
3. Click [View workgroup computers] under Network Tasks in the left frame.
4. Double-click the personal computer to which your personal computer is to be connected. The folder that was specified in "Setting the file-sharing function" on page 104 will be displayed.
5. Double-click the folder to be accessed.

Confirming the status of the radio

1. Right-click the Intel PRO Wireless icon in the lower right corner of the screen.
2. Click [Open Intel PROSet for Wireless]. The Intel PROSet for Wireless window opens.
3. Contained within the General tab and the Details section (accessed by pressing the [Details] button), you will find the current operating status of the radio. (When the radio is turned off or the computer is not yet connected, some of the conditions will not be displayed.)
   - **Network Name (SSID)**
     Displays the Network Name (SSID) currently used by the radio.
   - **Profile Name**
     The current configuration profile is displayed.
   - **Mode**
     Displays the current operating mode. [Infrastructure (AP)] or [Ad Hoc] will be displayed.
   - **Security**
     Displays the current security status of the profile being used:
     None: No encryption used.
     WEP: WEP encryption algorithm used.
     CKIP: WEP encryption algorithm used.
     TKIP: WEP encryption algorithm used.
   - **Speed**
     Displays the highest data rate of the associated access point in mega-bits-per-second (Mbps) until data transfer occurs.
     802.11g: 1, 2, 5.5, 6, 9, 11, 12, 18, 24, 36, 48, or 54.
     802.11b: 1, 2, 5.5, or 11.
   - **Band (Frequency)**
     Displays the current band and frequency being used. Displays Out of Range if no band and frequency is displayed. Displays:
     802.11g (2.4 GHz) or 802.11b (2.4 GHz)
   - **Channel**
     Displays the current transmit and receive channel being used.
   - **802.1x Protocol**
     Displays Enabled if the profile uses 802.1x authentication. Default is Disabled.

Troubleshooting

Causes and countermeasures for troubles you may encounter while using your wireless LAN are described in the following table.

Problem	Possible Cause	Possible Solution
Unavailable network connection	**Incorrect network name (SSID) or network key**	**Ad hoc connection:** verify that the network names (SSID's) and network keys (WEP) of all computers to be connected have been configured correctly. SSID's and WEP key values must be identical on each machine. **Access Point (Infrastructure) connection:** set the network name (SSID) and network key to the same values as those of the access point. Set the Network Authentication value identically to that of the Access Point. Please consult your network administrator for this value, if necessary. For the method of setting network authentication, refer to the following page:·"Assigning parameters" on page 100·
	Weak received signal strength and/or link quality	Ad hoc connection: Retry connection after shortening the distance to the destination computer or removing any obstacles for better sight. Access Point (Infrastructure) connection: Retry connection after shortening the distance to the access point or removing any obstacles for better sight. To check the wave condition, refer to the following page:· "Confirming the status of the radio waves" on page 105.
	The WLAN device has been deactivated or disabled	Check if the wireless switch is turned ON. Also verify "Disable Radio" is not checked in "Network setting" window. Refer to "Starting Transmission" on page 98.
	The computer to be connected is turned off	Check if the computer to be connected is turned ON.
	RF interference from Access Points or other wireless networks	The use of identical or overlapping RF channels can cause interference with the operation of the WLAN device. Change the channel of your Access Point to a channel that does not overlap with the interfering device.
	Wireless network authentication has failed	Re-check your Network Authentication, Encryption, and Security settings. Incorrectly configured security settings such as an incorrectly typed WEP key, a mis-configured LEAP username, or an incorrectly chosen authentication method will cause the LAN device to associate but not authenticate to the wireless network.
	Incorrectly configured network settings	Recheck the configuration of your network settings. For the method of checking, refer to the following page:·"Connection to the Network" on page 103.
	Incorrect IP address configuration	This only applies to networks using static IP addresses. Please contact your network administrator for the correct settings.

Wireless LAN Glossary

Ad Hoc Mode

Ad Hoc Mode refers to a wireless network architecture where wireless network connectivity between multiple computers is established without a central wireless network device, typically known as Access Points. Connectivity is accomplished using only client devices in a peer-to-peer fashion. For details, refer to "Ad hoc connection" on page 96.

Channel

Range of narrow-band frequencies used by the WLAN device to transmit data. IEEE802.11b/g - 11 channels, 22 MHz wide channels.

DHCP (Dynamic Host Configuration Protocol)

A protocol that provides a means to dynamically allocate IP addresses to computers on a local area network.

DNS (Domain Name System)

A data query service that provides a mechanism with which to translate host names into Internet addresses.

IEEE802.11a

Wireless LAN standard that supports a maximum data rate of 54 Mbps. 802.11a devices operate in the 5 GHz lower and middle UNII bands.

IEEE802.11b

Wireless LAN standard that supports a maximum data rate of 11 Mbps. 802.11b devices operate in the 2.4 GHz ISM band.

Access point

Wireless network device used to bridge wireless and wired network traffic.

IP address

The logical 32-bit host address defined by the Internet Protocol that uniquely identifies a computer on a network. The IP address is usually expressed in dotted decimal notation.

LAN (Local Area Network)

A LAN or Local Area Network is a computer network (or data communications network) which is confined to a limited geographical area.

MAC address (Media Access Control Address)

A MAC address (also called an Ethernet address or IEEE MAC address) is the 48-bit address (typically written as twelve hexadecimal digits, 0 through 9 and A through F, or as six hexadecimal numbers separated by periods or colons, e.g., 0080002012ef, 0:80:0:2:20:ef) which uniquely identifies a computer that has an Ethernet interface.

MTU (Maximum Transmission Unit)

The maximum size of data which can be transmitted at one time in networks including the Internet. In an environment whose maximum size of data is too large to correctly receive data, normal communications can be restored by setting the size of MTU to a smaller value.

Network key

Data that is used for encrypting data in data communication. The personal computer uses the same network key both for data encryption and decryption, therefore, it is necessary to set the same network key as the other side of communication.

Network name (SSID: Security Set Identifier)

When a wireless LAN network is configured, grouping is performed to avoid interference or data theft. This grouping is performed with "Network name (SSID)". In order to improve security, the network key is set allowing no communication unless "Network name (SSID)" coincides with the network key.

Open system authentication

Null authentication method specified in the 802.11 standard that performs no authentication checks on a wireless client before allowing it to associate.

PPPoE (Point to Point Protocol over Ethernet)

A method of allowing the authentication protocol adopted in telephone line connection (PPP) to be used over an Ethernet.

Protocol

A procedure or rule of delivering data among computers. Ordered data communication is allowed by making all conditions required for communication including the method of data transmission/reception and actions upon communication errors into procedures.

Shared key authentication

802.11 network authentication method in which the AP sends the client device a challenge text packet that the client must then encrypt with the correct WEP key and return to the AP. If the client has the wrong key or no key, authentication will fail and the client will not be allowed to associate with the AP. Shared key authentication is not considered secure, because a hacker who detects both the clear-text challenge and the same challenge encrypted with a WEP key can decipher the WEP key.

SSID (Service Set Identifier)

Service Set Identifier, a 32-character unique identifier attached to the header of packets sent over a WLAN that acts as a password when a mobile device tries to connect to the BSS. The SSID differentiates one WLAN from another, so all access points and all devices attempting to connect to a specific WLAN must use the same SSID. A device will not be permitted to join the BSS unless it can provide the unique SSID. Because the SSID is broadcast in plain text, it does not supply any security to the network.

Subnet mask

TCP-IP network is controlled by being divided into multiple smaller networks (subnets). IP address consists of the subnet address and the address of each computer. Subnet mask defines how many bits of IP address comprise the subnet address. The same value shall be set among computers communicating with each other.

TCP/IP (Transmission Control Protocol/Internet Protocol)

A standard protocol of the Internet.

Wi-Fi

Wi-Fi, or Wireless Fidelity, is a set of standards for wireless local area networks (WLAN) based on the IEEE 802.11 specifications. Certified products can use the official Wi-Fi logo, which indicates that the product is interoperable with any other product also showing that logo.

IP address information

IP addressing is much more complicated than can be briefly explained in this document. You are advised to consult with your network administrator for additional information.

If IP address is unknown, set IP address as follows:

If you have an access point (DHCP server) on the network, set the IP address as follows:

[Obtain an IP address automatically]

A DHCP server is a server that automatically assigns IP addresses to computers or other devices in the network. There is no DHCP server for the AdHoc network.

If the IP address is already assigned to the computer in the network, ask the network administrator to check the IP address to be set for the computer.

If no access point is found in the network:

An IP address is expressed with four values in the range between 1 and 255.

Set the each computer as follows: The value in parentheses is a subnet mask.

<Example>

Computer A: 192.168.100.2 (255.255.255.0)

Computer B: 192.168.100.3 (255.255.255.0)

Computer C: 192.168.100.4 (255.255.255.0)

:

:

Computer X: 192.168.100.254 (255.255.255.0)

Specifications

Item	Specification
Type of network	Atheros WLAN device conforms to IEEE 802.11a/802.11b/g (Wi-Fi based)* Intel PRO Set WLAN device conforms to IEEE 802.11a/802.11b/g (WM3B2915ABG) and 802.11b/g(WM3B2100BG)(Wi-Fi based)*
Transfer rate	(Automatic switching) IEEE 802.11a/g: 54 Mbps maximum data rate IEEE 802.11b: 11 Mbps maximum data rate
Active frequency	802.11b/g: 2400~2473 MHz 802.11a: 4900 ~ 5850 MHz
Number of channels	802.11a: 8 independent channels 802.11b/g: 11 channels, 3 non-overlapping channels
Security	Encryption Types - WEP, TKIP, AES** WPA 1.0 compliant Encryption Keylengths Supported: 64 bits, 128 bits, and 152 bits (Atheros module using AES encryption only) 802.1x/EAP CCX 1.0 compliant
Maximum recommended number of computers to be connected over wireless LAN (during ad hoc connection)	10 units or less ***

* “Wi-Fi based” indicates that the interconnectivity test of the organization which guarantees the interconnectivity of wireless LAN (Wi-Fi Alliance) has been passed.

** Encryption with network key (WEP) is performed using the above number of bits, however, users can set 40 bits/104 bits after subtracting the fixed length of 24 bits.

*** Depending on practical environments, the allowable number of computers to be connected may be decreased.

Using the Bluetooth Device

The Integrated Bluetooth module (UGXZ5-102A) is an optional device available for Fujitsu mobile computers.

WHAT IS BLUETOOTH

Bluetooth technology is designed as a short-range wireless link between mobile devices, such as laptop computers, phones, printers, and cameras. Bluetooth technology is used to create Personal Area Networks (PANs) between devices in short-range of each other.

WHERE TO FIND INFORMATION ABOUT BLUETOOTH

The Bluetooth module contains a robust Help user's guide to assist you in learning about operation of the Bluetooth device.

To access the Help file, click [Start] -> All Programs, and click on Toshiba. Select Bluetooth, then select User's Guide.

For additional information about Bluetooth Technology, visit the Bluetooth Web site at: www.bluetooth.com.

FCC Radiation Exposure Statement

This equipment complies with FCC radiation exposure limits set forth for an uncontrolled environment.

The transmitters in this device must not be co-located or operated in conjunction with any other antenna or transmitter.

Canadian Notice

To prevent radio interference to the licensed service, this device is intended to be operated indoors and away from windows to provide maximum shielding. Equipment (or its transmit antenna) that is installed outdoors is subject to licensing.

Warranty

Users are not authorized to modify this product. Any modifications invalidate the warranty.

This equipment may not be modified, altered, or changed in any way without signed written permission from Fujitsu. Unauthorized modification will void the equipment authorization from the FCC and Industry Canada and the warranty.

E Series.book Page 117 Wednesday, April 14, 2004 10:28 AM

Index

A

About This Guide 1

AC
- adapter 27
- indicator 11
- plug adapters 71

ACPI 83

Active-Matrix Display 83

Anti-theft lock slot 8

Application Panel 20

Auto/Airline Adapter 27, 83

Automatically Downloading Driver Updates 67

B

Battery 37
- alarm 37
- bay 10
- care 72
- charging indicator 12
- cold-swapping 38
- conserving power 32
- dead 60
- faulty 60
- increasing life 72
- level indicators 11
- lithium ion battery 37, 85
- low 37
- problems 60, 61
- recharging 37
- replacing 38
- shorted 38
- suspend mode 37

BIOS 83
- guide 29
- setup utility 29

Bluetooth
- Using the Bluetooth Device 116
- Where to Find Information 116

Boot 83

Boot Sequence 29

Built-in Speakers 56

C

Cache Memory 83

CapsLock 12

CardBus 83

CD-ROM 39, 83
- problems 56, 57

Centrino 78

Clicking 15

CMOS RAM 83

Cold-swap 18

Cold-swapping 38

COMM Port 83

Configuration Label 10, 77

Connection using Atheros Client Utility 104

Control 40

Controls and Connectors 6

Conventions Used in the Guide 1

CRT 83

Cursor 15

Cursor Keys 13

D

DC Output Cable 27

DC Power Jack 27

Default Value 84

Device Ports 50, 78

DIMM 45, 84

Disk
- care 72

Display Panel 6, 28
- adjusting 28
- brightness 28
- closing 28
- latch 6
- opening 28
- power management 28
- problems 62

Display Timeout 33

DMA 84

DMI 84

Docking Port 51

Dolby Headphone 41

Double-Clicking 15

Dragging 16

Drive Image Special Edition (DISE) 66

Drivers and Application CD 67

DVD drive
access indicator 12
tray release 65

DVD/CD-RW combo 39

DVD/CD-RW/CD-ROM
access indicator 12

DVD/CD-RW/CD-ROM drive
problems 56, 57

DVD-RAM 39

E

ECP 84

Emergency tray release 8

Error Messages 64

Extended Memory 84

External Floppy Disk Drive 42
problems 57

External Monitor Port 7, 52

F

FDU 67

Flexible Bay 8, 18
cold-swapping 18
devices 18
eject lever 8
installing 18
removing 18

Floppy Disk
ejecting 42
formatting 42
initializing 42
loading 42
preparing 42
write protect 42

Fujitsu Contact Information 1

Fujitsu Driver Update utility 67

Fujitsu LifeBook
storing 71
traveling 71

Function Key
F3 14
F4 14
F6 14
F7 14
F8 . . . . . 14, 17
F9 . . . . . 14, 17
FN 14

H

Hard Disk Drive
access indicator 12
problems 57

Hard Disk Timeout 33

Headphone Jack 7, 52

Hibernation Feature 33
disable/enable 33

I

IDE 85

Infrared Port 9, 51

Internal LAN Jack 50

IrDA 51, 85

IRQ 85

K

Keyboard 6, 13
cursor keys 13
function keys 13
numeric keypad 13
problems 58
windows keys 13

L

LAN (RJ-45) Jack 9

LifeBook Security Application Panel
buttons 22
configuring 22
deactivating 23
deactivating and activating 23
launching applications 22
operating 21
passwords 20
uninstalling 21

LifeBook Security/Application Panel 6

M

Media Player
care 73
Control Panel 40
loading 39
removing 40
Software 39, 40
using 41

Media player
care 73

Memory

capacity 46
compartment 10, 45
installing 45
problems 58
removing 45, 46
upgrade module 45

Microphone Jack 7, 52

MIDI 86

Modem 8
problems 58

Modem Jack 50

Modem Result Codes 65

Modular Devices 18
installing 18
removing 18

Mouse
problems 58

MPU-401 86

N

NTSC 86

Numeric Keypad 13

NumLk 12

O

Optical Drive 39

P

Parallel Port 50, 86
problems 58, 59

PC Card
access indicator 12
care 73
installing 43
problems 59
removing 43
slot 7

PCMCIA 86

Pointing Device
See Touchpad 15

Port Replicator 47
attaching 48
back panel components 47
connector 10
detaching 49
problems 57

POST 86

Power
AC adapter 27
Auto/Airline adapter 27
failure 59, 60
indicator 11
management 32
off 33
on 29
problems 61
sources 27

Power Management 32, 33

Power On Self Test 29, 64

Power/Suspend/Resume Button 6, 32

Pre-Installed Software 79
Adobe Acrobat Reader 79
BatteryAid 79
Drive Image Special Edition (DISE) 80
Fujitsu HotKey 80
Intel SpeedStep 80
LifeBook Application Panel 80
manuals 79
Netscape 6.01 80
Quicken New User Edition 80

Preparation for wireless LAN connection (XP) 99

PS/2 Port 51

R

Registration 30, 31

Restarting 33

Restoring Your Pre-installed Software 66

RJ-11 50

RJ-45 50

S

ScrLk 12

SDRAM 10, 45

Security Indicator 12

Security Panel 20

Serial Port 51, 87
problems 58, 59

SMART 87

Specifications 77
Audio 77
Chipset 77
Dimensions and Weight 79
Environmental Requirements 79
Keyboard 78
Memory 77

Microprocessor 77
Power 78
Video 77

SRAM 87

Status Indicator Panel 6, 11

Stereo Line-in Jack 52

Stereo Speakers 6

Super-Multi DVD 39

Super-Multi DVD drive 39

Suspend 87

Suspend Mode 32

S-Video 87

T

Touchpad 15
buttons 15
controls 16

Touchpad Pointing Device 6

Troubleshooting 55

U

Universal Serial Bus Ports 51

Unpacking 5

USB 51, 58
problems 58, 59

USB 2.0 Ports 8, 9

V

Volume control 17

W

Warranty 1

WFM 88

Windows
Windows XP Home 1
Windows XP Professional 1

Windows keys 13
Application key 13
Start keys 13

Wireless LAN
Ad Hoc Mode 96
Before Using the Wireless LAN 96
Broadcom Wireless LAN 96
For better communications 97
Infrastructure Mode 97
Intel PROSet Wireless LAN 96

IP address information 114
Other settings 108
Setting of power-saving function 108
Specifications 115
Starting Transmission 98
Stopping transmission 98
Troubleshooting 109
Wireless LAN Glossary 112