EMC Technologies Report Number: M050215_Cert_WLL4070_11abg_DTS_BT

APPENDIX N – User Manual Pt 1

Copyright

Fujitsu Computer Systems Corporation has made every effort to ensure the accuracy and completeness of this document; however, as ongoing development efforts are continually improving the capabilities of our products, we cannot guarantee the accuracy of the contents of this document. We disclaim liability for errors, omissions, or future changes.

Fujitsu, the Fujitsu logo, and LifeBook are registered trademarks of Fujitsu Limited.

The following are registered trademarks of IBM Corporation: IBM, IBM PC AT, IBM PS/2.

The following are registered trademarks of Microsoft Corporation: MS, MS-DOS, Windows.

PCMCIA is a trademark of the Personal Computer Memory Card International Association.

Earthlink is a registered trademark of EarthLink Network, Inc.

Intel and Pentium are registered trademarks of Intel Corporation or its subsidiaries in the United States and other countries.

The Bluetooth trademark is owned by Bluetooth SIG, Inc., USA.

Adobe Acrobat Reader is a registered trademark of Adobe Systems, Inc.

Netscape 7.0 is a registered trademark of Netscape Communications Corporation.

PowerQuest and Drive Image are registered trademarks of PowerQuest Corporation.

Norton AntiVirus is a registered trademark of Symantec Corporation.

BayManager is a registered trademark of Softex, Inc.

The DVD player found in some models of the LifeBook notebook incorporates copyright protection technology that is protected by method claims of certain U.S. patents and other intellectual property rights owned by Macrovision Corporation and other rights users. Use of this copyright protection technology must be authorized by Macrovision Corporation, and is intended for home and other limited viewing uses only unless authorized by Macrovision Corporation. Reverse engineering or disassembly is prohibited.

Dolby Headphone manufactured under license from Dolby Laboratories. Dolby, Pro Logic, and the double-D symbol are trademarks of Dolby Laboratories. Copyrights 1992-1999 Dolby Laboratories. All rights reserved.

All other trademarks mentioned herein are the property of their respective owners.

Warning

Handling the cord on this product will expose you to lead, a chemical known to the State of California to cause birth defects or other reproductive harm.

Wash hands after handling.

© Copyright 2004 Fujitsu Computer Systems Corporation. All rights reserved. No part of this publication may be copied, reproduced, or translated, without prior written consent of Fujitsu. No part of this publication may be stored or transmitted in any electronic form without the written consent of Fujitsu.

B6FH-1931-01EN-00 (DRAFT)

DECLARATION OF CONFORMITY

according to FCC Part 15

Responsible Party Name:	Fujitsu Computer Systems Corporation
Address:	1250 E. Arques Avenue, M/S 122 Sunnyvale, CA 94085
Telephone:	(408) 746-6000
Declares that product:	Base Model Configurations: LifeBook E8020 notebook LifeBook E8020D notebook Complies with Part 15 of the FCC Rules.

This device complies with Part 15 of the FCC rules. Operations are subject to the following two conditions: (1) This device must not be allowed to cause harmful interference, (2) This device must accept any interference received, including interference that may cause undesired operation.

E Series.book Page 2 Wednesday, April 14, 2004 10:28 AM

E Series.book Page 3 Wednesday, April 14, 2004 10:28 AM

Fujitsu LifeBook® E8000 Notebook
Table of Contents

1

PREFACE

Preface

About This Guide 1
Fujitsu Contact Information 1
Limited Warranty 1

2

GETTING TO KNOW YOUR LIFEBOOK

Overview

Unpacking 5

Locating the Controls and Connectors

Top and Front Components 6
Left-Side Panel Components 7
Right-Side Panel Components 8
Back Panel Components 9
Bottom Components 10

Status Indicator Panel

Power Indicator 11
AC Adapter Indicator 11
Battery Level Indicators 11
Battery Charging Indicators 12
DVD/CD-RW/CD-ROM Drive Access Indicator . 12
Hard Drive or Removable Media Drive Access Indicator 12
PC Card Access Indicators 12
NumLk Indicator 12
CapsLock Indicator 12
ScrLk Indicator 12
Security Indicator 12

Keyboard

Using the Keyboard 13
Numeric Keypad 13
Windows Keys 13
Cursor Keys 13
Function Keys 14

Touchpad Pointing Device

Clicking 15
Double-Clicking 15
Dragging 16
Touchpad Control Adjustment 16
Scrolling 16
Optional Quick Point Feature 16

Volume Control

Controlling the Volume 17

Flexible Bay Devices

Removing and Installing Modular Devices 18

LifeBook Security/Application Panel

Setting up Your LifeBook Security Panel 20
Passwords 20
Operating Your LifeBook Security/ Application Panel 21
Precautions 21
Uninstalling the Security Panel Application 21
Launching Applications with the Security/Application Panel 22

3

GETTING STARTED

Power Sources

Connecting the Power Adapters 27

Display Panel

Opening the Display Panel 28

E Series.book Page 4 Wednesday, April 14, 2004 10:28 AM

Adjusting Display Panel Brightness 28
Closing the Display Panel 28

Starting Your LifeBook Notebook

Power On 29
Boot Sequence 29
BIOS Setup Utility 29
Booting the System 30
Windows Product Activation 30
Registering Your LifeBook Notebook 31
Installing Click Me! 31

Power Management

Power/Suspend/Resume Button 32
Suspend Mode 32
Hibernation (Save-to-Disk) Feature 33
Display Timeout 33
Hard Disk Timeout 33
Windows Power Management 33
Restarting the System 33
Power Off 33

4

USER-INSTALLABLE FEATURES

Lithium ion Battery

Recharging the Batteries 37
Replacing the Battery 38

Optical Drive

Media Player Software 39
Loading Media on Your Drive 39
Removing Media 40
Using the Media Player Software 40
Using Dolby™ Headphone 41
Using Media Player on Battery Power 41

External USB Floppy Disk Drive

Loading a Disk 42
Ejecting a Disk 42
Preparing a Disk for Use 42

PC Cards

Installing PC Cards 43
Removing PC Cards 43
Smart Card Reader 44

Memory Upgrade Module

Installing Memory Upgrade Modules 45
To Remove a Memory Upgrade Module 45
Checking the Memory Capacity 46

Port Replicator

Back Panel Components 47
Front Panel Components 48
Attaching the Port Replicator 48
Locking the Port Replicator 49
Detaching the Port Replicator 49

Device Ports

Modem (RJ-11) Telephone Jack 50
Internal LAN (RJ-45) Jack 50
Parallel Port 50
Serial Port 51
PS/2 Port 51
Docking Port 51
Universal Serial Bus Ports 51
Infrared Port 51
Stereo Line-In Jack 52
IEEE 1394 Port 52
Headphone Jack 52
Microphone Jack 52
External Monitor Port 52

5

TROUBLESHOOTING

Troubleshooting Your System

Identifying the Problem 55
Specific Problems 55
Troubleshooting Table 56
Power On Self Test Messages 64
Emergency media Player Drive Tray Release . . . 65
Modem Result Codes 65
Restoring Your Pre-installed Software 66
Drive Image Special Edition (DISE) 66
Automatically Downloading Driver Updates . . . 67

E Series.book Page 5 Wednesday, April 14, 2004 10:28 AM

6

CARING FOR YOUR LIFEBOOK

Care and Maintenance

Batteries 72
Floppy Disks and Drives 72
Media Care 72
PC Cards 73

7

SYSTEM SPECIFICATIONS

Specifications

Configuration Label 77
Microprocessor 77
Chipset 77
Memory 77
Video 77
Audio 77
Mass Storage Device Options 77
Features 78
Device Ports 78
Keyboard 78
Power 78
Dimensions and Weight 79
Environmental Requirements 79
Popular Accessories 79
Pre-Installed Software 79
Learning About Your Software 79

8

GLOSSARY/REGULATORY

Glossary 83
Regulatory Information 89

APPENDIX: WIRELESS LAN USER'S GUIDE

Before Using the Wireless LAN

For better communications 97
Stopping transmission 98
Starting Transmission 98

Connection using Wireless Zero Configuration Tool

Flow of operations 99
Preparation for wireless LAN connection 99
Connection to the network 101

Connection using Atheros Client Utility

Flow of operations 104
Preparation for wireless LAN connection 104
Connection to the network 105

Other settings

Setting of power-saving function 108

Troubleshooting the WLAN

Troubleshooting 109

Wireless LAN Glossary

Glossary 112

IP address information

Additional Information 114

Specifications

Specification 115

Using the Bluetooth Device

What is Bluetooth 116
Where to Find Information About Bluetooth . . 116

INDEX

Index 117

1
Preface

E Series.book Page 2 Wednesday, April 14, 2004 10:28 AM

E Series.book Page 1 Wednesday, April 14, 2004 10:28 AM

Preface

ABOUT THIS GUIDE

The LifeBook E8000 notebook from Fujitsu is a powerful computer, powered by an Intel Pentium M microprocessor. Depending upon the configuration, the notebook has either a built-in 15" TFT XGA or SXGA+ color display. This system brings the computing power of desktop personal computers (PCs) to a portable environment.

This manual explains how to operate your LifeBook notebook's hardware and built-in system software. Your notebook is compatible with the IBM® PC AT.

Your computer comes with Microsoft Windows® XP Home, or XP Professional pre-installed.

Conventions Used in the Guide

Keyboard keys appear in brackets.
Example: [Fn], [F1], [ESC], [ENTER] and [CTRL].

Pages with additional information about a specific topic are cross-referenced within the text.
For example: (See page xx.)

On screen buttons or menu items appear in bold
Example: Click **OK** to restart your LifeBook notebook.

DOS commands you enter appear in Courier type.
Example: `Shutdown the computer?`

The information icon highlights information that will enhance your understanding of the subject material.

The caution icon highlights information that is important to the safe operation of your computer, or to the integrity of your files. Please read all caution information carefully.

The warning icon highlights information that can be hazardous to either you, your LifeBook notebook, or your files. Please read all warning information carefully.

FUJITSU CONTACT INFORMATION

Service and Support

You can contact Fujitsu Service and Support in the following ways:

- Toll free: 1-800-8Fujitsu (1-800-838-5487)
- E-mail: 8fujitsu@us.fujitsu.com
- Web site: us.fujitsu.com/computers

Before you place the call, you should have the following information ready so that the customer support representative can provide you with the fastest possible solution:

- Product name
- Product configuration number
- Product serial number
- Purchase date
- Conditions under which the problem occurred
- Any error messages that have occurred
- Type of device connected, if any

Fujitsu Online

You can go directly to the online Fujitsu Product catalog for your LifeBook notebook by clicking on the LifeBook Accessories Web site URL link located in the Service and Support Software folder of the Windows Start menu.

You can also reach Fujitsu Service and Support online by clicking on the Service and Support Web site URL link, located in the Service and Support Software folder of the Windows Start menu.

You must have an active internet connection to use the online URL links.

LIMITED WARRANTY

Your LifeBook notebook is backed by a Fujitsu International Limited Warranty. Check the service kit that came with your notebook for the Limited Warranty period and terms and conditions.

2

Getting to Know Your LifeBook Notebook

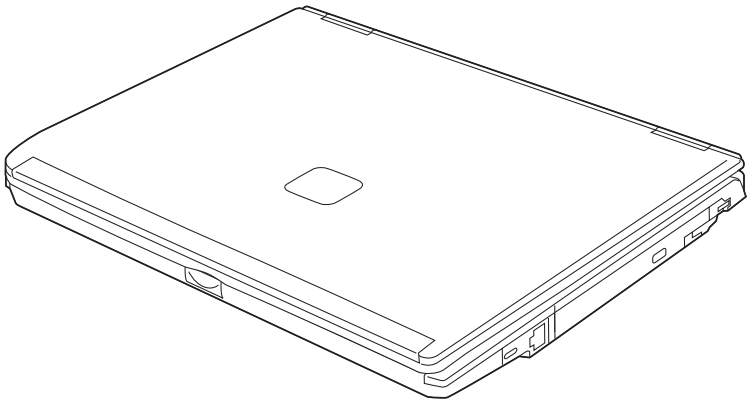

Figure 2-1. Fujitsu LifeBook E8000 notebook

Overview

This section describes the components of your Fujitsu LifeBook E8000 notebook. We strongly recommend that you read it before using your notebook – even if you are already familiar with notebook computers.

UNPACKING

When you receive your LifeBook notebook, unpack it carefully, and compare the parts you have received with the items listed below.

For a pre-configured model you should have:

- LifeBook E8000 notebook *(Figure 2-1)*
- AC adapter with AC power cord *(Figure 2-2)*
- Lithium ion Battery, pre-installed
- Weight Saver
- Phone/Modem (RJ-11) telephone cable
- Driver and Application Restore (DAR) Disc
- Getting Started Guide
- User's Guide (this document)
- International Limited Warranty Brochure
- Microsoft®-associated product materials

Depending on your system configuration, one of the following devices will be pre-installed in the Flexible Bay:

- Weight Saver
- Modular Super-Multi DVD Drive
- Modular DVD/CD-RW combo drive
- Modular CD-ROM drive

Depending on your system configuration, the following optional items may be included with your system:

- Modular 2nd bay battery
- External USB floppy disk drive

Depending on your configuration, you may receive the following application CDs:

- DVD Application CD
- CD-RW Application CD

Once you have checked and confirmed that your LifeBook system is complete, read through the following pages to learn about all of your notebook's components.

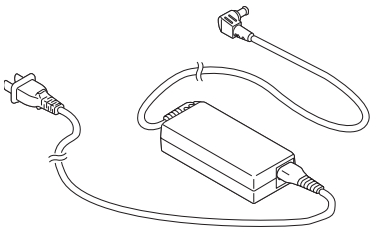

Figure 2-2 AC Adapter

E Series.book Page 6 Wednesday, April 14, 2004 10:28 AM

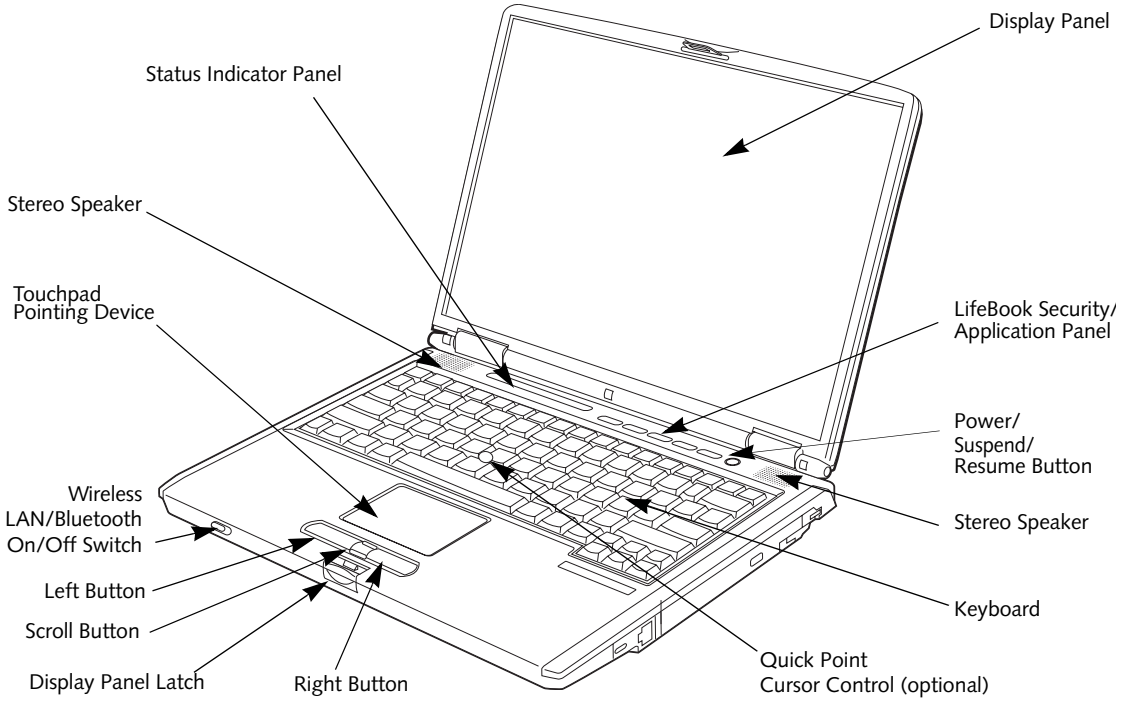

Figure 2-3. LifeBook notebook with display open

Locating the Controls and Connectors

TOP AND FRONT COMPONENTS

The following is a brief description of your LifeBook notebook's top and front components.

Display Panel

The display panel is a color LCD panel with back lighting for the display of text and graphics.

LifeBook Security/Application Panel

The LifeBook Security/Application Panel provides hardware security and one-touch application launch capability. *(See LifeBook Security/Application Panel on page 20 for more information)*

Power/Suspend/Resume Button

The Power/Suspend/Resume button allows you to suspend notebook activity without powering off, resume your LifeBook notebook from suspend mode, and power on your notebook when it has been shut down from Windows. *(See Power/Suspend/Resume Button on page 32 for more information)*

Stereo Speakers

The built-in dual speakers allow for stereo sound.

Keyboard

A full-size keyboard with dedicated Windows keys. *(See Keyboard on page 13 for more information)*

Touchpad Pointing Device

The Touchpad pointing device is a mouse-like cursor control with three buttons: two mouse-like buttons, and a scroll button. *(See Touchpad Pointing Device on page 15 for more information)*

Quick Point Cursor Control (optional)

The optional Quick Point control offers an additional method for moving the cursor. *(See Optional Quick Point Feature on page 16 for more information)*

Display Panel Latch

The display panel latch locks and releases the display panel.

Wireless LAN/Bluetooth On/Off Switch

The wireless LAN/Bluetooth on/off switch is used to power on and off the optional WLAN and/or Bluetooth device. Switching the device off when not in use will help to extend battery life.

Status Indicator Panel

The Status Indicator Panel displays symbols that correspond with a specific component of your LifeBook notebook. *(See Status Indicator Panel on page 11 for more information)*

E Series.book Page 7 Wednesday, April 14, 2004 10:28 AM

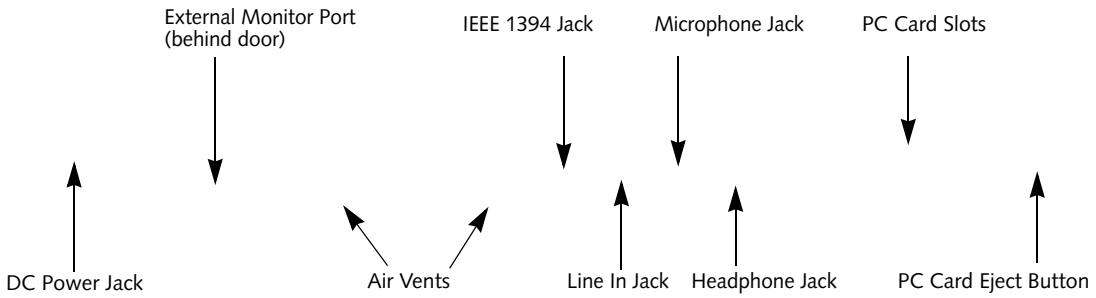

Figure 2-4. LifeBook notebook left-side panel

LEFT-SIDE PANEL COMPONENTS

The following is a brief description of your LifeBook notebook's left-side components.

External Monitor Port

The external monitor port allows you to connect an external monitor. *(See External Monitor Port on page 52 for more information)*

IEEE 1394 (4-pin) Jack

The 4-pin 1394 jack is used to connect between your LifeBook and an IEEE 1394 peripheral such as a digital video camera. *(See IEEE 1394 Port on page 52 for more information)*

Microphone Jack

The microphone jack allows you to connect an external mono microphone. *(See Microphone Jack on page 52 for more information)*

PC Card Slot

The PC Card Slots allow you to install two Type I or Type II PC Cards or one Type III PC Card. *(See PC Cards on page 43 for more information)*

Stereo Line-in Jack

The stereo line-in jack allows you to connect an external audio source. *(See Stereo Line-In Jack on page 52 for more information)*

Headphone Jack

The headphone jack allows you to connect headphones or powered external speakers. *(See Headphone Jack on page 52 for more information)*

DC Power Jack

The DC power jack allows you to plug in the AC adapter to power your LifeBook notebook and charge the internal Lithium ion battery.

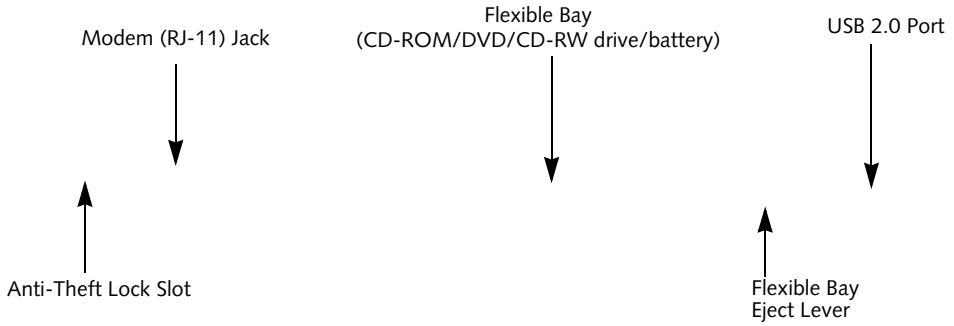

Figure 2-5. LifeBook notebook right-side panel

RIGHT-SIDE PANEL COMPONENTS

The following is a brief description of your LifeBook notebook's right-side components.

Modem (RJ-11) Telephone Jack

The Modem (RJ-11) telephone jack is for attaching a telephone line to the internal multinational 56K modem. *(See Modem (RJ-11) Telephone Jack on page 50 for more information)*

> The internal modem is not intended for use with Digital PBX systems. Do not connect the internal modem to a Digital PBX as it may cause serious damage to the internal modem or your entire notebook. Consult your PBX manufacturer's documentation for details. Some hotels have Digital PBX systems. Be sure to find out BEFORE you connect your modem.

> The internal multinational modem is designed to the ITU-T V.90 standard. Its maximum speed of 53000bps is the highest allowed by FCC, and its actual connection rate depends on the line conditions. The maximum speed is 33600 bps at upload.
>
> For additional information about the multinational modem, refer to the Fujitsu web site at: us.fujitsu.com/computers

Flexible Bay

The Flexible Bay can accommodate one of the following devices. *(See Flexible Bay Devices on page 18 for more information)*

- Modular USB Floppy Disk Drive
- Modular CD-ROM drive
- Modular DVD/CD-RW combo drive
- Modular Super-Multi DVD Drive
- Modular Lithium ion battery
- Weight Saver

Flexible Bay Eject Lever

The Flexible Bay eject lever releases the Flexible Bay device.

USB 2.0 Port

The USB 2.0 port allows you to connect Universal Serial Bus devices. USB 2.0 transfers data at up to 480Mbps and is backward-compatible with USB 1.1 devices, which transfer data at up to 12Mbps. *(See Universal Serial Bus Ports on page 51 for more information)*

Anti-theft Lock Slot

The anti-theft lock slot allows you to attach an optional physical lock down device.

E Series.book Page 9 Wednesday, April 14, 2004 10:28 AM

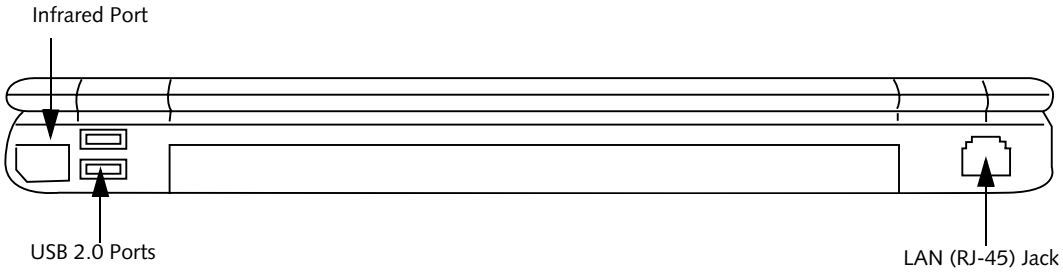

Figure 2-6. LifeBook notebook back panel

BACK PANEL COMPONENTS

Following is a brief description of your LifeBook notebook's back panel components.

Infrared Port

The fast IrDA compatible port allows you to communicate with another IrDA compatible infrared device without a cable. *(See Infrared Port on page 51 for more information)*

USB 2.0 Ports

The USB 2.0 ports allow you to connect Universal Serial Bus devices. USB 2.0 transfers data at up to 480Mbps and is backward-compatible with USB 1.1 devices, which transfer data at up to 12Mbps. *(See Universal Serial Bus Ports on page 51 for more information)*

LAN (RJ-45) Jack

The internal LAN (RJ-45) jack is used for an internal Gigabit (10Base-T/100Base-Tx/1000Base-T/Tx) Ethernet LAN connection. *(See Internal LAN (RJ-45) Jack on page 50 for more information)*

E Series.book Page 10 Wednesday, April 14, 2004 10:28 AM

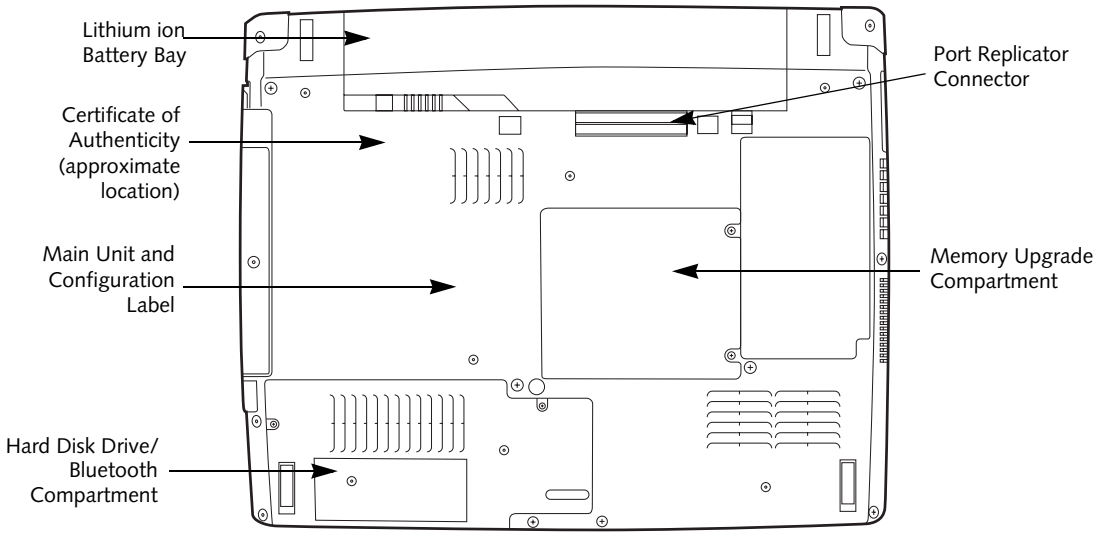

Figure 2-7. LifeBook notebook bottom panel

BOTTOM COMPONENTS

The following is a brief description of your LifeBook notebook's bottom panel components.

Port Replicator Connector

This connector allows you to connect the optional Port Replicator to your notebook.

Memory Upgrade Compartment

Your LifeBook notebook comes with high speed Double Data Rate Synchronous Dynamic RAM (DDR SDRAM). The memory upgrade compartment allows you to expand the system memory capacity of your LifeBook notebook, hence improving overall performance. *(See Memory Upgrade Module on page 45 for more information)*

Lithium ion Battery Bay

The battery bay contains the internal Lithium ion battery. It can be opened for the removal of the battery when stored over a long period of time or for swapping a discharged battery with a charged Lithium ion battery. *(See Lithium ion Battery on page 37 for more information)*

Main Unit and Configuration Label

The configuration label shows the model number and other information about your LifeBook notebook. In addition, the configuration portion of the label has the serial number and manufacturer information that you will need to give your support representative. It identifies the exact version of various components of your notebook.

Hard Disk Drive/Bluetooth Compartment

This compartment houses the system hard disk drive and the optional Bluetooth device. (Note that the optional wireless LAN device is located under the keyboard). Under normal circumstances, it should not be necessary to open this compartment.

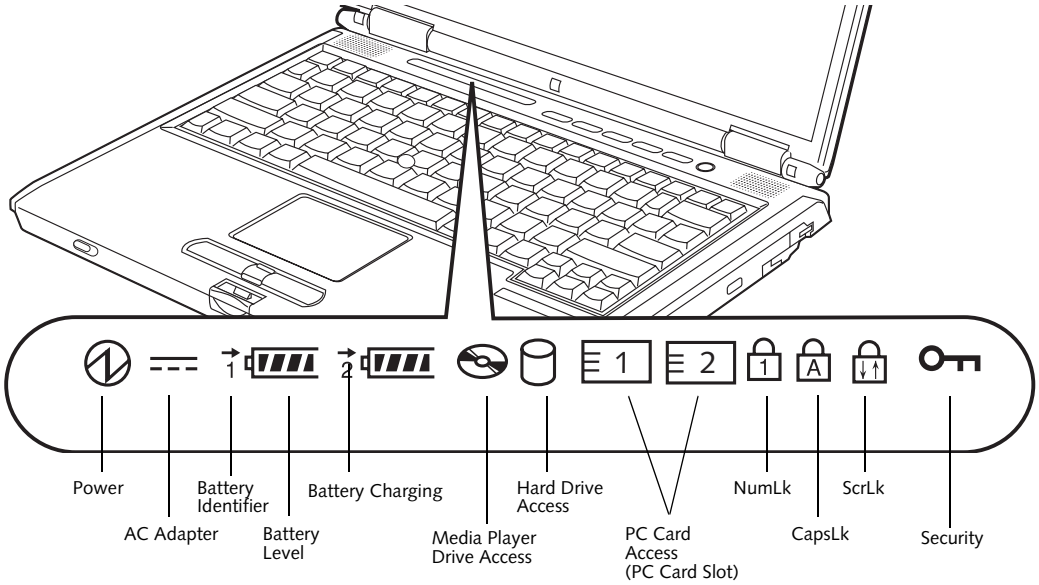

Figure 2-8. Status Indicator Panel

Status Indicator Panel

The Status Indicator displays symbols that correspond with a specific component of your Fujitsu LifeBook notebook. These symbols tell you how each of those components are operating. *(Figure 2-8)*

POWER INDICATOR

The Power indicator symbol states whether your system is operational. It has several different states, each of which tells you the mode your notebook is in.

- **Steady On:** This means that there is power to your LifeBook notebook and that it is ready for use.
- **Flashing:** This means that your LifeBook notebook is in Suspend mode.
- **Steady Off:** This means that your system is either in Save-to-Disk mode, or that your LifeBook notebook has been turned off.

If you are charging your battery, the Power indicator will remain on even if your notebook is shut off. The Power indicator will also remain on if you have either adapter connected and are shut down from Windows.

AC ADAPTER INDICATOR

The AC Adapter indicator states whether your notebook is operating from the AC adapter, the Auto/Airline adapter or the batteries. This icon has two different states that can tell you what power source your LifeBook notebook is using.

- On: This means that either of the adapters are currently in use.
- Off: Power is only coming from the batteries, and you do not have an adapter connected.

BATTERY LEVEL INDICATORS

The two Battery Level indicators state whether or not the primary Lithium ion battery and/or the optional second Lithium ion battery are installed (Battery 1 refers to the primary Lithium ion battery, while Battery 2 refers to the Flexible Bay optional second battery). In addition, this symbol states how much charge is available within each installed battery. The symbol will only be displayed for a battery that is currently installed in your LifeBook notebook. *(Figure 2-9)*

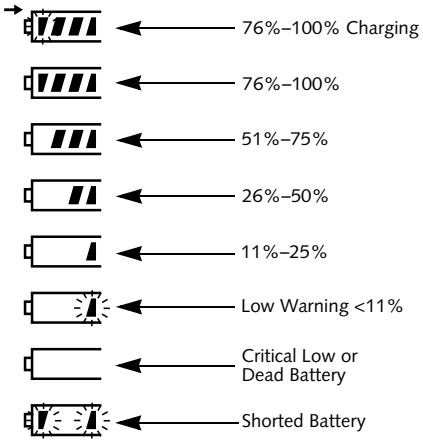

Figure 2-9 Battery Level Indicator

A shorted battery is damaged and must be replaced. *(Figure 2-9)*

BATTERY CHARGING INDICATORS

Located to the left of each of the Battery Level indicators is a small arrow symbol. This symbol states whether that specific battery is charging. This indicator will flash if the battery is too hot or cold to charge.

Batteries subjected to shocks, vibration or extreme temperatures can be permanently damaged.

DVD/CD-RW/CD-ROM DRIVE ACCESS INDICATOR

The DVD/CD-RW/CD-ROM Access indicator tells you that the DVD/CD-RW/CD-ROM drive is being accessed. If the Auto Insert Notification function is active, the indicator will flash periodically when your system is checking the DVD/CD-RW/CD-ROM drive. If the Auto Insert Notification function is not active, the indicator will only flash when you access the DVD/CD-RW/CD-ROM drive. The default setting is the Auto Insert Notification function active.

The DVD/CD-RW/CD-ROM Auto Insert Notification function will periodically check for a DVD/CD-RW/CD-ROM installed in the drive, causing the DVD/CD-RW/CD-ROM Access indicator to flash. The DVD/CD-RW/CD-ROM Auto Insert Notification function allows your system to automatically start a DVD/CD-RW/CD-ROM as soon as it is inserted in the drive and the tray is closed. It will begin playing an audio DVD/CD or will start an application if the DVD/CD has an auto-run file

HARD DRIVE OR REMOVABLE MEDIA DRIVE ACCESS INDICATOR

The Hard Drive Access indicator states whether your internal hard drive is being accessed.

The Hard Drive Access indicator does not show which hard drive is being accessed.

PC CARD ACCESS INDICATORS

The PC Card Access indicators display whether or not your notebook is accessing a PC Card. The indicator will flash if your software tries to access a PC Card even if there is no card installed. *(See PC Cards on page 43 for more information)*

NUMLK INDICATOR

The NumLk indicator states that the integral keyboard is set in ten-key numeric keypad mode.

CAPSLOCK INDICATOR

The CapsLock indicator states that your keyboard is set to type in all capital letters.

SCRLK INDICATOR

The ScrLk indicator states that your scroll lock is active.

SECURITY INDICATOR

The Security Indicator flashes (if a password was set) when the system resumes from Off or Standby modes. You must enter the password that was set in the Security Panel before your system will resume operation.

E Series.book Page 13 Wednesday, April 14, 2004 10:28 AM

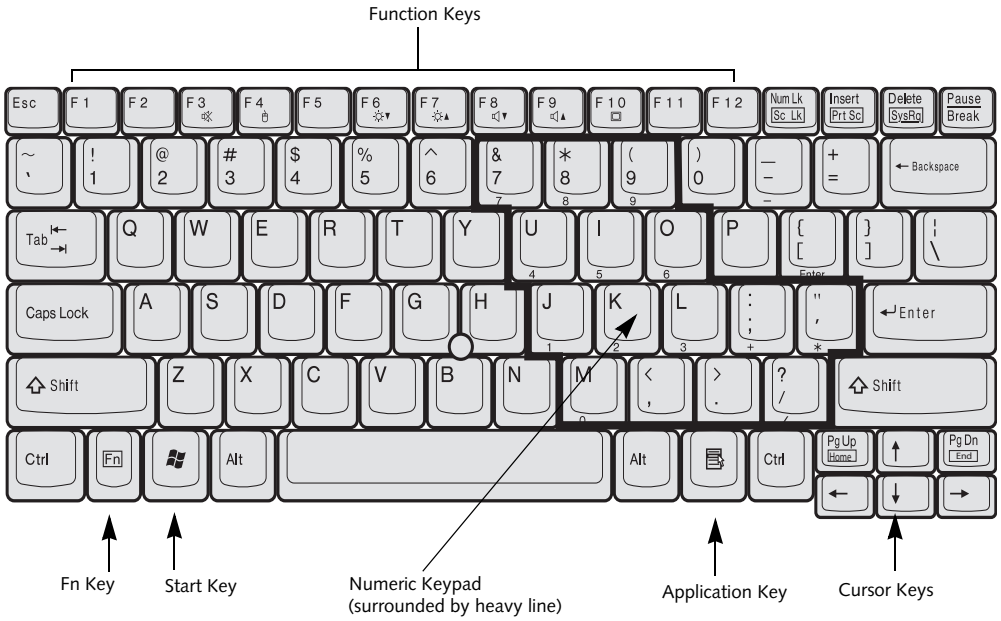

Figure 2-10 Keyboard

Keyboard

USING THE KEYBOARD

Your Fujitsu LifeBook notebook has an integral 84-key keyboard. The keys perform all the standard functions of a 101-key keyboard, including the Windows keys and other special function keys. This section describes the following keys. *(Figure 2-10)*

- Numeric keypad: Your notebook allows certain keys to serve dual purposes, both as standard characters and as numeric and mathematical keys. The ability to toggle between the standard character and numerical keys is controlled through the [NumLk] key.
- Cursor keys: Your keyboard contains four arrow keys for moving the cursor or insertion point to the right, left, up, or down within windows, applications and documents.
- Function keys: The keys labeled [F1] through [F12], are used in conjunction with the [Fn] key to produce special actions that vary depending on what program is running.
- Windows keys: These keys work with your Windows operating system and function the same as the onscreen Start menu button, or the right button on your pointing device.

NUMERIC KEYPAD

Certain keys on the keyboard perform dual functions as both standard character keys and numeric keypad keys. NumLk can be activated by pressing the [NumLk] keys. Turning off the NumLk feature is done the same way. Once this feature is activated you can enter numerals 0 through 9, perform addition (+), subtraction (-), multiplication (*), or division (/), and enter decimal points (.) using the keys designated as ten-key function keys. The keys in the numeric keypad are marked on the front edge of the key to indicate their secondary functions. *(Figure 2-10)*

WINDOWS KEYS

Your LifeBook notebook has two Windows keys, consisting of a Start key and an Application key. The Start key displays the Start menu. This button functions the same as your onscreen Start menu button. The Application key functions the same as your right mouse button and displays shortcut menus for the selected item. (Please refer to your Windows documentation for additional information regarding the Windows keys.) *(Figure 2-10)*

CURSOR KEYS

The cursor keys are the four arrow keys on the keyboard which allow you to move the cursor up, down, left and right in applications. In programs such as Windows Explorer, it moves the “focus” (selects the next item up, down, left, or right). *(Figure 2-10)*

FUNCTION KEYS

Your LifeBook notebook has 12 function keys, F1 through F12. The functions assigned to these keys differ for each application. You should refer to your software documentation to find out how these keys are used. *(Figure 2-10)*

The [Fn] key provides extended functions for the notebook and is always used in conjunction with another key.

- [Fn+F3]: Pressing [F3] while holding [Fn] will toggle the Audio Mute on and off.
- [Fn+F4]: Pressing [F4] while holding [Fn] will toggle the Quick Point feature on and off. Note that the [Fn+F4] combination only works if Manual Setting is selected in the BIOS. (See "BIOS Setup Utility" on page 29)
- [Fn+F6]: Pressing [F6] repeatedly while holding [Fn] will lower the brightness of your display.*
- [Fn+F7]: Pressing [F7] repeatedly while holding [Fn] will increase the brightness of the display.*
- [Fn+F8]: Pressing [F8] repeatedly while holding [Fn] will decrease the volume of your LifeBook notebook.**
- [Fn+F9]: Pressing [F9] repeatedly while holding [Fn] will increase the volume of your LifeBook notebook.**

* There are eight brightness levels.

** There are 26 audio levels.

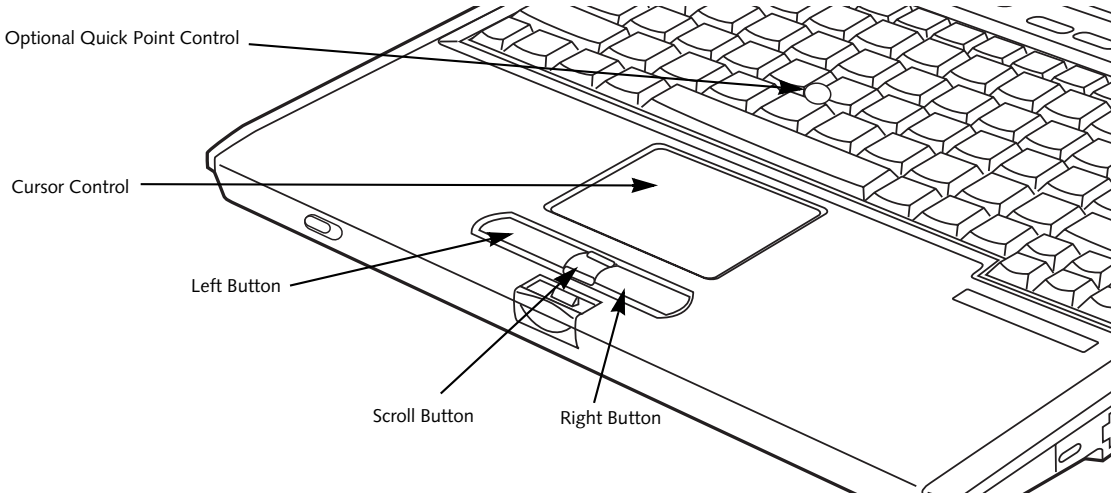

Figure 2-11. Touchpad pointing device

Touchpad Pointing Device

Certain E8000 LifeBook notebooks are equipped with an optional "Quick Point" button for moving the cursor. For more information about Quick Point, see "Optional Quick Point Feature" on page 16.

The Touchpad pointing device comes built into your Fujitsu LifeBook notebook. It is used to control the movement of the pointer to select items on your display panel. The Touchpad is composed of a cursor control, a left and right button, and a scrolling button. The cursor control works the same way a mouse does, and moves the cursor around the display. It only requires light pressure with the tip of your finger. The left and right buttons function the same as mouse buttons. The actual functionality of the buttons may vary depending on the application that is being used. The scrolling button allows you to navigate quickly through pages, without having to use the scroll bars. *(Figure 2-11)*

An external mouse can be connected to either the USB port on your LifeBook notebook or the USB or PS/2 ports on the optional port replicator, and used simultaneously with the Touchpad. However, if you boot the system with an external mouse connected the Touchpad will be disabled or enabled depending on the specifications in your BIOS settings. *(See BIOS Setup Utility on page 29 for more information)*

CLICKING

Clicking means pushing and releasing a button. To left-click, move the cursor to the item you wish to select, press the left button once, and then immediately release it. To right-click, move the mouse cursor to the item you wish to select, press the right button once, and then immediately release it. You also have the option to perform the clicking operation by tapping lightly on the Touchpad once. *(Figure 2-12)*

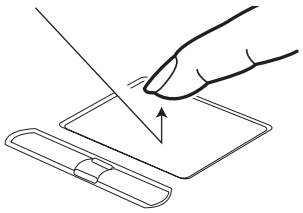

Figure 2-12 Clicking

DOUBLE-CLICKING

Double-clicking means pushing and releasing the left button twice in rapid succession. This procedure does not function with the right button. To double-click, move the cursor to the item you wish to select, press the left button twice, and then immediately release it. You also have the option to perform the double-click operation by tapping lightly on the Touchpad twice. *(Figure 2-13)*

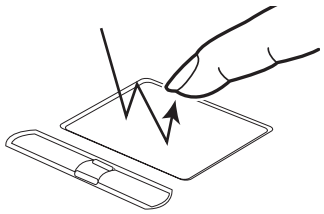

Figure 2-13 Double-clicking

- If the interval between clicks is too long, the double-click will not be executed.
- Parameters for the Touchpad can be adjusted from the Mouse Properties dialog box located in the Windows Control Panel.

DRAGGING

Dragging means pressing and holding the left button, while moving the cursor. To drag, move the cursor to the item you wish to move. Press and hold the left button while moving the item to its new location and then release it. Dragging can also be done using the Touchpad. First, tap the Touchpad twice over the item you wish to move making sure to leave your finger on the pad after the final tap. Next, move the object to its new location by moving your finger across the Touchpad, and then release your finger. *(Figure 2-14)*

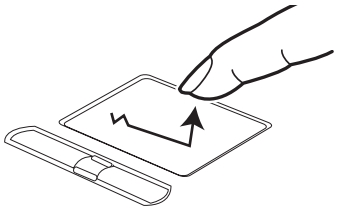

Figure 2-14 Dragging

TOUCHPAD CONTROL ADJUSTMENT

The Windows Control Panel allows you to customize your Touchpad with selections made from within the Mouse Properties dialog box.

SCROLLING

Using the Scrolling button allows you to navigate through a document quickly without using the window's scroll bars. This is particularly useful when you are navigating through on-line pages. To use the Scrolling button, press the crescent shape at the top or bottom of the button to scroll up or down a page. When you have reached the desired section of the page, release the button. *(Figure 2-15)*

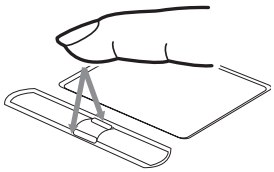

Figure 2-15 Scrolling

OPTIONAL QUICK POINT FEATURE

The optional Quick Point device consists of a cursor control button at the lower center of the keyboard. It is roughly the same size and shape as a pencil eraser. The cursor control works the same way a mouse ball does, and moves the cursor around the display. It only requires light pressure to move; the more pressure you use, the faster the cursor will move.

When used with the Quick Point button, the middle Touchpad button allows you to scroll up and down a screen.

Volume Control

Your Fujitsu LifeBook notebook has multiple volume controls which interact with each other.

Any software that contains audio files will also contain a volume control of its own. If you install an external audio device that has an independent volume control, the hardware volume control and the software volume control will interact with each other. It should be noted that if you set your software volume to Off, you will override the external volume control setting.

CONTROLLING THE VOLUME

The volume can be controlled in several different ways:

- Volume can be set from within the Volume Control on the Taskbar.
- Volume can be controlled with the F8 and F9 functions keys. Pressing [F8] repeatedly while holding [Fn] will decrease the volume of your notebook. Pressing [F9] repeatedly while holding [Fn] will increase the volume of your notebook.

There are 26 levels through which the function keys cycle.

- Volume can be controlled by many volume controls that are set within individual applications.
- Certain external audio devices you might connect to your system may have hardware volume controls.

Each source discussed above puts an upper limit on the volume level that must then be followed by the other sources.

We recommend that you experiment with the various volume controls to discover the optimal sound level.

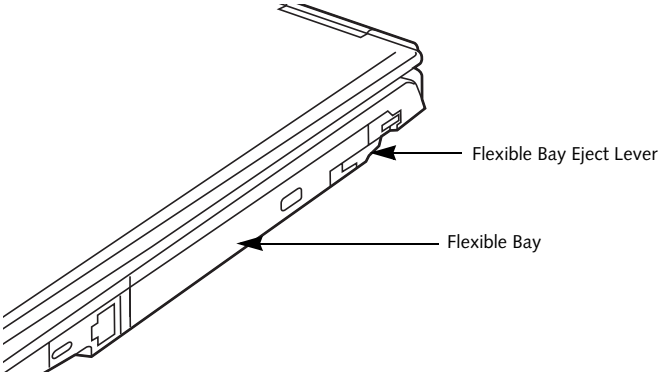

Figure 2-16 Flexible Bay

Flexible Bay Devices

Your Fujitsu LifeBook notebook contains a Flexible Bay. The Flexible Bay can house an optical drive, a Lithium ion battery, and a weight saver. *(Figure 2-16)*

Your Flexible Bay will have one of the following devices installed.

- Modular Super-Multi DVD drive: This allows you to access movies, software, and audio DVD/CDs and record to DVD, CD, and DVD-RAM discs.
- Modular DVD/CD-RW combo drive: This allows you to access movies, software, and audio DVD/CDs as well as to write to CDs.
- Modular CD-ROM drive: This allows you to access software, data, or audio CDs.
- Modular Lithium ion battery: This is a rechargeable battery that can be used to power your LifeBook notebook when an adapter is not connected.
- Weight Saver: This is used to fill the bay when no device is needed.

REMOVING AND INSTALLING MODULAR DEVICES

There are two ways to remove and install modular devices in the Flexible Bay:

- Cold-swapping: swapping devices while your LifeBook notebook is powered off.
- Hot-swapping: swapping devices while your system is active using the Unplug/Eject icon from your taskbar. Note that if the weight saver is installed rather than a modular device, it is not necessary to use BayManager when removing it.

You should never leave your Flexible Bay empty when the notebook is in operation. If left empty, dust or foreign matter may accumulate inside the notebook.

Cold-swapping

To cold-swap modular devices in your Flexible Bay follow these easy steps: *(Figure 2-17)*

1. Close any open files.
2. Shut down your LifeBook notebook.
3. Pull out the Flexible Bay eject lever. This will push your device out slightly, allowing you to remove the device.
4. Slide your device out until it is clear of the bay. This will require light force.

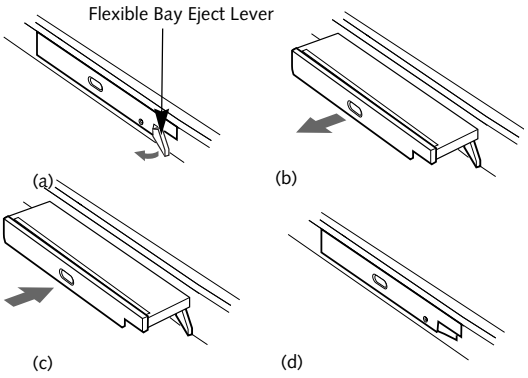

Figure 2-17 Removing/Installing a device in the Flexible Bay

Be careful when aligning and seating devices in the bay. If the fit is incorrect, you may damage the bay or the device. If the device does not move easily in the bay, remove it, and check for dirt or foreign objects. It will require a firm push to latch the device in place.

5. Slide the device you are installing into your notebook until it clicks into place.
6. It is now safe to turn your notebook back on.
7. You can now access and use the device.

Your LifeBook notebook will automatically detect the new device and activate it within your system. The drive letters associated with the device will be created and listed under My Computer and Windows Explorer.

Hot-swapping

Under Windows XP, hot-swapping is provided through the Unplug or Eject Hardware utility.

The icon for the utility appears on the taskbar. Click on the icon and follow the on-screen instructions.

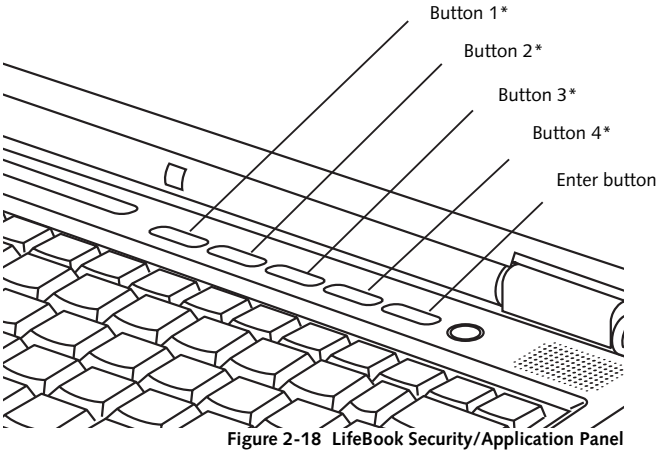

* Security/Application Launcher buttons (for entering passwords and launching applications)

Figure 2-18 LifeBook Security/Application Panel

LifeBook Security/ Application Panel

A unique feature of your LifeBook notebook is the Security/Application Panel that allows you to secure your notebook from unauthorized use. The Security/Application Panel also allows you to launch applications with the touch of a button when your system is on.

If the security system is activated, upon starting your notebook or resuming from suspend mode the security system requires you to enter a password code using the buttons on the Security/Application Panel. After entering a correct password, your notebook resumes system operation. *(Figure 2-18)*

SETTING UP YOUR LIFEBOOK SECURITY PANEL

When you receive your LifeBook notebook, the security panel application is pre-installed without any passwords. The following sections provide detailed information on your security panel, and how to set, change or remove passwords.

Numbered Buttons

Use these buttons to enter your password.*(Figure 2-18)*

Enter Button

After entering the button strokes, push this button to enter the password into the LifeBook notebook. *(Figure 2-18)*

PASSWORDS

The user and supervisor password may be set on this notebook. A supervisor password is typically the same for all LifeBook notebooks in a working group, office, or company to allow for system management. Individual LifeBook notebooks in a group environment should not use a common password. A password consists of one to five button strokes plus the enter button. A valid stroke consists of pushing one or up to four buttons simultaneously. The following are valid button strokes:

- Pushing [4] by itself
- Pushing [2] and [3] at the same time
- Pushing [1], [2], and [4] at the same time
- Pushing [1], [2], [3], and [4] at the same time

The following are valid passwords. The numbers within braces ({ }) are button strokes using more than one button.

- {[2]+[3]}, [1], [enter]
- [4], [enter]
- {[1]+[3]}, {[2]+[3]+[4]}, [1], [4], [2], [enter]

Setting Passwords

When shipped from the factory, no passwords are set. You have a choice of having no password or setting a supervisor and user password. You must set the supervisor password before the user password.

- The purpose of supervisor password is to be able to bypass the user password in case the user password is forgotten. The supervisor password alone will not lock the system.
- You have to set both the supervisor and user passwords for the security panel to work.

Setting Supervisor Password

You must have set a supervisor password before setting any user passwords. The supervisor password can bypass the user password.

1. Go to the **Start** menu.
2. Click on **Run**.

3. Type in:
   `C:\Program Files\Fujitsu\Security Panel Application\Supervisor\FJSECS.EXE`,
   then press [Enter]
4. Follow the on-screen instructions to set the Supervisor password.

Setting User Password

1 Go to the **Start** menu.
2. Click on **Programs**.
3. Click on **Security Panel Application** and **Set User Password**.
4. Follow the on-screen instructions to set the user password.

> You may change or remove the supervisor or user password by repeating the steps defined above.

OPERATING YOUR LIFEBOOK SECURITY/ APPLICATION PANEL

The security lock feature is in effect both when the system resumes from Off or suspend state. You always need to push the Suspend /Resume button to input the user password. Your system will not begin the boot sequence without entering your supervisor/user password.

From Off State

1. Turn on your system.
2. When the Security Indicator flashes, enter the password and press Enter button.

   For example, if the password is 22222,
   Press Button Number 2 five times and press Enter button.

   The LifeBook notebook will boot to normal operation.

From Suspend State

1. Press your Power/Suspend/Resume button.
2. When the Security Indicator flashes, enter the password and press Enter button.

   The notebook should resume normal operation.

Incorrect Password Entry

If an invalid supervisor or user password is entered three times in succession, the system will “beep” for about one minute. If a valid password is entered within a minute (while system beeps), the beeping will stop and the notebook will resume normal operation. If no password (or an invalid one) is entered while the system beeps, the system will return to its previous locked state (suspend or off) and the Security Indicator will go off. To reactivate the notebook after a password failure, you must press the Power/Suspend/Resume button, then enter a correct password.

> Remember the user password you specified on the Security Panel Application. If you forget the password you will not be able to use your computer. The super-visor password can override the user password.

PRECAUTIONS

Opening and Closing the Cover

Closing the cover automatically places the notebook into suspend mode. Opening the cover does not automatically place the notebook into normal operation. Instead, you must enter the proper security password after pushing the Power/Suspend/Resume button.

Low Battery Operations

If your LifeBook notebook has low battery, pushing the Power/Suspend/Resume button only turns on the Security Indicator. Your notebook does not unlock, the Security Indicator turns off after one minute. To resume normal operation, first attach a power supply to the notebook. Then you may unlock the notebook.

UNINSTALLING THE SECURITY PANEL APPLICATION

You have two options when uninstalling the security panel application:

- Uninstall the security panel application software. This will disable all security feature.
- Uninstall the security panel application with password still active. This will not allow any changes to the password.

Uninstalling the Security Panel Application Software

Remove passwords when User wants no password protection whatsoever and doesn’t want to give anybody the utility to set a password on their computer. In this case, if passwords (supervisor, user, or both) are set, the passwords must first be cleared BEFORE removing the application. To clear passwords, follow same procedure in SETTING PASSWORD CODES except this time, select REMOVE, enter current password then click **Next**. When asked to confirm select **Yes**.

Removing Security Panel Application with Passwords Still Active

Using this feature will not allow any changes to the password.

> Removing the applications does not remove the password. It simply removes the utility to change/add/remove passwords. To change your password you must reinstall the application.

User:

1. Go to **Start** Menu, Click on **Control Panel**.
2. Open **Add/Remove Programs Properties** in the Control Panel.
3. Select the **Security Panel Application** in the list, and click **Add/Remove**.
4. When the Confirm File Deletion box appears, click **Yes**.

Supervisor:

1. Go to **Start** Menu, Click on **Control Panel**.
2. Open **Add/Remove Programs Properties** in the Control Panel.
3. Select the **Security Panel Application for Supervisor** in the list, and click **Add/Remove**.
4. When the Confirm File Deletion box appears, click **Yes**.

Reinstalling the Security/Application Panel

To reinstall supervisor or user security application, you will need your Drivers and Applications CD. The **Utilities/Security Application Panel** folder contains two separate folders: **Supervisor** and **User**. The setup files for supervisor and user security applications are contained in those folders.

1. Go to the **Utilities/Security Application Pane/ Supervisor** folder on the CD and double-click the **setups.exe** file. The Installing Security Panel Application window will appear. Follow the instructions on the screen.
2. Go to the **Utilities/Security Application Panel/User** folder on the CD and double-click the **setup.exe** file. The Installing Security Panel Application window will appear. Follow the instructions on the screen.

Supervisor and user passwords can be set via Windows software using the FJSECS.exe and FJSECU.exe files, respectively. FJSECU.exe for the user password cannot run without first setting a supervisor password. You need to run FJSECS.exe first to set the supervisor password. Follow instructions under Setting Passwords on page 20.

If you forget both passwords, please contact Fujitsu Computer Systems Corporation Service and Support at 1-800-8FUJITSU (1-800-838-5487). Fujitsu Computer Systems Corporation charges a service fee for unlocking a password restricted LifeBook notebook. When calling please have a valid credit card and provide proof of ownership. You will then be given instructions on where to ship your notebook.

LAUNCHING APPLICATIONS WITH THE SECURITY/APPLICATION PANEL

The security panel also enables you to launch applications with the touch of a button when your system is on. Pressing any of the buttons will launch a user-defined application. Your notebook is pre-installed with software utilities that let you operate and configure your LifeBook Security /Application Panel. These utilities are found in the Start menu, under Settings -> Control Panel -> Application Panel. (For Windows XP users, go to Start -> Control Panel -> Other Control Panel Settings -> Application Panel. They include two Application Panel Setup tabs, E-mail Setup, and Internet Setup.

Configuring your LifeBook Application Panel

When you start Windows, the LifeBook Application Panel is automatically activated. An icon resembling a finger pressing a button will appear on the system tray (the indented portion of the status bar where the clock is displayed). When you see this icon you will know that LifeBook Application Panel is active.

As an application launcher, the LifeBook Application Panel is very flexible, giving you a variety of options. To set up the Panel to best suit your needs, we have provided the Application Panel Setup utility that quickly and easily helps you make the most of this valuable feature.

To configure your LifeBook Application Panel with Application Panel Setup:

1. Click on **Start**.
2. Click on **Programs**.
3. Click on **LifeBook Application Panel**.
4. Click on **Application Panel Setup**.

The Application Panel Setup utility will appear. There are tabs that correspond to the application buttons on the LifeBook Application Panel. When you receive your notebook, these buttons are pre-configured to launch specific programs, as referenced in Chapter 7 of this document.

> The tabs in Application Panel Setup may not be in the same order as the buttons on your LifeBook notebook, please select the tab you wish to change carefully.

To change an application associated with the Application buttons, click on the tab for the button you would like to reconfigure – for example, Application A. Click on Browse from Start Menu, scroll down the list of applications, click on the application you wish to launch with this button, and then click OK. The button will now launch the new application.

The Internet tab is different. It comes set to launch your Windows default Internet browser (Internet Explorer), unless you have changed this in Windows. In order to reconfigure it to launch another program follow these easy steps:

1. Click on **Other** from the Internet browser box.
2. Click on **Browse** from Start Menu.
3. Scroll down the list of applications, and then click on the application you wish to launch with this button.
4. Click **OK**.

The button will now launch the new application. If you want to return to launching your Windows default Internet browser with this button, you need only click on "Default Internet Browser" from the Internet browser box. Be aware that you will erase the settings for the "other application". If you wish to go back to launching the "other application" from this button, you will need to reconfigure it as described above.

If your system has dedicated one of the application launcher buttons to be an Internet launcher, the button can still be configured to launch any application you wish, not just an Internet browser.

When you have finished with Application Panel Setup click OK, and the new settings will take effect. You can reconfigure your LifeBook Application Panel as often as you like.

Deactivating and Activating the LifeBook Application Panel

To deactivate the LifeBook Application Panel, follow these easy steps:

1. Click on **Start**.
2. Click on **Programs**.
3. Click on **LifeBook Application Panel**.
4. Click on **Deactivate Panel**.

To reactivate, follow the same procedure, except for step 4. Click on **Activate Panel** instead.

Every time you start Windows the LifeBook Application Panel is activated, even if you deactivated it before you shut down.

3

Getting Started

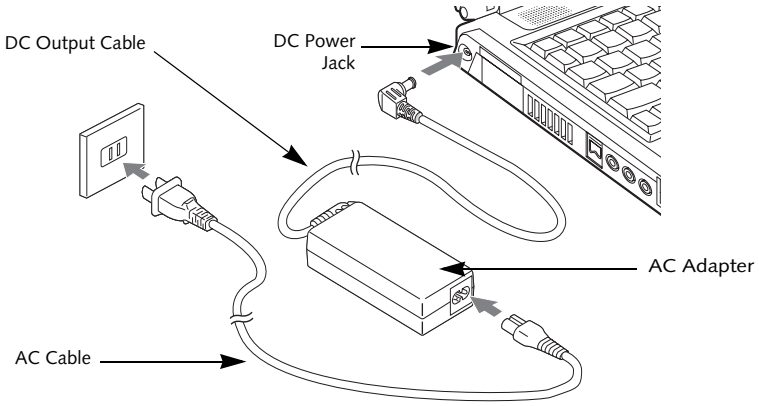

Figure 3-1 Connecting the AC Adapter

Power Sources

Your Fujitsu LifeBook notebook has three possible power sources: a primary Lithium ion battery, an AC adapter or an optional Auto/Airline adapter.

CONNECTING THE POWER ADAPTERS

The AC adapter or optional Auto/Airline adapter provides power for operating your notebook and charging the batteries.

Connecting the AC Adapter

1. Plug the DC output cable into the DC power jack of your LifeBook notebook.
2. Plug the AC adapter into an AC electrical outlet. *(Figure 3-1)*

Connecting the Optional Auto/Airline Adapter

1. Plug the DC output cable into the DC power jack on your notebook.
2. Plug the Auto/Airline adapter into the cigarette lighter of an automobile with the ignition key in the On or Accessories position.

   OR
3. Plug the Auto/Airline adapter into the DC power jack on an airplane seat.

Switching from AC Adapter Power or the Auto/Airline Adapter to Battery Power

1. Be sure that you have at least one charged battery installed.
2. Remove the AC adapter or the Auto/Airline adapter.

The Lithium ion battery is not charged upon purchase. Initially, you will need to connect either the AC adapter or the Auto/Airline adapter to use your notebook.

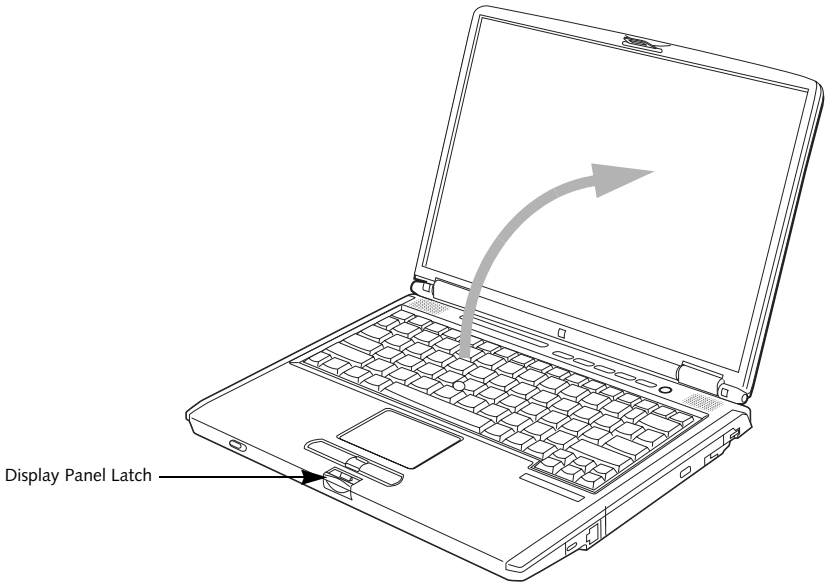

Figure 3-2 Opening the Display Panel

Display Panel

Your Fujitsu LifeBook notebook contains a display panel that is backlit for easier viewing in bright environments and maintains top resolution through the use of active-matrix technology.

OPENING THE DISPLAY PANEL

1. Press the Display Panel latch. This releases the locking mechanism and raises the display slightly.
2. Lift the display backwards, being careful not to touch the screen, until it is at a comfortable viewing angle. *(Figure 3-2)*

ADJUSTING DISPLAY PANEL BRIGHTNESS

Once you have turned on your LifeBook notebook, you may want to adjust the brightness level of the screen to a more comfortable viewing level. There are two ways to adjust the brightness, by using the keyboard or the power management utility.

Using the Keyboard

Adjusting the brightness using the keyboard changes the setting only temporarily.

- [Fn+F6]: Pressing repeatedly will lower the brightness of your display.
- [Fn+F7]: Pressing repeatedly will increase the brightness of the display.

- When using AC power your brightness setting is set to its highest level by default. When using battery power your brightness setting is set to approximately mid-level by default.
- The higher the brightness level, the more power the notebook will consume and the faster your batteries will discharge. For maximum battery life, make sure that the brightness is set as low as possible.

CLOSING THE DISPLAY PANEL

1. Holding the edge of your display panel, pull it forward until it is flush with the body of your LifeBook notebook.
2. Push down until you hear a click. This will engage the locking mechanism and prevent your display panel from opening unexpectedly.

Starting Your LifeBook Notebook

POWER ON

Power/Suspend/Resume Button

The Power/Suspend/Resume button is used to turn on your LifeBook notebook from its off state. Once you have connected your AC adapter or charged the internal Lithium ion battery, you can power on your LifeBook notebook. *(See figure 2-3 on page 6 for location)*

When you turn on your LifeBook notebook be sure you have a power source. This means that at least one battery is installed and charged, or that the AC or Auto/Airline adapter is connected and has power.

To turn on your LifeBook notebook from its off state, press the Power/Suspend/Resume button, located above the keyboard. When you are done working you can either leave your LifeBook notebook in Suspend mode, *(See Suspend Mode on page 32 for more information)*, or you can turn it off *(See Power Off on page 33 for more information)*.

Do not carry your LifeBook notebook around with the power on or subject it to shocks or vibration, as you risk damaging your notebook.

When you power on your LifeBook, it will perform a Power On Self Test (POST) to check the internal parts and configuration for correct functionality. If a fault is found, your LifeBook notebook will emit an audio warning and/or an error message will be displayed. *(See Power On Self Test Messages on page 64 for more information)*
Depending on the nature of the problem, you may be able to continue by starting the operating system or by entering the BIOS setup utility and revising the settings.

After satisfactory completion of the Power On Self Test (POST), your notebook will load your operating system.

Never turn off your LifeBook notebook during the Power On Self Test (POST) or it will cause an error message to be displayed when you turn your LifeBook notebook on the next time. *(See Power On Self Test Messages on page 64 for more information)*

BOOT SEQUENCE

The procedure for starting up your notebook is called the Bootup sequence and involves your notebook's BIOS. When your LifeBook notebook is first turned on, the main system memory is empty, and it needs to find instructions to start up your notebook. This information is in the BIOS program. Each time you power up or restart your notebook, it goes through a boot sequence which displays a Fujitsu logo until your operating system is loaded. During booting, your notebook is performing a standard boot sequence including a Power On Self Test (POST). If the sequence is completed without a failure and without a request for the BIOS Setup Utility, the system displays the operating system's opening screen.

The boot sequence is executed when:

- You turn on the power to your LifeBook notebook.
- You restart your notebook from the Windows Shut Down dialog box.
- The software initiates a system restart. Example: When you install a new application.
- You reset the system by pressing [CTRL+ALT+DEL].

BIOS SETUP UTILITY

The BIOS Setup Utility is a program that sets up the operating environment for your LifeBook notebook. Your BIOS is set at the factory for normal operating conditions, therefore there is no need to set or change the BIOS' environment to operate your notebook.

The BIOS Setup Utility configures:

- Device control feature parameters, such as changing I/O addresses and boot devices.
- System Data Security feature parameters, such as passwords.

Entering the BIOS Setup Utility

To enter the BIOS Setup Utility do the following:

1. Turn on or restart your LifeBook notebook.
2. Press the [F2] key once the Fujitsu logo appears on the screen. This will open the main menu of the BIOS Setup Utility with the current settings displayed.
3. Press the [RIGHT ARROW] or [LEFT ARROW] key to scroll through the other setup menus to review or alter the current settings.

BIOS Guide

A guide to your notebook's BIOS is available online. Please visit our service and support Web site at **us.fujitsu.com/computers**. Once there, select Support, then select Notebooks under User's Guides. Select LifeBook BIOS Guides from the pull-down menu for your LifeBook series. If you are unsure of your notebook's BIOS number, refer to your packing slip.

If your data security settings require it, you may be asked for a password before the BIOS main menu will appear.

BOOTING THE SYSTEM

We strongly recommend that you do not attach any external devices and do not put a DVD/CD in any drive until you have gone through the initial power on sequence.

When you turn on your LifeBook notebook for the first time, it will display a Fujitsu logo on the screen. If you do nothing the system will load the operating system, and then the Windows Welcome will begin.

Designed to accommodate the needs of users in many different countries, Windows needs to be configured the first time you use it. Windows has three parts:

- Getting Started: You have the opportunity to enter custom information for your configuration file and setup your modem so that your LifeBook notebook will be prepared to dial out.
- Registration: Easy online registration for Windows with Microsoft, and for your LifeBook notebook with Fujitsu.
- Windows License Agreement and Final Settings: You have the opportunity to review the Windows.

Getting Started

Read the instructions on the screens carefully and fill in the information as directed. You will be asked for such items as the language you wish to use, the country in which you live, your first and last name, and about how you dial out from where you will be using your notebook. For the modem settings, enter your current location information where you will be using your LifeBook notebook. If you are not connected to a phone line and plan to register at a later time, you may click the **Skip** button, and you will go directly to the condition of use page.

Make sure you have connected a phone line to your modem before you use E-Registration.

Once you have set up your notebook to dial out, Windows will make a free telephone call which will test these settings. If the call is unsuccessful, you will be returned to the phone settings page where you may try to fix them. If you are unable to fix the settings please contact Fujitsu Service and Support. *(See Fujitsu Contact Information on page 1 for more information)* If you would simply like to move on, and register at a later time, you may click the **Skip** button, and you will go directly to the Condition of Use page.

Registration

If your connection is successful, you will go to the Registration Confirmation page. On this page simply enter the requested information, and then check the box at the bottom to register your copy of Windows with Microsoft. Once you have finished, click the **Next** button to continue.

If you do not register at this time you can do it later simply by double-clicking on the **LifeBook Registration** icon on your desktop and following the instructions.

You will then go through the Fujitsu registration process. Follow the instructions on the screens, and enter all of the necessary information. Be as specific as possible so that if you need help the service and support team will be able to serve you better.

Final Settings

The first part of your final settings is the Windows End User License Agreement. Read the agreement carefully. When you finish reading you must accept or reject the terms of the agreement and then click on the **Next** button.

If you reject the terms of the license agreement you will be asked to review the license agreement for information on returning to Windows or to shut down your LifeBook notebook.

WINDOWS PRODUCT ACTIVATION (WINDOWS XP ONLY)

If your system has Windows XP as an operating system, it has already been pre-installed and pre-activated when you receive the system.

In the event you need to re-install Windows XP (e.g., after making significant configuration changes), it may be necessary to reactivate the operating system. To do so, use the following information.

- After re-installing Windows XP, you have thirty days to activate it. Product activation ensures that you are the authorized owner of the Windows XP operating system.
- Until you activate the product, you will be prompted whenever you turn on the system that activation is required. Follow the on-screen directions to activate your operating system. The product only needs to be

activated once, unless significant hardware changes are made to your system.

- Note that Product Activation and Registration are not the same thing. Registration is optional, whereas Product Activation is a required procedure.

REGISTERING YOUR LIFEBOOK NOTEBOOK

How do I register?

To register, visit our Web site at:
us.fujitsu.com/computers

INSTALLING CLICK ME!

The first time you boot up your system, you will see an icon called Click Me! in the Start menu. When you click the Click Me! icon, your system will automatically build the icon tray in the bottom right of the screen. These icons provide links to utilities that you will frequently access.

Click Me! will install additional system utilities to maximize the performance of your system.

Power Management

Your Fujitsu LifeBook notebook has many options and features for conserving battery power. Some of these features are automatic and need no user intervention, such as those for the internal modem. However, others depend on the parameters you set to best suit your operating conditions, such as those for the display brightness. Internal power management for your notebook may be controlled from settings made in your operating system, pre-bundled power management application, or from settings made in BIOS setup utility.

Besides the options available for conserving battery power, there are also some things that you can do to prevent your battery from running down as quickly. For example, you can create an appropriate power saving profile, put your notebook into Suspend mode when it is not performing an operation, and you can limit the use of high power devices. As with all mobile, battery powered computers, there is a trade-off between performance and power savings.

POWER/SUSPEND/RESUME BUTTON

When your LifeBook notebook is active, the Power/Suspend/Resume button can be used to manually put your notebook into Suspend mode. Push the Power/Suspend/Resume button when your notebook is active, but not actively accessing anything, and immediately release the button. You will hear two short beeps and your system will enter Suspend mode. *(See figure 2-3 on page 6 for location)*

If your LifeBook is suspended, pushing the Power/Suspend/Resume button returns your notebook to active operation. You can tell whether the system is Suspended by looking at the Power indicator. *(See figure 2-3 on page 6)* If the indicator is visible and not flashing, your notebook is fully operational. If the indicator is visible *and* flashing, your notebook is in Suspend mode. If the indicator is not visible, the power is off or your notebook is in Hibernation mode. *(See Hibernation Feature)*

SUSPEND MODE

Suspend or Standby mode in Windows saves the contents of your LifeBook notebook's system memory during periods of inactivity by maintaining power to critical parts. This mode will turn off the CPU, the display, the hard drive, and all of the other internal components except those necessary to maintain system memory and allow for restarting. Your notebook can be put in Suspend mode by:

- Pressing the Power/Suspend/Resume button when your system is turned on.
- Selecting Standby from the Windows Shut Down menu.
- Timing out from lack of activity.
- Allowing the battery to reach the Dead Battery Warning condition.

Your notebook's system memory typically stores the file on which you are working, open application information, and any other data required to support operations in progress. When you resume operation from Suspend mode, your notebook will return to the point where it left off. You must use the Power/Suspend/Resume button to resume operation, and there must be an adequate power source available, or your notebook will not resume.

- If you are running your LifeBook notebook on battery power, be aware that the battery continues to discharge while your notebook is in Suspend mode, though not as fast as when fully operational.
- Disabling the Power/Suspend/Resume button prevents it from being used to put your LifeBook notebook in Suspend or Hibernation (Save-to-Disk) mode. The resume function of the button cannot be disabled.
- The Suspend or Hibernation (Save-to-Disk) mode should not be used with certain PC Cards. Check your PC Card documentation for more information. When PC Cards or external devices are in use, Hibernation (Save-to-Disk) mode cannot return to the exact state prior to suspension, because all of the peripheral devices will be re-initialized when the system restarts.
- If your LifeBook notebook is actively accessing information when you enter the Suspend or Hibernation (Save-to-Disk) mode, changes to open files are not lost. The files are left open and memory is kept active during Suspend mode or the memory is transferred to the internal hard drive during Hibernation mode.

The main advantage of using the Hibernation (Save-to-Disk) function is that power is not required to maintain your data. This is particularly important if you will be leaving your LifeBook notebook in a suspended state for a prolonged period of time. The drawback of using Hibernation mode is that it lengthens the power down and power up sequences and resets peripheral devices.

HIBERNATION (SAVE-TO-DISK) FEATURE

The Hibernation feature saves the contents of your LifeBook notebook's system memory to the hard drive as a part of the Suspend/Resume mode. You can enable or disable this feature.

Enable or Disable the Hibernation Feature

The default settings is not enabled. To enable or disable the Hibernation feature follow these easy steps:

1. From the **Start** menu, select **Settings**, and then select **Control Panel**.
2. From the **Control Panel** select **Power Options**.
3. Select the **Hibernation** tab. Select the box to enable or disable this feature.

Using the Hibernation Feature

1. From the **Start** menu, select **Settings**, and then select **Control Panel**.
2. From the **Control Panel** select **Power Options**.
3. Select the **Advanced** tab. Select **Hibernate** from the pull down menu for Power buttons.

DISPLAY TIMEOUT

The Video Timeout is one of the power management parameters. This feature saves power by turning off the display if there is no keyboard or pointer activity for the user selected timeout period. Any keyboard or pointer activity will cause the display to restart automatically. This feature is independent of the Power/Suspend/Resume button and can be enabled and disabled in Windows and BIOS setup utility. *(See BIOS Setup Utility on page 29 for more information)*

HARD DISK TIMEOUT

The Hard Disk Timeout is another one of the power management parameters. This feature saves power by turning off the hard drive if there is no hard drive activity for the user selected timeout period. Any attempt to access the hard drive will cause it to restart automatically. This feature is independent of the Power/Suspend/Resume button and can be enabled and disabled in Windows and BIOS setup utility. *(See BIOS Setup Utility on page 29 for more information)*

WINDOWS POWER MANAGEMENT

Power Management

The Power Management icon located in the Windows Control Panel allows you to configure some power management settings. For example, you can use Power Management to set the timeout values for turning off the display and hard disks whether you are running the notebook on battery power or one of the adapters. The settings may also be changed in the BIOS. *(See BIOS Setup Utility on page 29 for more information)*

RESTARTING THE SYSTEM

If your system is on and you need to restart it, be sure that you use the following procedure.

1. Click the **Start** button, and then click **Shut Down**.
2. Select the **Restart** option from within the Windows Shut Down dialog box.
3. Click **OK** to restart your notebook. Your notebook will shut down and then reboot.

Turning off your notebook without exiting Windows, or turning it on within 10 seconds of being shut off may cause an error when you start the next time.

POWER OFF

Before turning off the power, check that the Hard Drive, optical drive, PC Card, and Floppy Disk indicators are all Off. *(See figure 2-3 on page 6)*. If you power-off while accessing a disk or PC Card there is a risk of data loss. To ensure that the notebook shuts down without error, use the Windows shutdown procedure.

Be sure to close all files, exit all applications, and shut down your operating system prior to turning off the power. If files are open when you turn the power off, you will lose any changes that have not been saved, and may cause disk errors.

Using the correct procedure to shut down from Windows allows your notebook to complete its operations and turn off power in the proper sequence to avoid errors. The proper sequence is:

1. Click the **Start** button, and then click **Shut Down** or **Turn Off Computer**.
2. Select the **Shut Down** option from within the Windows Shut Down dialog box.
3. Click **OK** to shut down your notebook.

If you are going to store your notebook for a month or more see Care and Maintenance Section.

4

User-Installable Features

Lithium ion Battery

Your LifeBook notebook has a Lithium ion battery that provides power for operating your notebook when no external power source is available. The battery is durable and long lasting, but should not be exposed to extreme temperatures, high voltages, chemicals or other hazards.

The Lithium ion battery operating time may become shorter if it is used under the following conditions:

- When used at temperatures that exceeds a low of 5°C or a high of 35°C. Extreme temperatures not only reduce charging efficiency, but can also cause battery deterioration. The Charging icon on the Status Indicator panel will flash when you try to charge a battery that is outside its operating temperature range. *(See Battery Charging Indicators on page 12 for more information)*
- When using a high current device such as a modem, Super-Multi DVD drive, CD-ROM drive, DVD/CD-RW combo drive, or the hard drive, using the AC adapter will conserve your battery life.

Do not leave a faulty battery in your LifeBook notebook. It may damage your AC adapter, optional Auto/Airline adapter, another battery or your notebook itself. It may also prevent operation of your notebook by draining all available current into the bad battery.

- Actual battery life will vary based on screen brightness, applications, features, power management settings, battery condition and other customer preferences. CD-ROM drive, Super-Multi DVD drive, DVD/CD-RW drive combo, or hard drive usage may also have a significant impact on battery life. The battery charging capacity is reduced as the battery ages. If your battery is running low quickly, you should replace it with a new one.
- Under federal, state, or local law it may be illegal to dispose of batteries by putting them in the trash. Please take care of our environment and dispose of batteries properly. Check with your local government authority for details regarding recycling or disposing of old batteries. If you cannot find this information elsewhere, contact your support representative at 1-800-8FUJITSU (1-800-838-5487)

RECHARGING THE BATTERIES

If you want to know the condition of the primary Lithium ion battery, check the Battery Level indicator located on the Status Indicator panel. The indicator changes as the battery level changes.

The Lithium ion battery is recharged internally using the AC adapter or Auto/Airline adapter. To recharge the battery make sure the battery that needs to be charged is installed in your LifeBook notebook and connect the AC or Auto/Airline adapter.

Make sure that the Battery Charging indicator and the percentage charge is shown inside the Battery Level icon on the Status Indicator Panel.

There is no memory effect on the Lithium ion battery therefore you do not need to discharge the battery completely before recharging. The charge times will be significantly longer if your notebook is in use while the battery is charging. If you want to charge the battery more quickly, put your notebook into Suspend mode, or turn it off while the adapter is charging the battery. *(See Power Management on page 32 for more information on Suspend mode and shutdown procedure)*

Using heavy current devices such as Modem or frequent DVD/CD-RW/CD-ROM accesses may prevent charging completely.

Low Battery State

When the battery is running low, a low battery notification message will appear. If you do not respond to the low battery message, the batteries will continue to discharge until they are too low to operate. When this happens, your notebook will go into Suspend mode. There is no guarantee that your data will be saved once the notebook reaches this point.

- Once the low battery notification message appears, you need to save all your active data and put your LifeBook notebook into Suspend mode until you can provide a new power source. You should provide a charged battery, an AC power adapter, or Auto/Airline adapter as soon as possible.
- When you are in Suspend mode there must always be at least one power source active. If you remove all power sources while your LifeBook notebook is in Suspend mode, any data that has not been saved to the hard drive will be lost.

Dead Battery Suspend mode shows on the Status indicator just like the normal Suspend mode. Once your notebook goes into Dead Battery Suspend mode you will be unable to resume operation until you provide a source of power either from an adapter, or a charged battery. Once you have provided power, you will need to press the Power/Suspend/Resume button to resume operation.

In the Dead Battery Suspend mode, your data can be maintained for some time, but if a power source is not provided promptly, the Power indicator will stop flashing and go out, meaning that you have lost the data that was not stored. Once you provide power, you can continue to use your notebook while an adapter is charging the battery.

Shorted Batteries

The Status Indicator panel uses a symbol inside the battery outline of the Battery Level indicator to display the operating level available in that battery. *(See figure 2-9 on page 11)* If this display shows a Shorted Battery, it means the battery is damaged and must be replaced so it does not damage other parts of your LifeBook notebook.

REPLACING THE BATTERY

With the purchase of an additional battery, you can have a fully charged spare to swap with one that is not charged. There are two ways to swap batteries, cold-swapping and hot-swapping:

Cold-swapping Batteries

To cold-swap batteries in your battery bay follow these easy steps: *(Figure 4-1)*

1. Have a charged battery ready to install.
2. Shut down your notebook and disconnect the AC adapter.
3. Unlock the battery bay release latch by pushing the latch release away from the battery pack and sliding the battery bay release latch towards the latch release *(Figure 4-1)*.
4. Continue to press the latch release button away from the battery pack, and lift the battery out of the bay by inserting a thumbnail under the edge of the battery at the lift slot.
5. Slide a new battery into the bay.
6. Slide the battery bay release latch back to its original position to lock the battery into place.
8. Plug in the AC adapter and turn the power on.

Hot-swapping Batteries

To hot-swap batteries in your battery bay follow these easy steps: *(Figure 4-1)*

Be sure to plug in an AC Adapter prior to removing the battery. There is no bridge battery present to support the system while the battery is being replaced. If you do not use an AC Adapter you will lose any unsaved files.

1. Plug an AC Adapter into the system and connect it to a power outlet.

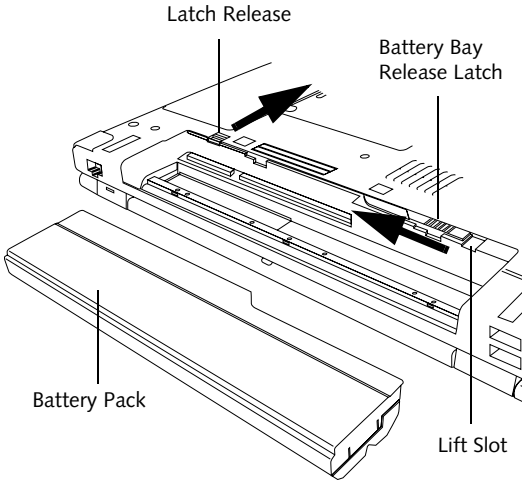

Figure 4-1. Removing a Battery

2. Follow steps 3 through 5 in “Cold Swapping Batteries”.

If the Lithium ion battery connector is not fully seated, you may not be able to use your notebook or charge your battery.

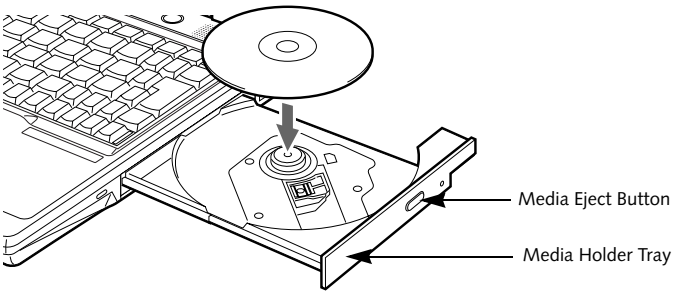

Figure 4-2. Optical Drive

Optical Drive

There is a variety of media available to use with your system, depending upon the system configuration you have selected. Super-Multi DVD drives, DVD/CD-RW Combo drives, and CD-ROM drives are collectively known as "optical drives".

A CD-R or DVD-R disc can only be written to once; CD-RW or DVD-RW discs can be written to over and over. CD-R and CD-RW discs hold up to 700MB of data. DVD-R and DVD-RW discs hold up to 4.7 GB of data.

Depending upon the configuration of your LifeBook notebook, you may have one of the following drives:

- **Super-Multi DVD:** The Super-Multi DVD drive combines seven recordable formats in a single drive (DVD-R, DVD+R, DVD-RW, DVD+RW, DVD-RAM, CD-R, and CD-RW), making it the most versatile drive to date.
- **DVD/CD-RW combo:** A DVD/CD-RW combo drive allows you to access movie, software, data, or audio DVD/CDs, and to write data onto recordable CD-R and CD-RW discs.
- **CD-ROM:** A CD-ROM drive allows you to access software, data, or audio CDs.

Install your media player software before first using the DVD, DVD/CD-RW, or CD-ROM media drives. Refer to the applicable readme file on the Driver Applications CD-ROM.

MEDIA PLAYER SOFTWARE

Super-Multi DVD model only: With the Super-Multi DVD drive and media player software you can play DVD movies and music CDs on your LifeBook notebook. The media player includes controls which allow you to take full advantage of the features of a DVD movie, as well as standard features such as fast forward, fast reverse, pause, etc. With this drive you can also burn onto recordable DVD-R/RW, DVD+R/RW, or CD-R/RW discs.

DVD/CD-RW Combo model only: With the combo drive, you can play DVD movies, read audio CDs, and write data onto recordable CD-R or CD-RW discs.

CD-ROM model only: With the CD-ROM drive, you can read software, audio, or data CD discs.

- Do not operate your optical drive unless your LifeBook notebook is sitting on a flat surface. Using a drive when the system is not level may damage the drive or prevent proper operation.
- Prolonged use of the optical drive, such as watching a DVD movie, will substantially reduce your battery life if no other power source is attached.

LOADING MEDIA ON YOUR DRIVE

To load a disc into your optical drive:

1. Push and release the eject button on the front of the optical drive to open the holder tray. The tray will come out of the LifeBook notebook a short distance.
2. Gently pull the tray out until a media disc can easily be placed in the tray.

There may be a protective sheet in the tray from when it was shipped; please make sure it is removed before operating the drive.

- You should periodically check the Fujitsu web site at us.fujitsu.com/computers for current updated drivers.
- All LifeBook DVD players are set to play DVD titles with region code number 1 which is specified for the North American market. The region number is a regional restriction code defined by the DVD Forum acting on Hollywood requirements. Different region codes are recorded on video DVD titles for publication in different areas of the world. If the regional code of the DVD player does not match the regional codes on the titles, then playback is impossible.
- You can change the region code on the DVD player using the Properties menu of the DVD software. Note, however, that **you can only change the region code up to four times.** After the fourth change, the last region code entered becomes permanent, and cannot be changed.

3. Place the media into the tray, label side up, with the hole in the center of the disc. Snap the disc onto the raised circle in the center of the tray.
4. Gently push the holder tray back in until you hear a click. *(Figure 4-3)*

If you have disabled the Auto Insert Notification Function, you will have to start the drive from your desktop, since your LifeBook notebook will not automatically recognize that media has been loaded.

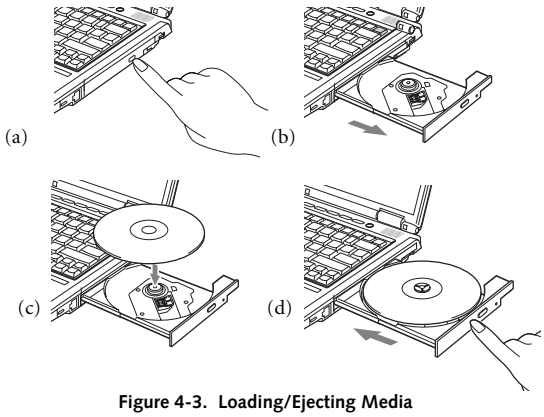

Figure 4-3. Loading/Ejecting Media

REMOVING MEDIA

1. Push and release the eject button on the front of the optical drive. This will stop the drive and the holder tray will come out of the LifeBook notebook a short distance.
2. Gently pull the tray out until the disc can easily be removed from the tray.
3. Carefully remove the media disc from the holder tray.
4. Gently push the holder tray back in until you hear a click.

USING THE MEDIA PLAYER SOFTWARE

Depending upon its configuration, your system may not have the media player software pre-installed. If it is not installed, reference the documentation that accompanies the media application.

Starting a DVD Movie (DVD Models only)

1. Insert the DVD movie into the optical drive of your notebook. If the CD AutoRun feature activates, skip Step 2.
2. The first time you insert a movie into the DVD/CD-RW tray, you will be prompted to select what you want the system to do when discs are inserted (e.g., start automatically or wait for a prompt). Until you make a selection, you will receive the same prompt whenever you insert a disc.
3. Click **OK** to close the About DVD Player Performance dialog box and the movie will begin.

Opening the Media Player Control Panel

With most DVD-ROMs, you have the option of altering how the movie should play and what you wish to view. You can do this by using the media player control panel and the mouse.

1. Right-click on the movie screen to open a dropdown menu for options.
2. Select **View,** then **Player** for all the controls available. This will open the control panel into the bottom of the screen.

Using the Media Player Control Panel

The media player software allows you to watch the movie much like a VCR player. You can pause, rewind, fast-forward and stop the movie at any point.

1. To Pause the movie, click the on-screen ⏸ button.
2. To Rewind the movie, click the ◀◀ button to rewind to a specific portion of the movie, or the ⏮ button to return to the opening screen.

3. To Fast-forward the movie, click the ⏩ button to forward to a specific portion of the movie, or the ⏭ button to jump to the ending credits.
4. To Stop the movie, click the ■ button.

Exiting the Media Player

1. Click the ✕ located in the upper right corner of the title bar. This will open a media player dialog box.
2. Click Yes to stop and exit the movie, or No to close the media player dialog box and return to the movie.

USING DOLBY™ HEADPHONE

The Dolby Headphone utility lets you enjoy multi-channel sound sources with realistic surround sound using your *conventional* stereo headphones.

Dolby Headphone is a signal processing system that enables your stereo headphones to realistically portray the sound of a five-speaker playback system.

- Media discs which do not have the Dolby Surround 5:1 symbol will not support Dolby Headphone.
- After making changes to the Dolby Headphone feature and clicking OK, wait at least ten seconds before making another change in order to allow the system to stabilize.

To use the Dolby Headphone feature, perform the following steps:

1. Insert the disc in the media player tray. When you do so, WinDVD will start automatically.
2. Click on the Fujitsu logo on the WinDVD control panel. If the disc supports Dolby Surround 5.1, a drop down menu appears.
3. Verify that Dolby headphones is checked on the menu. If you do not want it active, select Disable.

USING MEDIA PLAYER ON BATTERY POWER

Since optical drives consume a lot of power, your overall battery life will be significantly shorter when operating the optical drive continuously (such as watching a DVD movie) than during standard operation. Many movies run-times are longer than your LifeBook notebook can support on a single charged battery. If you are watching a DVD movie on battery power you may need to swap in an additional, charged battery or attach AC power during the movie to view it in its entirety.

- Prolonged use of the optical drive, such as watching a DVD movie, will greatly reduce your notebook's battery life.
- Many movie run-times are longer than your system can support on a single battery. If you are watching a DVD movie on battery power you may need to swap in an additional, charged battery or attach AC power during the movie to view it in its entirety.
- An additional fully-charged battery is highly recommended if you will be watching DVD movies on battery power. If you don't have an additional battery, you may purchase one either online at us.fujitsu.com/computers or by calling 1-877-372-3473.

To Watch a Movie on Battery Power:

1. Have an additional full-charged battery or your AC adapter ready for use.
2. Start watching your DVD movie.
3. When the low battery warning occurs, immediately stop the movie and exit the media player.

If you do not stop the media player quickly and the LifeBook notebook attempts to auto-suspend (critical battery low state) the LifeBook notebook will shut down improperly. If this occurs, you will need to perform a hard reset and follow the instruction, if any, presented to you before the system will reboot.

4. Power down your LifeBook notebook and replace the discharged battery with an additional fully-charged battery. If you do not have an additional battery, you may attach AC power as soon as you see the low battery warning.
5. Resume your LifeBook notebook by pressing the Suspend button again. This is not required if you attached AC power without entering suspend mode.
6. Restart your media player, locate and skip to the chapter of the movie you were last watching.
7. Continue watching your DVD movie.

Some shorter DVD movies may not require you to swap batteries or attach AC power to complete them. However, it is best to be prepared since actual battery life while operating the optical drive cannot be guaranteed.

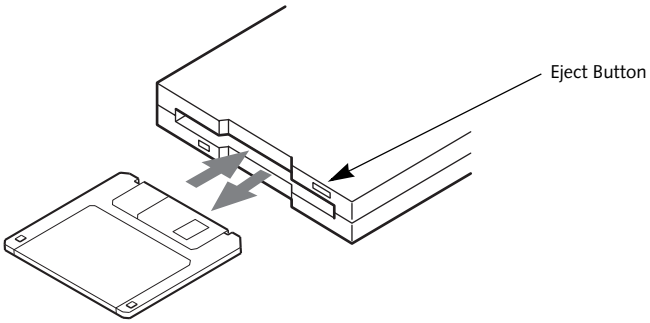

Figure 4-4.Loading/Ejecting a 3.5" Floppy Disk

External USB Floppy Disk Drive

An external USB floppy disk drive is available as an option for your LifeBook notebook. The external floppy disk drive can read and write information on removable 1.44MB and 720KB floppy disks.

Your LifeBook notebook is preconfigured to boot from a USB floppy drive. Reference the BIOS manual for further information on changing the default boot drive. The BIOS manual can be found on the Fujitsu Computer Systems web site: us.fujitsu.com/computers, under Support.

LOADING A DISK

To load a disk into your disk drive, follow these easy steps:

1. Orient the disk so that its label is facing upwards and the shutter side is pointing towards the drive. *(Figure 4-4)*
2. Push the disk into the drive until the Eject button pops out and you hear a click.

When there is no disk in the drive, the Eject button is flush with your notebook.

EJECTING A DISK

To eject a disk from the disk drive, follow these easy steps:

1. Check that the Floppy Disk Drive Access indicator is inactive.
2. Press the Eject button. This will push your disk partially out of the drive.
3. Remove the disk.

If you eject the disk while the Floppy Disk Drive Access indicator is active, there is a risk of damaging the data on the disk, the disk itself or even the disk drive.

PREPARING A DISK FOR USE

Before you can use a new disk, it needs to be prepared so your LifeBook notebook knows where to store information. This preparation is called formatting or initializing a disk. You will need to format new disks, unless they are preformatted. *(Please refer to your operating system manual for step-by-step instructions on formatting a disk)*

To prevent accidental erasure of the data stored on a disk, slide the "write protect" tab until a small hole is exposed. This sets the disk into a protected state where nothing can be added or removed. If you want to add or remove data on a protected disk, slide the "write protect" tab to close the small hole. *(Figure 4-5)*

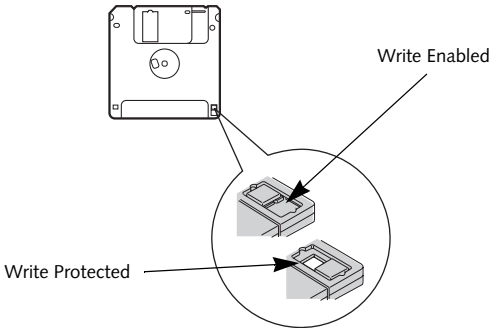

Figure 4-5. Floppy Disk Write Protect

Formatting a floppy disk that already contains data will erase all of the information on the disk.

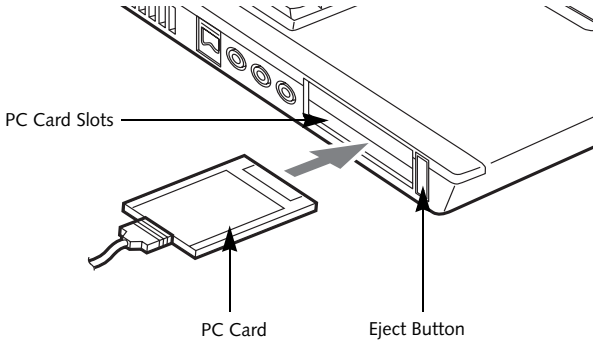

Figure 4-6. Installing/Removing PC Cards

PC Cards

Your Fujitsu LifeBook notebook supports two Type I or Type II PC Cards or one Type III PC Card, which can perform a variety of functions.

Some available PC Cards:

- 4-in-1 media card adapter
- Compact Flash media card adapter
- Fax/data modem cards
- Local area network (LAN) cards
- IDE solid-state disk cards
- SCSI cards
- Smart Card holder
- Other PC Cards that conform to PCMCIA 2.1 or CardBus standards

For further information, refer to the instructions supplied with your PC Card.

INSTALLING PC CARDS

PC Cards are installed in the PC Card slot. To install a PC Card, follow these easy steps: *(Figure 4-6)*

- Installing or removing a PC Card during your LifeBook notebook's shutdown or bootup process may damage the card and/or your notebook.
- Do not insert a PC Card into a slot if there is water or any other substance on the card as you may permanently damage the card, your LifeBook notebook, or both.
- Be sure to orient the card properly before inserting it. Failure to do so could result in damage to the card socket.

1. See your PC Card manual for specific instructions on the installation of your card. Some PC Cards may require your notebook to be Off while installing them.
2. Make sure there is no PC Card currently in the slot. If there is, see Removing PC Cards.
3. Insert your PC Card into the slot, with the product label facing up.
4. Push the card into the slot firmly until it is seated in the opening. You will hear a click and the Eject button will pop away from your notebook.
5. Flip the Eject button towards the rear of your notebook to lock the PC Card.

REMOVING PC CARDS

To remove a PC Card, follow these easy steps:

1. See your PC Card manual for specific instructions on removing your card. Some PC Cards may require your notebook to be in Suspend Mode or Off while removing them.

If the dialog box states that the device cannot be removed, you must save all of your open files, close any open applications and shut down your notebook.

2. Flip the Eject button towards the front of your notebook until it is fully extended, and then push it in until it is flush with the notebook. This will push the PC Card slightly out of the slot allowing you to remove the card.

If the PC Card has an external connector and cable, do not pull the cable when removing the card.

SMART CARD READER

An embedded Smart Card Reader is provided on your LifeBook notebook. Smart Cards are the same size and shape as credit cards, but they contain an integrated microprocessor chip. The chip can hold a variety of different information, and provides the user with many possible options, such as allowing them to make secure purchases, pay for phone calls, store security information, and provide personal identification and information.

In order to use the embedded Smart Card Reader, you must purchase an optional Smart Card adapter and third-party software for installation into an available Type II PC Card slot.

Memory Upgrade Module

Your Fujitsu LifeBook notebook comes with a minimum of 256 MB of high speed Double Data Rate Synchronous Dynamic RAM (DDR 333 SDRAM) factory installed. To increase your LifeBook notebook's memory capacity, you may install an additional memory upgrade module. The memory upgrade must be a dual-in-line (DIMM) SDRAM module. To ensure 100% compatibility, purchase the SDRAM module only from the Fujitsu web store at us.fujitsu.com/computers.

- Do not remove any screws from the memory upgrade module compartment except the ones specifically shown in the directions for installing and removing the memory upgrade module.
- The memory upgrade module can be severely damaged by electrostatic discharge (ESD). Be sure you are properly grounded when handling and installing the module.

INSTALLING MEMORY UPGRADE MODULES

1. Turn off power to your LifeBook notebook, remove any power adapter (AC or auto/airline), and remove the battery pack.
2. Make sure that all the connector covers are closed.
3. Turn the notebook bottom side up, and remove the screws of the memory upgrade module compartment. *(Figure 4-7)*
4. Remove the cover.

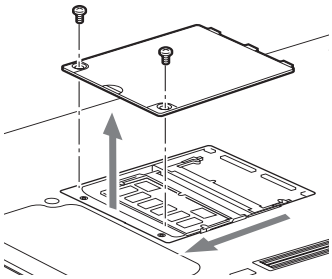

Figure 4-7. Opening the Memory Upgrade Compartment

5. Remove the memory upgrade module from the static guarded sleeve.
6. Align the memory upgrade module with the part side up. Align the connector edge of the memory upgrade module with the connector slot in the compartment.
7. Insert the memory upgrade module at a 45° angle. Press the connector edge of the module firmly down and into the connector until it lodges under the retaining clip. You will hear a click when it is properly in place. *(Figure 4-8)*

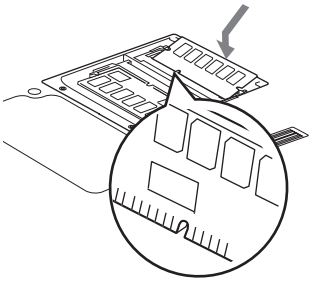

Figure 4-8. Installing a Second Memory Module

8. Replace the cover.*(Figure 4-9)*
9. Replace the screws.

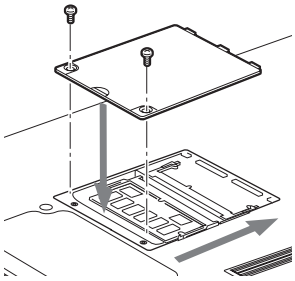

Figure 4-9. Replacing the Memory Compartment Cover

The memory upgrade module is not something you routinely remove from your notebook. Once it is installed, you can leave it in place unless you want to change system memory capacity.

TO REMOVE A MEMORY UPGRADE MODULE

1. Perform steps 1 through 4 of Installing a Memory Upgrade Module.
2. Pull the clips sideways away from each side of the memory upgrade module at the same time.
3. While holding the clips out, remove the module from the slot by lifting it up and pulling towards the rear of your notebook. *(Figure 4-10)*

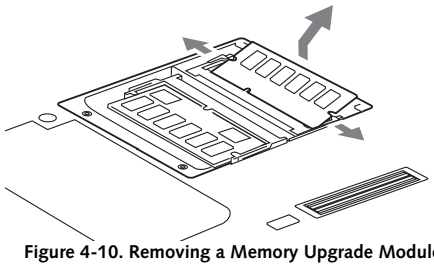

Figure 4-10. Removing a Memory Upgrade Module

4. Store the memory upgrade module in a static guarded sleeve.
5. Replace the cover. *(Figure 4-9)*
6. Replace the screws.

CHECKING THE MEMORY CAPACITY

Once you have changed the system memory capacity by replacing the installed module with a larger one, be sure to check that your notebook has recognized the change.

Check the memory capacity by clicking [Start] -> Settings -> Control Panel, then double-clicking the System icon. Select the General tab and check the amount of memory under “Computer:”.

There may be a variation between the actual memory size and what is displayed. This is due to the fact that your system uses a video graphics chip which dynamically allocates system memory to accelerate graphics performance. Up to 64 MB of memory is dynamically shared on an as-needed basis using Dynamic Video Memory Technology (DVMT).

If the total memory displayed is incorrect, check that your memory upgrade module is properly installed. *(If the module is properly installed and the capacity is still not correctly recognized, see Trouble-shooting on page 55.*

E Series.book Page 47 Wednesday, April 14, 2004 10:28 AM

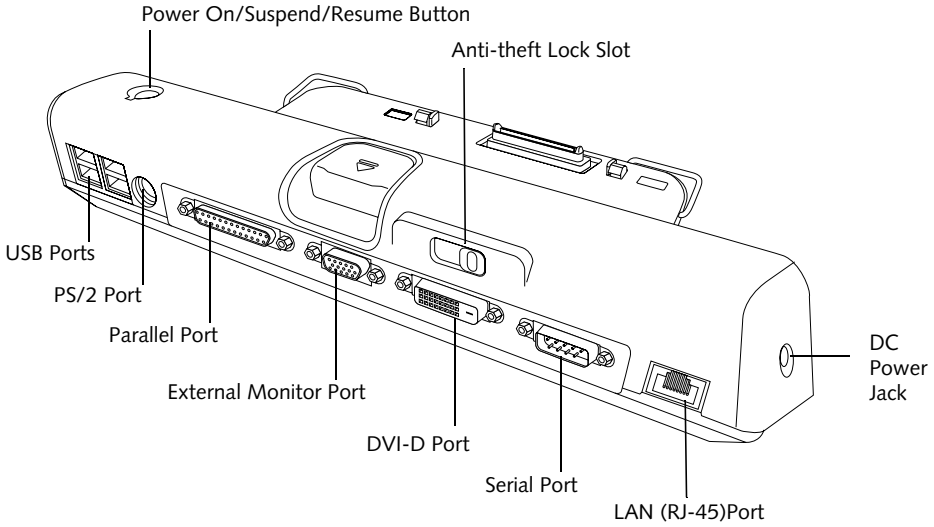

Figure 4-11. Port Replicator back panel

Port Replicator

An optional port replicator is available for your Fujitsu LifeBook notebook. The port replicator extends the functionality of your notebook by providing ports to connect PS/2 devices, a LAN (RJ-45) cable, USB devices, an external monitor, a parallel device, a digital video device, and a serial device. The port replicator connects to the bottom of your notebook. *(See Device Ports on page 50 for more information)*

BACK PANEL COMPONENTS

The following is a brief description of the port replicator's back panel components. *(Figure 4-11)*

LAN (RJ-45) Jack

The LAN port allows you to connect a LAN (RJ-45) cable. Note that when your notebook is connected to the port replicator, the LAN port on the system is not accessible; the port replicator LAN port is the only one that can be used when it as attached to the system.

PS/2 Keyboard/Mouse Port

The PS/2 keyboard/mouse port allows you to connect external PS/2 devices such as an external PS/2 keyboard or mouse.

USB Ports

There are four USB 2.0 ports on the port replicator. USB 2.0 ports allow you to connect any USB 2.0 device for up to 480 Mbps transfer rate. USB 2.0 is backward-compatible with USB 1.1 devices.

External Monitor Port

The external monitor port allows you to connect an external VGA or SVGA CRT monitor.

Parallel Port

The parallel port allows you to connect parallel devices. (This is sometimes referred to as an LPT port.)

Serial Port

The serial port allows you to connect serial (RS-232C) devices. (This is sometimes referred to as a COM port.)

DC Power Jack

The DC power jack allows you to plug in the AC adapter or the optional Auto/Airline adapter to power your notebook.

Anti-theft Lock Slot

The anti-theft lock slot allows you to lock the computer into the port replicator or to secure the port replicator alone.

Power On/Suspend/Resume Button

The power on/suspend/resume button allows you to poer on or suspend/resume your system via the port replicator.

Digital Video Interface (DVI-D)

The DVI-D port allows you to connect a flat-panel LCD monitor or television that is equipped with a DVI-D port for ultra-crisp digital images and graphics.

Port Replicator Release Button

Slide the port replicator release button to remove the port replicator from your notebook.

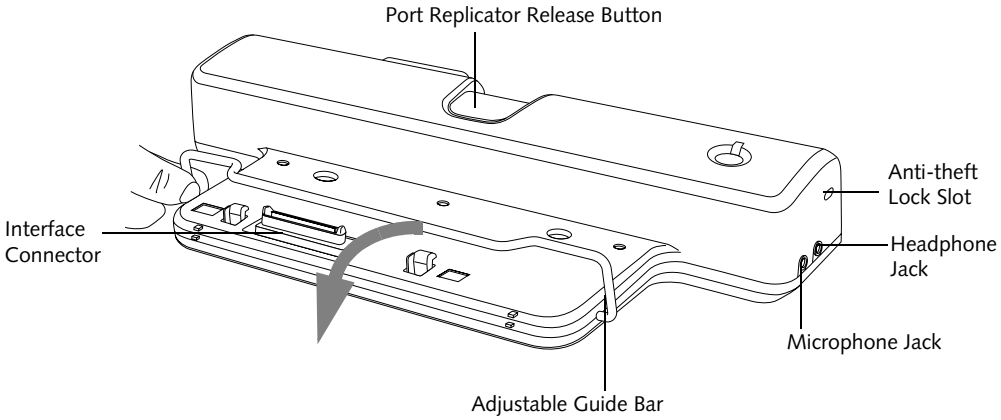

Figure 4-12. Port Replicator front panel

FRONT PANEL COMPONENTS

The following is a brief description of the optional Port Replicator's front panel components.

Interface Connector

The interface connector connects the optional port replicator to your notebook.

Adjustable Guide Bar

The adjustable guide bar allows you to use the port replicator with different LifeBook models.

Microphone Jack

The microphone jack allows you to attach an external microphone via the port replicator.

Headphone Jack

The headphone jack allows you to connect headphones to the port replicator.

Anti-theft Lock Slot

The anti-theft lock slot allows you to secure the port replicator with an optional security lock/cable.

Do not hold the system by the port replicator. The port replicator and/or the system could be damaged if the port replicator is used as a handle.

ATTACHING THE PORT REPLICATOR

The port replicator can be attached to your notebook while the power is on, while in suspend mode, or while the power is off.

The AC adapter must be plugged into the port replicator in order to use all of the ports. If the adapter is connected to the system, the USB and PS/2 ports on the port replicator will not be usable.

To attach the port replicator, follow these easy steps:

1. Unplug the AC adapter from the system if it is connected.
2. Depending upon the configuration of your system, you may need to change the position of the adjustable guide bar. Note the location of the interface port on the bottom of your LifeBook:
   - If the interface port is approximately an inch from the edge of the system, swing the guide bar backwards until it rests atop the port replicator base.
   - If the interface port is approximately two inches away from the edge of the system, swing the guide bar forward until it snaps into place inside the positioners. (See the grey arrow in Figure 2).
3. Center your notebook over the port replicator so that the interface connector on the lower surface of your notebook aligns with the connector on top of the port replicator *(Figure 4-13)*.
4. Push your notebook down to connect it securely to the port replicator.
5. Plug the AC adapter into the DC power jack and plug the other end into a power outlet.

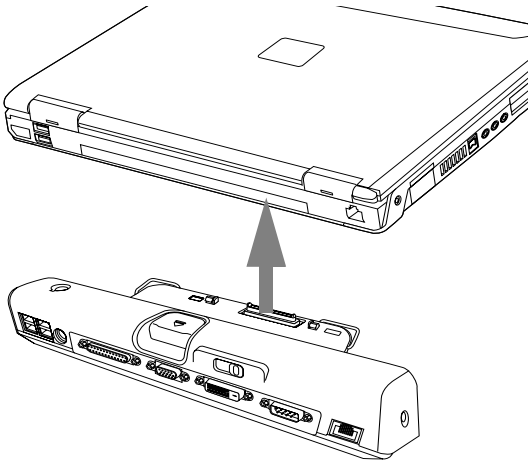

Figure 4-13. Attaching the Port Replicator

LOCKING THE PORT REPLICATOR

There are two anti-theft lock slots on the port replicator: one on the back *(Figure 4-11)* and one on the end *(Figure 4-12)*. Either slot can be used to secure the port replicator alone. The anti-theft lock slot on the back of the port replicator can also be used to lock the system into the port replicator.

Follow the instructions that came with the lock/cable device for information on its use.

To lock the system to the port replicator:

1. Install the system onto the port replicator as detailed in "Attaching the Port Replicator".
2. Slide the anti-theft lock slot on the rear of the port replicator all the way to the left to lock the system into place *(Figure 4-14)*.
3. Secure the lock per the instructions that came with the locking device. Until it is unlocked, the system and port replicator are locked together.

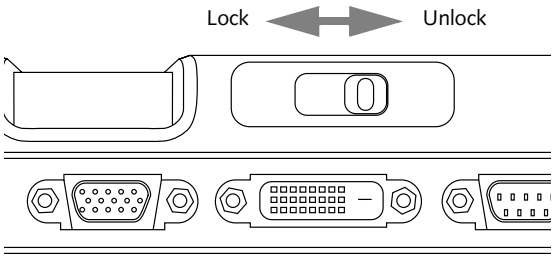

Figure 4-14. Locking the Port Replicator

DETACHING THE PORT REPLICATOR

The optional port replicator can be detached from your notebook while the power is on, while in suspend mode, or while the power is off. To detach the port replicator follow these easy steps:

1. Unlock the anti-theft lock if the system is locked into place.
2. Press the port replicator release button to release the system from the port replicator.
3. While holding the port replicator release button down, lift your notebook to detach it from the port replicator.

Device Ports

Your Fujitsu LifeBook notebook and the optional Port Replicator come equipped with multiple ports to which you can connect external devices including: disk drives, keyboards, modems, printers, etc.

MODEM (RJ-11) TELEPHONE JACK

The modem (RJ-11) telephone jack is used for an internal modem. To connect the telephone cable follow these easy steps:

1. Align the connector with the port opening.
2. Push the connector into the port until it is seated.
3. Plug the other end of the telephone cable into a telephone outlet. *(Figure 4-15)*

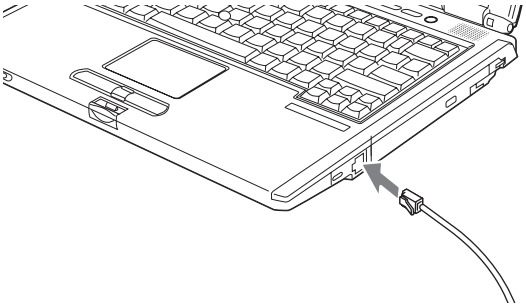

Figure 4-15. Connecting a Modem

The modem sound is deactivated by default, to activate modem sound follow these easy steps:

1. Right click on the Speaker icon in your system tray.
2. Select **Open Volume**.
3. Select **Option/Properties**.
4. Under "Show the following volume controls", click on **Phone** and click **OK**.
5. Uncheck the Mute box under Phone Balance.

The internal modem is not intended for use with Digital PBX systems. Do not connect the internal modem to a Digital PBX as it may cause serious damage to the internal modem or your entire LifeBook notebook. Consult your PBX manufacturer's documentation for details. Some hotels have Digital PBX systems. Be sure to find out BEFORE you connect your modem.

- The internal modem is designed to the ITU-T V.90 standard. Its maximum speed of 53000bps is the highest allowed by FCC, and its actual connection rate depends on the line conditions. The maximum speed is 33600bps at upload.
- The internal modem on all Fujitsu LifeBook notebooks from Fujitsu are certified for use in the United States and Canada. The modem may be certified in other countries.

INTERNAL LAN (RJ-45) JACK

The internal LAN (RJ-45) jack is used for a Gigabit (10Base-T/100Base-Tx/1000Base-T/Tx) Ethernet LAN connection. You may need to configure your notebook to work with your particular network. (Please refer to your network administrator for information on your network configuration.) To connect the LAN cable follow these easy steps:

1. Align the connector with the port opening.
2. Push the connector into the port until it is seated.*(Figure 4-16)*
3. Plug the other end of the cable into a LAN outlet.

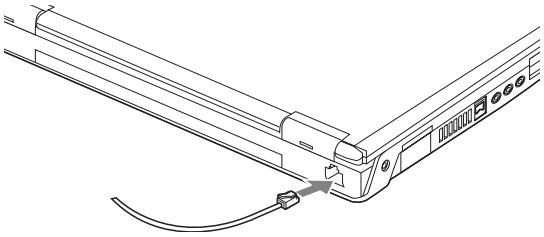

Figure 4-16. Connecting the LAN

PARALLEL PORT

The parallel port, or LPT port, located on the optional Port Replicator allows you to connect parallel devices, such as a printer to your notebook. In order to connect a parallel interface device follow these easy steps:

1. Align the connector with the port opening.
2. Push the connector into the port until it is seated.*(Figure 4-17)*
3. Tighten the two hold-down screws, located on each end of the connector.

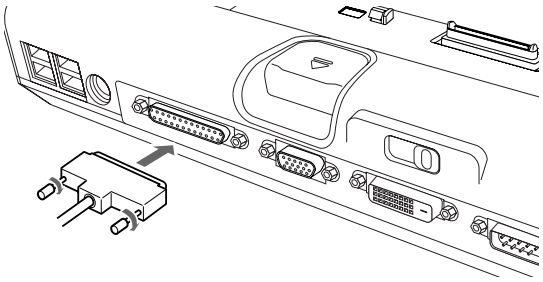

Figure 4-17. Connecting a Parallel Device to Port Replicator

SERIAL PORT

The serial port, or COM port, located on the optional Port Replicator allows you to connect serial devices, such as printers or scanners. In order to connect a serial interface device follow these easy steps:

1. Align the connector with the port opening.
2. Push the connector into the port until it is seated.
3. Tighten the two hold-down screws, located on each end of the connector.

PS/2 PORT

The PS/2 port located on the optional Port Replicator allow you to connect an external keyboard or mouse. In order to connect a PS/2 interface device follow these easy steps:

1. Align the connector with the port opening.*(Figure 4-18)*
2. Push the connector into the port until it is seated.

A mouse or keyboard may be installed and automatically recognized by your notebook without restarting or changing setups.

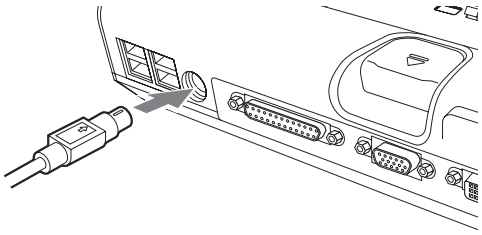

Figure 4-18. Connecting a PS/2 Device

DOCKING PORT

The docking port is used for the connection of your notebook to an optional port replicator or docking station. In order to connect your notebook to one of these devices follow the instructions that came with your docking port. *(See figure 2-7 on page 10 for location)*

UNIVERSAL SERIAL BUS PORTS

The Universal Serial Bus 2.0 ports (USB) allow you to connect USB devices such as external game pads, pointing devices, keyboards and/or speakers.

In order to connect a USB device follow these steps:

1. Align the connector with the port opening.*(Figure 4-19)*
2. Push the connector into the port until it is seated.

Due to the ongoing changes in USB technology and standards, not all USB devices and/or drivers are guaranteed to work.

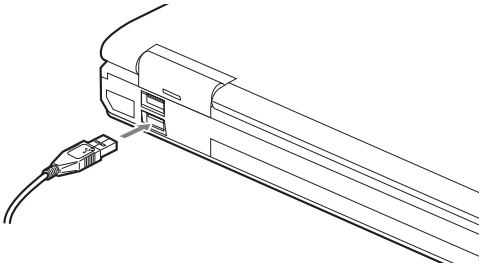

Figure 4-19. Connecting a USB Device

INFRARED PORT

The Infrared IrDA (4Mbps) port allows for wireless data transfer between your notebook and other IrDA-compatible devices, such as another computer or a printer, without the use of a cable. *(See figure 2-6 on page 9 for location)*

It is important to keep in mind that while carrying out this form of communication, both devices must be placed so their infrared ports are directly facing each other without obstruction. The devices must also be separated by at least 6" but no more than 36" for maximum performance.

The following conditions may interfere with infrared communications:

- A television, radio remote control unit, or a wireless headphone is being used nearby.
- Direct sunlight, fluorescent light, or incandescent light shines directly on the port.

- Do not move either device while communication is active as it may interrupt data transmission.
- Be careful not to scratch the infrared port lens. Dirt, scratches, or other surface marks can degrade operation.

STEREO LINE-IN JACK

The stereo line-in jack allows you to connect an external audio source to your notebook, such as an audio cassette player. Your audio device must be equipped with a 1/8" (3.5 mm) stereo mini-plug in order to fit into the stereo line-in jack of your notebook. In order to connect a external audio source follow these easy steps: *(See figure 2-6 on page 9 for location)*

1. Align the connector with the port opening.
2. Push the connector into the port until it is seated.

Turn down the audio volume when connecting electronic devices to the line-in jack. The internal speakers might break if unexpected large sounds are inputted.

The stereo line-in jack will not support an external microphone.

IEEE 1394 PORT

The 4-pin 1394 port allows you to connect digital devices that are compliant with IEEE 1394 standard. The IEEE 1394 standard is easy to use, connect, and disconnect. This port can allow up to 400 Mbps transfer rate. A third-party application may be required to operate your digital device with the 1394 port.

The 1394 port used in this system uses a four-pin configuration. If you intend to interface with devices which use a six-pin configuration, you will need to purchase an adapter.

In order to connect a 1394 device, follow these steps:

1. Align the connector with the port opening.
2. Push the connector into the port until it is seated.*(Figure 4-20)*

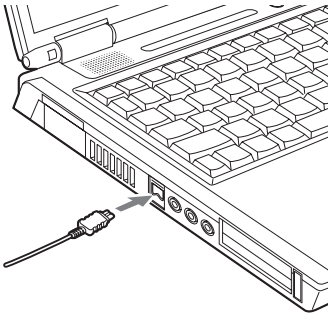

Figure 4-20. Connecting an IEEE 1394 Device

HEADPHONE JACK

The headphone jack allows you to connect headphones or powered external speakers to your notebook. Your headphones or speakers must be equipped with a 1/8” (3.5 mm) stereo mini-plug. In order to connect headphones or speakers follow these easy steps: *(See figure 2-5 on page 8 for location)*

1. Align the connector with the port opening.
2. Push the connector into the port until it is seated.

If you plug headphones into the headphone jack, the built-in stereo speakers will be disabled.

MICROPHONE JACK

The microphone jack allows you to connect an external mono microphone. Your microphone must be equipped with a 1/8”(3.5 mm) mono mini-plug in order to fit into the microphone jack of your notebook. In order to connect a microphone follow these easy steps: *(See figure on page 7 for location)*

1. Align the connector with the port opening.
2. Push the connector into the port until it is seated.

EXTERNAL MONITOR PORT

The external monitor port allows you to connect an external monitor. In order to connect an external monitor follow these easy steps: *(See figure 2-6 on page 9 for location)*

1. Align the connector with the port opening.
2. Push the connector into the port until it is seated.
3. Tighten the two hold-down screws, located on each end of the connector.

Pressing the [Fn] + [F10] keys allows you to change your selection of where to send your display video. Each time you press the key combination, you will step to the next choice, starting with the built-in display panel only, moving to the external monitor only, finally moving to both the built-in display panel and an external monitor.