APPENDIX H
USER MANUAL (PART 1)

This document must not be copied or reproduced, except in full without the written permission of the Manager, EMC Technologies Pty Ltd. The certificate on page 3 may be reproduced in full.
www.emctech.com.au

Copyright

Fujitsu Computer Systems Corporation has made every effort to ensure the accuracy and completeness of this document; however, as ongoing development efforts are continually improving the capabilities of our products, we cannot guarantee the accuracy of the contents of this document. We disclaim liability for errors, omissions, or future changes.

Fujitsu, the Fujitsu logo, and LifeBook are registered trademarks of Fujitsu Limited.

The following are registered trademarks of IBM Corporation: IBM, IBM PC AT, IBM PS/2.

The following are registered trademarks of Microsoft Corporation: MS, MS-DOS, Windows.

PCMCIA is a trademark of the Personal Computer Memory Card International Association.

Earthlink is a registered trademark of EarthLink Network, Inc.

Intel and Pentium are registered trademarks of Intel Corporation or its subsidiaries in the United States and other countries.

The Bluetooth trademark is owned by Bluetooth SIG, Inc., USA.

Adobe Acrobat Reader is a registered trademark of Adobe Systems, Inc.

Netscape 7.0 is a registered trademark of Netscape Communications Corporation.

PowerQuest and Drive Image are registered trademarks of PowerQuest Corporation.

Norton AntiVirus is a registered trademark of Symantec Corporation.

BayManager is a registered trademark of Softex, Inc.

The DVD player found in some models of the LifeBook notebook incorporates copyright protection technology that is protected by method claims of certain U.S. patents and other intellectual property rights owned by Macrovision Corporation and other rights users. Use of this copyright protection technology must be authorized by Macrovision Corporation, and is intended for home and other limited viewing uses only unless authorized by Macrovision Corporation. Reverse engineering or disassembly is prohibited.

Dolby Headphone manufactured under license from Dolby Laboratories. Dolby, Pro Logic, and the double-D symbol are trademarks of Dolby Laboratories. Copyrights 1992-1999 Dolby Laboratories. All rights reserved.

All other trademarks mentioned herein are the property of their respective owners.

Warning

Handling the cord on this product will expose you to lead, a chemical known to the State of California to cause birth defects or other reproductive harm.

Wash handsafter handing.

© Copyright 2004 Fujitsu Computer Systems Corporation. All rights reserved. No part of this publication may be copied, reproduced, or translated, without prior written consent of Fujitsu. No part of this publication may be stored or transmitted in any electronic form without the written consent of Fujitsu.

B6FH-1931-01EN-00 (DRAFT)

DECLARATION OF CONFORMITY

according to FCC Part 15

Responsible Party Name:	Fujitsu Computer Systems Corporation
Address:	1250 E. Arques Avenue, M/S 122 Sunnyvale, CA 94085
Telephone:	(408) 746-6000
Declares that product:	Base Model Configurations: LifeBook C1320 notebook LifeBook C1320D notebook Complies with Part 15 of the FCC Rules.

This device complies with Part 15 of the FCC rules. Operations are subject to the following two conditions: (1) This device must not be allowed to cause harmful interference, (2) This device must accept any interference received, including interference that may cause undesired operation.

E Series.book Page 2 Wednesday, April 14, 2004 10:28 AM

E Series.book Page 3 Wednesday, April 14, 2004 10:28 AM

Fujitsu LifeBook® E8000 Notebook
Table of Contents

1

PREFACE

Preface

About This Guide 1
Fujitsu Contact Information 1
Limited Warranty 1

2

GETTING TO KNOW YOUR LIFEBOOK

Overview

Unpacking 5

Locating the Controls and Connectors

Top and Front Components 6
Left-Side Panel Components 7
Right-Side Panel Components 8
Back Panel Components 9
Bottom Components 10

Status Indicator Panel

Power Indicator 11
AC Adapter Indicator 11
Battery Level Indicators 11
Battery Charging Indicators 12
DVD/CD-RW/CD-ROM Drive Access Indicator . 12
Hard Drive or Removable Media Drive Access Indicator 12
PC Card Access Indicators 12
NumLk Indicator 12
CapsLock Indicator 12
ScrLk Indicator 12
Security Indicator 12

Keyboard

Using the Keyboard 13
Numeric Keypad 13
Windows Keys 13
Cursor Keys 13
Function Keys 14

Touchpad Pointing Device

Clicking 15
Double-Clicking 15
Dragging 16
Touchpad Control Adjustment 16
Scrolling 16
Optional Quick Point Feature 16

Volume Control

Controlling the Volume 17

Flexible Bay Devices

Removing and Installing Modular Devices 18

LifeBook Security/Application Panel

Setting up Your LifeBook Security Panel 20
Passwords 20
Operating Your LifeBook Security/ Application Panel 21
Precautions 21
Uninstalling the Security Panel Application 21
Launching Applications with the Security/Application Panel 22

3

GETTING STARTED

Power Sources

Connecting the Power Adapters 27

Display Panel

Opening the Display Panel 28

E Series.book Page 4 Wednesday, April 14, 2004 10:28 AM

Adjusting Display Panel Brightness 28
Closing the Display Panel 28

Starting Your LifeBook Notebook

Power On 29
Boot Sequence 29
BIOS Setup Utility 29
Booting the System 30
Windows Product Activation 30
Registering Your LifeBook Notebook 31
Installing Click Me! 31

Power Management

Power/Suspend/Resume Button 32
Suspend Mode 32
Hibernation (Save-to-Disk) Feature 33
Display Timeout 33
Hard Disk Timeout 33
Windows Power Management 33
Restarting the System 33
Power Off 33

4

USER-INSTALLABLE FEATURES

Lithium ion Battery

Recharging the Batteries 37
Replacing the Battery 38

Optical Drive

Media Player Software 39
Loading Media on Your Drive 39
Removing Media 40
Using the Media Player Software 40
Using Dolby™ Headphone 41
Using Media Player on Battery Power 41

External USB Floppy Disk Drive

Loading a Disk 42
Ejecting a Disk 42
Preparing a Disk for Use 42

PC Cards

Installing PC Cards 43
Removing PC Cards 43
Smart Card Reader 44

Memory Upgrade Module

Installing Memory Upgrade Modules 45
To Remove a Memory Upgrade Module 45
Checking the Memory Capacity 46

Port Replicator

Back Panel Components 47
Front Panel Components 48
Attaching the Port Replicator 48
Locking the Port Replicator 49
Detaching the Port Replicator 49

Device Ports

Modem (RJ-11) Telephone Jack 50
Internal LAN (RJ-45) Jack 50
Parallel Port 50
Serial Port 51
PS/2 Port 51
Docking Port 51
Universal Serial Bus Ports 51
Infrared Port 51
Stereo Line-In Jack 52
IEEE 1394 Port 52
Headphone Jack 52
Microphone Jack 52
External Monitor Port 52

5

TROUBLESHOOTING

Troubleshooting Your System

Identifying the Problem 55
Specific Problems 55
Troubleshooting Table 56
Power On Self Test Messages 64
Emergency media Player Drive Tray Release . . . 65
Modem Result Codes 65
Restoring Your Pre-installed Software 66
Drive Image Special Edition (DISE) 66
Automatically Downloading Driver Updates . . . 67

E Series.book Page 5 Wednesday, April 14, 2004 10:28 AM

6

CARING FOR YOUR LIFEBOOK

Care and Maintenance

Batteries 72
Floppy Disks and Drives 72
Media Care 72
PC Cards 73

7

SYSTEM SPECIFICATIONS

Specifications

Configuration Label 77
Microprocessor 77
Chipset 77
Memory 77
Video 77
Audio 77
Mass Storage Device Options 77
Features 78
Device Ports 78
Keyboard 78
Power 78
Dimensions and Weight 79
Environmental Requirements 79
Popular Accessories 79
Pre-Installed Software 79
Learning About Your Software 79

8

GLOSSARY/REGULATORY

Glossary 83
Regulatory Information 89

APPENDIX: WIRELESS LAN USER'S GUIDE

Before Using the Wireless LAN

For better communications 97
Stopping transmission 98
Starting Transmission 98

Connection using Wireless Zero Configuration Tool

Flow of operations 99
Preparation for wireless LAN connection 99
Connection to the network 101

Connection using Atheros Client Utility

Flow of operations 104
Preparation for wireless LAN connection 104
Connection to the network 105

Other settings

Setting of power-saving function 108

Troubleshooting the WLAN

Troubleshooting 109

Wireless LAN Glossary

Glossary 112

IP address information

Additional Information 114

Specifications

Specification 115

Using the Bluetooth Device

What is Bluetooth 116
Where to Find Information About Bluetooth . . 116

INDEX

Index 117

1
Preface

E Series.book Page 2 Wednesday, April 14, 2004 10:28 AM

E Series.book Page 1 Wednesday, April 14, 2004 10:28 AM

Preface

ABOUT THIS GUIDE

The LifeBook E8000 notebook from Fujitsu is a powerful computer, powered by an Intel Pentium M microprocessor. Depending upon the configuration, the notebook has either a built-in 15" TFT XGA or SXGA+ color display. This system brings the computing power of desktop personal computers (PCs) to a portable environment.

This manual explains how to operate your LifeBook notebook's hardware and built-in system software. Your notebook is compatible with the IBM® PC AT.

Your computer comes with Microsoft Windows® XP Home, or XP Professional pre-installed.

Conventions Used in the Guide

Keyboard keys appear in brackets.
Example: [Fn], [F1], [ESC], [ENTER] and [CTRL].

Pages with additional information about a specific topic are cross-referenced within the text.
For example: (See page xx.)

On screen buttons or menu items appear in bold
Example: Click **OK** to restart your LifeBook notebook.

DOS commands you enter appear in Courier type.
Example: `Shutdown the computer?`

The information icon highlights information that will enhance your understanding of the subject material.

The caution icon highlights information that is important to the safe operation of your computer, or to the integrity of your files. Please read all caution information carefully.

The warning icon highlights information that can be hazardous to either you, your LifeBook notebook, or your files. Please read all warning information carefully.

FUJITSU CONTACT INFORMATION

Service and Support

You can contact Fujitsu Service and Support in the following ways:

- Toll free: 1-800-8Fujitsu (1-800-838-5487)
- E-mail: 8fujitsu@us.fujitsu.com
- Web site: us.fujitsu.com/computers

Before you place the call, you should have the following information ready so that the customer support representative can provide you with the fastest possible solution:

- Product name
- Product configuration number
- Product serial number
- Purchase date
- Conditions under which the problem occurred
- Any error messages that have occurred
- Type of device connected, if any

Fujitsu Online

You can go directly to the online Fujitsu Product catalog for your LifeBook notebook by clicking on the LifeBook Accessories Web site URL link located in the Service and Support Software folder of the Windows Start menu.

You can also reach Fujitsu Service and Support online by clicking on the Service and Support Web site URL link, located in the Service and Support Software folder of the Windows Start menu.

You must have an active internet connection to use the online URL links.

LIMITED WARRANTY

Your LifeBook notebook is backed by a Fujitsu International Limited Warranty. Check the service kit that came with your notebook for the Limited Warranty period and terms and conditions.

2

Getting to Know Your LifeBook Notebook

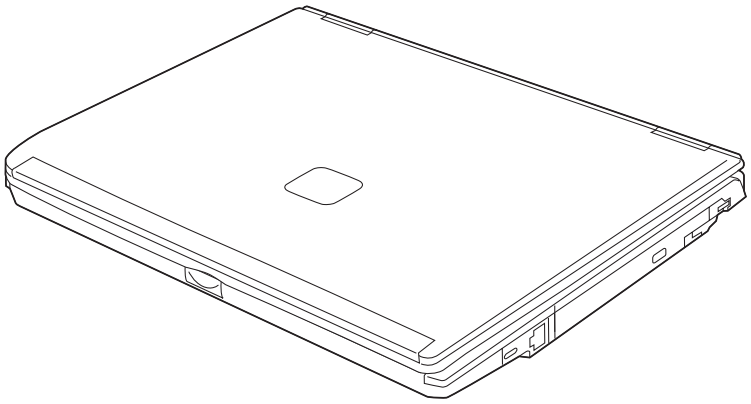

Figure 2-1. Fujitsu LifeBook E8000 notebook

Overview

This section describes the components of your Fujitsu LifeBook E8000 notebook. We strongly recommend that you read it before using your notebook – even if you are already familiar with notebook computers.

UNPACKING

When you receive your LifeBook notebook, unpack it carefully, and compare the parts you have received with the items listed below.

For a pre-configured model you should have:

- LifeBook E8000 notebook *(Figure 2-1)*
- AC adapter with AC power cord *(Figure 2-2)*
- Lithium ion Battery, pre-installed
- Weight Saver
- Phone/Modem (RJ-11) telephone cable
- Driver and Application Restore (DAR) Disc
- Getting Started Guide
- User's Guide (this document)
- International Limited Warranty Brochure
- Microsoft®-associated product materials

Depending on your system configuration, one of the following devices will be pre-installed in the Flexible Bay:

- Weight Saver
- Modular Super-Multi DVD Drive
- Modular DVD/CD-RW combo drive
- Modular CD-ROM drive

Depending on your system configuration, the following optional items may be included with your system:

- Modular 2nd bay battery
- External USB floppy disk drive

Depending on your configuration, you may receive the following application CDs:

- DVD Application CD
- CD-RW Application CD

Once you have checked and confirmed that your LifeBook system is complete, read through the following pages to learn about all of your notebook's components.

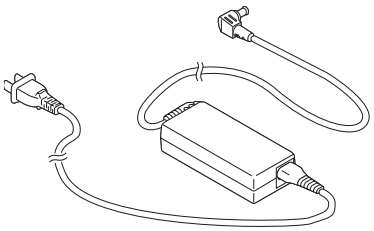

Figure 2-2 AC Adapter

E Series.book Page 6 Wednesday, April 14, 2004 10:28 AM

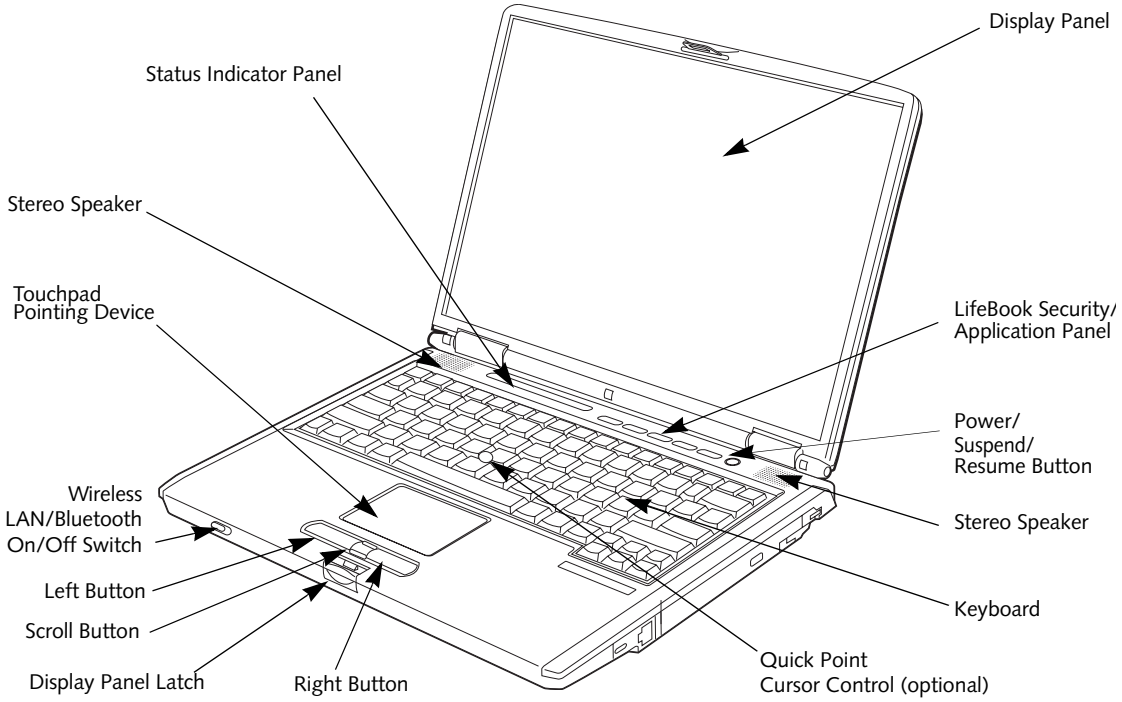

Figure 2-3. LifeBook notebook with display open

Locating the Controls and Connectors

TOP AND FRONT COMPONENTS

The following is a brief description of your LifeBook notebook's top and front components.

Display Panel

The display panel is a color LCD panel with back lighting for the display of text and graphics.

LifeBook Security/Application Panel

The LifeBook Security/Application Panel provides hardware security and one-touch application launch capability. *(See LifeBook Security/Application Panel on page 20 for more information)*

Power/Suspend/Resume Button

The Power/Suspend/Resume button allows you to suspend notebook activity without powering off, resume your LifeBook notebook from suspend mode, and power on your notebook when it has been shut down from Windows. *(See Power/Suspend/Resume Button on page 32 for more information)*

Stereo Speakers

The built-in dual speakers allow for stereo sound.

Keyboard

A full-size keyboard with dedicated Windows keys. *(See Keyboard on page 13 for more information)*

Touchpad Pointing Device

The Touchpad pointing device is a mouse-like cursor control with three buttons: two mouse-like buttons, and a scroll button. *(See Touchpad Pointing Device on page 15 for more information)*

Quick Point Cursor Control (optional)

The optional Quick Point control offers an additional method for moving the cursor. *(See Optional Quick Point Feature on page 16 for more information)*

Display Panel Latch

The display panel latch locks and releases the display panel.

Wireless LAN/Bluetooth On/Off Switch

The wireless LAN/Bluetooth on/off switch is used to power on and off the optional WLAN and/or Bluetooth device. Switching the device off when not in use will help to extend battery life.

Status Indicator Panel

The Status Indicator Panel displays symbols that correspond with a specific component of your LifeBook notebook. *(See Status Indicator Panel on page 11 for more information)*

E Series.book Page 7 Wednesday, April 14, 2004 10:28 AM

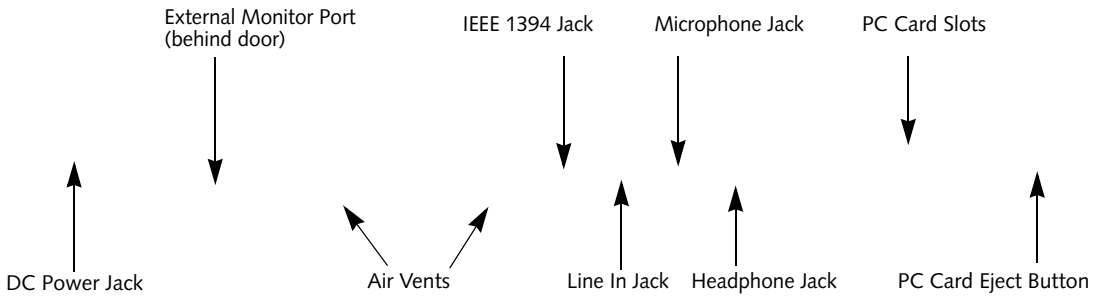

Figure 2-4. LifeBook notebook left-side panel

LEFT-SIDE PANEL COMPONENTS

The following is a brief description of your LifeBook notebook's left-side components.

External Monitor Port

The external monitor port allows you to connect an external monitor. *(See External Monitor Port on page 52 for more information)*

IEEE 1394 (4-pin) Jack

The 4-pin 1394 jack is used to connect between your LifeBook and an IEEE 1394 peripheral such as a digital video camera. *(See IEEE 1394 Port on page 52 for more information)*

Microphone Jack

The microphone jack allows you to connect an external mono microphone. *(See Microphone Jack on page 52 for more information)*

PC Card Slot

The PC Card Slots allow you to install two Type I or Type II PC Cards or one Type III PC Card. *(See PC Cards on page 43 for more information)*

Stereo Line-in Jack

The stereo line-in jack allows you to connect an external audio source. *(See Stereo Line-In Jack on page 52 for more information)*

Headphone Jack

The headphone jack allows you to connect headphones or powered external speakers. *(See Headphone Jack on page 52 for more information)*

DC Power Jack

The DC power jack allows you to plug in the AC adapter to power your LifeBook notebook and charge the internal Lithium ion battery.

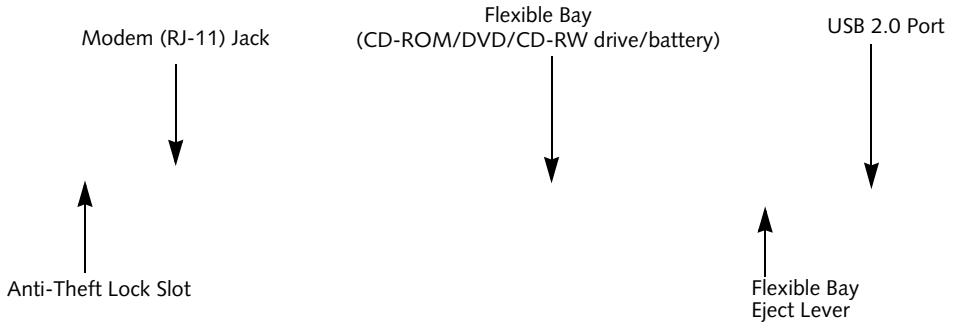

Figure 2-5. LifeBook notebook right-side panel

RIGHT-SIDE PANEL COMPONENTS

The following is a brief description of your LifeBook notebook's right-side components.

Modem (RJ-11) Telephone Jack

The Modem (RJ-11) telephone jack is for attaching a telephone line to the internal multinational 56K modem. *(See Modem (RJ-11) Telephone Jack on page 50 for more information)*

> The internal modem is not intended for use with Digital PBX systems. Do not connect the internal modem to a Digital PBX as it may cause serious damage to the internal modem or your entire notebook. Consult your PBX manufacturer's documentation for details. Some hotels have Digital PBX systems. Be sure to find out BEFORE you connect your modem.

> The internal multinational modem is designed to the ITU-T V.90 standard. Its maximum speed of 53000bps is the highest allowed by FCC, and its actual connection rate depends on the line conditions. The maximum speed is 33600 bps at upload.
>
> For additional information about the multinational modem, refer to the Fujitsu web site at: us.fujitsu.com/computers

Flexible Bay

The Flexible Bay can accommodate one of the following devices. *(See Flexible Bay Devices on page 18 for more information)*

- Modular USB Floppy Disk Drive
- Modular CD-ROM drive
- Modular DVD/CD-RW combo drive
- Modular Super-Multi DVD Drive
- Modular Lithium ion battery
- Weight Saver

Flexible Bay Eject Lever

The Flexible Bay eject lever releases the Flexible Bay device.

USB 2.0 Port

The USB 2.0 port allows you to connect Universal Serial Bus devices. USB 2.0 transfers data at up to 480Mbps and is backward-compatible with USB 1.1 devices, which transfer data at up to 12Mbps. *(See Universal Serial Bus Ports on page 51 for more information)*

Anti-theft Lock Slot

The anti-theft lock slot allows you to attach an optional physical lock down device.

E Series.book Page 9 Wednesday, April 14, 2004 10:28 AM

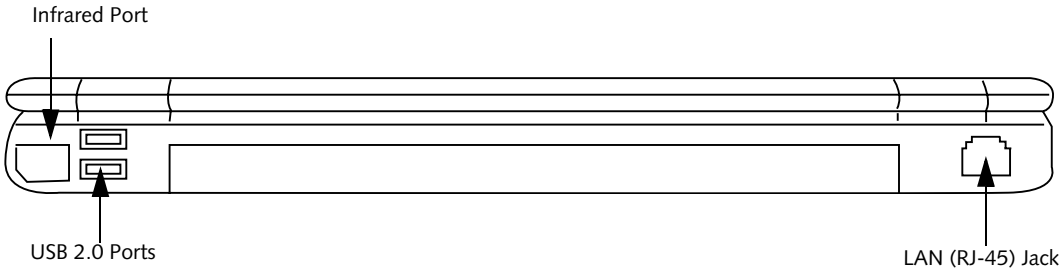

Figure 2-6. LifeBook notebook back panel

BACK PANEL COMPONENTS

Following is a brief description of your LifeBook notebook's back panel components.

Infrared Port

The fast IrDA compatible port allows you to communicate with another IrDA compatible infrared device without a cable. *(See Infrared Port on page 51 for more information)*

USB 2.0 Ports

The USB 2.0 ports allow you to connect Universal Serial Bus devices. USB 2.0 transfers data at up to 480Mbps and is backward-compatible with USB 1.1 devices, which transfer data at up to 12Mbps. *(See Universal Serial Bus Ports on page 51 for more information)*

LAN (RJ-45) Jack

The internal LAN (RJ-45) jack is used for an internal Gigabit (10Base-T/100Base-Tx/1000Base-T/Tx) Ethernet LAN connection. *(See Internal LAN (RJ-45) Jack on page 50 for more information)*

E Series.book Page 10 Wednesday, April 14, 2004 10:28 AM

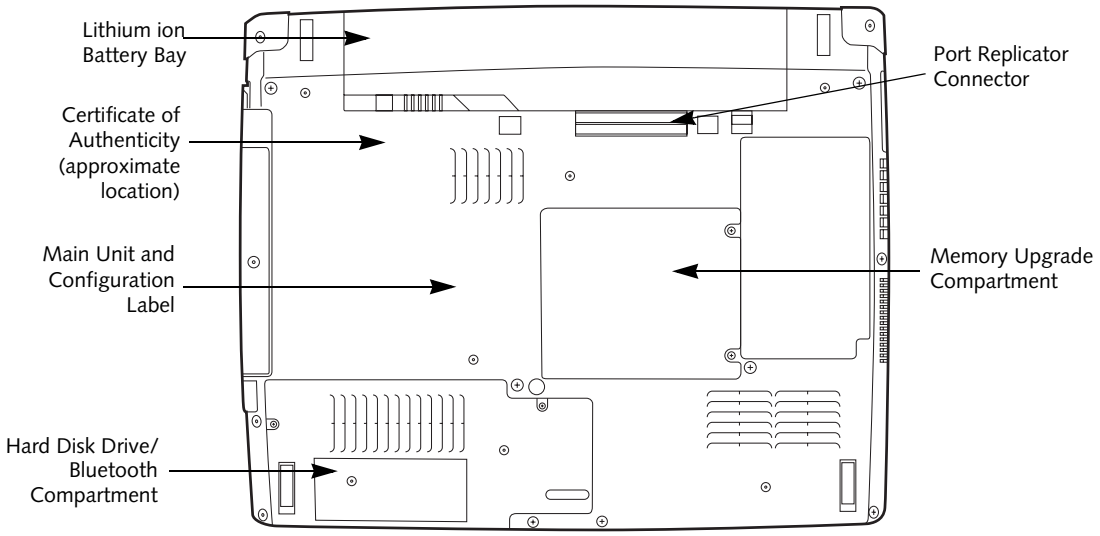

Figure 2-7. LifeBook notebook bottom panel

BOTTOM COMPONENTS

The following is a brief description of your LifeBook notebook's bottom panel components.

Port Replicator Connector

This connector allows you to connect the optional Port Replicator to your notebook.

Memory Upgrade Compartment

Your LifeBook notebook comes with high speed Double Data Rate Synchronous Dynamic RAM (DDR SDRAM). The memory upgrade compartment allows you to expand the system memory capacity of your LifeBook notebook, hence improving overall performance. *(See Memory Upgrade Module on page 45 for more information)*

Lithium ion Battery Bay

The battery bay contains the internal Lithium ion battery. It can be opened for the removal of the battery when stored over a long period of time or for swapping a discharged battery with a charged Lithium ion battery. *(See Lithium ion Battery on page 37 for more information)*

Main Unit and Configuration Label

The configuration label shows the model number and other information about your LifeBook notebook. In addition, the configuration portion of the label has the serial number and manufacturer information that you will need to give your support representative. It identifies the exact version of various components of your notebook.

Hard Disk Drive/Bluetooth Compartment

This compartment houses the system hard disk drive and the optional Bluetooth device. (Note that the optional wireless LAN device is located under the keyboard). Under normal circumstances, it should not be necessary to open this compartment.

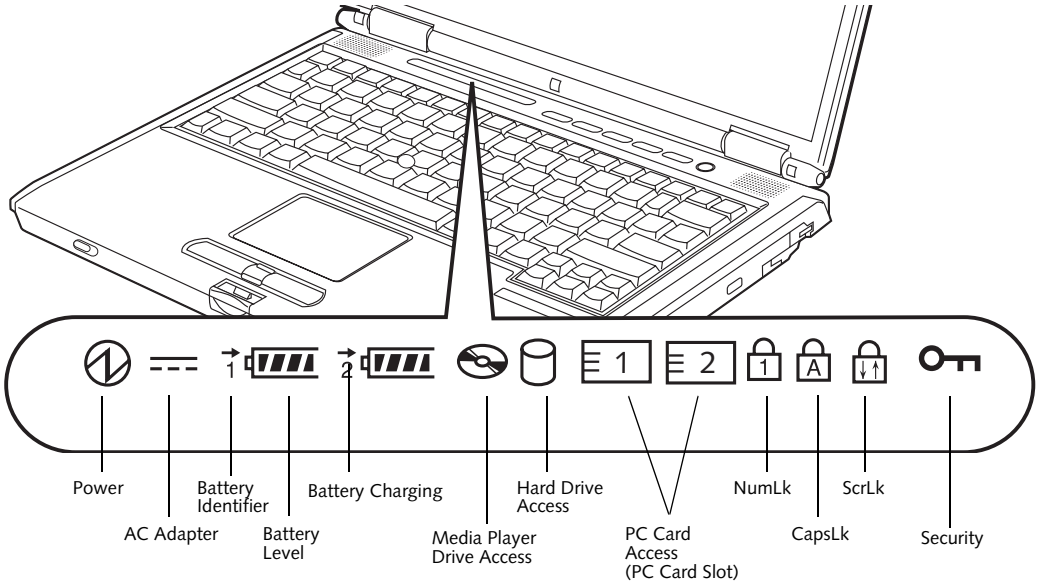

Figure 2-8. Status Indicator Panel

Status Indicator Panel

The Status Indicator displays symbols that correspond with a specific component of your Fujitsu LifeBook notebook. These symbols tell you how each of those components are operating. *(Figure 2-8)*

POWER INDICATOR

The Power indicator symbol states whether your system is operational. It has several different states, each of which tells you the mode your notebook is in.

- **Steady On:** This means that there is power to your LifeBook notebook and that it is ready for use.
- **Flashing:** This means that your LifeBook notebook is in Suspend mode.
- **Steady Off:** This means that your system is either in Save-to-Disk mode, or that your LifeBook notebook has been turned off.

If you are charging your battery, the Power indicator will remain on even if your notebook is shut off. The Power indicator will also remain on if you have either adapter connected and are shut down from Windows.

AC ADAPTER INDICATOR

The AC Adapter indicator states whether your notebook is operating from the AC adapter, the Auto/Airline adapter or the batteries. This icon has two different states that can tell you what power source your LifeBook notebook is using.

- On: This means that either of the adapters are currently in use.
- Off: Power is only coming from the batteries, and you do not have an adapter connected.

BATTERY LEVEL INDICATORS

The two Battery Level indicators state whether or not the primary Lithium ion battery and/or the optional second Lithium ion battery are installed (Battery 1 refers to the primary Lithium ion battery, while Battery 2 refers to the Flexible Bay optional second battery). In addition, this symbol states how much charge is available within each installed battery. The symbol will only be displayed for a battery that is currently installed in your LifeBook notebook. *(Figure 2-9)*

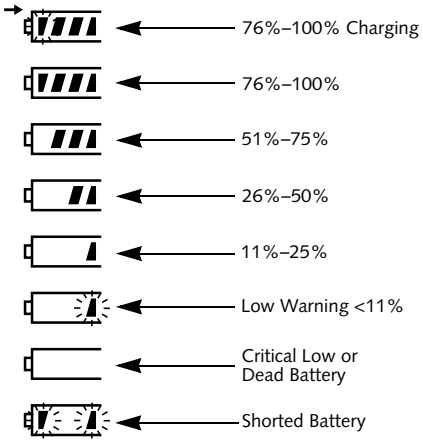

Figure 2-9 Battery Level Indicator

A shorted battery is damaged and must be replaced. *(Figure 2-9)*

BATTERY CHARGING INDICATORS

Located to the left of each of the Battery Level indicators is a small arrow symbol. This symbol states whether that specific battery is charging. This indicator will flash if the battery is too hot or cold to charge.

Batteries subjected to shocks, vibration or extreme temperatures can be permanently damaged.

DVD/CD-RW/CD-ROM DRIVE ACCESS INDICATOR

The DVD/CD-RW/CD-ROM Access indicator tells you that the DVD/CD-RW/CD-ROM drive is being accessed. If the Auto Insert Notification function is active, the indicator will flash periodically when your system is checking the DVD/CD-RW/CD-ROM drive. If the Auto Insert Notification function is not active, the indicator will only flash when you access the DVD/CD-RW/CD-ROM drive. The default setting is the Auto Insert Notification function active.

The DVD/CD-RW/CD-ROM Auto Insert Notification function will periodically check for a DVD/CD-RW/CD-ROM installed in the drive, causing the DVD/CD-RW/CD-ROM Access indicator to flash. The DVD/CD-RW/CD-ROM Auto Insert Notification function allows your system to automatically start a DVD/CD-RW/CD-ROM as soon as it is inserted in the drive and the tray is closed. It will begin playing an audio DVD/CD or will start an application if the DVD/CD has an auto-run file

HARD DRIVE OR REMOVABLE MEDIA DRIVE ACCESS INDICATOR

The Hard Drive Access indicator states whether your internal hard drive is being accessed.

The Hard Drive Access indicator does not show which hard drive is being accessed.

PC CARD ACCESS INDICATORS

The PC Card Access indicators display whether or not your notebook is accessing a PC Card. The indicator will flash if your software tries to access a PC Card even if there is no card installed. *(See PC Cards on page 43 for more information)*

NUMLK INDICATOR

The NumLk indicator states that the integral keyboard is set in ten-key numeric keypad mode.

CAPSLOCK INDICATOR

The CapsLock indicator states that your keyboard is set to type in all capital letters.

SCRLK INDICATOR

The ScrLk indicator states that your scroll lock is active.

SECURITY INDICATOR

The Security Indicator flashes (if a password was set) when the system resumes from Off or Standby modes. You must enter the password that was set in the Security Panel before your system will resume operation.

E Series.book Page 13 Wednesday, April 14, 2004 10:28 AM

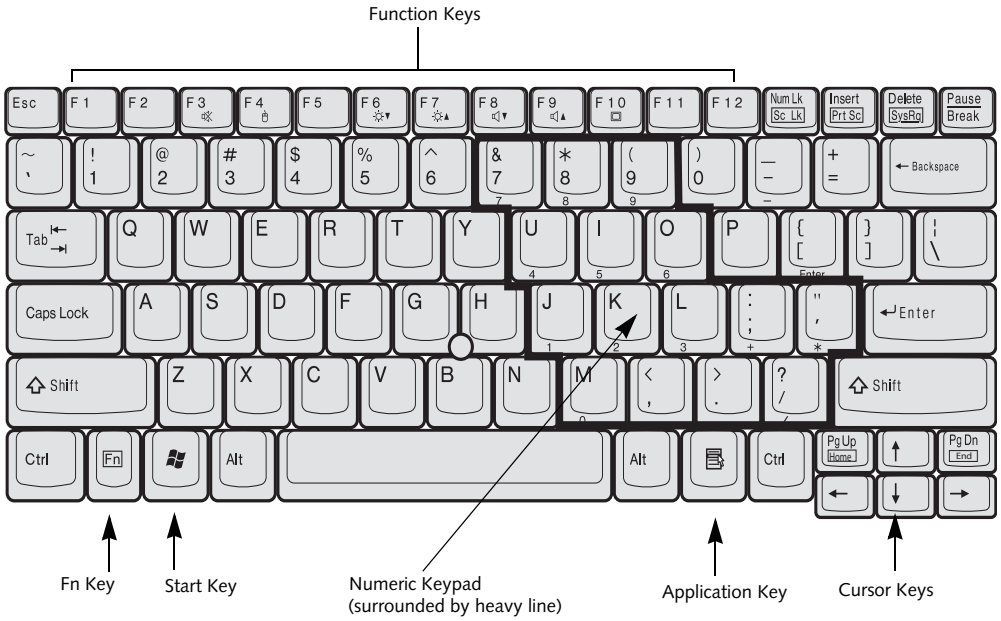

Figure 2-10 Keyboard

Keyboard

USING THE KEYBOARD

Your Fujitsu LifeBook notebook has an integral 84-key keyboard. The keys perform all the standard functions of a 101-key keyboard, including the Windows keys and other special function keys. This section describes the following keys. *(Figure 2-10)*

- Numeric keypad: Your notebook allows certain keys to serve dual purposes, both as standard characters and as numeric and mathematical keys. The ability to toggle between the standard character and numerical keys is controlled through the [NumLk] key.
- Cursor keys: Your keyboard contains four arrow keys for moving the cursor or insertion point to the right, left, up, or down within windows, applications and documents.
- Function keys: The keys labeled [F1] through [F12], are used in conjunction with the [Fn] key to produce special actions that vary depending on what program is running.
- Windows keys: These keys work with your Windows operating system and function the same as the onscreen Start menu button, or the right button on your pointing device.

NUMERIC KEYPAD

Certain keys on the keyboard perform dual functions as both standard character keys and numeric keypad keys. NumLk can be activated by pressing the [NumLk] keys. Turning off the NumLk feature is done the same way. Once this feature is activated you can enter numerals 0 through 9, perform addition (+), subtraction (-), multiplication (*), or division (/), and enter decimal points (.) using the keys designated as ten-key function keys. The keys in the numeric keypad are marked on the front edge of the key to indicate their secondary functions. *(Figure 2-10)*

WINDOWS KEYS

Your LifeBook notebook has two Windows keys, consisting of a Start key and an Application key. The Start key displays the Start menu. This button functions the same as your onscreen Start menu button. The Application key functions the same as your right mouse button and displays shortcut menus for the selected item. (Please refer to your Windows documentation for additional information regarding the Windows keys.) *(Figure 2-10)*

CURSOR KEYS

The cursor keys are the four arrow keys on the keyboard which allow you to move the cursor up, down, left and right in applications. In programs such as Windows Explorer, it moves the “focus” (selects the next item up, down, left, or right). *(Figure 2-10)*

FUNCTION KEYS

Your LifeBook notebook has 12 function keys, F1 through F12. The functions assigned to these keys differ for each application. You should refer to your software documentation to find out how these keys are used. *(Figure 2-10)*

The [Fn] key provides extended functions for the notebook and is always used in conjunction with another key.

- [Fn+F3]: Pressing [F3] while holding [Fn] will toggle the Audio Mute on and off.
- [Fn+F4]: Pressing [F4] while holding [Fn] will toggle the Quick Point feature on and off. Note that the [Fn+F4] combination only works if Manual Setting is selected in the BIOS. (See "BIOS Setup Utility" on page 29)
- [Fn+F6]: Pressing [F6] repeatedly while holding [Fn] will lower the brightness of your display.*
- [Fn+F7]: Pressing [F7] repeatedly while holding [Fn] will increase the brightness of the display.*
- [Fn+F8]: Pressing [F8] repeatedly while holding [Fn] will decrease the volume of your LifeBook notebook.**
- [Fn+F9]: Pressing [F9] repeatedly while holding [Fn] will increase the volume of your LifeBook notebook.**

* There are eight brightness levels.

** There are 26 audio levels.

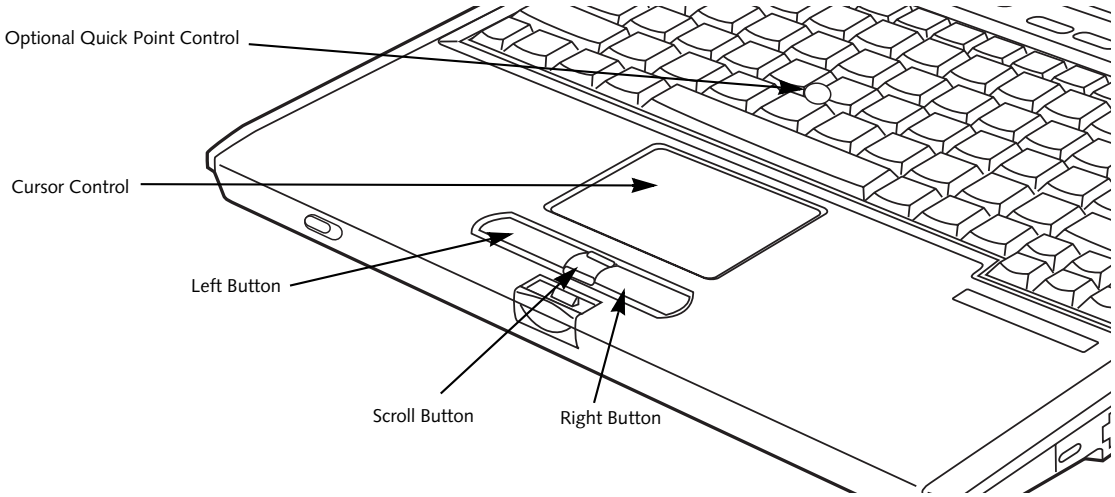

Figure 2-11. Touchpad pointing device

Touchpad Pointing Device

Certain E8000 LifeBook notebooks are equipped with an optional "Quick Point" button for moving the cursor. For more information about Quick Point, see "Optional Quick Point Feature" on page 16.

The Touchpad pointing device comes built into your Fujitsu LifeBook notebook. It is used to control the movement of the pointer to select items on your display panel. The Touchpad is composed of a cursor control, a left and right button, and a scrolling button. The cursor control works the same way a mouse does, and moves the cursor around the display. It only requires light pressure with the tip of your finger. The left and right buttons function the same as mouse buttons. The actual functionality of the buttons may vary depending on the application that is being used. The scrolling button allows you to navigate quickly through pages, without having to use the scroll bars. *(Figure 2-11)*

An external mouse can be connected to either the USB port on your LifeBook notebook or the USB or PS/2 ports on the optional port replicator, and used simultaneously with the Touchpad. However, if you boot the system with an external mouse connected the Touchpad will be disabled or enabled depending on the specifications in your BIOS settings. *(See BIOS Setup Utility on page 29 for more information)*

CLICKING

Clicking means pushing and releasing a button. To left-click, move the cursor to the item you wish to select, press the left button once, and then immediately release it. To right-click, move the mouse cursor to the item you wish to select, press the right button once, and then immediately release it. You also have the option to perform the clicking operation by tapping lightly on the Touchpad once. *(Figure 2-12)*

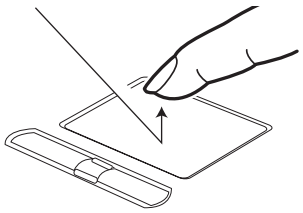

Figure 2-12 Clicking

DOUBLE-CLICKING

Double-clicking means pushing and releasing the left button twice in rapid succession. This procedure does not function with the right button. To double-click, move the cursor to the item you wish to select, press the left button twice, and then immediately release it. You also have the option to perform the double-click operation by tapping lightly on the Touchpad twice. *(Figure 2-13)*

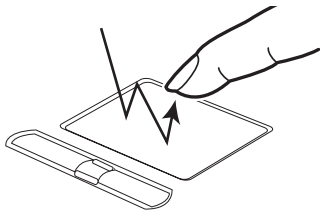

Figure 2-13 Double-clicking

- If the interval between clicks is too long, the double-click will not be executed.
- Parameters for the Touchpad can be adjusted from the Mouse Properties dialog box located in the Windows Control Panel.

DRAGGING

Dragging means pressing and holding the left button, while moving the cursor. To drag, move the cursor to the item you wish to move. Press and hold the left button while moving the item to its new location and then release it. Dragging can also be done using the Touchpad. First, tap the Touchpad twice over the item you wish to move making sure to leave your finger on the pad after the final tap. Next, move the object to its new location by moving your finger across the Touchpad, and then release your finger. *(Figure 2-14)*

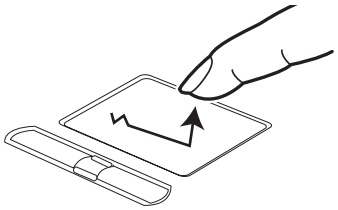

Figure 2-14 Dragging

TOUCHPAD CONTROL ADJUSTMENT

The Windows Control Panel allows you to customize your Touchpad with selections made from within the Mouse Properties dialog box.

SCROLLING

Using the Scrolling button allows you to navigate through a document quickly without using the window's scroll bars. This is particularly useful when you are navigating through on-line pages. To use the Scrolling button, press the crescent shape at the top or bottom of the button to scroll up or down a page. When you have reached the desired section of the page, release the button. *(Figure 2-15)*

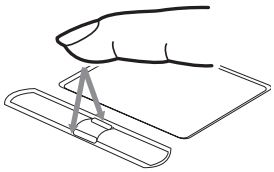

Figure 2-15 Scrolling

OPTIONAL QUICK POINT FEATURE

The optional Quick Point device consists of a cursor control button at the lower center of the keyboard. It is roughly the same size and shape as a pencil eraser. The cursor control works the same way a mouse ball does, and moves the cursor around the display. It only requires light pressure to move; the more pressure you use, the faster the cursor will move.

When used with the Quick Point button, the middle Touchpad button allows you to scroll up and down a screen.

Volume Control

Your Fujitsu LifeBook notebook has multiple volume controls which interact with each other.

Any software that contains audio files will also contain a volume control of its own. If you install an external audio device that has an independent volume control, the hardware volume control and the software volume control will interact with each other. It should be noted that if you set your software volume to Off, you will override the external volume control setting.

CONTROLLING THE VOLUME

The volume can be controlled in several different ways:

- Volume can be set from within the Volume Control on the Taskbar.
- Volume can be controlled with the F8 and F9 functions keys. Pressing [F8] repeatedly while holding [Fn] will decrease the volume of your notebook. Pressing [F9] repeatedly while holding [Fn] will increase the volume of your notebook.

There are 26 levels through which the function keys cycle.

- Volume can be controlled by many volume controls that are set within individual applications.
- Certain external audio devices you might connect to your system may have hardware volume controls.

Each source discussed above puts an upper limit on the volume level that must then be followed by the other sources.

We recommend that you experiment with the various volume controls to discover the optimal sound level.

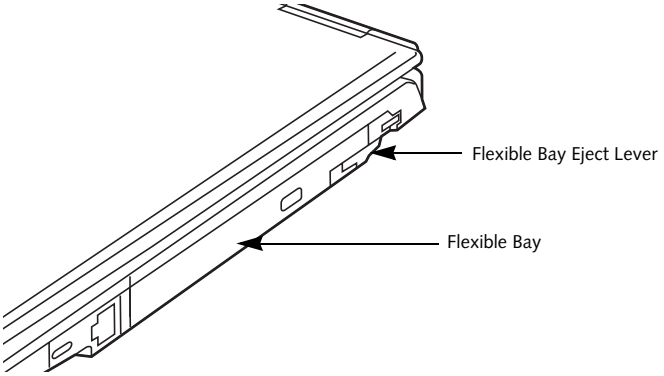

Figure 2-16 Flexible Bay

Flexible Bay Devices

Your Fujitsu LifeBook notebook contains a Flexible Bay. The Flexible Bay can house an optical drive, a Lithium ion battery, and a weight saver. *(Figure 2-16)*

Your Flexible Bay will have one of the following devices installed.

- Modular Super-Multi DVD drive: This allows you to access movies, software, and audio DVD/CDs and record to DVD, CD, and DVD-RAM discs.
- Modular DVD/CD-RW combo drive: This allows you to access movies, software, and audio DVD/CDs as well as to write to CDs.
- Modular CD-ROM drive: This allows you to access software, data, or audio CDs.
- Modular Lithium ion battery: This is a rechargeable battery that can be used to power your LifeBook notebook when an adapter is not connected.
- Weight Saver: This is used to fill the bay when no device is needed.

REMOVING AND INSTALLING MODULAR DEVICES

There are two ways to remove and install modular devices in the Flexible Bay:

- Cold-swapping: swapping devices while your LifeBook notebook is powered off.
- Hot-swapping: swapping devices while your system is active using the Unplug/Eject icon from your taskbar. Note that if the weight saver is installed rather than a modular device, it is not necessary to use BayManager when removing it.

You should never leave your Flexible Bay empty when the notebook is in operation. If left empty, dust or foreign matter may accumulate inside the notebook.

Cold-swapping

To cold-swap modular devices in your Flexible Bay follow these easy steps: *(Figure 2-17)*

1. Close any open files.
2. Shut down your LifeBook notebook.
3. Pull out the Flexible Bay eject lever. This will push your device out slightly, allowing you to remove the device.
4. Slide your device out until it is clear of the bay. This will require light force.

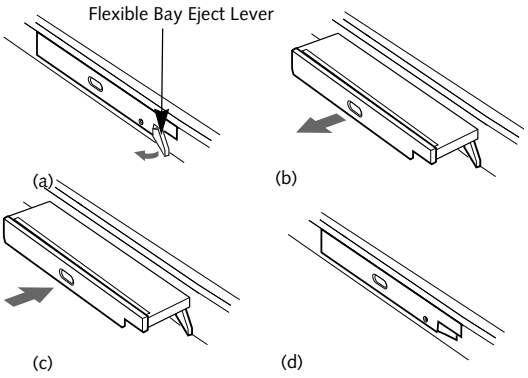

Figure 2-17 Removing/Installing a device in the Flexible Bay

Be careful when aligning and seating devices in the bay. If the fit is incorrect, you may damage the bay or the device. If the device does not move easily in the bay, remove it, and check for dirt or foreign objects. It will require a firm push to latch the device in place.

5. Slide the device you are installing into your notebook until it clicks into place.
6. It is now safe to turn your notebook back on.
7. You can now access and use the device.

Your LifeBook notebook will automatically detect the new device and activate it within your system. The drive letters associated with the device will be created and listed under My Computer and Windows Explorer.

Hot-swapping

Under Windows XP, hot-swapping is provided through the Unplug or Eject Hardware utility.

The icon for the utility appears on the taskbar. Click on the icon and follow the on-screen instructions.

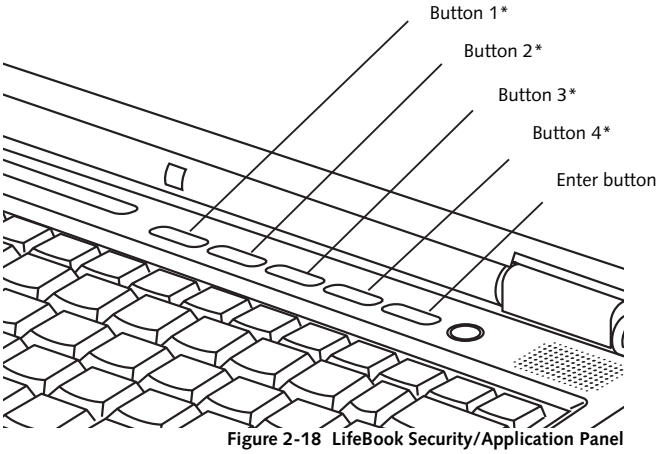

* Security/Application Launcher buttons (for entering passwords and launching applications)

Figure 2-18 LifeBook Security/Application Panel

LifeBook Security/ Application Panel

A unique feature of your LifeBook notebook is the Security/Application Panel that allows you to secure your notebook from unauthorized use. The Security/Application Panel also allows you to launch applications with the touch of a button when your system is on.

If the security system is activated, upon starting your notebook or resuming from suspend mode the security system requires you to enter a password code using the buttons on the Security/Application Panel. After entering a correct password, your notebook resumes system operation. *(Figure 2-18)*

SETTING UP YOUR LIFEBOOK SECURITY PANEL

When you receive your LifeBook notebook, the security panel application is pre-installed without any passwords. The following sections provide detailed information on your security panel, and how to set, change or remove passwords.

Numbered Buttons

Use these buttons to enter your password.*(Figure 2-18)*

Enter Button

After entering the button strokes, push this button to enter the password into the LifeBook notebook. *(Figure 2-18)*

PASSWORDS

The user and supervisor password may be set on this notebook. A supervisor password is typically the same for all LifeBook notebooks in a working group, office, or company to allow for system management. Individual LifeBook notebooks in a group environment should not use a common password. A password consists of one to five button strokes plus the enter button. A valid stroke consists of pushing one or up to four buttons simultaneously. The following are valid button strokes:

- Pushing [4] by itself
- Pushing [2] and [3] at the same time
- Pushing [1], [2], and [4] at the same time
- Pushing [1], [2], [3], and [4] at the same time

The following are valid passwords. The numbers within braces ({ }) are button strokes using more than one button.

- {[2]+[3]}, [1], [enter]
- [4], [enter]
- {[1]+[3]}, {[2]+[3]+[4]}, [1], [4], [2], [enter]

Setting Passwords

When shipped from the factory, no passwords are set. You have a choice of having no password or setting a supervisor and user password. You must set the supervisor password before the user password.

- The purpose of supervisor password is to be able to bypass the user password in case the user password is forgotten. The supervisor password alone will not lock the system.
- You have to set both the supervisor and user passwords for the security panel to work.

Setting Supervisor Password

You must have set a supervisor password before setting any user passwords. The supervisor password can bypass the user password.

1. Go to the **Start** menu.
2. Click on **Run**.

3. Type in:
   `C:\Program Files\Fujitsu\Security Panel Application\Supervisor\FJSECS.EXE`,
   then press [Enter]
4. Follow the on-screen instructions to set the Supervisor password.

Setting User Password

1 Go to the **Start** menu.
2. Click on **Programs**.
3. Click on **Security Panel Application** and **Set User Password**.
4. Follow the on-screen instructions to set the user password.

> You may change or remove the supervisor or user password by repeating the steps defined above.

OPERATING YOUR LIFEBOOK SECURITY/ APPLICATION PANEL

The security lock feature is in effect both when the system resumes from Off or suspend state. You always need to push the Suspend /Resume button to input the user password. Your system will not begin the boot sequence without entering your supervisor/user password.

From Off State

1. Turn on your system.
2. When the Security Indicator flashes, enter the password and press Enter button.

   For example, if the password is 22222,
   Press Button Number 2 five times and press Enter button.

   The LifeBook notebook will boot to normal operation.

From Suspend State

1. Press your Power/Suspend/Resume button.
2. When the Security Indicator flashes, enter the password and press Enter button.

   The notebook should resume normal operation.

Incorrect Password Entry

If an invalid supervisor or user password is entered three times in succession, the system will “beep” for about one minute. If a valid password is entered within a minute (while system beeps), the beeping will stop and the notebook will resume normal operation. If no password (or an invalid one) is entered while the system beeps, the system will return to its previous locked state (suspend or off) and the Security Indicator will go off. To reactivate the notebook after a password failure, you must press the Power/Suspend/Resume button, then enter a correct password.

> Remember the user password you specified on the Security Panel Application. If you forget the password you will not be able to use your computer. The super-visor password can override the user password.

PRECAUTIONS

Opening and Closing the Cover

Closing the cover automatically places the notebook into suspend mode. Opening the cover does not automatically place the notebook into normal operation. Instead, you must enter the proper security password after pushing the Power/Suspend/Resume button.

Low Battery Operations

If your LifeBook notebook has low battery, pushing the Power/Suspend/Resume button only turns on the Security Indicator. Your notebook does not unlock, the Security Indicator turns off after one minute. To resume normal operation, first attach a power supply to the notebook. Then you may unlock the notebook.

UNINSTALLING THE SECURITY PANEL APPLICATION

You have two options when uninstalling the security panel application:

- Uninstall the security panel application software. This will disable all security feature.
- Uninstall the security panel application with password still active. This will not allow any changes to the password.

Uninstalling the Security Panel Application Software

Remove passwords when User wants no password protection whatsoever and doesn’t want to give anybody the utility to set a password on their computer. In this case, if passwords (supervisor, user, or both) are set, the passwords must first be cleared BEFORE removing the application. To clear passwords, follow same procedure in SETTING PASSWORD CODES except this time, select REMOVE, enter current password then click **Next**. When asked to confirm select **Yes**.

Removing Security Panel Application with Passwords Still Active

Using this feature will not allow any changes to the password.

> Removing the applications does not remove the password. It simply removes the utility to change/add/remove passwords. To change your password you must reinstall the application.

User:

1. Go to **Start** Menu, Click on **Control Panel**.
2. Open **Add/Remove Programs Properties** in the Control Panel.
3. Select the **Security Panel Application** in the list, and click **Add/Remove**.
4. When the Confirm File Deletion box appears, click **Yes**.

Supervisor:

1. Go to **Start** Menu, Click on **Control Panel**.
2. Open **Add/Remove Programs Properties** in the Control Panel.
3. Select the **Security Panel Application for Supervisor** in the list, and click **Add/Remove**.
4. When the Confirm File Deletion box appears, click **Yes**.

Reinstalling the Security/Application Panel

To reinstall supervisor or user security application, you will need your Drivers and Applications CD. The **Utilities/Security Application Panel** folder contains two separate folders: **Supervisor** and **User**. The setup files for supervisor and user security applications are contained in those folders.

1. Go to the **Utilities/Security Application Pane/ Supervisor** folder on the CD and double-click the **setups.exe** file. The Installing Security Panel Application window will appear. Follow the instructions on the screen.
2. Go to the **Utilities/Security Application Panel/User** folder on the CD and double-click the **setup.exe** file. The Installing Security Panel Application window will appear. Follow the instructions on the screen.

Supervisor and user passwords can be set via Windows software using the FJSECS.exe and FJSECU.exe files, respectively. FJSECU.exe for the user password cannot run without first setting a supervisor password. You need to run FJSECS.exe first to set the supervisor password. Follow instructions under Setting Passwords on page 20.

If you forget both passwords, please contact Fujitsu Computer Systems Corporation Service and Support at 1-800-8FUJITSU (1-800-838-5487). Fujitsu Computer Systems Corporation charges a service fee for unlocking a password restricted LifeBook notebook. When calling please have a valid credit card and provide proof of ownership. You will then be given instructions on where to ship your notebook.

LAUNCHING APPLICATIONS WITH THE SECURITY/APPLICATION PANEL

The security panel also enables you to launch applications with the touch of a button when your system is on. Pressing any of the buttons will launch a user-defined application. Your notebook is pre-installed with software utilities that let you operate and configure your LifeBook Security /Application Panel. These utilities are found in the Start menu, under Settings -> Control Panel -> Application Panel. (For Windows XP users, go to Start -> Control Panel -> Other Control Panel Settings -> Application Panel. They include two Application Panel Setup tabs, E-mail Setup, and Internet Setup.

Configuring your LifeBook Application Panel

When you start Windows, the LifeBook Application Panel is automatically activated. An icon resembling a finger pressing a button will appear on the system tray (the indented portion of the status bar where the clock is displayed). When you see this icon you will know that LifeBook Application Panel is active.

As an application launcher, the LifeBook Application Panel is very flexible, giving you a variety of options. To set up the Panel to best suit your needs, we have provided the Application Panel Setup utility that quickly and easily helps you make the most of this valuable feature.

To configure your LifeBook Application Panel with Application Panel Setup:

1. Click on **Start**.
2. Click on **Programs**.
3. Click on **LifeBook Application Panel**.
4. Click on **Application Panel Setup**.

The Application Panel Setup utility will appear. There are tabs that correspond to the application buttons on the LifeBook Application Panel. When you receive your notebook, these buttons are pre-configured to launch specific programs, as referenced in Chapter 7 of this document.

> The tabs in Application Panel Setup may not be in the same order as the buttons on your LifeBook notebook, please select the tab you wish to change carefully.

To change an application associated with the Application buttons, click on the tab for the button you would like to reconfigure – for example, Application A. Click on Browse from Start Menu, scroll down the list of applications, click on the application you wish to launch with this button, and then click OK. The button will now launch the new application.

The Internet tab is different. It comes set to launch your Windows default Internet browser (Internet Explorer), unless you have changed this in Windows. In order to reconfigure it to launch another program follow these easy steps:

1. Click on **Other** from the Internet browser box.
2. Click on **Browse** from Start Menu.
3. Scroll down the list of applications, and then click on the application you wish to launch with this button.
4. Click **OK**.

The button will now launch the new application. If you want to return to launching your Windows default Internet browser with this button, you need only click on "Default Internet Browser" from the Internet browser box. Be aware that you will erase the settings for the "other application". If you wish to go back to launching the "other application" from this button, you will need to reconfigure it as described above.

If your system has dedicated one of the application launcher buttons to be an Internet launcher, the button can still be configured to launch any application you wish, not just an Internet browser.

When you have finished with Application Panel Setup click OK, and the new settings will take effect. You can reconfigure your LifeBook Application Panel as often as you like.

Deactivating and Activating the LifeBook Application Panel

To deactivate the LifeBook Application Panel, follow these easy steps:

1. Click on **Start**.
2. Click on **Programs**.
3. Click on **LifeBook Application Panel**.
4. Click on **Deactivate Panel**.

To reactivate, follow the same procedure, except for step 4. Click on **Activate Panel** instead.

Every time you start Windows the LifeBook Application Panel is activated, even if you deactivated it before you shut down.

3

Getting Started

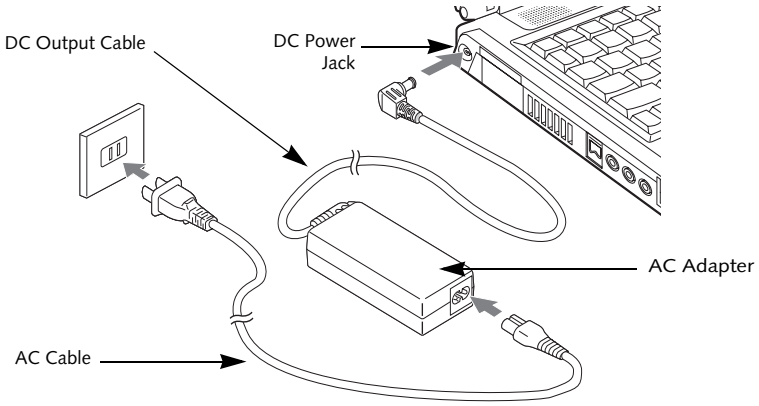

Figure 3-1 Connecting the AC Adapter

Power Sources

Your Fujitsu LifeBook notebook has three possible power sources: a primary Lithium ion battery, an AC adapter or an optional Auto/Airline adapter.

CONNECTING THE POWER ADAPTERS

The AC adapter or optional Auto/Airline adapter provides power for operating your notebook and charging the batteries.

Connecting the AC Adapter

1. Plug the DC output cable into the DC power jack of your LifeBook notebook.
2. Plug the AC adapter into an AC electrical outlet. *(Figure 3-1)*

Connecting the Optional Auto/Airline Adapter

1. Plug the DC output cable into the DC power jack on your notebook.
2. Plug the Auto/Airline adapter into the cigarette lighter of an automobile with the ignition key in the On or Accessories position.

   OR
3. Plug the Auto/Airline adapter into the DC power jack on an airplane seat.

Switching from AC Adapter Power or the Auto/Airline Adapter to Battery Power

1. Be sure that you have at least one charged battery installed.
2. Remove the AC adapter or the Auto/Airline adapter.

The Lithium ion battery is not charged upon purchase. Initially, you will need to connect either the AC adapter or the Auto/Airline adapter to use your notebook.

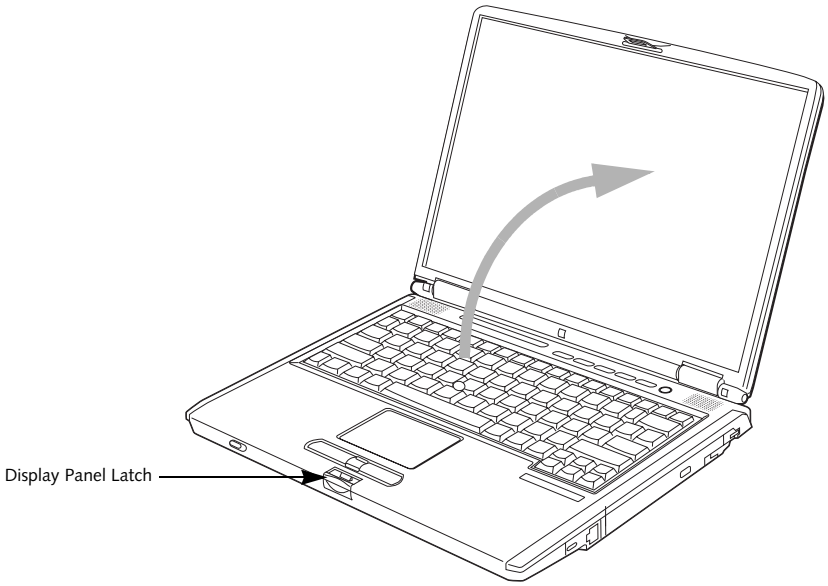

Figure 3-2 Opening the Display Panel

Display Panel

Your Fujitsu LifeBook notebook contains a display panel that is backlit for easier viewing in bright environments and maintains top resolution through the use of active-matrix technology.

OPENING THE DISPLAY PANEL

1. Press the Display Panel latch. This releases the locking mechanism and raises the display slightly.
2. Lift the display backwards, being careful not to touch the screen, until it is at a comfortable viewing angle. *(Figure 3-2)*

ADJUSTING DISPLAY PANEL BRIGHTNESS

Once you have turned on your LifeBook notebook, you may want to adjust the brightness level of the screen to a more comfortable viewing level. There are two ways to adjust the brightness, by using the keyboard or the power management utility.

Using the Keyboard

Adjusting the brightness using the keyboard changes the setting only temporarily.

- [Fn+F6]: Pressing repeatedly will lower the brightness of your display.
- [Fn+F7]: Pressing repeatedly will increase the brightness of the display.

- When using AC power your brightness setting is set to its highest level by default. When using battery power your brightness setting is set to approximately mid-level by default.
- The higher the brightness level, the more power the notebook will consume and the faster your batteries will discharge. For maximum battery life, make sure that the brightness is set as low as possible.

CLOSING THE DISPLAY PANEL

1. Holding the edge of your display panel, pull it forward until it is flush with the body of your LifeBook notebook.
2. Push down until you hear a click. This will engage the locking mechanism and prevent your display panel from opening unexpectedly.

Starting Your LifeBook Notebook

POWER ON

Power/Suspend/Resume Button

The Power/Suspend/Resume button is used to turn on your LifeBook notebook from its off state. Once you have connected your AC adapter or charged the internal Lithium ion battery, you can power on your LifeBook notebook. *(See figure 2-3 on page 6 for location)*

When you turn on your LifeBook notebook be sure you have a power source. This means that at least one battery is installed and charged, or that the AC or Auto/Airline adapter is connected and has power.

To turn on your LifeBook notebook from its off state, press the Power/Suspend/Resume button, located above the keyboard. When you are done working you can either leave your LifeBook notebook in Suspend mode, *(See Suspend Mode on page 32 for more information)*, or you can turn it off *(See Power Off on page 33 for more information)*.

Do not carry your LifeBook notebook around with the power on or subject it to shocks or vibration, as you risk damaging your notebook.

When you power on your LifeBook, it will perform a Power On Self Test (POST) to check the internal parts and configuration for correct functionality. If a fault is found, your LifeBook notebook will emit an audio warning and/or an error message will be displayed. *(See Power On Self Test Messages on page 64 for more information)*
Depending on the nature of the problem, you may be able to continue by starting the operating system or by entering the BIOS setup utility and revising the settings.

After satisfactory completion of the Power On Self Test (POST), your notebook will load your operating system.

Never turn off your LifeBook notebook during the Power On Self Test (POST) or it will cause an error message to be displayed when you turn your LifeBook notebook on the next time. *(See Power On Self Test Messages on page 64 for more information)*

BOOT SEQUENCE

The procedure for starting up your notebook is called the Bootup sequence and involves your notebook's BIOS. When your LifeBook notebook is first turned on, the main system memory is empty, and it needs to find instructions to start up your notebook. This information is in the BIOS program. Each time you power up or restart your notebook, it goes through a boot sequence which displays a Fujitsu logo until your operating system is loaded. During booting, your notebook is performing a standard boot sequence including a Power On Self Test (POST). If the sequence is completed without a failure and without a request for the BIOS Setup Utility, the system displays the operating system's opening screen.

The boot sequence is executed when:

- You turn on the power to your LifeBook notebook.
- You restart your notebook from the Windows Shut Down dialog box.
- The software initiates a system restart. Example: When you install a new application.
- You reset the system by pressing [CTRL+ALT+DEL].

BIOS SETUP UTILITY

The BIOS Setup Utility is a program that sets up the operating environment for your LifeBook notebook. Your BIOS is set at the factory for normal operating conditions, therefore there is no need to set or change the BIOS' environment to operate your notebook.

The BIOS Setup Utility configures:

- Device control feature parameters, such as changing I/O addresses and boot devices.
- System Data Security feature parameters, such as passwords.

Entering the BIOS Setup Utility

To enter the BIOS Setup Utility do the following:

1. Turn on or restart your LifeBook notebook.
2. Press the [F2] key once the Fujitsu logo appears on the screen. This will open the main menu of the BIOS Setup Utility with the current settings displayed.
3. Press the [RIGHT ARROW] or [LEFT ARROW] key to scroll through the other setup menus to review or alter the current settings.

BIOS Guide

A guide to your notebook's BIOS is available online. Please visit our service and support Web site at **us.fujitsu.com/computers**. Once there, select Support, then select Notebooks under User's Guides. Select LifeBook BIOS Guides from the pull-down menu for your LifeBook series. If you are unsure of your notebook's BIOS number, refer to your packing slip.

If your data security settings require it, you may be asked for a password before the BIOS main menu will appear.

BOOTING THE SYSTEM

We strongly recommend that you do not attach any external devices and do not put a DVD/CD in any drive until you have gone through the initial power on sequence.

When you turn on your LifeBook notebook for the first time, it will display a Fujitsu logo on the screen. If you do nothing the system will load the operating system, and then the Windows Welcome will begin.

Designed to accommodate the needs of users in many different countries, Windows needs to be configured the first time you use it. Windows has three parts:

- Getting Started: You have the opportunity to enter custom information for your configuration file and setup your modem so that your LifeBook notebook will be prepared to dial out.
- Registration: Easy online registration for Windows with Microsoft, and for your LifeBook notebook with Fujitsu.
- Windows License Agreement and Final Settings: You have the opportunity to review the Windows.

Getting Started

Read the instructions on the screens carefully and fill in the information as directed. You will be asked for such items as the language you wish to use, the country in which you live, your first and last name, and about how you dial out from where you will be using your notebook. For the modem settings, enter your current location information where you will be using your LifeBook notebook. If you are not connected to a phone line and plan to register at a later time, you may click the **Skip** button, and you will go directly to the condition of use page.

Make sure you have connected a phone line to your modem before you use E-Registration.

Once you have set up your notebook to dial out, Windows will make a free telephone call which will test these settings. If the call is unsuccessful, you will be returned to the phone settings page where you may try to fix them. If you are unable to fix the settings please contact Fujitsu Service and Support. *(See Fujitsu Contact Information on page 1 for more information)* If you would simply like to move on, and register at a later time, you may click the **Skip** button, and you will go directly to the Condition of Use page.

Registration

If your connection is successful, you will go to the Registration Confirmation page. On this page simply enter the requested information, and then check the box at the bottom to register your copy of Windows with Microsoft. Once you have finished, click the **Next** button to continue.

If you do not register at this time you can do it later simply by double-clicking on the **LifeBook Registration** icon on your desktop and following the instructions.

You will then go through the Fujitsu registration process. Follow the instructions on the screens, and enter all of the necessary information. Be as specific as possible so that if you need help the service and support team will be able to serve you better.

Final Settings

The first part of your final settings is the Windows End User License Agreement. Read the agreement carefully. When you finish reading you must accept or reject the terms of the agreement and then click on the **Next** button.

If you reject the terms of the license agreement you will be asked to review the license agreement for information on returning to Windows or to shut down your LifeBook notebook.

WINDOWS PRODUCT ACTIVATION (WINDOWS XP ONLY)

If your system has Windows XP as an operating system, it has already been pre-installed and pre-activated when you receive the system.

In the event you need to re-install Windows XP (e.g., after making significant configuration changes), it may be necessary to reactivate the operating system. To do so, use the following information.

- After re-installing Windows XP, you have thirty days to activate it. Product activation ensures that you are the authorized owner of the Windows XP operating system.
- Until you activate the product, you will be prompted whenever you turn on the system that activation is required. Follow the on-screen directions to activate your operating system. The product only needs to be

activated once, unless significant hardware changes are made to your system.

- Note that Product Activation and Registration are not the same thing. Registration is optional, whereas Product Activation is a required procedure.

REGISTERING YOUR LIFEBOOK NOTEBOOK

How do I register?

To register, visit our Web site at:
us.fujitsu.com/computers

INSTALLING CLICK ME!

The first time you boot up your system, you will see an icon called Click Me! in the Start menu. When you click the Click Me! icon, your system will automatically build the icon tray in the bottom right of the screen. These icons provide links to utilities that you will frequently access.

Click Me! will install additional system utilities to maximize the performance of your system.

Power Management

Your Fujitsu LifeBook notebook has many options and features for conserving battery power. Some of these features are automatic and need no user intervention, such as those for the internal modem. However, others depend on the parameters you set to best suit your operating conditions, such as those for the display brightness. Internal power management for your notebook may be controlled from settings made in your operating system, pre-bundled power management application, or from settings made in BIOS setup utility.

Besides the options available for conserving battery power, there are also some things that you can do to prevent your battery from running down as quickly. For example, you can create an appropriate power saving profile, put your notebook into Suspend mode when it is not performing an operation, and you can limit the use of high power devices. As with all mobile, battery powered computers, there is a trade-off between performance and power savings.

POWER/SUSPEND/RESUME BUTTON

When your LifeBook notebook is active, the Power/Suspend/Resume button can be used to manually put your notebook into Suspend mode. Push the Power/Suspend/Resume button when your notebook is active, but not actively accessing anything, and immediately release the button. You will hear two short beeps and your system will enter Suspend mode. *(See figure 2-3 on page 6 for location)*

If your LifeBook is suspended, pushing the Power/Suspend/Resume button returns your notebook to active operation. You can tell whether the system is Suspended by looking at the Power indicator. *(See figure 2-3 on page 6)* If the indicator is visible and not flashing, your notebook is fully operational. If the indicator is visible *and* flashing, your notebook is in Suspend mode. If the indicator is not visible, the power is off or your notebook is in Hibernation mode. *(See Hibernation Feature)*

SUSPEND MODE

Suspend or Standby mode in Windows saves the contents of your LifeBook notebook's system memory during periods of inactivity by maintaining power to critical parts. This mode will turn off the CPU, the display, the hard drive, and all of the other internal components except those necessary to maintain system memory and allow for restarting. Your notebook can be put in Suspend mode by:

- Pressing the Power/Suspend/Resume button when your system is turned on.
- Selecting Standby from the Windows Shut Down menu.
- Timing out from lack of activity.
- Allowing the battery to reach the Dead Battery Warning condition.

Your notebook's system memory typically stores the file on which you are working, open application information, and any other data required to support operations in progress. When you resume operation from Suspend mode, your notebook will return to the point where it left off. You must use the Power/Suspend/Resume button to resume operation, and there must be an adequate power source available, or your notebook will not resume.

- If you are running your LifeBook notebook on battery power, be aware that the battery continues to discharge while your notebook is in Suspend mode, though not as fast as when fully operational.
- Disabling the Power/Suspend/Resume button prevents it from being used to put your LifeBook notebook in Suspend or Hibernation (Save-to-Disk) mode. The resume function of the button cannot be disabled.
- The Suspend or Hibernation (Save-to-Disk) mode should not be used with certain PC Cards. Check your PC Card documentation for more information. When PC Cards or external devices are in use, Hibernation (Save-to-Disk) mode cannot return to the exact state prior to suspension, because all of the peripheral devices will be re-initialized when the system restarts.
- If your LifeBook notebook is actively accessing information when you enter the Suspend or Hibernation (Save-to-Disk) mode, changes to open files are not lost. The files are left open and memory is kept active during Suspend mode or the memory is transferred to the internal hard drive during Hibernation mode.

The main advantage of using the Hibernation (Save-to-Disk) function is that power is not required to maintain your data. This is particularly important if you will be leaving your LifeBook notebook in a suspended state for a prolonged period of time. The drawback of using Hibernation mode is that it lengthens the power down and power up sequences and resets peripheral devices.