APPENDIX H
USER MANUAL (PART 2)

This document must not be copied or reproduced, except in full without the written permission of the Manager, EMC Technologies Pty Ltd. The certificate on page 3 may be reproduced in full.
www.emctech.com.au

HIBERNATION (SAVE-TO-DISK) FEATURE

The Hibernation feature saves the contents of your LifeBook notebook's system memory to the hard drive as a part of the Suspend/Resume mode. You can enable or disable this feature.

Enable or Disable the Hibernation Feature

The default settings is not enabled. To enable or disable the Hibernation feature follow these easy steps:

1. From the **Start** menu, select **Settings**, and then select **Control Panel**.
2. From the **Control Panel** select **Power Options**.
3. Select the **Hibernation** tab. Select the box to enable or disable this feature.

Using the Hibernation Feature

1. From the **Start** menu, select **Settings**, and then select **Control Panel**.
2. From the **Control Panel** select **Power Options**.
3. Select the **Advanced** tab. Select **Hibernate** from the pull down menu for Power buttons.

DISPLAY TIMEOUT

The Video Timeout is one of the power management parameters. This feature saves power by turning off the display if there is no keyboard or pointer activity for the user selected timeout period. Any keyboard or pointer activity will cause the display to restart automatically. This feature is independent of the Power/Suspend/Resume button and can be enabled and disabled in Windows and BIOS setup utility. *(See BIOS Setup Utility on page 29 for more information)*

HARD DISK TIMEOUT

The Hard Disk Timeout is another one of the power management parameters. This feature saves power by turning off the hard drive if there is no hard drive activity for the user selected timeout period. Any attempt to access the hard drive will cause it to restart automatically. This feature is independent of the Power/Suspend/Resume button and can be enabled and disabled in Windows and BIOS setup utility. *(See BIOS Setup Utility on page 29 for more information)*

WINDOWS POWER MANAGEMENT

Power Management

The Power Management icon located in the Windows Control Panel allows you to configure some power management settings. For example, you can use Power Management to set the timeout values for turning off the display and hard disks whether you are running the notebook on battery power or one of the adapters. The settings may also be changed in the BIOS. *(See BIOS Setup Utility on page 29 for more information)*

RESTARTING THE SYSTEM

If your system is on and you need to restart it, be sure that you use the following procedure.

1. Click the **Start** button, and then click **Shut Down**.
2. Select the **Restart** option from within the Windows Shut Down dialog box.
3. Click **OK** to restart your notebook. Your notebook will shut down and then reboot.

Turning off your notebook without exiting Windows, or turning it on within 10 seconds of being shut off may cause an error when you start the next time.

POWER OFF

Before turning off the power, check that the Hard Drive, optical drive, PC Card, and Floppy Disk indicators are all Off. *(See figure 2-3 on page 6)*. If you power-off while accessing a disk or PC Card there is a risk of data loss. To ensure that the notebook shuts down without error, use the Windows shutdown procedure.

Be sure to close all files, exit all applications, and shut down your operating system prior to turning off the power. If files are open when you turn the power off, you will lose any changes that have not been saved, and may cause disk errors.

Using the correct procedure to shut down from Windows allows your notebook to complete its operations and turn off power in the proper sequence to avoid errors. The proper sequence is:

1. Click the **Start** button, and then click **Shut Down** or **Turn Off Computer**.
2. Select the **Shut Down** option from within the Windows Shut Down dialog box.
3. Click **OK** to shut down your notebook.

If you are going to store your notebook for a month or more see Care and Maintenance Section.

4

User-Installable Features

Lithium ion Battery

Your LifeBook notebook has a Lithium ion battery that provides power for operating your notebook when no external power source is available. The battery is durable and long lasting, but should not be exposed to extreme temperatures, high voltages, chemicals or other hazards.

The Lithium ion battery operating time may become shorter if it is used under the following conditions:

- When used at temperatures that exceeds a low of 5°C or a high of 35°C. Extreme temperatures not only reduce charging efficiency, but can also cause battery deterioration. The Charging icon on the Status Indicator panel will flash when you try to charge a battery that is outside its operating temperature range. *(See Battery Charging Indicators on page 12 for more information)*
- When using a high current device such as a modem, Super-Multi DVD drive, CD-ROM drive, DVD/CD-RW combo drive, or the hard drive, using the AC adapter will conserve your battery life.

Do not leave a faulty battery in your LifeBook notebook. It may damage your AC adapter, optional Auto/Airline adapter, another battery or your notebook itself. It may also prevent operation of your notebook by draining all available current into the bad battery.

- Actual battery life will vary based on screen brightness, applications, features, power management settings, battery condition and other customer preferences. CD-ROM drive, Super-Multi DVD drive, DVD/CD-RW drive combo, or hard drive usage may also have a significant impact on battery life. The battery charging capacity is reduced as the battery ages. If your battery is running low quickly, you should replace it with a new one.
- Under federal, state, or local law it may be illegal to dispose of batteries by putting them in the trash. Please take care of our environment and dispose of batteries properly. Check with your local government authority for details regarding recycling or disposing of old batteries. If you cannot find this information elsewhere, contact your support representative at 1-800-8FUJITSU (1-800-838-5487)

RECHARGING THE BATTERIES

If you want to know the condition of the primary Lithium ion battery, check the Battery Level indicator located on the Status Indicator panel. The indicator changes as the battery level changes.

The Lithium ion battery is recharged internally using the AC adapter or Auto/Airline adapter. To recharge the battery make sure the battery that needs to be charged is installed in your LifeBook notebook and connect the AC or Auto/Airline adapter.

Make sure that the Battery Charging indicator and the percentage charge is shown inside the Battery Level icon on the Status Indicator Panel.

There is no memory effect on the Lithium ion battery therefore you do not need to discharge the battery completely before recharging. The charge times will be significantly longer if your notebook is in use while the battery is charging. If you want to charge the battery more quickly, put your notebook into Suspend mode, or turn it off while the adapter is charging the battery. *(See Power Management on page 32 for more information on Suspend mode and shutdown procedure)*

Using heavy current devices such as Modem or frequent DVD/CD-RW/CD-ROM accesses may prevent charging completely.

Low Battery State

When the battery is running low, a low battery notification message will appear. If you do not respond to the low battery message, the batteries will continue to discharge until they are too low to operate. When this happens, your notebook will go into Suspend mode. There is no guarantee that your data will be saved once the notebook reaches this point.

- Once the low battery notification message appears, you need to save all your active data and put your LifeBook notebook into Suspend mode until you can provide a new power source. You should provide a charged battery, an AC power adapter, or Auto/Airline adapter as soon as possible.
- When you are in Suspend mode there must always be at least one power source active. If you remove all power sources while your LifeBook notebook is in Suspend mode, any data that has not been saved to the hard drive will be lost.

Dead Battery Suspend mode shows on the Status indicator just like the normal Suspend mode. Once your notebook goes into Dead Battery Suspend mode you will be unable to resume operation until you provide a source of power either from an adapter, or a charged battery. Once you have provided power, you will need to press the Power/Suspend/Resume button to resume operation.

In the Dead Battery Suspend mode, your data can be maintained for some time, but if a power source is not provided promptly, the Power indicator will stop flashing and go out, meaning that you have lost the data that was not stored. Once you provide power, you can continue to use your notebook while an adapter is charging the battery.

Shorted Batteries

The Status Indicator panel uses a symbol inside the battery outline of the Battery Level indicator to display the operating level available in that battery. *(See figure 2-9 on page 11)* If this display shows a Shorted Battery, it means the battery is damaged and must be replaced so it does not damage other parts of your LifeBook notebook.

REPLACING THE BATTERY

With the purchase of an additional battery, you can have a fully charged spare to swap with one that is not charged. There are two ways to swap batteries, cold-swapping and hot-swapping:

Cold-swapping Batteries

To cold-swap batteries in your battery bay follow these easy steps: *(Figure 4-1)*

1. Have a charged battery ready to install.
2. Shut down your notebook and disconnect the AC adapter.
3. Unlock the battery bay release latch by pushing the latch release away from the battery pack and sliding the battery bay release latch towards the latch release *(Figure 4-1)*.
4. Continue to press the latch release button away from the battery pack, and lift the battery out of the bay by inserting a thumbnail under the edge of the battery at the lift slot.
5. Slide a new battery into the bay.
6. Slide the battery bay release latch back to its original position to lock the battery into place.
8. Plug in the AC adapter and turn the power on.

Hot-swapping Batteries

To hot-swap batteries in your battery bay follow these easy steps: *(Figure 4-1)*

Be sure to plug in an AC Adapter prior to removing the battery. There is no bridge battery present to support the system while the battery is being replaced. If you do not use an AC Adapter you will lose any unsaved files.

1. Plug an AC Adapter into the system and connect it to a power outlet.

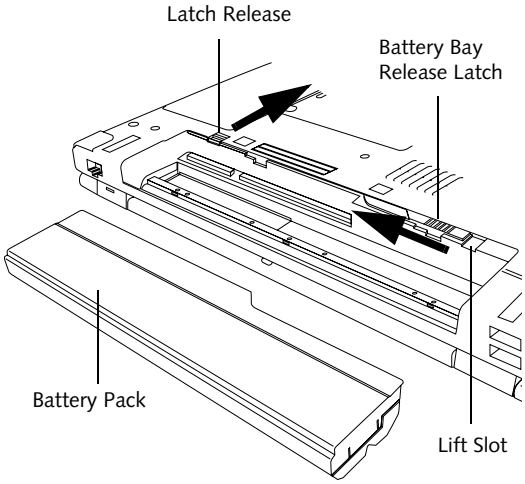

Figure 4-1. Removing a Battery

2. Follow steps 3 through 5 in “Cold Swapping Batteries”.

If the Lithium ion battery connector is not fully seated, you may not be able to use your notebook or charge your battery.

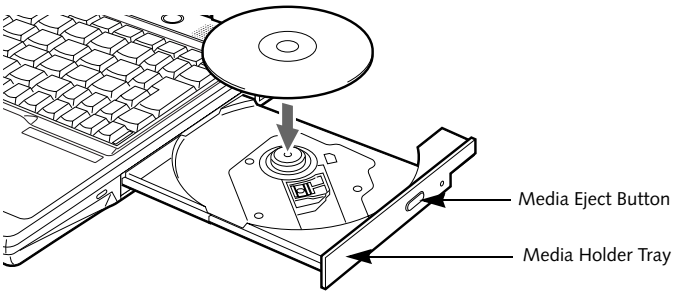

Figure 4-2. Optical Drive

Optical Drive

There is a variety of media available to use with your system, depending upon the system configuration you have selected. Super-Multi DVD drives, DVD/CD-RW Combo drives, and CD-ROM drives are collectively known as "optical drives".

A CD-R or DVD-R disc can only be written to once; CD-RW or DVD-RW discs can be written to over and over. CD-R and CD-RW discs hold up to 700MB of data. DVD-R and DVD-RW discs hold up to 4.7 GB of data.

Depending upon the configuration of your LifeBook notebook, you may have one of the following drives:

- **Super-Multi DVD:** The Super-Multi DVD drive combines seven recordable formats in a single drive (DVD-R, DVD+R, DVD-RW, DVD+RW, DVD-RAM, CD-R, and CD-RW), making it the most versatile drive to date.
- **DVD/CD-RW combo:** A DVD/CD-RW combo drive allows you to access movie, software, data, or audio DVD/CDs, and to write data onto recordable CD-R and CD-RW discs.
- **CD-ROM:** A CD-ROM drive allows you to access software, data, or audio CDs.

Install your media player software before first using the DVD, DVD/CD-RW, or CD-ROM media drives. Refer to the applicable readme file on the Driver Applications CD-ROM.

MEDIA PLAYER SOFTWARE

Super-Multi DVD model only: With the Super-Multi DVD drive and media player software you can play DVD movies and music CDs on your LifeBook notebook. The media player includes controls which allow you to take full advantage of the features of a DVD movie, as well as standard features such as fast forward, fast reverse, pause, etc. With this drive you can also burn onto recordable DVD-R/RW, DVD+R/RW, or CD-R/RW discs.

DVD/CD-RW Combo model only: With the combo drive, you can play DVD movies, read audio CDs, and write data onto recordable CD-R or CD-RW discs.

CD-ROM model only: With the CD-ROM drive, you can read software, audio, or data CD discs.

- Do not operate your optical drive unless your LifeBook notebook is sitting on a flat surface. Using a drive when the system is not level may damage the drive or prevent proper operation.
- Prolonged use of the optical drive, such as watching a DVD movie, will substantially reduce your battery life if no other power source is attached.

LOADING MEDIA ON YOUR DRIVE

To load a disc into your optical drive:

1. Push and release the eject button on the front of the optical drive to open the holder tray. The tray will come out of the LifeBook notebook a short distance.
2. Gently pull the tray out until a media disc can easily be placed in the tray.

There may be a protective sheet in the tray from when it was shipped; please make sure it is removed before operating the drive.

- You should periodically check the Fujitsu web site at us.fujitsu.com/computers for current updated drivers.
- All LifeBook DVD players are set to play DVD titles with region code number 1 which is specified for the North American market. The region number is a regional restriction code defined by the DVD Forum acting on Hollywood requirements. Different region codes are recorded on video DVD titles for publication in different areas of the world. If the regional code of the DVD player does not match the regional codes on the titles, then playback is impossible.
- You can change the region code on the DVD player using the Properties menu of the DVD software. Note, however, that **you can only change the region code up to four times.** After the fourth change, the last region code entered becomes permanent, and cannot be changed.

3. Place the media into the tray, label side up, with the hole in the center of the disc. Snap the disc onto the raised circle in the center of the tray.
4. Gently push the holder tray back in until you hear a click. *(Figure 4-3)*

If you have disabled the Auto Insert Notification Function, you will have to start the drive from your desktop, since your LifeBook notebook will not automatically recognize that media has been loaded.

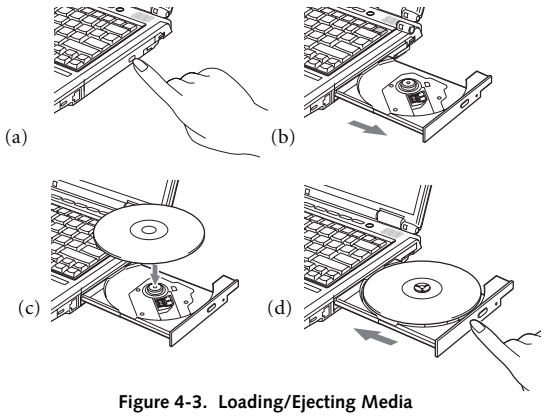

Figure 4-3. Loading/Ejecting Media

REMOVING MEDIA

1. Push and release the eject button on the front of the optical drive. This will stop the drive and the holder tray will come out of the LifeBook notebook a short distance.
2. Gently pull the tray out until the disc can easily be removed from the tray.
3. Carefully remove the media disc from the holder tray.
4. Gently push the holder tray back in until you hear a click.

USING THE MEDIA PLAYER SOFTWARE

Depending upon its configuration, your system may not have the media player software pre-installed. If it is not installed, reference the documentation that accompanies the media application.

Starting a DVD Movie (DVD Models only)

1. Insert the DVD movie into the optical drive of your notebook. If the CD AutoRun feature activates, skip Step 2.
2. The first time you insert a movie into the DVD/CD-RW tray, you will be prompted to select what you want the system to do when discs are inserted (e.g., start automatically or wait for a prompt). Until you make a selection, you will receive the same prompt whenever you insert a disc.
3. Click **OK** to close the About DVD Player Performance dialog box and the movie will begin.

Opening the Media Player Control Panel

With most DVD-ROMs, you have the option of altering how the movie should play and what you wish to view. You can do this by using the media player control panel and the mouse.

1. Right-click on the movie screen to open a dropdown menu for options.
2. Select **View,** then **Player** for all the controls available. This will open the control panel into the bottom of the screen.

Using the Media Player Control Panel

The media player software allows you to watch the movie much like a VCR player. You can pause, rewind, fast-forward and stop the movie at any point.

1. To Pause the movie, click the on-screen ⏸ button.
2. To Rewind the movie, click the ◀◀ button to rewind to a specific portion of the movie, or the ⏮ button to return to the opening screen.

3. To Fast-forward the movie, click the ⏩ button to forward to a specific portion of the movie, or the ⏭ button to jump to the ending credits.
4. To Stop the movie, click the ■ button.

Exiting the Media Player

1. Click the ✕ located in the upper right corner of the title bar. This will open a media player dialog box.
2. Click Yes to stop and exit the movie, or No to close the media player dialog box and return to the movie.

USING DOLBY™ HEADPHONE

The Dolby Headphone utility lets you enjoy multi-channel sound sources with realistic surround sound using your *conventional* stereo headphones.

Dolby Headphone is a signal processing system that enables your stereo headphones to realistically portray the sound of a five-speaker playback system.

- Media discs which do not have the Dolby Surround 5:1 symbol will not support Dolby Headphone.
- After making changes to the Dolby Headphone feature and clicking OK, wait at least ten seconds before making another change in order to allow the system to stabilize.

To use the Dolby Headphone feature, perform the following steps:

1. Insert the disc in the media player tray. When you do so, WinDVD will start automatically.
2. Click on the Fujitsu logo on the WinDVD control panel. If the disc supports Dolby Surround 5.1, a drop down menu appears.
3. Verify that Dolby headphones is checked on the menu. If you do not want it active, select Disable.

USING MEDIA PLAYER ON BATTERY POWER

Since optical drives consume a lot of power, your overall battery life will be significantly shorter when operating the optical drive continuously (such as watching a DVD movie) than during standard operation. Many movies run-times are longer than your LifeBook notebook can support on a single charged battery. If you are watching a DVD movie on battery power you may need to swap in an additional, charged battery or attach AC power during the movie to view it in its entirety.

- Prolonged use of the optical drive, such as watching a DVD movie, will greatly reduce your notebook's battery life.
- Many movie run-times are longer than your system can support on a single battery. If you are watching a DVD movie on battery power you may need to swap in an additional, charged battery or attach AC power during the movie to view it in its entirety.
- An additional fully-charged battery is highly recommended if you will be watching DVD movies on battery power. If you don't have an additional battery, you may purchase one either online at us.fujitsu.com/computers or by calling 1-877-372-3473.

To Watch a Movie on Battery Power:

1. Have an additional full-charged battery or your AC adapter ready for use.
2. Start watching your DVD movie.
3. When the low battery warning occurs, immediately stop the movie and exit the media player.

If you do not stop the media player quickly and the LifeBook notebook attempts to auto-suspend (critical battery low state) the LifeBook notebook will shut down improperly. If this occurs, you will need to perform a hard reset and follow the instruction, if any, presented to you before the system will reboot.

4. Power down your LifeBook notebook and replace the discharged battery with an additional fully-charged battery. If you do not have an additional battery, you may attach AC power as soon as you see the low battery warning.
5. Resume your LifeBook notebook by pressing the Suspend button again. This is not required if you attached AC power without entering suspend mode.
6. Restart your media player, locate and skip to the chapter of the movie you were last watching.
7. Continue watching your DVD movie.

Some shorter DVD movies may not require you to swap batteries or attach AC power to complete them. However, it is best to be prepared since actual battery life while operating the optical drive cannot be guaranteed.

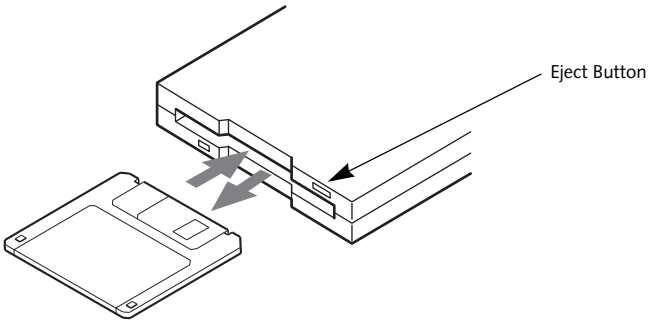

Figure 4-4.Loading/Ejecting a 3.5" Floppy Disk

External USB Floppy Disk Drive

An external USB floppy disk drive is available as an option for your LifeBook notebook. The external floppy disk drive can read and write information on removable 1.44MB and 720KB floppy disks.

Your LifeBook notebook is preconfigured to boot from a USB floppy drive. Reference the BIOS manual for further information on changing the default boot drive. The BIOS manual can be found on the Fujitsu Computer Systems web site: us.fujitsu.com/computers, under Support.

LOADING A DISK

To load a disk into your disk drive, follow these easy steps:

1. Orient the disk so that its label is facing upwards and the shutter side is pointing towards the drive. *(Figure 4-4)*
2. Push the disk into the drive until the Eject button pops out and you hear a click.

When there is no disk in the drive, the Eject button is flush with your notebook.

EJECTING A DISK

To eject a disk from the disk drive, follow these easy steps:

1. Check that the Floppy Disk Drive Access indicator is inactive.
2. Press the Eject button. This will push your disk partially out of the drive.
3. Remove the disk.

If you eject the disk while the Floppy Disk Drive Access indicator is active, there is a risk of damaging the data on the disk, the disk itself or even the disk drive.

PREPARING A DISK FOR USE

Before you can use a new disk, it needs to be prepared so your LifeBook notebook knows where to store information. This preparation is called formatting or initializing a disk. You will need to format new disks, unless they are preformatted. *(Please refer to your operating system manual for step-by-step instructions on formatting a disk)*

To prevent accidental erasure of the data stored on a disk, slide the "write protect" tab until a small hole is exposed. This sets the disk into a protected state where nothing can be added or removed. If you want to add or remove data on a protected disk, slide the "write protect" tab to close the small hole. *(Figure 4-5)*

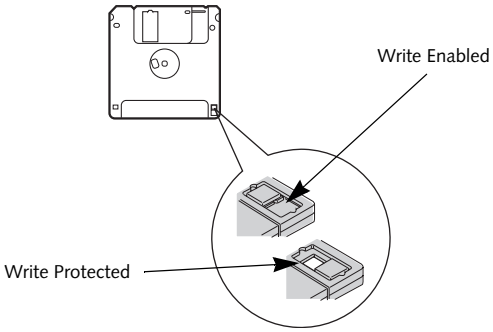

Figure 4-5. Floppy Disk Write Protect

Formatting a floppy disk that already contains data will erase all of the information on the disk.

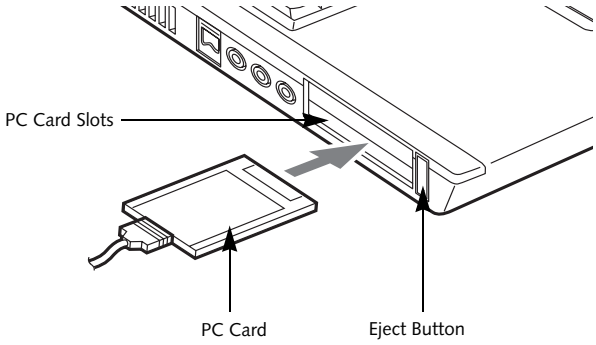

Figure 4-6. Installing/Removing PC Cards

PC Cards

Your Fujitsu LifeBook notebook supports two Type I or Type II PC Cards or one Type III PC Card, which can perform a variety of functions.

Some available PC Cards:

- 4-in-1 media card adapter
- Compact Flash media card adapter
- Fax/data modem cards
- Local area network (LAN) cards
- IDE solid-state disk cards
- SCSI cards
- Smart Card holder
- Other PC Cards that conform to PCMCIA 2.1 or CardBus standards

For further information, refer to the instructions supplied with your PC Card.

INSTALLING PC CARDS

PC Cards are installed in the PC Card slot. To install a PC Card, follow these easy steps: *(Figure 4-6)*

- Installing or removing a PC Card during your LifeBook notebook's shutdown or bootup process may damage the card and/or your notebook.
- Do not insert a PC Card into a slot if there is water or any other substance on the card as you may permanently damage the card, your LifeBook notebook, or both.
- Be sure to orient the card properly before inserting it. Failure to do so could result in damage to the card socket.

1. See your PC Card manual for specific instructions on the installation of your card. Some PC Cards may require your notebook to be Off while installing them.
2. Make sure there is no PC Card currently in the slot. If there is, see Removing PC Cards.
3. Insert your PC Card into the slot, with the product label facing up.
4. Push the card into the slot firmly until it is seated in the opening. You will hear a click and the Eject button will pop away from your notebook.
5. Flip the Eject button towards the rear of your notebook to lock the PC Card.

REMOVING PC CARDS

To remove a PC Card, follow these easy steps:

1. See your PC Card manual for specific instructions on removing your card. Some PC Cards may require your notebook to be in Suspend Mode or Off while removing them.

If the dialog box states that the device cannot be removed, you must save all of your open files, close any open applications and shut down your notebook.

2. Flip the Eject button towards the front of your notebook until it is fully extended, and then push it in until it is flush with the notebook. This will push the PC Card slightly out of the slot allowing you to remove the card.

If the PC Card has an external connector and cable, do not pull the cable when removing the card.

SMART CARD READER

An embedded Smart Card Reader is provided on your LifeBook notebook. Smart Cards are the same size and shape as credit cards, but they contain an integrated microprocessor chip. The chip can hold a variety of different information, and provides the user with many possible options, such as allowing them to make secure purchases, pay for phone calls, store security information, and provide personal identification and information.

In order to use the embedded Smart Card Reader, you must purchase an optional Smart Card adapter and third-party software for installation into an available Type II PC Card slot.

Memory Upgrade Module

Your Fujitsu LifeBook notebook comes with a minimum of 256 MB of high speed Double Data Rate Synchronous Dynamic RAM (DDR 333 SDRAM) factory installed. To increase your LifeBook notebook's memory capacity, you may install an additional memory upgrade module. The memory upgrade must be a dual-in-line (DIMM) SDRAM module. To ensure 100% compatibility, purchase the SDRAM module only from the Fujitsu web store at us.fujitsu.com/computers.

- Do not remove any screws from the memory upgrade module compartment except the ones specifically shown in the directions for installing and removing the memory upgrade module.
- The memory upgrade module can be severely damaged by electrostatic discharge (ESD). Be sure you are properly grounded when handling and installing the module.

INSTALLING MEMORY UPGRADE MODULES

1. Turn off power to your LifeBook notebook, remove any power adapter (AC or auto/airline), and remove the battery pack.
2. Make sure that all the connector covers are closed.
3. Turn the notebook bottom side up, and remove the screws of the memory upgrade module compartment. *(Figure 4-7)*
4. Remove the cover.

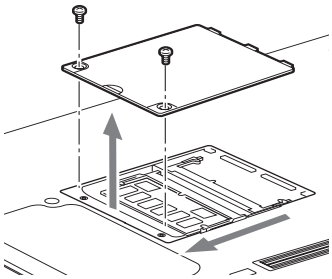

Figure 4-7. Opening the Memory Upgrade Compartment

5. Remove the memory upgrade module from the static guarded sleeve.
6. Align the memory upgrade module with the part side up. Align the connector edge of the memory upgrade module with the connector slot in the compartment.
7. Insert the memory upgrade module at a 45° angle. Press the connector edge of the module firmly down and into the connector until it lodges under the retaining clip. You will hear a click when it is properly in place. *(Figure 4-8)*

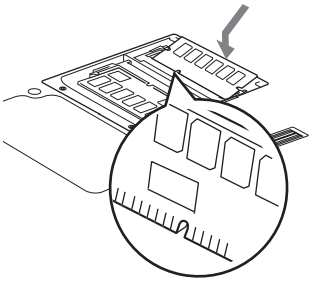

Figure 4-8. Installing a Second Memory Module

8. Replace the cover.*(Figure 4-9)*
9. Replace the screws.

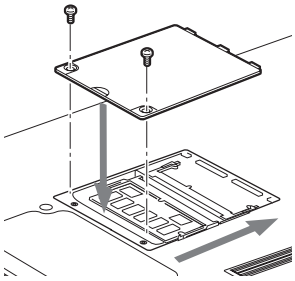

Figure 4-9. Replacing the Memory Compartment Cover

The memory upgrade module is not something you routinely remove from your notebook. Once it is installed, you can leave it in place unless you want to change system memory capacity.

TO REMOVE A MEMORY UPGRADE MODULE

1. Perform steps 1 through 4 of Installing a Memory Upgrade Module.
2. Pull the clips sideways away from each side of the memory upgrade module at the same time.
3. While holding the clips out, remove the module from the slot by lifting it up and pulling towards the rear of your notebook. *(Figure 4-10)*

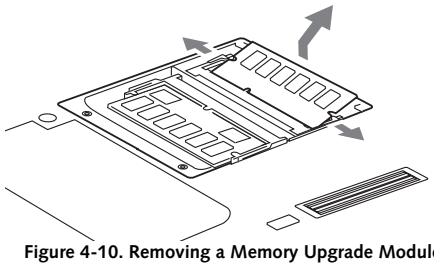

Figure 4-10. Removing a Memory Upgrade Module

4. Store the memory upgrade module in a static guarded sleeve.
5. Replace the cover. *(Figure 4-9)*
6. Replace the screws.

CHECKING THE MEMORY CAPACITY

Once you have changed the system memory capacity by replacing the installed module with a larger one, be sure to check that your notebook has recognized the change.

Check the memory capacity by clicking [Start] -> Settings -> Control Panel, then double-clicking the System icon. Select the General tab and check the amount of memory under “Computer:”.

There may be a variation between the actual memory size and what is displayed. This is due to the fact that your system uses a video graphics chip which dynamically allocates system memory to accelerate graphics performance. Up to 64 MB of memory is dynamically shared on an as-needed basis using Dynamic Video Memory Technology (DVMT).

If the total memory displayed is incorrect, check that your memory upgrade module is properly installed. *(If the module is properly installed and the capacity is still not correctly recognized, see Trouble-shooting on page 55.*

E Series.book Page 47 Wednesday, April 14, 2004 10:28 AM

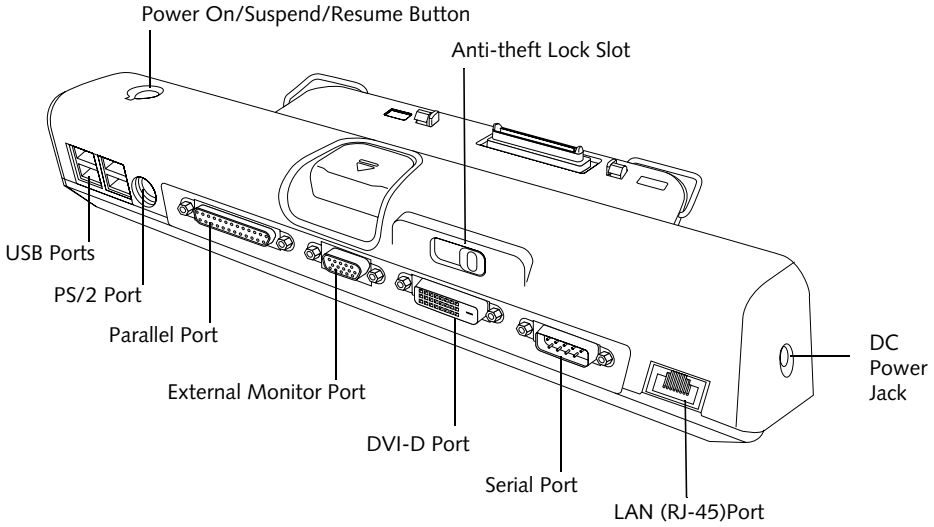

Figure 4-11. Port Replicator back panel

Port Replicator

An optional port replicator is available for your Fujitsu LifeBook notebook. The port replicator extends the functionality of your notebook by providing ports to connect PS/2 devices, a LAN (RJ-45) cable, USB devices, an external monitor, a parallel device, a digital video device, and a serial device. The port replicator connects to the bottom of your notebook. *(See Device Ports on page 50 for more information)*

BACK PANEL COMPONENTS

The following is a brief description of the port replicator's back panel components. *(Figure 4-11)*

LAN (RJ-45) Jack

The LAN port allows you to connect a LAN (RJ-45) cable. Note that when your notebook is connected to the port replicator, the LAN port on the system is not accessible; the port replicator LAN port is the only one that can be used when it as attached to the system.

PS/2 Keyboard/Mouse Port

The PS/2 keyboard/mouse port allows you to connect external PS/2 devices such as an external PS/2 keyboard or mouse.

USB Ports

There are four USB 2.0 ports on the port replicator. USB 2.0 ports allow you to connect any USB 2.0 device for up to 480 Mbps transfer rate. USB 2.0 is backward-compatible with USB 1.1 devices.

External Monitor Port

The external monitor port allows you to connect an external VGA or SVGA CRT monitor.

Parallel Port

The parallel port allows you to connect parallel devices. (This is sometimes referred to as an LPT port.)

Serial Port

The serial port allows you to connect serial (RS-232C) devices. (This is sometimes referred to as a COM port.)

DC Power Jack

The DC power jack allows you to plug in the AC adapter or the optional Auto/Airline adapter to power your notebook.

Anti-theft Lock Slot

The anti-theft lock slot allows you to lock the computer into the port replicator or to secure the port replicator alone.

Power On/Suspend/Resume Button

The power on/suspend/resume button allows you to poer on or suspend/resume your system via the port replicator.

Digital Video Interface (DVI-D)

The DVI-D port allows you to connect a flat-panel LCD monitor or television that is equipped with a DVI-D port for ultra-crisp digital images and graphics.

Port Replicator Release Button

Slide the port replicator release button to remove the port replicator from your notebook.

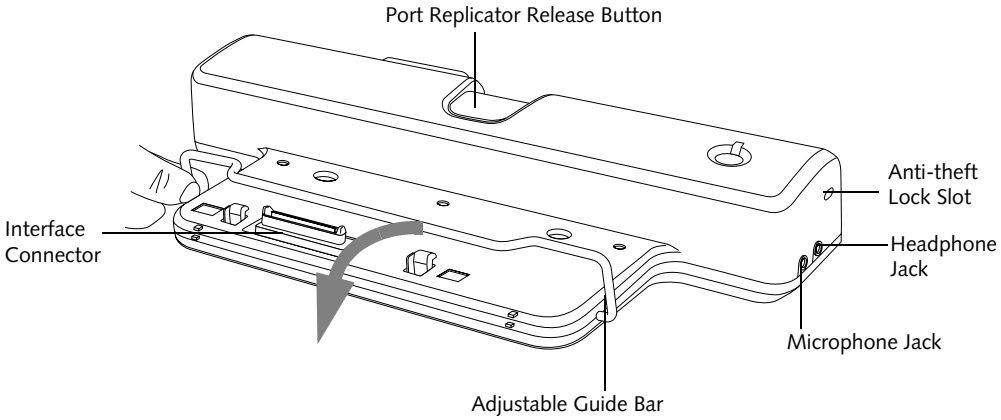

Figure 4-12. Port Replicator front panel

FRONT PANEL COMPONENTS

The following is a brief description of the optional Port Replicator's front panel components.

Interface Connector

The interface connector connects the optional port replicator to your notebook.

Adjustable Guide Bar

The adjustable guide bar allows you to use the port replicator with different LifeBook models.

Microphone Jack

The microphone jack allows you to attach an external microphone via the port replicator.

Headphone Jack

The headphone jack allows you to connect headphones to the port replicator.

Anti-theft Lock Slot

The anti-theft lock slot allows you to secure the port replicator with an optional security lock/cable.

Do not hold the system by the port replicator. The port replicator and/or the system could be damaged if the port replicator is used as a handle.

ATTACHING THE PORT REPLICATOR

The port replicator can be attached to your notebook while the power is on, while in suspend mode, or while the power is off.

The AC adapter must be plugged into the port replicator in order to use all of the ports. If the adapter is connected to the system, the USB and PS/2 ports on the port replicator will not be usable.

To attach the port replicator, follow these easy steps:

1. Unplug the AC adapter from the system if it is connected.
2. Depending upon the configuration of your system, you may need to change the position of the adjustable guide bar. Note the location of the interface port on the bottom of your LifeBook:
   - If the interface port is approximately an inch from the edge of the system, swing the guide bar backwards until it rests atop the port replicator base.
   - If the interface port is approximately two inches away from the edge of the system, swing the guide bar forward until it snaps into place inside the positioners. (See the grey arrow in Figure 2).
3. Center your notebook over the port replicator so that the interface connector on the lower surface of your notebook aligns with the connector on top of the port replicator *(Figure 4-13)*.
4. Push your notebook down to connect it securely to the port replicator.
5. Plug the AC adapter into the DC power jack and plug the other end into a power outlet.

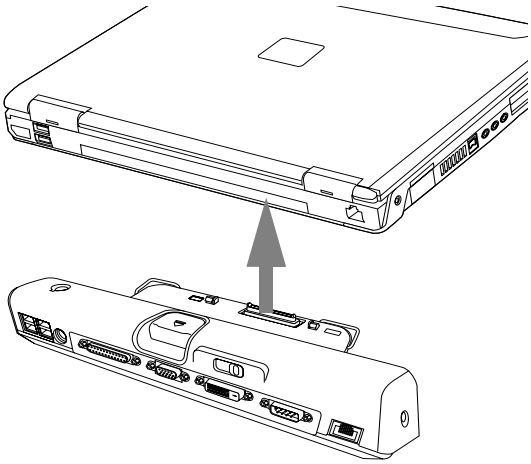

Figure 4-13. Attaching the Port Replicator

LOCKING THE PORT REPLICATOR

There are two anti-theft lock slots on the port replicator: one on the back *(Figure 4-11)* and one on the end *(Figure 4-12)*. Either slot can be used to secure the port replicator alone. The anti-theft lock slot on the back of the port replicator can also be used to lock the system into the port replicator.

Follow the instructions that came with the lock/cable device for information on its use.

To lock the system to the port replicator:

1. Install the system onto the port replicator as detailed in "Attaching the Port Replicator".
2. Slide the anti-theft lock slot on the rear of the port replicator all the way to the left to lock the system into place *(Figure 4-14)*.
3. Secure the lock per the instructions that came with the locking device. Until it is unlocked, the system and port replicator are locked together.

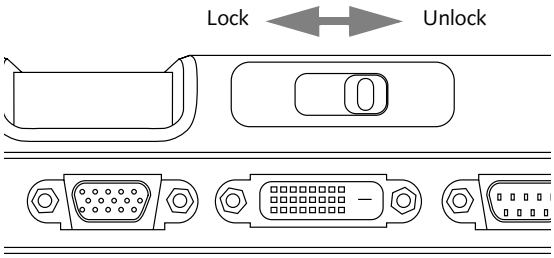

Figure 4-14. Locking the Port Replicator

DETACHING THE PORT REPLICATOR

The optional port replicator can be detached from your notebook while the power is on, while in suspend mode, or while the power is off. To detach the port replicator follow these easy steps:

1. Unlock the anti-theft lock if the system is locked into place.
2. Press the port replicator release button to release the system from the port replicator.
3. While holding the port replicator release button down, lift your notebook to detach it from the port replicator.

Device Ports

Your Fujitsu LifeBook notebook and the optional Port Replicator come equipped with multiple ports to which you can connect external devices including: disk drives, keyboards, modems, printers, etc.

MODEM (RJ-11) TELEPHONE JACK

The modem (RJ-11) telephone jack is used for an internal modem. To connect the telephone cable follow these easy steps:

1. Align the connector with the port opening.
2. Push the connector into the port until it is seated.
3. Plug the other end of the telephone cable into a telephone outlet. *(Figure 4-15)*

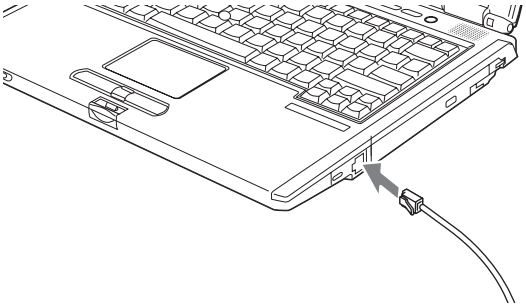

Figure 4-15. Connecting a Modem

The modem sound is deactivated by default, to activate modem sound follow these easy steps:

1. Right click on the Speaker icon in your system tray.
2. Select **Open Volume**.
3. Select **Option/Properties**.
4. Under "Show the following volume controls", click on **Phone** and click **OK**.
5. Uncheck the Mute box under Phone Balance.

The internal modem is not intended for use with Digital PBX systems. Do not connect the internal modem to a Digital PBX as it may cause serious damage to the internal modem or your entire LifeBook notebook. Consult your PBX manufacturer's documentation for details. Some hotels have Digital PBX systems. Be sure to find out BEFORE you connect your modem.

- The internal modem is designed to the ITU-T V.90 standard. Its maximum speed of 53000bps is the highest allowed by FCC, and its actual connection rate depends on the line conditions. The maximum speed is 33600bps at upload.
- The internal modem on all Fujitsu LifeBook notebooks from Fujitsu are certified for use in the United States and Canada. The modem may be certified in other countries.

INTERNAL LAN (RJ-45) JACK

The internal LAN (RJ-45) jack is used for a Gigabit (10Base-T/100Base-Tx/1000Base-T/Tx) Ethernet LAN connection. You may need to configure your notebook to work with your particular network. (Please refer to your network administrator for information on your network configuration.) To connect the LAN cable follow these easy steps:

1. Align the connector with the port opening.
2. Push the connector into the port until it is seated.*(Figure 4-16)*
3. Plug the other end of the cable into a LAN outlet.

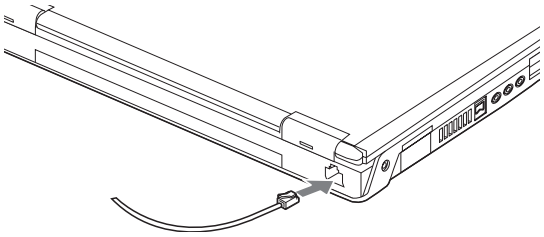

Figure 4-16. Connecting the LAN

PARALLEL PORT

The parallel port, or LPT port, located on the optional Port Replicator allows you to connect parallel devices, such as a printer to your notebook. In order to connect a parallel interface device follow these easy steps:

1. Align the connector with the port opening.
2. Push the connector into the port until it is seated.*(Figure 4-17)*
3. Tighten the two hold-down screws, located on each end of the connector.

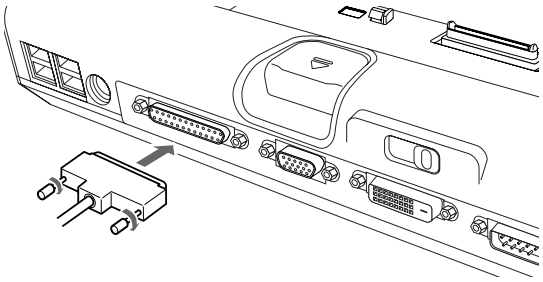

Figure 4-17. Connecting a Parallel Device to Port Replicator

SERIAL PORT

The serial port, or COM port, located on the optional Port Replicator allows you to connect serial devices, such as printers or scanners. In order to connect a serial interface device follow these easy steps:

1. Align the connector with the port opening.
2. Push the connector into the port until it is seated.
3. Tighten the two hold-down screws, located on each end of the connector.

PS/2 PORT

The PS/2 port located on the optional Port Replicator allow you to connect an external keyboard or mouse. In order to connect a PS/2 interface device follow these easy steps:

1. Align the connector with the port opening.*(Figure 4-18)*
2. Push the connector into the port until it is seated.

A mouse or keyboard may be installed and automatically recognized by your notebook without restarting or changing setups.

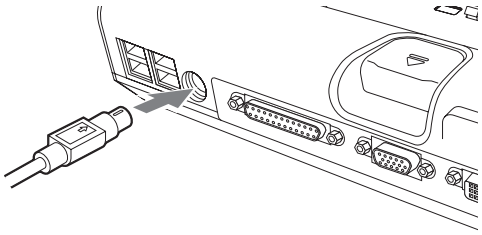

Figure 4-18. Connecting a PS/2 Device

DOCKING PORT

The docking port is used for the connection of your notebook to an optional port replicator or docking station. In order to connect your notebook to one of these devices follow the instructions that came with your docking port. *(See figure 2-7 on page 10 for location)*

UNIVERSAL SERIAL BUS PORTS

The Universal Serial Bus 2.0 ports (USB) allow you to connect USB devices such as external game pads, pointing devices, keyboards and/or speakers.

In order to connect a USB device follow these steps:

1. Align the connector with the port opening.*(Figure 4-19)*
2. Push the connector into the port until it is seated.

Due to the ongoing changes in USB technology and standards, not all USB devices and/or drivers are guaranteed to work.

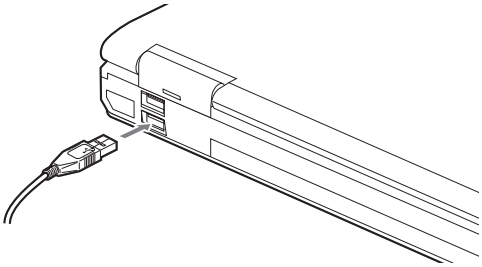

Figure 4-19. Connecting a USB Device

INFRARED PORT

The Infrared IrDA (4Mbps) port allows for wireless data transfer between your notebook and other IrDA-compatible devices, such as another computer or a printer, without the use of a cable. *(See figure 2-6 on page 9 for location)*

It is important to keep in mind that while carrying out this form of communication, both devices must be placed so their infrared ports are directly facing each other without obstruction. The devices must also be separated by at least 6" but no more than 36" for maximum performance.

The following conditions may interfere with infrared communications:

- A television, radio remote control unit, or a wireless headphone is being used nearby.
- Direct sunlight, fluorescent light, or incandescent light shines directly on the port.

- Do not move either device while communication is active as it may interrupt data transmission.
- Be careful not to scratch the infrared port lens. Dirt, scratches, or other surface marks can degrade operation.

STEREO LINE-IN JACK

The stereo line-in jack allows you to connect an external audio source to your notebook, such as an audio cassette player. Your audio device must be equipped with a 1/8" (3.5 mm) stereo mini-plug in order to fit into the stereo line-in jack of your notebook. In order to connect a external audio source follow these easy steps: *(See figure 2-6 on page 9 for location)*

1. Align the connector with the port opening.
2. Push the connector into the port until it is seated.

Turn down the audio volume when connecting electronic devices to the line-in jack. The internal speakers might break if unexpected large sounds are inputted.

The stereo line-in jack will not support an external microphone.

IEEE 1394 PORT

The 4-pin 1394 port allows you to connect digital devices that are compliant with IEEE 1394 standard. The IEEE 1394 standard is easy to use, connect, and disconnect. This port can allow up to 400 Mbps transfer rate. A third-party application may be required to operate your digital device with the 1394 port.

The 1394 port used in this system uses a four-pin configuration. If you intend to interface with devices which use a six-pin configuration, you will need to purchase an adapter.

In order to connect a 1394 device, follow these steps:

1. Align the connector with the port opening.
2. Push the connector into the port until it is seated.*(Figure 4-20)*

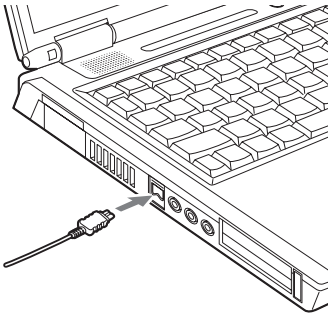

Figure 4-20. Connecting an IEEE 1394 Device

HEADPHONE JACK

The headphone jack allows you to connect headphones or powered external speakers to your notebook. Your headphones or speakers must be equipped with a 1/8” (3.5 mm) stereo mini-plug. In order to connect headphones or speakers follow these easy steps: *(See figure 2-5 on page 8 for location)*

1. Align the connector with the port opening.
2. Push the connector into the port until it is seated.

If you plug headphones into the headphone jack, the built-in stereo speakers will be disabled.

MICROPHONE JACK

The microphone jack allows you to connect an external mono microphone. Your microphone must be equipped with a 1/8”(3.5 mm) mono mini-plug in order to fit into the microphone jack of your notebook. In order to connect a microphone follow these easy steps: *(See figure on page 7 for location)*

1. Align the connector with the port opening.
2. Push the connector into the port until it is seated.

EXTERNAL MONITOR PORT

The external monitor port allows you to connect an external monitor. In order to connect an external monitor follow these easy steps: *(See figure 2-6 on page 9 for location)*

1. Align the connector with the port opening.
2. Push the connector into the port until it is seated.
3. Tighten the two hold-down screws, located on each end of the connector.

Pressing the [Fn] + [F10] keys allows you to change your selection of where to send your display video. Each time you press the key combination, you will step to the next choice, starting with the built-in display panel only, moving to the external monitor only, finally moving to both the built-in display panel and an external monitor.

5 Troubleshooting

Troubleshooting

Your Fujitsu LifeBook notebook is sturdy and subject to few problems in the field. However, you may encounter simple setup or operating problems that you can solve on the spot, or problems with peripheral devices, that you can solve by replacing the device. The information in this section helps you isolate and resolve some of these straightforward problems and identify failures that require service.

IDENTIFYING THE PROBLEM

If you encounter a problem, go through the following procedure before pursuing complex troubleshooting:

1. Turn off your LifeBook notebook.
2. Make sure the AC adapter is plugged into your notebook and to an active AC power source.
3. Make sure that any card installed in the PC Card slot is seated properly. You can also remove the card from the slot, thus eliminating it as a possible cause of failure.
4. Make sure that any devices connected to the external connectors are plugged in properly. You can also disconnect such devices, thus eliminating them as possible causes of failure.
5. Turn on your notebook. Make sure it has been off at least 10 seconds before you turn it back on.
6. Go through the boot sequence.
7. If the problem has not been resolved, refer to the Troubleshooting Table, that follows, for more detailed troubleshooting information.

If you keep notes about what you have tried, your support representative may be able to help you more quickly by giving additional suggestions over the phone.

8. If you have tried the solutions suggested in the Troubleshooting Table without success, contact your support representative:

   Toll free: 1-800-8Fujitsu (1-800-838-5487)
   E-mail: 8fujitsu@us.fujitsu.com
   Web site: us.fujitsu.com/computers.

Before you place the call, you should have the following information ready so that the customer support representative can provide you with the fastest possible solution:

- Product name
- Product configuration number
- Product serial number
- Purchase date
- Conditions under which the problem occurred
- Any error messages that have occurred
- Hardware configuration
- Type of device connected, if any

See the Configuration Label on the bottom of your notebook for configuration and serial numbers. *(See figure 2-7 on page 10 for location)*

SPECIFIC PROBLEMS

Using the Troubleshooting Table

When you have problems with your LifeBook notebook, try to find the symptoms under the Problem column of the troubleshooting table for the feature giving you difficulty. You will find a description of common causes for that symptom under the column Possible Cause and what, if anything, you can do to correct the condition under Possible Solutions. All possible causes or solutions may not apply to your notebook.

TROUBLESHOOTING TABLE

Problem	Page
Audio Problems	page 56
DVD/CD-ROM Drive Problems	page 56
Port Replicator Problems	page 57
Floppy Disk Drive Problems	page 57
Hard Drive Problems	page 57
Keyboard or Mouse Problems	page 58
Memory Problems	page 58
Modem Problems	page 58
Parallel, Serial and USB Device Problems	page 58
PC Card Problems	page 59
Power Failures	page 59
Shutdown and Startup Problems	page 61
Video Problems	page 62
Miscellaneous Problems	page 63

Problem	Possible Cause	Possible Solutions
Audio Problems		
There is no sound coming from the built-in speakers.	The volume is turned too low.	Adjust the volume control on your notebook.
	The software volume control is set too low.	Adjust the sound volume control settings in your software, operating system and applications.
	Headphones are plugged into your notebook.	Plugging in headphones disables the built-in speakers, remove the headphones.
	BIOS audio settings are incorrect.	Set the BIOS setup utility to the default values within the Multimedia Device Configuration menu. *(See BIOS Setup Utility on page 29 for more information)*
	Software driver is not configured correctly.	Refer to your application and operating system documentation for help.
	The speakers have been muted using the Volume icon in the system tray.	Click on the Volume icon in the tool tray on the bottom right of the screen. (It looks like a speaker). If the Mute box is checked, click on it to uncheck it.
DVD/CD-RW/CD-ROM Drive Problems		
LifeBook notebook fails to recognize DVD/CD-RW/ CD-ROM's.	Protective sheet is still in the DVD/CD-RW/CD-ROM drive tray.	Replace DVD/CD-RW/CD-ROM in tray.
	DVD/CD-RW/CD-ROM is not pushed down onto raised center circle of the drive.	Open DVD/CD-RW/CD-ROM tray and re-install DVD/CD-RW/CD-ROM properly.
	DVD/CD-RW/CD-ROM tray is not latched shut.	Push on the front of the DVD/CD-RW/CD-ROM tray until it latches.
	Incorrect DVD Player or no DVD Player software is installed.	Install DVD Player software. *(See "Media Player Software" on page 39 for more information.)*
	Wrong drive designator was used for DVD/CD-RW/CD-ROM in the application.	Verify the drive designator used by the application is the same as the one used by the operating system. When the operating system is booted from a DVD/ CD, drive designations are automatically adjusted. Note that the drive designation can be changed with the Disk Management tool located at Administrative Tools -> Computer Managenment.

Problem	Possible Cause	Possible Solutions
LifeBook notebook fails to recognize DVD/CD-RW/CD-ROM's (continued)	Windows DVD/CD-RW/CD-ROM auto insertion function is disabled.	Start the DVD/CD-RW/CD-ROM from the desktop or application software or re-enable the Windows DVD/CD-RW/CD-ROM auto insertion function.
LifeBook notebook fails to recognize DVD/CD-RW/CD-ROM's.	DVD/CD-RW/CD-ROM is dirty or defective.	Wipe DVD/CD-RW/CD-ROM with a non-abrasive CD cleaning cloth and reinsert. It if still will not work try another DVD/CD-RW/CD-ROM in the drive.
The DVD/CD-RW/CD-ROM Access indicator on the Status Indicator Panel blinks at regular intervals when no DVD/CD-RW/CD-ROM is in the tray or the DVD/CD-RW/CD-ROM drive is not installed.	The Windows DVD/CD-RW/CD-ROM auto insertion function is active and is checking to see if a DVD/CD-RW/CD-ROM is ready to run.	This is normal. However, you may disable this feature.
Port Replicator Problems		
Note: Be sure to power down your LifeBook notebook before adding a printer to the Port Replicator parallel port.		
LifeBook notebook does not turn on when installed in the optional Port Replicator	Port Replicator AC adapter is not plugged in.	Provide power to the Port Replicator.
	Notebook is not properly seated in the Port Replicator.	Remove and re-dock your LifeBook notebook.
Floppy Disk Drive Problems		
You cannot access your floppy disk.	You tried to write to a write protected floppy disk.	Eject the floppy disk and set it to write enable. *(See Preparing a Disk for Use on page 42 for more information)*
	Floppy disk is not loaded correctly.	Eject floppy disk, check orientation and re-insert. *(See Ejecting a Disk on page 42 for more information)*
	The floppy disk drive may not be properly installed.	Remove and re-install your floppy disk drive.
	Security is set to protect access to floppy disk data.	Verify your password and security settings.
Hard Drive Problems		
You cannot access your hard drive.	The setup utility is incorrectly set for your internal (Primary Master) or optional second hard drive (Primary Slave).	Revise BIOS settings to set both Primary Master and Primary Slave correctly. *(See BIOS Setup Utility on page 29 for more information)*
	The wrong drive designator was used by an application when a bootable CD-ROM was used to start the notebook.	Verify drive designator used by application is in use by the operating system. When the operating system is booted from a CD, drive designations are automatically adjusted.
	Security is set so your operating system cannot be started without a password.	Verify your password and security settings.

Problem	Possible Cause	Possible Solutions
Keyboard or Mouse Problems		
The built-in keyboard does not seem to work.	The notebook has gone into Suspend mode.	Push the **Power/Suspend/Resume** button.
	Your application has locked out your keyboard.	Try to use your integrated pointing device to restart your system.
You have installed an external keyboard or mouse, and it does not seem to work.	Your external device is not properly installed.	Re-install your device. *(See Device Ports on page 50 for more information)*
	Your operating system software is not setup with the correct software driver for that device.	Check your device and operating system documentation and activate the proper driver.
	Your mouse or keyboard is connected to the wrong PS/2 port on the optional Port Replicator.	Plug the mouse into the PS/2 Mouse port and the external keyboard or numeric key pad into the PS/2 Keyboard port. *(See PS/2 Port on page 51 for more information)*
You have connected an external keyboard or a mouse and it seems to be locking up the system.	Your operating system software is not setup with the correct software driver for that device.	Check your device and operating system documentation and activate the proper driver.
	Your system has crashed.	Try to restart your notebook. I
Memory Problems		
Your Power On screen, or Main menu of the BIOS setup utility information, does not show the correct amount of installed memory.	Your memory upgrade module is not properly installed.	Remove and re-install your memory upgrade module. *(See Memory Upgrade Module on page 45 for more information)*
	You have a memory failure.	Check for Power On Self Test (POST) messages. *(See Power On Self Test Messages on page 64 for more information)*
Modem Problems		
Messages about modem operation.	Messages about modem operation are generated by whichever modem application is in use.	See your application software documentation for additional information.
Parallel, Serial, and USB Device Problems		
You have installed a parallel port device, a serial port device or a USB device. Your LifeBook notebook does not recognize the device, or the device does not seem to work properly.	The device is not properly installed.	Remove and re-install the device. *(See Device Ports on page 50 for more information)*
	The device may have been installed while an application was running, so your notebook is not aware of its installation.	Close the application and restart your notebook.
	Your device may not have the correct software driver active.	See your software documentation and activate the correct driver.
	You may have the wrong I/O address selected for your device.	See your device documentation and software documentation to determine the required I/O address. Change the settings in the BIOS setup utility. *(See BIOS Setup Utility on page 29 for more information)*

Problem	Possible Cause	Possible Solutions
You have installed a parallel port device, a serial port device or a USB device. Your LifeBook notebook does not recognize the device, or the device does not seem to work properly. (continued)	Your device and another device are assigned the same I/O address.	Check all I/O addresses located within the BIOS setup utility and any other installed hardware or software to make sure there are no duplications.
	Parallel port is set to output only.	Check parallel port setting in the BIOS and set to bi-directional or ECP.
PC Card Problems		
A card inserted in the PC Card slot does not work or is locking up the system.	The card is not properly installed.	Remove and re-install the card. *(See PC Cards on page 43 for more information)*
	The card may have been installed while an application was running, so your notebook is not aware of its installation.	Close the application and restart your notebook.
	Your software may not have the correct software driver active.	See your software documentation and activate the correct driver.
	You may have the wrong I/O address selected for your PC Card device.	See your PC Card documentation to determine the required I/O address. Change the settings in the BIOS. *(See BIOS Setup Utility on page 29 for more information)*
	Your PC Card device and another device are assigned the same I/O address.	Check all I/O addresses located within the BIOS setup utility and any other installed hardware or software to make sure there are no duplications.
Power Failures		
You turn on your LifeBook notebook and nothing seems to happen.	The installed primary battery is completely discharged, there is no optional second battery installed or there is no Power adapter (AC or Auto/Airline) installed.	Check the Status Indicator Panel to determine the presence and condition of the batteries. *(See Status Indicator Panel on page 11 for more information)* Install a charged battery or a Power adapter.
	The primary battery is installed but is faulty.	Use the Status Indicator panel to verify the presence and condition of the batteries. *(See Status Indicator Panel on page 11 for more information)* If a battery is indicating a short, remove that battery and operate from another power source or replace that battery.
	The battery or batteries are low.	Check the Status Indicator Panel to determine the presence and condition of the batteries. *(See Status Indicator Panel on page 11 for more information)* Use a Power adapter to operate until a battery is charged or install a charged battery.
	The power adapter (AC or auto/airline) is not plugged in properly.	Verify that your adapter is connected correctly. *(See Power Sources on page 27 for more information)*

Problem	Possible Cause	Possible Solutions
You turn on your LifeBook notebook and nothing seems to happen. (continued)	The Power adapter (AC or auto/airline) has no power from the AC outlet, airplane seat jack, or the car's cigarette lighter.	Move the AC cord to a different outlet, check for a line switch or tripped circuit breaker for the AC outlet. If you are using an auto/airline adapter in a car make sure the ignition switch is in the On or Accessories position.
	The Power adapter (AC or auto/airline) is faulty.	Try a different Power adapter or install a charged optional second battery.
Your LifeBook notebook turns off all by itself.	The power management parameters are set for auto timeouts which are too short for your operating needs.	Press any button on the keyboard, or move the mouse to restore operation. If that fails, push the Power/Suspend/Resume button. Check your power management settings, or close your applications and go to the Power Savings menu of the setup utility to adjust the timeout values to better suit your needs.
	You are operating on battery power only and have ignored a low battery alarm until the batteries are all at the dead battery state and your machine has gone into Dead Battery Suspend mode.	Install a power adapter and then push the Power/Suspend/Resume button. *(See Power Sources on page 27 for more information)*
	You have a battery failure.	Verify the condition of the batteries using the Status Indicator panel, and replace or remove any batteries that are shorted. *(See Status Indicator Panel on page 11 for more information)*
	Your power adapter has failed or lost its power source.	Make sure the adapter is plugged in and the outlet has power.
Your LifeBook notebook will not work on battery alone.	The installed batteries are dead.	Replace the battery with a charged one or install a Power adapter.
	No batteries are installed.	Install a charged battery.
	The batteries are improperly installed.	Verify that the batteries are properly connected by re-installing them.
	Your installed batteries are faulty.	Verify the condition of the batteries using the Status Indicator panel and replace or remove any batteries that are shorted. *(See Status Indicator Panel on page 11 for more information)*
The batteries seem to discharge too quickly.	You are running an application that uses a great deal of power due to frequent hard drive access or DVD/CD-ROM access, use of a modem card or a LAN PC card.	Use both the primary battery and an optional second battery and/or use a power adapter for this application when at all possible.
	The power savings features may be disabled.	Check the power management and/or setup utility settings in the Power Savings menu and adjust according to your operating needs.
	The brightness is turned all the way up.	Turn down the brightness adjustment. The higher the brightness the more power your display uses.
	The batteries are very old.	Replace the batteries.

Problem	Possible Cause	Possible Solutions
The batteries seem to discharge too quickly. (continued	The batteries have been exposed to high temperatures.	Replace the batteries.
	The batteries are too hot or too cold.	Restore the notebook to normal operating temperature. The Charging icon on the Status Indicator panel will flash when the battery is outside its operating range.
Shutdown and Startup Problems		
The Suspend/Resume button does not work.	The Suspend/Resume button is disabled from the Advanced submenu of the Power menu of the setup utility.	Enable the button from the setup utility.
	You did not hold the button in long enough.	Hold the button longer. This may need to be a few seconds if your application is preventing the CPU from checking for button pushes.
	There may be a conflict with the application software.	Close all applications and try the button again.
The system powers up, and displays power on information, but fails to load the operating system.	The boot sequence settings of the setup utility are not compatible with your configuration.	Set the operating source by pressing the [ESC] key while the Fujitsu logo is on screen or use the [F2] key and enter the setup utility and adjust the source settings from the Boot menu. *(See BIOS Setup Utility on page 29 for more information)*
	You have a secured system requiring a password to load your operating system.	Make sure you have the right password. Enter the setup utility and verify the Security settings and modify them as accordingly. *(See BIOS Setup Utility on page 29 for more information)*
	Internal hard drive was not detected.	Use the BIOS setup utility or Primary Master submenu, located within the Main menu, to try to auto detect the internal hard drive.
An error message is displayed on the screen during the notebook (boot) sequence.	Power On Self Test (POST) has detected a problem.	See the Power On Self Test (POST) messages to determine the meaning and severity of the problem. Not all messages are errors; some are simply status indicators. *(See Power On Self Test Messages on page 64 for more information)*
Your notebook appears to change setup parameters when you start it.	BIOS setup changes were not saved when you made them and exited the BIOS setup utility returning it to previous settings.	Make sure you select **Save Changes And Exit** when exiting the BIOS setup utility.
	The BIOS CMOS hold-up battery has failed.	Contact your support representative for repairs. This is not a user serviceable part but has a normal life of 3 to 5 years.
Your system display won't turn on when the system is turned on or when the system has resumed.	The system may be password-protected.	Check the status indicator panel to verify that the Security icon is blinking. If it is blinking, enter your password.

Problem	Possible Cause	Possible Solutions
Video Problems		
The built-in display is blank when you turn on your LifeBook notebook.	Something is pushing on the Closed Cover switch.	Clear the Closed Cover switch. *(See figure 2-3 on page 6 for location)*
	The notebook is set for an external monitor only.	Pressing [F10] while holding down the [Fn] key allows you to change your selection of where to send your display video. Each time you press the combination of keys you will step to the next choice. The choices, in order are: built-in display only, external monitor only, both built-in display and external monitor.
	The angle of the display and the brightness settings are not adequate for your lighting conditions.	Move the display and the brightness control until you have adequate visibility.
	The power management time-outs may be set for very short intervals and you failed to notice the display come on and go off again.	Press any button the keyboard, or move the mouse to restore operation. If that fails, push the Power/ Suspend/Resume button. (The display may be shut off by Standy mode, Auto Suspend or Video Timeout)
The LifeBook notebook turned on with a series of beeps and your built-in display is blank.	Power On Self Test (POST) has detected a failure which does not allow the display to operate.	Contact your support representative.
The display goes blank by itself after you have been using it.	The notebook has gone into Video timeout, Standby mode, Suspend mode or Save-to-Disk mode because you have not used it for a period of time.	Press any button on the keyboard, or move the mouse to restore operation. If that fails, push the Power/Suspend/Resume button. Check your power management settings, or close your applications and go to the Power Savings menu of the setup utility to adjust the timeout values to better suit your operation needs. *(See BIOS Setup Utility on page 29 for more information)*
	The power management time-outs may be set for very short intervals and you failed to notice the display come on and go off again.	Press any button on the keyboard, or move the mouse to restore operation. If that fails, push the Power/ Suspend/Resume button. (The display may be shut off by Standby Mode, Auto Suspend or Video Timeout)
	Something is pushing on the Closed Cover switch.	Check the Closed Cover switch. *(See figure 2-3 on page 6 for location)*
Your system display won't turn on when the system is turned on or when the system has resumed.	The system may be password-protected.	Check the status indicator panel to verify that the Security icon is blinking. If it is blinking, enter your password.
The Built-in Display does not close.	A foreign object, such as a paper clip, is stuck between the display and the keyboard.	Remove all foreign objects from the keyboard.

Problem	Possible Cause	Possible Solutions
The Built-in Display has bright or dark spots.	If the spots are very tiny and few in number, this is normal for a large LCD display.	This is normal; do nothing.
	If the spots are numerous or large enough to interfere with your operation needs.	Display is faulty; contact your support representative.
The application display uses only a portion of your screen and is surrounded by a dark frame.	You are running an application that does not support 800 x 600/1024 x 768 pixel resolution display and display compression is enabled.	Display compression gives a clearer but smaller display for applications that do not support 800 x 600/1024 x 768 pixel resolution. You can fill the screen but have less resolution by changing your display compression setting, (See the Video Features submenu, located within the Advanced menu of the BIOS. *(See BIOS Setup Utility on page 29 for more information)*
The Display is dark when on battery power.	The Power Management utility default is set on low brightness to conserve power.	Press [Fn] + [F7] to increase brightness or double-click on the battery gauge and adjust Power Control under battery settings.
You have connected an external monitor and it does not display any information.	Your BIOS setup is not set to enable your external monitor.	Try toggling the video destination by pressing [Fn] and [F10] together, or check your BIOS setup and enable your external monitor. (See the Video Features submenu, located within the Advanced Menu of the BIOS. *(See BIOS Setup Utility on page 29 for more information)*
	Your external monitor is not properly installed.	Reinstall your device. *(See External Monitor Port on page 52 for more information)*
	Your operating system software is not setup with the correct software driver for that device.	Check your device and operating system documentation and activate the proper driver.
You have connected an external monitor and it does not come on.	Your external monitor is not compatible with your LifeBook notebook.	See your monitor documentation and the External Monitor Support portions of the Specifications section. *(See Specifications on page 77 for more information)*
Miscellaneous Problems		
An error message is displayed on the screen during the operation of an application.	Application software often has its own set of error message displays.	See your application manual and help displays screens for more information. Not all messages are errors some may simply be status.

POWER ON SELF TEST MESSAGES

The following is an alphabetic list of error-and-status messages that Phoenix BIOS and/or your operating system can generate and an explanation of each message. Error messages are marked with an *. If an error message is displayed that is not in this list, write it down and check your operating system documentation both on screen and in the manual. If you can find no reference to the message and its meaning is not clear, contact your support representative for assistance.

nnnn Cache SRAM Passed

Where nnnn is the amount of system cache in kilobytes success-fully tested by the Power On Self Test. (This can only appear if you have an SRAM PC Card installed.)

***Diskette drive A error or Diskette drive B error**

Drive A: or B: is present but fails the BIOS Power On Self Test diskette tests. Check to see that the drive is defined with the proper diskette type in the Setup Utility, *(See BIOS Setup Utility on page 29 for more information)* and that the diskette drive is installed correctly. If the disk drive is properly defined and installed, avoid using it and contact your support representative.

***Extended RAM Failed at offset: nnnn**

Extended memory not working or not configured properly. If you have an installed memory upgrade module, verify that the module is properly installed. If it is properly installed, you may want to check your Windows Setup to be sure it is not using unavailable memory until you can contact your support representative.

nnnn Extended RAM Passed

Where nnnn is the amount of memory in kilobytes successfully tested.

***Failing Bits: nnnn The hex number nnnn**

This is a map of the bits at the memory address (in System, Extended, or Shadow memory) which failed the memory test. Each 1 (one) in the map indicates a failed bit. This is a serious fault that may cause you to lose data if you continue. Contact your support representative.

***Fixed Disk x Failure or Fixed Disk Controller Failure (where x = 1-4)**

The fixed disk is not working or not configured properly. This may mean that the hard drive type identified in your setup utility does not agree with the type detected by the Power On Self Test. Run the setup utility to check for the hard drive type settings and correct them if necessary. If the settings are OK and the message appears when you restart the system, there may be a serious fault which might cause you to lose data if you continue. Contact your support representative.

***Incorrect Drive A type – run SETUP**

Type of floppy drive A: not correctly identified in Setup. This means that the floppy disk drive type identified in your setup utility does not agree with the type detected by the Power On Self Test. Run the setup utility to correct the inconsistency.

***Incorrect Drive B type – run SETUP**

Type of floppy drive B: not correctly identified in Setup. This means that the floppy disk drive type identified in your setup utility does not agree with the type detected by the Power On Self Test. Run the setup utility to correct the inconsistency.

***Invalid NVRAM media type**

Problem with NVRAM access. In the unlikely case that you see this message you may have some display problems. You can continue operating but should contact your support representative for more information.

***Keyboard controller error**

The keyboard controller test failed. You may have to replace your keyboard or keyboard controller but may be able to use an external keyboard until then. Contact your support representative.

***Keyboard error**

Keyboard not working. You may have to replace your keyboard or keyboard controller but may be able to use an external keyboard until then. Contact your support representative.

***Keyboard error nn**

BIOS discovered a stuck key and displays the scan code for the stuck key. You may have to replace your keyboard but may be able to use an external keyboard until then. Contact your support representative.

***Monitor type does not match CMOS – Run SETUP**

Monitor type not correctly identified in Setup. This error probably means your BIOS is corrupted, run the setup utility and set all settings to the default conditions. If you still get this error, contact your support representative.

***Operating system not found**

Operating system cannot be located on either drive A: or drive C: Enter the setup utility and see if both the fixed disk, and drive A: are properly identified and that the boot sequence is set correctly. Unless you have changed your installation greatly, the operating system should be on drive C:. If the setup utility is correctly set, your hard drive may be corrupted.

***Parity Check 1 nnnn**

Parity error found in the system bus. BIOS attempts to locate the address and display it on the screen. If it cannot locate the address, it displays ????. This is a potentially data destroying failure. Contact your support representative.

***Parity Check 2 nnnn**
Parity error found in the I/O bus. BIOS attempts to locate the address and display it on the screen. If it cannot locate the address, it displays ????. This is a potentially data-destroying failure. Contact your support representative.

***Press <F1> to resume, <F2> to SETUP**
Displayed after any recoverable error message. Press the [F1] key to continue the boot process or the [F2] key to enter Setup and change any settings.

***Previous boot incomplete – Default configuration used**
Previous Power On Self Test did not complete successfully. The Power On Self Test will load default values and offer to run Setup. If the previous failure was caused by incorrect values and they are not corrected, the next boot will likely fail also. If using the default settings does not allow you to complete a successful boot sequence, you should turn off the power and contact your support representative.

***Real time clock error**
Real-time clock fails BIOS test. May require board repair. Contact your support representative.

***Shadow RAM Failed at offset: nnnn**
Shadow RAM failed at offset nnnn of the 64k block at which the error was detected. You are risking data corruption if you continue. Contact your support representative.

nnnn Shadow RAM Passed
Where nnnn is the amount of shadow RAM in kilobytes successfully tested.

***System battery is dead – Replace and run SETUP**
The BIOS CMOS RAM memory hold up battery is dead. This is part of your BIOS and is a board mounted battery which requires a support representative to change. You can continue operating but you will have to use setup utility default values or reconfigure your setup utility every time you turn off your notebook. This battery has an expected life of 2 to 3 years.

System BIOS shadowed
System BIOS copied to shadow RAM.

***System CMOS checksum bad – run SETUP**
BIOS CMOS RAM has been corrupted or modified incorrectly, perhaps by an application program that changes data stored in BIOS memory. Run Setup and reconfigure the system.

***System RAM Failed at offset: nnnn**
System memory failed at offset nnnn of in the 64k block at which the error was detected. This means that there is a fault in your built-in memory. If you continue to operate, you risk corrupting your data. Contact your support representative for repairs.

nnnn System RAM Passed
Where nnnn is the amount of system memory in kilobytes successfully tested.

***System timer error**
The timer test failed. The main clock that operates the computer is faulty. Requires repair of system board. Contact your support representative for repairs.

UMB upper limit segment address: nnnn
Displays the address of the upper limit of Upper Memory Blocks, indicating released segments of the BIOS memory which may be reclaimed by a virtual memory manager.

Video BIOS shadowed
Video BIOS successfully copied to shadow RAM.

EMERGENCY MEDIA PLAYER DRIVE TRAY RELEASE

If for some reason the eject button fails, you can open the DVD/CD-ROM tray with a paper clip or similar tool inserted into the eject hole in the far right side of the front of the tray. Straighten one side of a paper clip and push it gently into the hole. The tray will pop out a short distance.

MODEM RESULT CODES

The operating system and application software that is factory installed detects the modem characteristics and provides the necessary command strings to operate the modem. The internal modem operation is controlled by generic AT commands from the operating system and application software. The standard long form result codes may, in some cases, be displayed on your screen to keep you informed of the actions of your modem. The operating system and application software may suppress display of the result codes.

Examples of result codes are:

- OK
- NO CARRIER
- NO DIALTONE
- CONNECT 53000 (Connection complete at 53,000 bps.)
- ERROR
- FAX
- RING (This means an incoming call.)
- BUSY
- NO ANSWER

When using the internal modem with applications that are not factory installed refer to the application documentation.

RESTORING YOUR PRE-INSTALLED SOFTWARE

The Drivers and Applications Restore (DAR) CD contains:

- Sets of device drivers and Fujitsu utilities (in specific directories) that are unique to your LifeBook notebook configuration for use as documented below.
- A link to the Drive Image Special Edition (DISE) utility on your hard disk drive.
- Read-me files that provide additional use information for items on this CD-ROM.

If the DAR CD is in the drive when you boot up the system, a message will appear informing you that continuing to boot from the CD will overwrite all information on the hard drive, including saved files, and restore the hard drive to its factory configuration. If you wish to install drivers or applications **only** from the CD, remove the disk from the drive, reboot the system, and insert the CD after Windows has started.

If you have access to the internet, visit the Fujitsu Support web site at us.fujitsu.com/computers to check for the most current information, drivers and hints on how to perform recovery and system updates.

DRIVE IMAGE SPECIAL EDITION (DISE)

PowerQuest Drive Image Special Edition (DISE) provides a way to restore your computer if you experience a hard disk crash or other system failure. Fujitsu has used DISE to create an image of everything installed on the computer at the time you purchased it. The image is saved on a separate partition on the hard disk. You can use DISE to restore the factory image and return your computer to the state in which it was shipped from Fujitsu.

Although it is not necessary, you can use DISE to store additional image files that you create. For example, if you install several applications and save data files on your hard disk, you can create a new image file that includes them and then save that image file on the hard disk. Then, in the event of a hard disk failure, you can restore the image that includes the applications and data files you use.

Using the DISE feature will reduce the amount of usable disk space on your hard disk drive.

Creating a Backup Image

You can create a backup image of your C:\ drive at any time. The C:\ partition must be a FAT, FAT32, or NTFS partition, and it must be directly before the backup partition on your hard disk.

There are two ways to implement the DISE utility: When booting up the system, or from the desktop.

Creating a backup image when booting up

Before creating a backup image at boot-up, you must first change the boot-up priority in the BIOS so that the system will go to the CD drive first, rather than trying to boot-up from the hard drive or an external floppy disk drive.

To change the boot-up priority:

1. Start your system and press the [F2] key when the Fujitsu logo appears. You will enter the BIOS Setup Utility.
2. Using the arrow keys, go to the Boot menu.
3. Arrow down to the Boot Device Priority submenu and press [Enter].
4. Arrow down to the CD-ROM drive in the list, and press the space bar (or the + key) to move the CD-ROM drive to the top of the list. (The system attempts to boot from the devices in the order in which they are listed.)
5. Press [F10], then click on [Yes] to exit the BIOS Setup Utility and return to the boot process.

After you have changed the boot priority, you can create a backup image when you are booting up:

1. Install the DAR CD in the drive prior to booting up. When bootup begins, a message will appear informing you that continuing to boot from the CD will overwrite all information on the hard drive, including saved files, and restore the hard drive to its factory configuration.
2. When you are asked if you want to restore the factory image, click [**Y**]**es**.

Creating a backup image from the desktop

To create a backup image from the desktop, select Drive Image SE from the Program list. You will initially be prompted to create a backup diskette. It is not necessary to create the backup diskette, since the DAR CD performs the same function.

1. At the Drive Image Special Edition main screen, click **Options**> **Create New Backup.** DISE displays a warning that it must go to DOS to create the image.
3. Click **Yes.**

   DISE creates an image file in the backup partition. If you created a backup image previously, the new image overwrites the old one.

Enlarging the Backup Partition

If there is not enough unused space in the backup partition on your hard disk, DISE will resize the partition. DISE will display the minimum, maximum, and recommended sizes for the backup partition. You choose the size you want.

DISE takes the space from the FAT, FAT32, or NTFS partition that you are backing up. If there is not enough unused space in that partition to take, you will not be able to resize the backup partition and create an image file. You can delete files from the FAT, FAT32, or NTFS partition to create more unused space on the hard disk.

Restoring a Backup Image

You can restore either a factory image or a backup image you created. Be aware that restoring a backup image will replace the contents of the C:\ partition with the image you restore.

1. Disable virus protection software. If virus protection software is enabled, DISE will hang.
2. From the DISE main window, click **Options** > **Restore Backup** to restore an image you created, or click **Options** > **Restore Factory Backup** to restore the factory image.

   DISE shuts down to DOS and restores the image file.

Re-Installing Individual Drivers and Applications

The Drivers and Application CD can be used to selectively re-install drivers and/or applications that may have been un-installed or corrupted.

To re-install drivers and/or applications:

1. Boot up the system and insert the DAR CD after Windows has started. The LifeBook Easy Installation screen appears.
2. Select the drivers and applications you want to install from the list that is displayed.
3. Click [Start]. Follow the prompts that appear to complete installation of the selected drivers and/or applications.

AUTOMATICALLY DOWNLOADING DRIVER UPDATES

Your system has a convenient tool called the Fujitsu Driver Update (FDU) utility. With FDU, you can choose to automatically or manually go to the Fujitsu site to check for new updates for your system.

The FDU icon should appear in the system tray at the bottom right of your screen (roll the cursor over the icons to find the correct one). If the FDU icon does not appear in the system tray, it can be started by going to [Start] -> All Programs, and clicking on Fujitsu Driver Update; this will create the icon automatically.

To invoke the FDU menu, you can either right-click on the FDU icon or hold the pen on the icon for a couple of seconds until the menu appears. The menu contains the following items:

- **Check for updates now**
  Allows for manual driver update search. The first time it is used, you are prompted to agree to a user agreement. After clicking on the icon, the FDU automatically connects with the Fujitsu site to check for updates and downloads them. While downloading, the icon has a red bar through it, indicating that it cannot be used while the download is in process. When the update is complete, a message appears informing you of the fact.
- **Enable Automatic Update Notifications**
  Automatically searches for new updates on a regular basis (approximately every 3 days).
- **Show update history**
  Brings up a screen that displays a history of updates that have been made via the FDU.
- **About Fujitsu Driver Update**
  Displays the FDU version number and copyright information
- **Fujitsu Driver Update Readme**
  Displays the FDU readme.

6

Care and Maintenance

Care and Maintenance

If you use your Fujitsu LifeBook notebook carefully, you will increase its life and reliability. This section provides some tips for looking after the notebook and its devices.

Electrical equipment may be hazardous if misused. Operations of this product or similar products, must always be supervised by an adult. Do not allow children access to the interior of any electrical products and do not permit them to handle any cables.

Caring for your LifeBook notebook

- Your LifeBook notebook is a durable but sensitive electronic device. Treat it with respect and care.
- Make a habit of transporting it in a suitable carrying case.
- Do not attempt to service the computer yourself. Always follow installation instructions closely.
- Keep it away from food and beverages.
- If you accidentally spill liquid on your LifeBook notebook:
  1. Turn it off.
  2. Position it so that the liquid can run out.
  3. Let it dry out for 24 hours, or longer if needed.
  4. If your notebook will not boot after it has dried out, call your support representative.
- Do not use your Fujitsu LifeBook notebook in a wet environment (near a bathtub, swimming pool).
- Always use the AC adapter and batteries that are approved for your notebook.
- Avoid exposure to sand, dust and other environmental hazards.
- Do not expose your notebook to direct sunlight for long periods of time as temperatures above 140° F (60° C) may damage your notebook.
- Keep the covers closed on the connectors and slots when they are not in use.
- Do not put heavy or sharp objects on the computer.
- If you are carrying your LifeBook notebook in a briefcase, or any other carrying case, make sure that there are no objects in the case pressing on the lid.
- Never position your notebook such that the optical drive is supporting the weight of the notebook.
- Do not drop your notebook.
- Do not touch the screen with any sharp objects.

Cleaning your LifeBook notebook

- Always disconnect the power plug. (Pull the plug, not the cord.)
- Clean your LifeBook notebook with a damp, lint-free cloth. Do not use abrasives or solvents.
- Use a soft cloth to remove dust from the screen. Never use glass cleaners.

Storing your LifeBook notebook

- If storing your notebook for a month or longer, turn your LifeBook notebook off, fully charge the battery(s), then remove and store all Lithium ion batteries.
- Store your notebook and batteries separately. If you store your LifeBook with a battery installed, the battery will discharge, and battery life will be reduced. In addition, a faulty battery might damage your LifeBook.
- Store your Fujitsu LifeBook in a cool, dry location. Temperatures should remain between 13ºF (-25ºC) and 140ºF (60ºC).

Traveling with your LifeBook notebook

- Do not transport your notebook while it is turned on.
- It is recommended that you carry your notebook with you while travelling, rather than checking it in as baggage.
- Always bring your System Recovery CD that came with your notebook when you travel. If you experience system software problems while traveling, you may need it to correct any problems.
- Never put your notebook through a metal detector. Have your notebook hand-inspected by security personnel. You can however, put your notebook through a properly tuned X-ray machine. To avoid problems, place your notebook close to the entrance of the machine and remove it as soon as possible or have your notebook hand-inspected by security personnel. Security officials may require you to turn your notebook On. Make sure you have a charged battery on hand.
- When traveling with the hard drive removed, wrap the drive in a non-conducting materials (cloth or paper). If you have the drive checked by hand, be ready to install the drive if needed. Never put your hard drive through a metal detector. Have your hard drive hand-inspected by security personnel. You can however, put your hard drive through a properly tuned X-ray machine.
- Take the necessary plug adapters if you're traveling overseas. Check the following diagram to determine which plug adapter you'll need or ask your travel agent.

Outlet Type	Location
	United States, Canada, parts of Latin America, Mexico, Japan, Korea, the Philippines, Taiwan
	Russia and the Commonwealth of Independent States (CIS), most of Europe, parts of Latin America, the Middle East, parts of Africa, Hong Kong, India, most of South Asia
	United Kingdom, Ireland, Malaysia, Singapore, parts of Africa
	China, Australia, New Zealand

BATTERIES

Caring for your Batteries

- Always handle batteries carefully.
- Do not short-circuit the battery terminals (that is, do not touch both terminals with a metal object). Do not carry lose batteries in a pocket or purse where they may mix with coins, keys, or other metal objects. Doing so may cause an explosion or fire.
- Do not drop, puncture, disassemble, mutilate or incinerate the battery.
- Recharge batteries only as described in this manual and only in ventilated areas.
- Do not leave batteries in hot locations for more than a day or two. Intense heat can shorten battery life.
- Do not leave a battery in storage for longer than 6 months without recharging it.

Increasing Battery Life

- Power your LifeBook notebook through the AC or optional auto/airline adapter whenever possible.
- If your notebook is running on battery power all day, connect it to the AC adapter overnight to recharge the battery.
- Keep brightness to the lowest level comfortable.
- Set the power management for maximum battery life.
- Put your notebook in Suspend mode when it is turned on and you are not actually using it.
- Limit your media drive access.
- Disable the Media Player auto insert notification function.
- Always use fully charged batteries.
- Eject PCMCIA™ cards when not in use.

FLOPPY DISKS AND DRIVES

Caring for your Floppy Disks

- Avoid using the floppy disks in damp and dusty locations.
- Never store a floppy disk near a magnet or magnetic field.
- Do not use a pencil or an eraser on a disk or disk label.
- Avoid storing the floppy disks in extremely hot or cold locations, or in locations subject to severe temperature changes. Store at temperatures between 50° F (10°C) and 125°F (52°C).
- Do not touch the exposed part of the disk behind the metal shutter.
- Never use the floppy disk drive with any liquid, metal, or other foreign matter inside the floppy disk drive or disk.
- Never disassemble your floppy disk drive.

MEDIA CARE

Caring for your Media (DVD/CD/CD-R)

Media discs are precision devices and will function reliably if given reasonable care.

- Always store your media disc in its case when it is not in use.
- Always handle discs by the edges and avoid touching the surface.
- Avoid storing any media discs in extreme temperatures.
- Do not bend media discs or set heavy objects on them.
- Do not spill liquids on media discs.
- Do not scratch media discs.
- Do not get dust on media discs.
- Never write on the label surface with a ballpoint pen or pencil. Always use a felt pen.
- If a media disc is subjected to a sudden change in temperature, cold to warm condensation may form on the surface. Wipe the moisture off with a clean, soft, lint free cloth and let it dry at room temperature. DO NOT use a hair dryer or heater to dry media discs.
- If a disc is dirty, use only a DVD/CD cleaner or wipe it with a clean, soft, lint free cloth starting from the inner edge and wiping to the outer edge.