APPENDIX B PLOTS OF THE SAR MEASUREMENTS

Plots of the measured SAR distributions inside the phantom are given in this Appendix for the "Lap Arm Held" and "Tablet" tested configurations. The spatial peak SAR values were assessed with the procedure described in this report.

Table 22: 2450 MHz DSSS Band SAR Measurement Plot Numbers

Plot 1	Lap Arm Held Position – Ant B – Pre-scan	CH#06
Plot 2	Lap Arm Held Position – Ant A – Pre-scan	CH#06
Plot 3	Lap Arm Held Position – Ant A	CH#01
Plot 4	Lap Arm Held Position – Ant A	CH#06
Plot 5	Lap Arm Held Position – Ant A	CH#11
Z-Axis Graphs	Z-Axis graphs for Plots 3 to 5	
Plot 6	Lap Arm Held Position – Ant B	CH#01
Plot 7	Lap Arm Held Position – Ant B	CH#06
Plot 8	Lap Arm Held Position – Ant B	CH#11
Z-Axis Graphs	Z-Axis graphs for Plots 6 to 8	
Plot 9	Edge On Position – Ant A	CH#01
Plot 10	Edge On Position – Ant A	CH#06
Plot 11	Edge On Position – Ant A	CH#11
Z-Axis Graphs	Z-Axis graphs for Plots 9 – 11	
Plot 12	Edge On Position – Ant B	CH#01
Plot 13	Edge On Position – Ant B	CH#06
Plot 14	Edge On Position – Ant B	CH#11
Z-Axis Graphs	Z-Axis graphs for Plots 12 - 14	
Plot 15	Tablet Position – Ant A – Pre-scan	CH#06
	WLAN with Bluetooth On	
Plot 16	Lap Arm Held Position With Blue tooth Ant A BTCH#40	CH#11
Plot 17	Lap Arm Held Position With Blue tooth Ant B BTCH#40	CH#11
Z-axis graphs	Z-Axis graphs for Plots 16 to 17	

Table 23: 2450 MHz OFDM Band SAR Measurement Plot Numbers

This document shall not be copied or reproduced, except in full without the written permission of the Technical Director , EMC Technologies Pty. Ltd.

Plot 18	Lap Arm Held Position – Ant A	CH#06
Plot 19	Lap Arm Held Position – Ant B	CH#06
Z-Axis Graphs	Z-Axis graphs for Plot 18 to 19	

Table 24: 2450MHz Validation Plot

Plot 20	Validation 2450MHz 6th March 2006
Plot 21	Validation 2450MHz 7th March 2006
Z-Axis Graphs	Z-Axis graphs for Plots 20 & 21

This document shall not be copied or reproduced, except in full without the written permission of the Technical Director , EMC Technologies Pty. Ltd.

Test Date: 7 March 2006

File Name: Arm Held DSSS 2450 MHz Versalius Antenna Aux Bluetooth Off Prescan 07-03-06.da4

DUT: Fujitsu Tablet Versalius with Golan 11abg and Bluetooth; Type: WM3945ABG; Serial: 028CCF455CVD26533003

* Communication System: DSSS 2450 MHz; Frequency: 2437 MHz; Duty Cycle: 1:1
* Medium parameters used: σ = 1.94551 mho/m, ε_r = 51.3217; ρ = 1000 kg/m^3
- Electronics: DAE3 Sn442; Probe: ET3DV6 - SN1377; ConvF(3.99, 3.99, 3.99)
- Phantom: Flat Phantom 10.1; Serial: P 10.1; Phantom section: Flat 2.2 Section

Channel 6 Bluetooth at 2441 MHz Test/Area Scan (141x161x1): Measurement grid: dx=20mm, dy=20mm

Maximum value of SAR (interpolated) = 1.06 mW/g

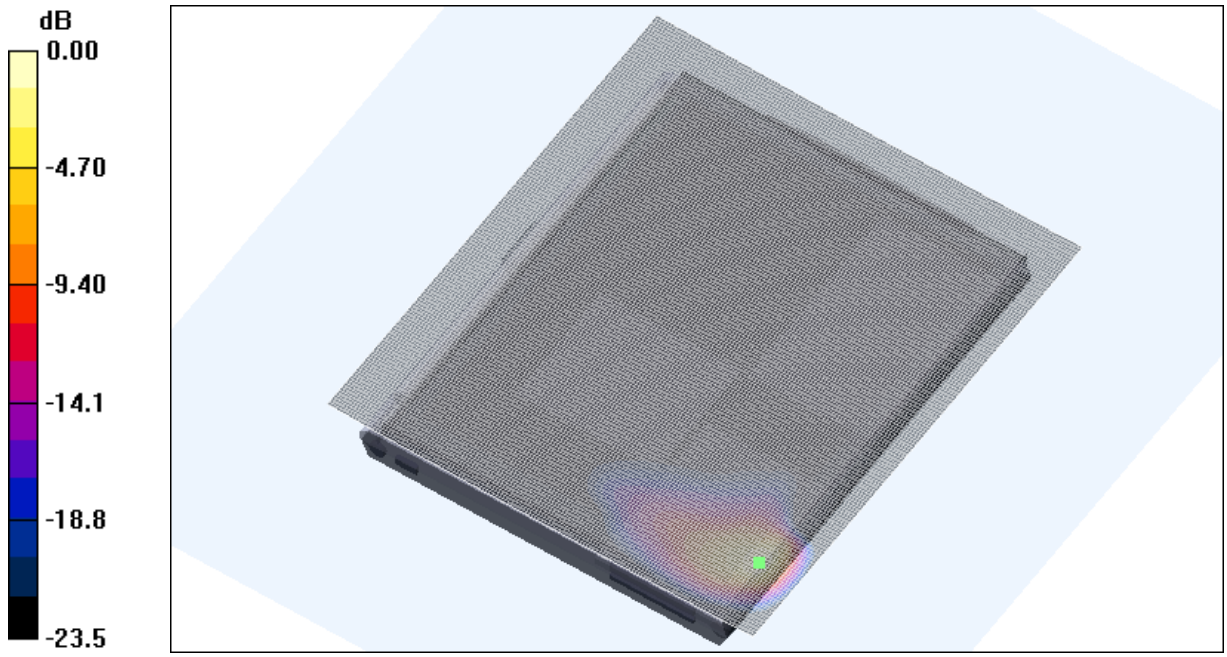

0 dB = 1.40mW/g

SAR MEASUREMENT PLOT 1

Ambient Temperature	**21.2 Degrees Celsius**
Liquid Temperature	**20.8 Degrees Celsius**
Humidity	**45.0 %**

This document shall not be copied or reproduced, except in full without the written permission of the Technical Director , EMC Technologies Pty. Ltd.

Test Date: 6 March 2006

File Name: Arm Held DSSS 2450 MHz Versalius Antenna Main Bluetooth On Prescan 06-03-06.da4

DUT: Fujitsu Tablet Versalius with Golan 11abg and Bluetooth; Type: WM3945ABG; Serial: 028CCF455CVD26533003

* Communication System: DSSS 2450 MHz; Frequency: 2437 MHz; Duty Cycle: 1:1
* Medium parameters used: σ = 1.94179 mho/m, ε_r = 52.0941; ρ = 1000 kg/m^3
- Electronics: DAE3 Sn442; Probe: ET3DV6 - SN1377; ConvF(3.99, 3.99, 3.99)
- Phantom: Flat Phantom 10.1; Serial: P 10.1; Phantom section: Flat 2.2 Section

Channel 6 Test/Area Scan (141x161x1): Measurement grid: dx=20mm, dy=20mm

Maximum value of SAR (interpolated) = 1.47 mW/g

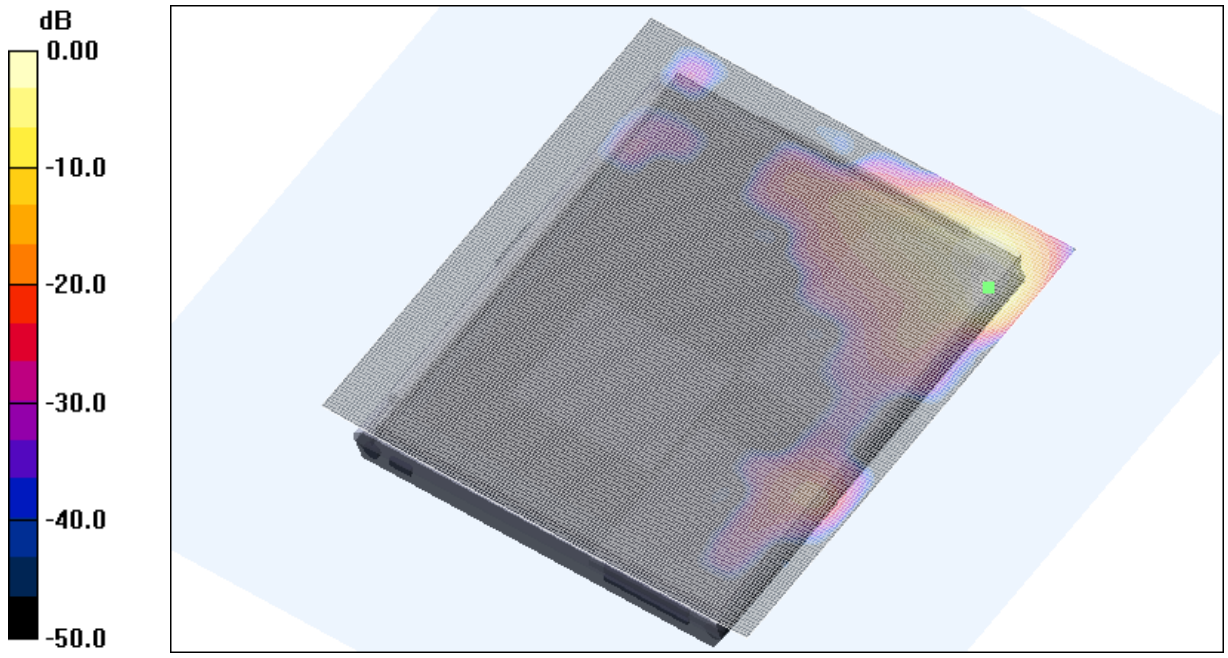

0 dB = 1.47mW/g

SAR MEASUREMENT PLOT 2

Ambient Temperature	**21.1 Degrees Celsius**
Liquid Temperature	**20.7 Degrees Celsius**
Humidity	**59.0 %**

This document shall not be copied or reproduced, except in full without the written permission of the Technical Director , EMC Technologies Pty. Ltd.

Test Date: 6 March 2006

File Name: Arm Held DSSS 2450 MHz Versalius Antenna Main Bluetooth Off 06-03-06.da4

DUT: Fujitsu Tablet Versalius with Golan 11abg and Bluetooth; Type: WM3945ABG; Serial: 028CCF455CVD26533003

* Communication System: DSSS 2450 MHz; Frequency: 2412 MHz; Duty Cycle: 1:1
* Medium parameters used: σ = 1.9081 mho/m, ε_r = 52.2262; ρ = 1000 kg/m^3
- Electronics: DAE3 Sn442; Probe: ET3DV6 - SN1377; ConvF(3.99, 3.99, 3.99)
- Phantom: Flat Phantom 10.1; Serial: P 10.1; Phantom section: Flat 2.2 Section

Channel 1 Test/Area Scan (81x101x1): Measurement grid: dx=15mm, dy=15mm
Maximum value of SAR (interpolated) = 1.24 mW/g

Channel 1 Test/Zoom Scan (7x7x7)/Cube 0: Measurement grid: dx=5mm, dy=5mm, dz=5mm
Reference Value = 21.4 V/m; Power Drift = -0.124 dB
Peak SAR (extrapolated) = 1.98 W/kg
SAR(1 g) = 0.942 mW/g; SAR(10 g) = 0.423 mW/g
Maximum value of SAR (measured) = 1.09 mW/g

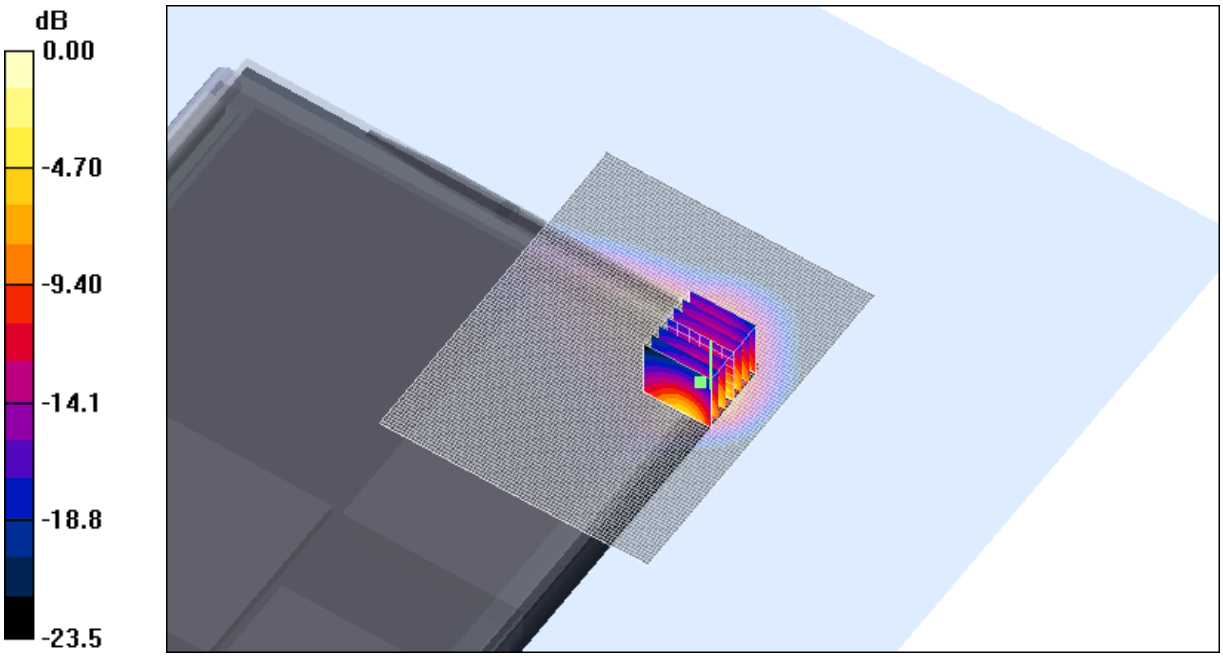

0 dB = 1.09mW/g

SAR MEASUREMENT PLOT 3

Ambient Temperature	**21.1 Degrees Celsius**
Liquid Temperature	**20.7 Degrees Celsius**
Humidity	**59.0 %**

This document shall not be copied or reproduced, except in full without the written permission of the Technical Director , EMC Technologies Pty. Ltd.

Test Date: 6 March 2006

File Name: Arm Held DSSS 2450 MHz Versalius Antenna Main Bluetooth Off 06-03-06.da4

DUT: Fujitsu Tablet Versalius with Golan 11abg and Bluetooth; Type: WM3945ABG; Serial: 028CCF455CVD26533003

* Communication System: DSSS 2450 MHz; Frequency: 2437 MHz; Duty Cycle: 1:1
* Medium parameters used: σ = 1.94179 mho/m, ε_r = 52.0941; ρ = 1000 kg/m^3
- Electronics: DAE3 Sn442; Probe: ET3DV6 - SN1377; ConvF(3.99, 3.99, 3.99)
- Phantom: Flat Phantom 10.1; Serial: P 10.1; Phantom section: Flat 2.2 Section

Channel 6 Test/Area Scan (81x101x1): Measurement grid: dx=15mm, dy=15mm
Maximum value of SAR (interpolated) = 1.60 mW/g

Channel 6 Test/Zoom Scan (7x7x7)/Cube 0: Measurement grid: dx=5mm, dy=5mm, dz=5mm
Reference Value = 21.9 V/m; Power Drift = 0.013 dB
Peak SAR (extrapolated) = 2.99 W/kg
SAR(1 g) = 1.4 mW/g; SAR(10 g) = 0.627 mW/g
Maximum value of SAR (measured) = 1.66 mW/g

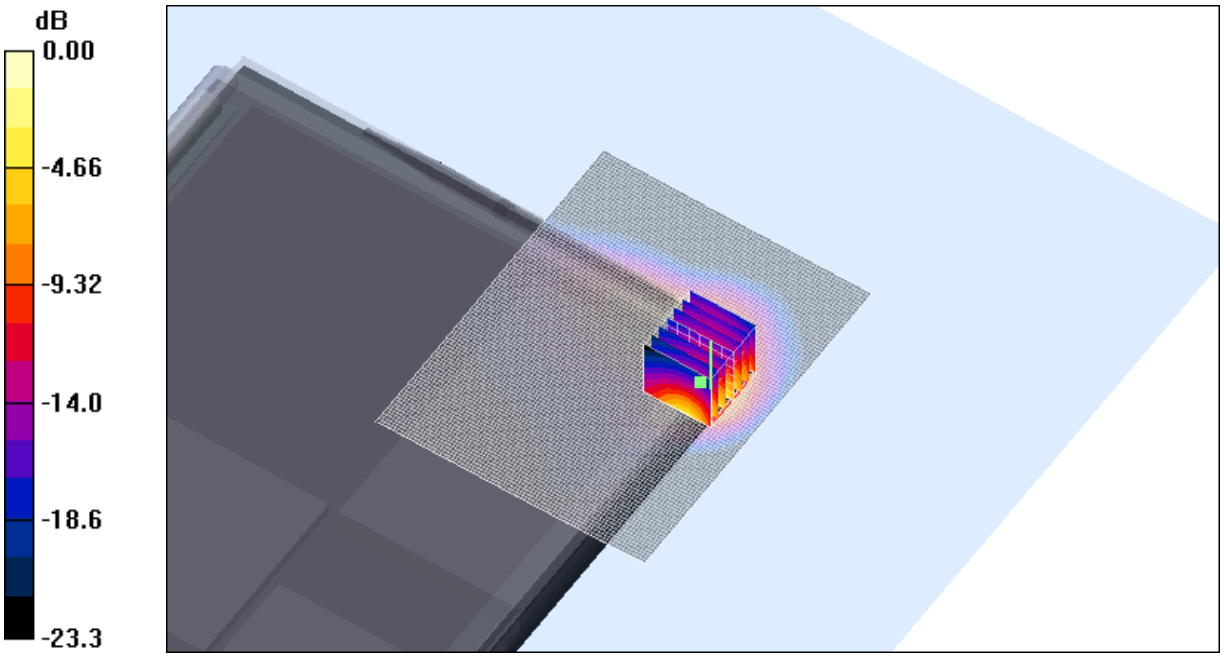

0 dB = 1.66mW/g

SAR MEASUREMENT PLOT 4

Ambient Temperature	**21.1 Degrees Celsius**
Liquid Temperature	**20.7 Degrees Celsius**
Humidity	**59.0 %**

This document shall not be copied or reproduced, except in full without the written permission of the Technical Director , EMC Technologies Pty. Ltd.

Test Date: 6 March 2006

File Name: Arm Held DSSS 2450 MHz Versalius Antenna Main Bluetooth Off 06-03-06.da4

DUT: Fujitsu Tablet Versalius with Golan 11abg and Bluetooth; Type: WM3945ABG; Serial: 028CCF455CVD26533003

* Communication System: DSSS 2450 MHz; Frequency: 2462 MHz; Duty Cycle: 1:1
* Medium parameters used: σ = 1.97735 mho/m, ε_r = 51.96; ρ = 1000 kg/m^3
- Electronics: DAE3 Sn442; Probe: ET3DV6 - SN1377; ConvF(3.99, 3.99, 3.99)
- Phantom: Flat Phantom 10.1; Serial: P 10.1; Phantom section: Flat 2.2 Section

Channel 11 Test/Area Scan (81x101x1): Measurement grid: dx=15mm, dy=15mm
Maximum value of SAR (interpolated) = 1.85 mW/g

Channel 11 Test/Zoom Scan (7x7x7)/Cube 0: Measurement grid: dx=5mm, dy=5mm, dz=5mm
Reference Value = 22.7 V/m; Power Drift = -0.162 dB
Peak SAR (extrapolated) = 3.15 W/kg
SAR(1 g) = 1.47 mW/g; SAR(10 g) = 0.654 mW/g
Maximum value of SAR (measured) = 1.64 mW/g

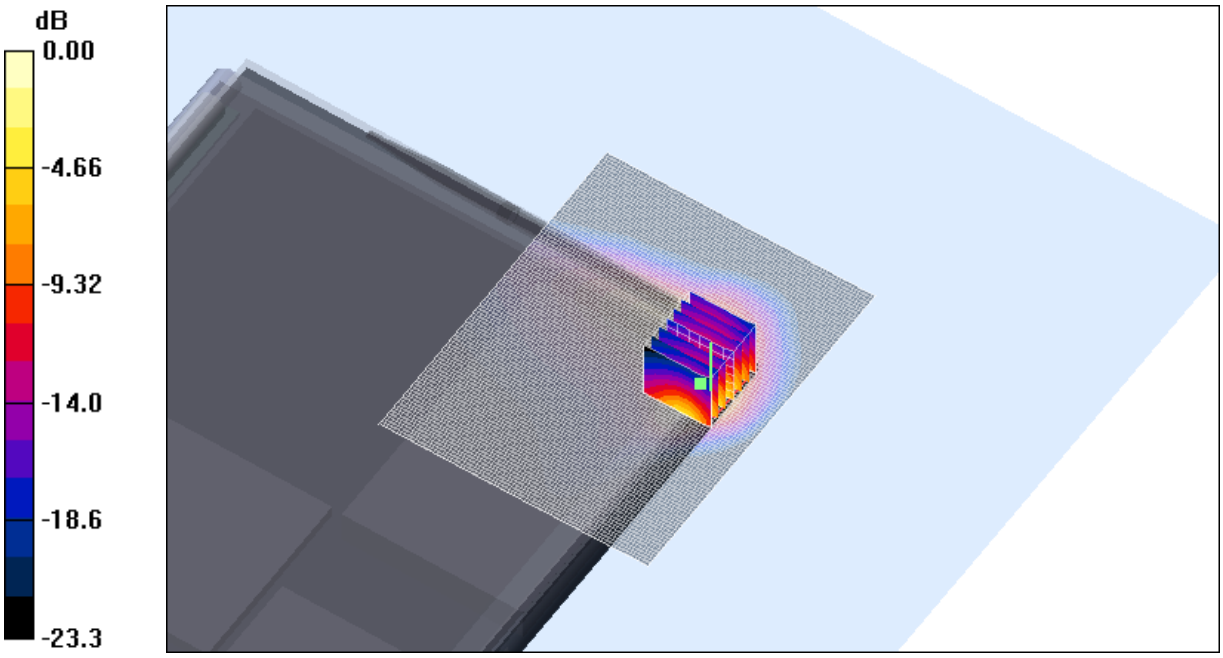

0 dB = 1.64mW/g

SAR MEASUREMENT PLOT 5

Ambient Temperature	**21.1 Degrees Celsius**
Liquid Temperature	**20.7 Degrees Celsius**
Humidity	**59.0 %**

This document shall not be copied or reproduced, except in full without the written permission of the Technical Director , EMC Technologies Pty. Ltd.

Z-Axis graph for Plot 3

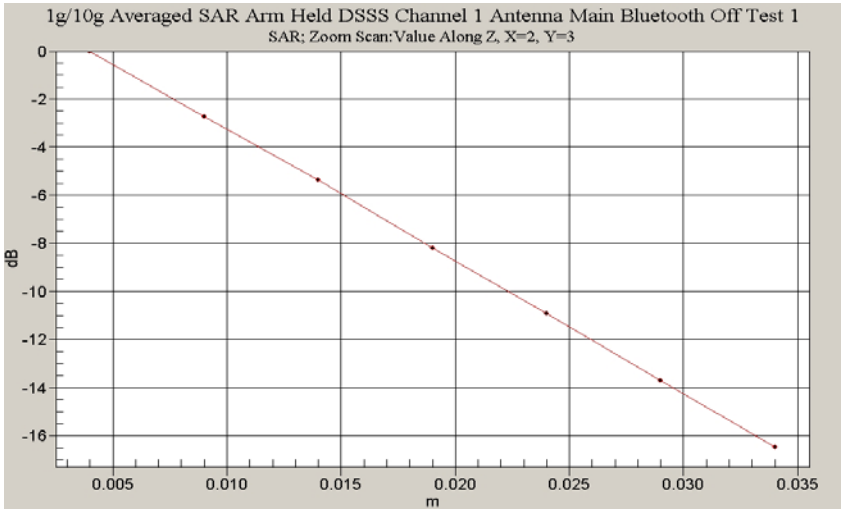

Z-Axis graph for Plot 4

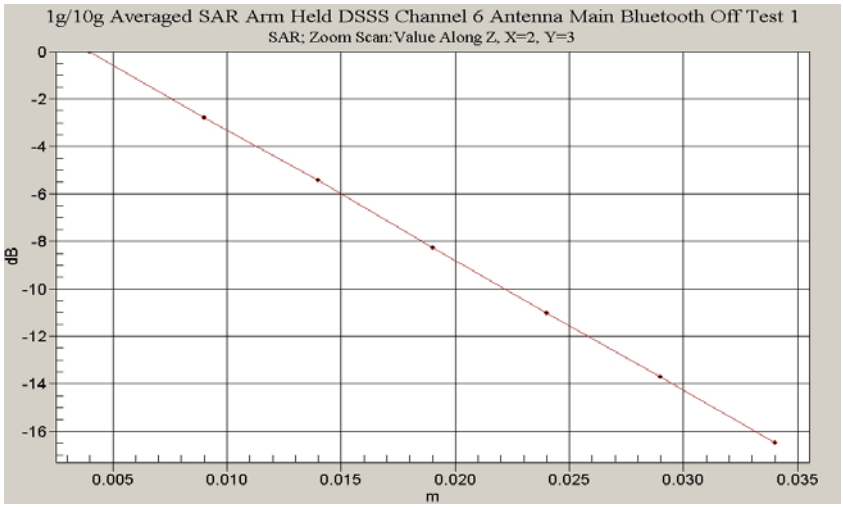

Z-Axis graph for Plot 5

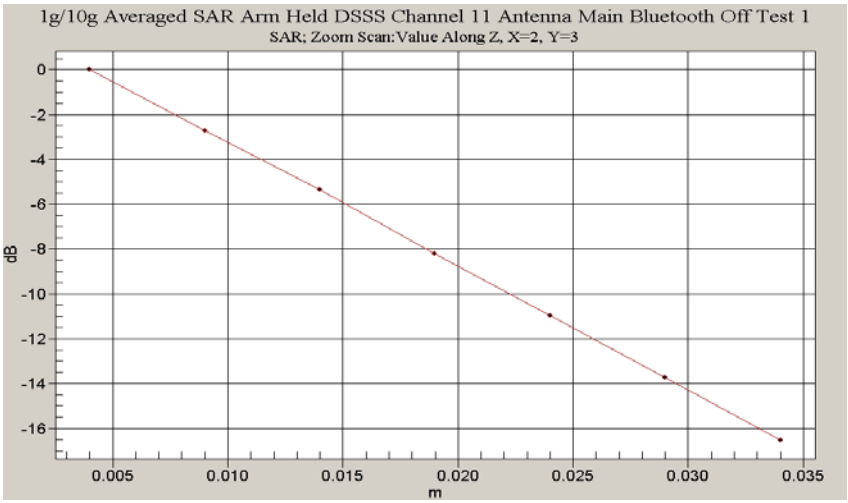

This document shall not be copied or reproduced, except in full without the written permission of the Technical Director , EMC Technologies Pty. Ltd.

Test Date: 7 March 2006

File Name: Arm Held DSSS 2450 MHz Versalius Antenna Aux Bluetooth Off 07-03-06.da4

DUT: Fujitsu Tablet Versalius with Golan 11abg and Bluetooth; Type: WM3945ABG; Serial: 028CCF455CVD26533003

* Communication System: DSSS 2450 MHz; Frequency: 2412 MHz; Duty Cycle: 1:1
* Medium parameters used: σ = 1.90211 mho/m, ε_r = 51.4735; ρ = 1000 kg/m^3
- Electronics: DAE3 Sn442; Probe: ET3DV6 - SN1377; ConvF(3.99, 3.99, 3.99)
- Phantom: Flat Phantom 10.1; Serial: P 10.1; Phantom section: Flat 2.2 Section

Channel 1 Test/Area Scan (81x101x1): Measurement grid: dx=15mm, dy=15mm
Maximum value of SAR (interpolated) = 1.27 mW/g

Channel 1 Test/Zoom Scan (7x7x7)/Cube 0: Measurement grid: dx=5mm, dy=5mm, dz=5mm
Reference Value = 18.0 V/m; Power Drift = 0.031 dB
Peak SAR (extrapolated) = 2.27 W/kg
SAR(1 g) = 0.963 mW/g; SAR(10 g) = 0.401 mW/g
Maximum value of SAR (measured) = 1.08 mW/g

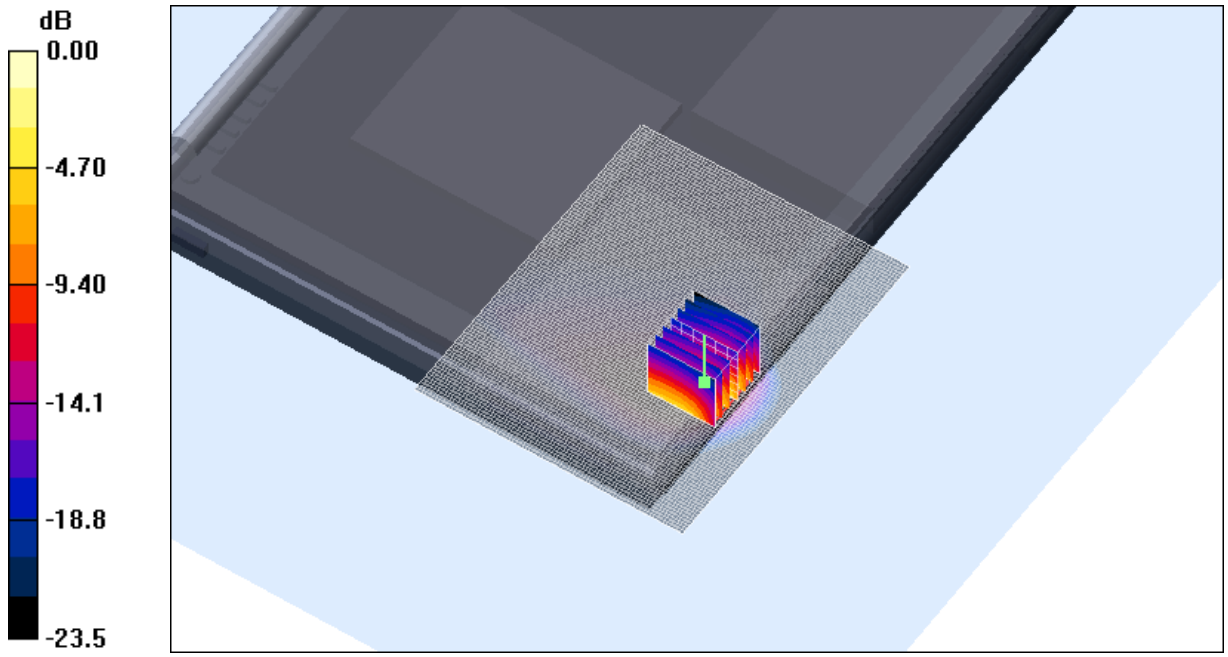

0 dB = 1.08mW/g

SAR MEASUREMENT PLOT 6

Ambient Temperature	**21.2 Degrees Celsius**
Liquid Temperature	**20.8 Degrees Celsius**
Humidity	**45.0 %**

This document shall not be copied or reproduced, except in full without the written permission of the Technical Director , EMC Technologies Pty. Ltd.

Test Date: 6 March 2006

File Name: Arm Held DSSS 2450 MHz Versalius Antenna Aux Bluetooth Off 06-03-06.da4

DUT: Fujitsu Tablet Versalius with Golan 11abg and Bluetooth; Type: WM3945ABG; Serial: 028CCF455CVD26533003

* Communication System: DSSS 2450 MHz; Frequency: 2437 MHz; Duty Cycle: 1:1
* Medium parameters used: σ = 1.94179 mho/m, ε_r = 52.0941; ρ = 1000 kg/m^3
- Electronics: DAE3 Sn442; Probe: ET3DV6 - SN1377; ConvF(3.99, 3.99, 3.99)
- Phantom: Flat Phantom 10.1; Serial: P 10.1; Phantom section: Flat 2.2 Section

Channel 6 Test/Area Scan (81x101x1): Measurement grid: dx=15mm, dy=15mm
Maximum value of SAR (interpolated) = 1.64 mW/g

Channel 6 Test/Zoom Scan (7x7x7)/Cube 0: Measurement grid: dx=5mm, dy=5mm, dz=5mm
Reference Value = 20.4 V/m; Power Drift = -0.146 dB
Peak SAR (extrapolated) = 3.15 W/kg
SAR(1 g) = 1.33 mW/g; SAR(10 g) = 0.554 mW/g
Maximum value of SAR (measured) = 1.47 mW/g

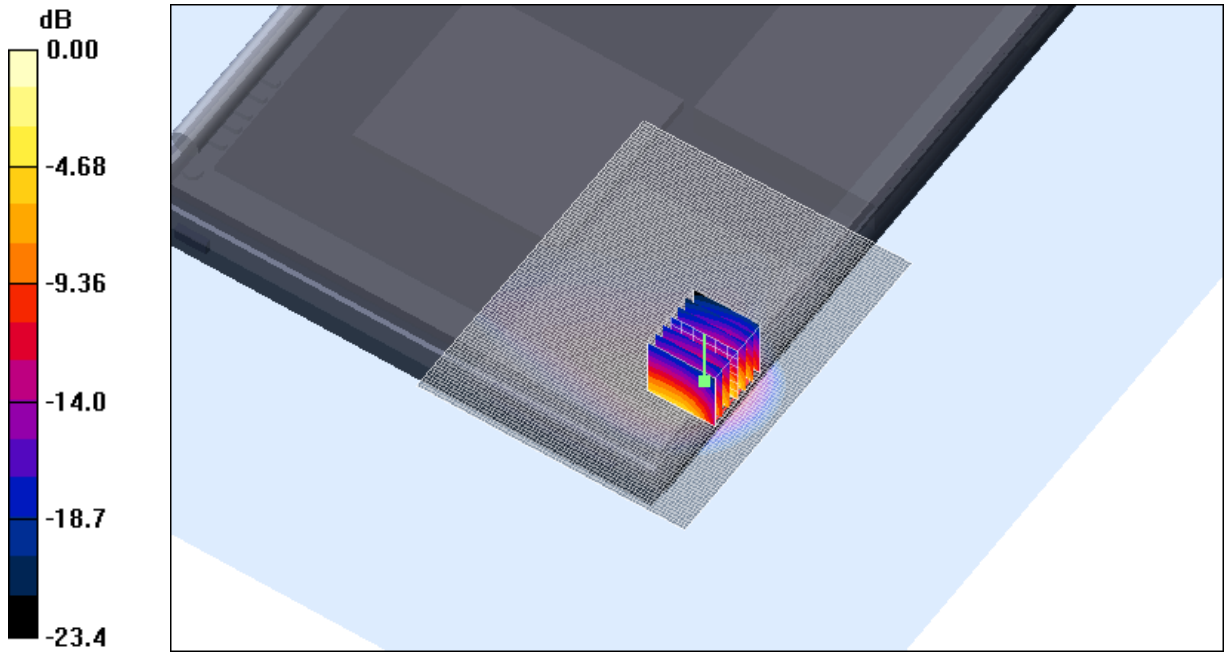

0 dB = 1.47mW/g

SAR MEASUREMENT PLOT 7

Ambient Temperature	**21.1 Degrees Celsius**
Liquid Temperature	**20.7 Degrees Celsius**
Humidity	**59.0 %**

This document shall not be copied or reproduced, except in full without the written permission of the Technical Director , EMC Technologies Pty. Ltd.

Test Date: 6 March 2006

File Name: Arm Held DSSS 2450 MHz Versalius Antenna Aux Bluetooth Off 06-03-06.da4

DUT: Fujitsu Tablet Versalius with Golan 11abg and Bluetooth; Type: WM3945ABG; Serial: 028CCF455CVD26533003

* Communication System: DSSS 2450 MHz; Frequency: 2462 MHz; Duty Cycle: 1:1
* Medium parameters used: σ = 1.97735 mho/m, ε_r = 51.96; ρ = 1000 kg/m^3
- Electronics: DAE3 Sn442; Probe: ET3DV6 - SN1377; ConvF(3.99, 3.99, 3.99)
- Phantom: Flat Phantom 10.1; Serial: P 10.1; Phantom section: Flat 2.2 Section

Channel 11 Test/Area Scan (81x101x1): Measurement grid: dx=15mm, dy=15mm
Maximum value of SAR (interpolated) = 1.93 mW/g

Channel 11 Test/Zoom Scan (7x7x7)/Cube 0: Measurement grid: dx=5mm, dy=5mm, dz=5mm
Reference Value = 20.7 V/m; Power Drift = -0.118 dB
Peak SAR (extrapolated) = 3.57 W/kg
SAR(1 g) = 1.49 mW/g; SAR(10 g) = 0.615 mW/g
Maximum value of SAR (measured) = 1.74 mW/g

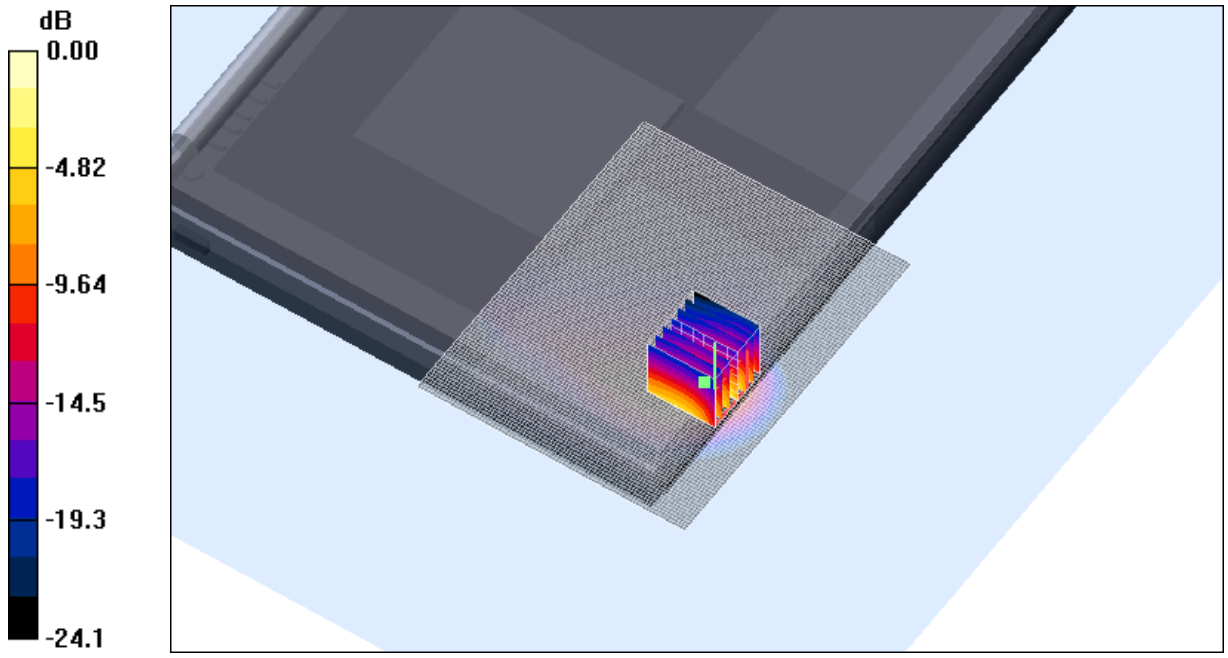

0 dB = 1.74mW/g

SAR MEASUREMENT PLOT 8

Ambient Temperature	**21.1 Degrees Celsius**
Liquid Temperature	**20.7 Degrees Celsius**
Humidity	**59.0 %**

This document shall not be copied or reproduced, except in full without the written permission of the Technical Director , EMC Technologies Pty. Ltd.

Z-Axis graph for Plot 6

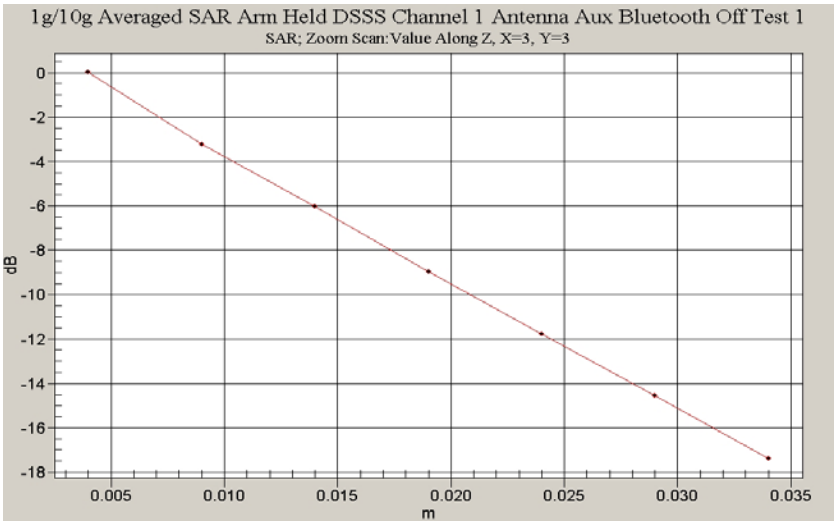

Z-Axis graph for Plot 7

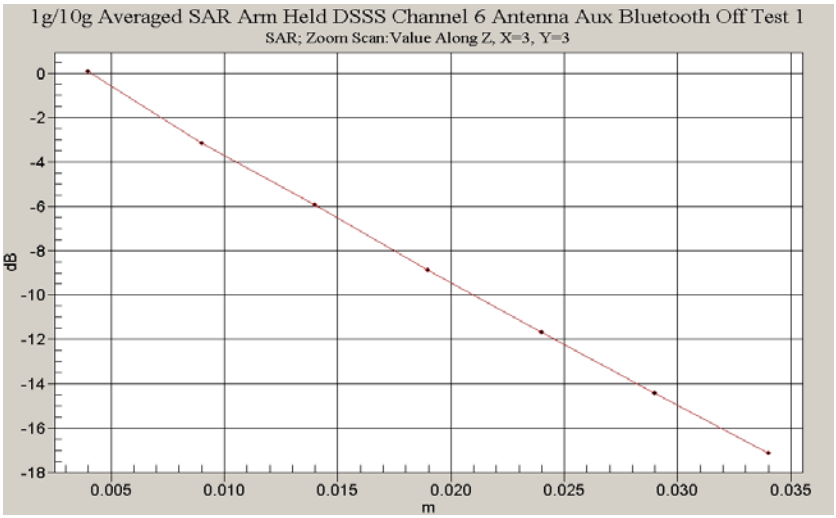

Z-Axis graph for Plot 8

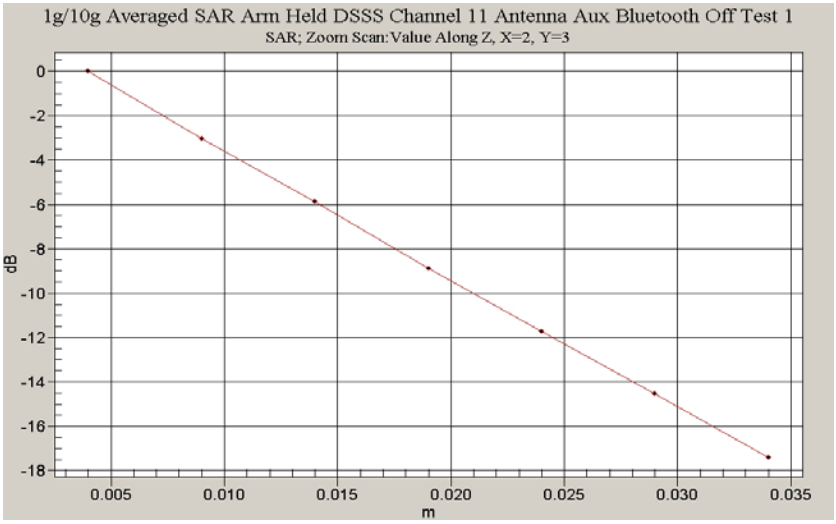

This document shall not be copied or reproduced, except in full without the written permission of the Technical Director , EMC Technologies Pty. Ltd.

Test Date: 6 March 2006

File Name: Edge On DSSS 2450 MHz Versalius Antenna Main Bluetooth Off 06-03-06.da4

DUT: Fujitsu Tablet Versalius with Golan 11abg and Bluetooth; Type: WM3945ABG; Serial: 028CCF455CVD26533003

* Communication System: DSSS 2450 MHz; Frequency: 2412 MHz; Duty Cycle: 1:1
* Medium parameters used: σ = 1.9081 mho/m, ε_r = 52.2262; ρ = 1000 kg/m^3
- Electronics: DAE3 Sn442; Probe: ET3DV6 - SN1377; ConvF(3.99, 3.99, 3.99)
- Phantom: Flat Phantom 10.1; Serial: P 10.1; Phantom section: Flat 2.2 Section

Channel 1 Test/Area Scan (81x101x1): Measurement grid: dx=15mm, dy=15mm
Maximum value of SAR (interpolated) = 0.960 mW/g

Channel 1 Test/Zoom Scan (7x7x7)/Cube 0: Measurement grid: dx=5mm, dy=5mm, dz=5mm
Reference Value = 19.0 V/m; Power Drift = 0.050 dB
Peak SAR (extrapolated) = 1.82 W/kg
SAR(1 g) = 0.856 mW/g; SAR(10 g) = 0.368 mW/g
Maximum value of SAR (measured) = 1.01 mW/g

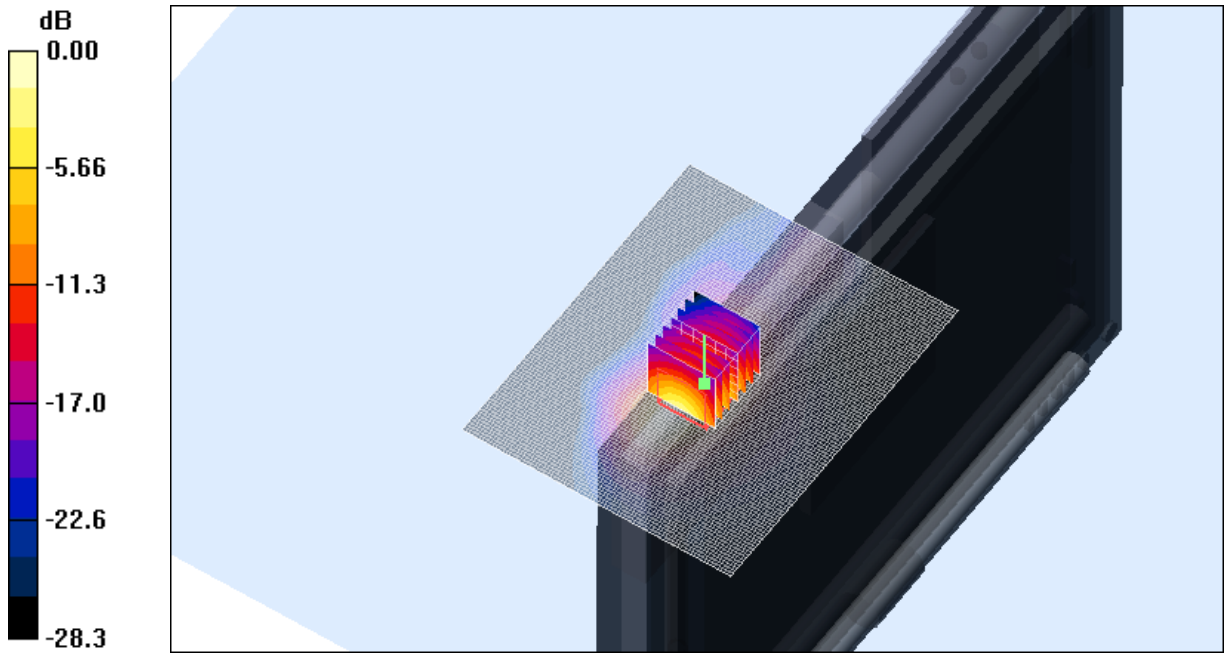

0 dB = 1.01mW/g

SAR MEASUREMENT PLOT 9

Ambient Temperature	**21.1 Degrees Celsius**
Liquid Temperature	**20.7 Degrees Celsius**
Humidity	**59.0 %**

This document shall not be copied or reproduced, except in full without the written permission of the Technical Director , EMC Technologies Pty. Ltd.

Test Date: 6 March 2006

File Name: Edge On DSSS 2450 MHz Versalius Antenna Main Bluetooth Off 06-03-06.da4

DUT: Fujitsu Tablet Versalius with Golan 11abg and Bluetooth; Type: WM3945ABG; Serial: 028CCF455CVD26533003

* Communication System: DSSS 2450 MHz; Frequency: 2437 MHz; Duty Cycle: 1:1
* Medium parameters used: σ = 1.94179 mho/m, ε_r = 52.0941; ρ = 1000 kg/m^3
- Electronics: DAE3 Sn442; Probe: ET3DV6 - SN1377; ConvF(3.99, 3.99, 3.99)
- Phantom: Flat Phantom 10.1; Serial: P 10.1; Phantom section: Flat 2.2 Section

Channel 6 Test/Area Scan (81x101x1): Measurement grid: dx=15mm, dy=15mm

Maximum value of SAR (interpolated) = 1.40 mW/g

Channel 6 Test/Zoom Scan (7x7x7)/Cube 0: Measurement grid: dx=5mm, dy=5mm, dz=5mm

Reference Value = 23.4 V/m; Power Drift = -0.229 dB

Peak SAR (extrapolated) = 2.78 W/kg

SAR(1 g) = 1.29 mW/g; SAR(10 g) = 0.552 mW/g

Maximum value of SAR (measured) = 1.52 mW/g

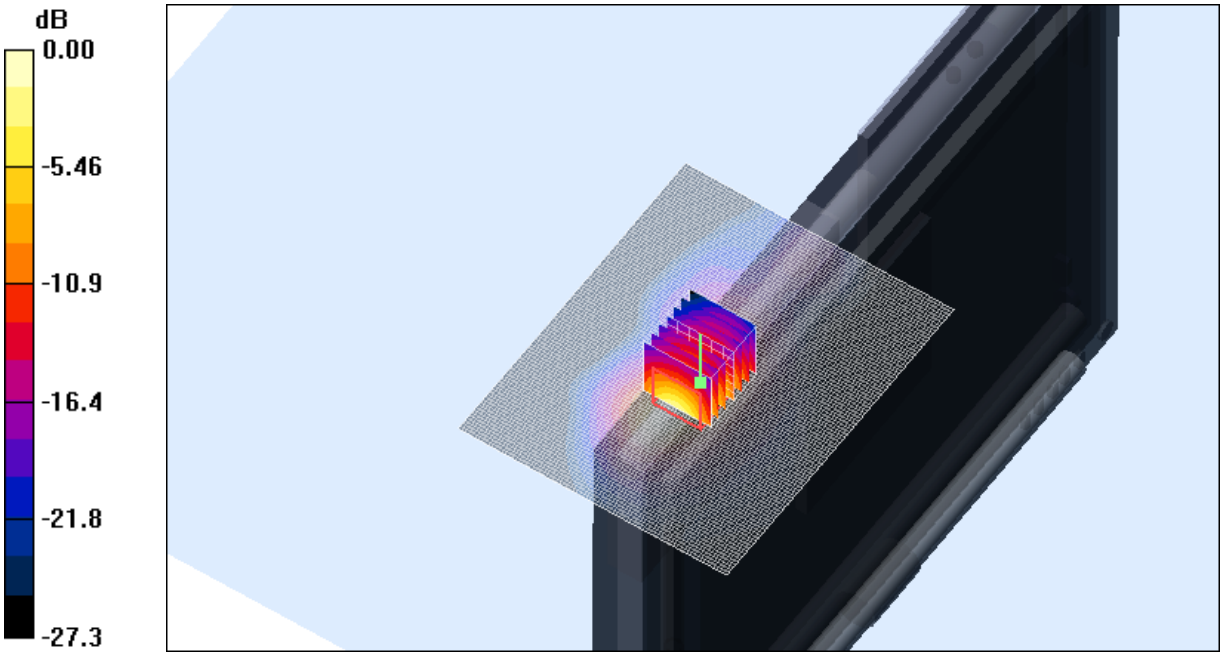

0 dB = 1.52mW/g

SAR MEASUREMENT PLOT 10

Ambient Temperature	**21.1 Degrees Celsius**
Liquid Temperature	**20.7 Degrees Celsius**
Humidity	**59.0 %**

This document shall not be copied or reproduced, except in full without the written permission of the Technical Director , EMC Technologies Pty. Ltd.

Test Date: 6 March 2006

File Name: Edge On DSSS 2450 MHz Versalius Antenna Main Bluetooth Off 06-03-06.da4

DUT: Fujitsu Tablet Versalius with Golan 11abg and Bluetooth; Type: WM3945ABG; Serial: 028CCF455CVD26533003

* Communication System: DSSS 2450 MHz; Frequency: 2462 MHz; Duty Cycle: 1:1
* Medium parameters used: σ = 1.97735 mho/m, ε_r = 51.96; ρ = 1000 kg/m^3
- Electronics: DAE3 Sn442; Probe: ET3DV6 - SN1377; ConvF(3.99, 3.99, 3.99)
- Phantom: Flat Phantom 10.1; Serial: P 10.1; Phantom section: Flat 2.2 Section

Channel 11 Test/Area Scan (81x101x1): Measurement grid: dx=15mm, dy=15mm
Maximum value of SAR (interpolated) = 1.51 mW/g

Channel 11 Test/Zoom Scan (7x7x7)/Cube 0: Measurement grid: dx=5mm, dy=5mm, dz=5mm
Reference Value = 24.3 V/m; Power Drift = -0.334 dB
Peak SAR (extrapolated) = 2.93 W/kg
SAR(1 g) = 1.36 mW/g; SAR(10 g) = 0.585 mW/g
Maximum value of SAR (measured) = 1.62 mW/g

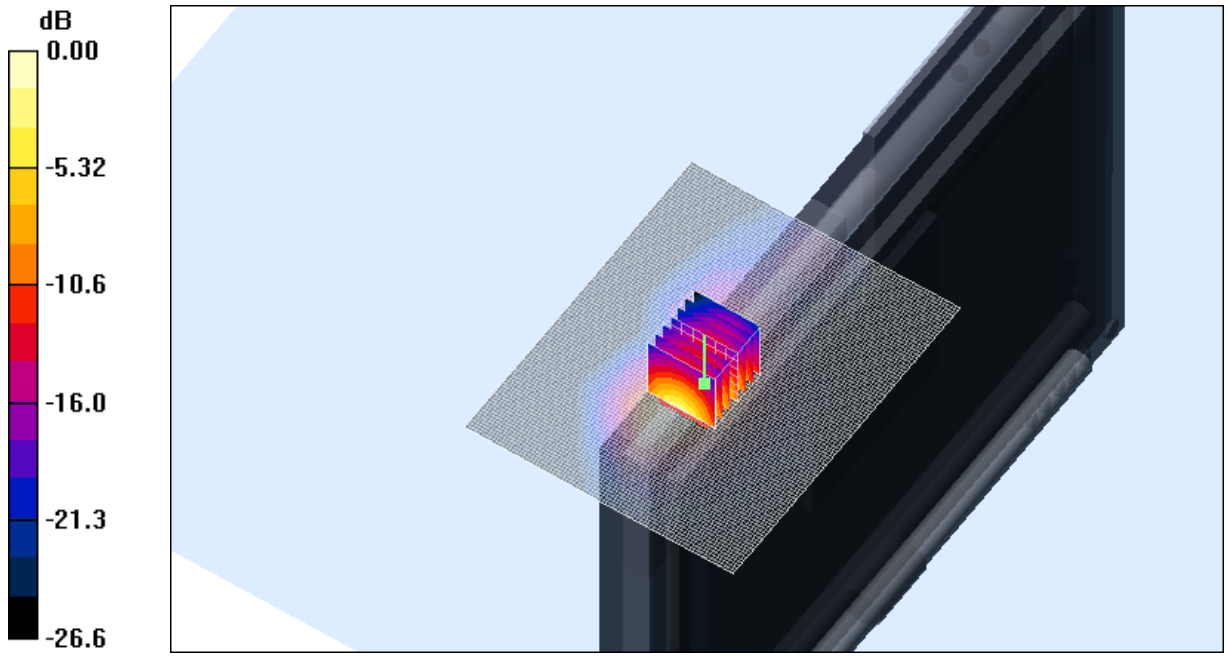

0 dB = 1.62mW/g

SAR MEASUREMENT PLOT 11

Ambient Temperature	**21.1 Degrees Celsius**
Liquid Temperature	**20.7 Degrees Celsius**
Humidity	**59.0 %**

Z-Axis graph for Plot 9

This document shall not be copied or reproduced, except in full without the written permission of the Technical Director , EMC Technologies Pty. Ltd.

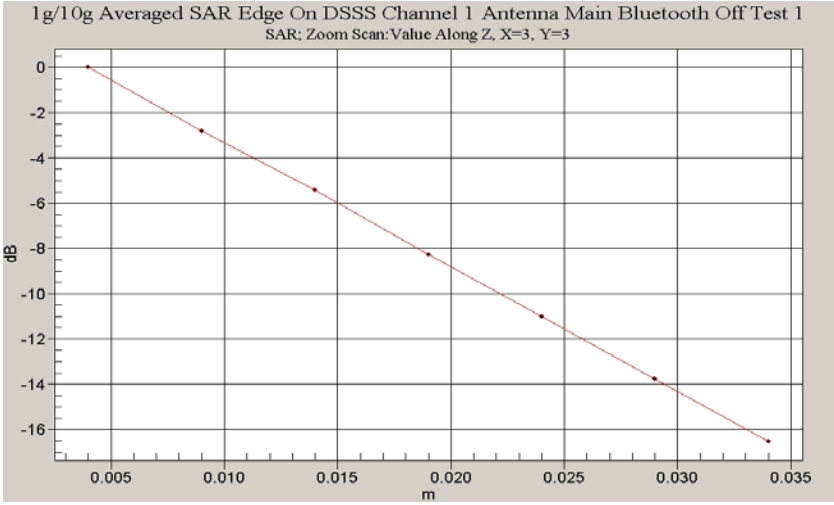

Z-Axis graph for Plot 10

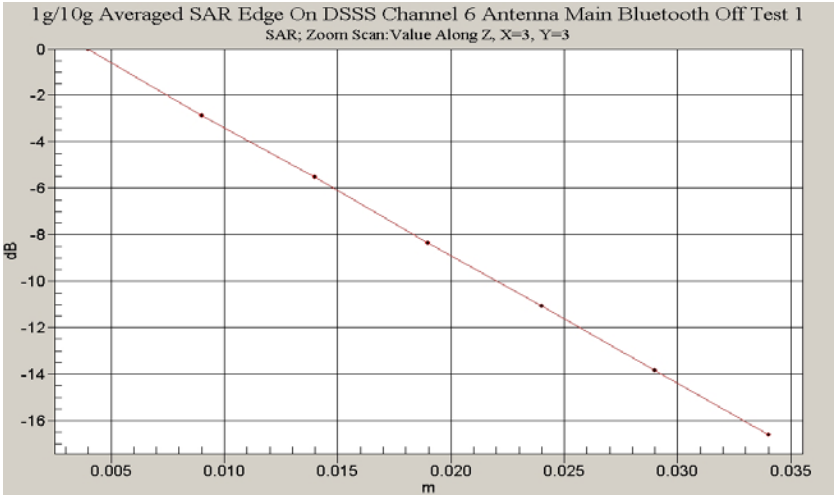

Z-Axis graph for Plot 11

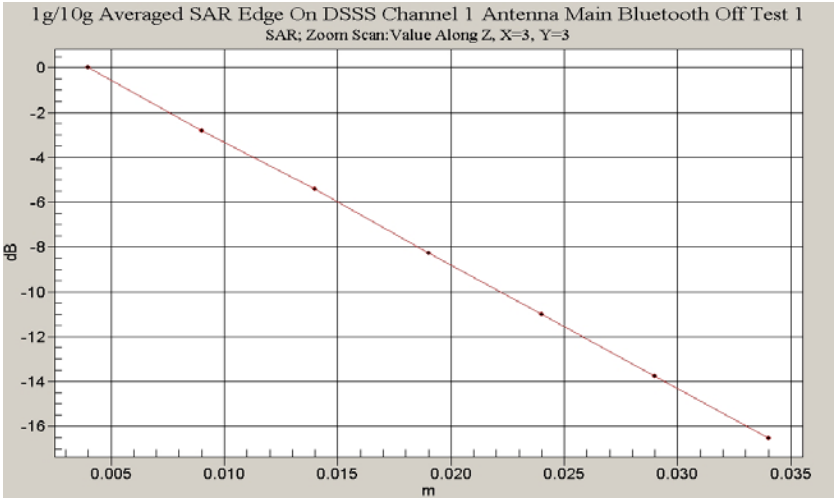

This document shall not be copied or reproduced, except in full without the written permission of the Technical Director , EMC Technologies Pty. Ltd.