Test Date: 11 September 2006
File Name: Arm Held OFDM 5.77 GHz Antenna Main Bluetooth Off 11-09-06.da4
DUT: Fujitsu Tablet Chalice with Golan 11abg and Bluetooth; Type: 3945 ABG; Serial: Host: R6700003

* Communication System: OFDM 5770 MHz; Frequency: 5745 MHz; Duty Cycle: 1:1
* Medium parameters used: σ = 6.19386 mho/m, ε_r = 44.2224; ρ = 1000 kg/m^3
- Electronics: DAE3 Sn442; Probe: EX3DV4 - SN3563; ConvF(3.64, 3.64, 3.64)
- Phantom: Flat Phantom 10.1; Serial: P 10.1; Phantom section: Flat 2.2 Section

Channel 149 Test/Area Scan (81x121x1): Measurement grid: dx=10mm, dy=10mm
Maximum value of SAR (interpolated) = 2.72 mW/g

Channel 149 Test/Zoom Scan (7x7x8)/Cube 0: Measurement grid: dx=4.3mm, dy=4.3mm, dz=3mm
Reference Value = 10.1 V/m; Power Drift = -0.169 dB
Peak SAR (extrapolated) = 5.37 W/kg
SAR(1 g) = 1.28 mW/g; SAR(10 g) = 0.395 mW/g
Maximum value of SAR (measured) = 2.63 mW/g

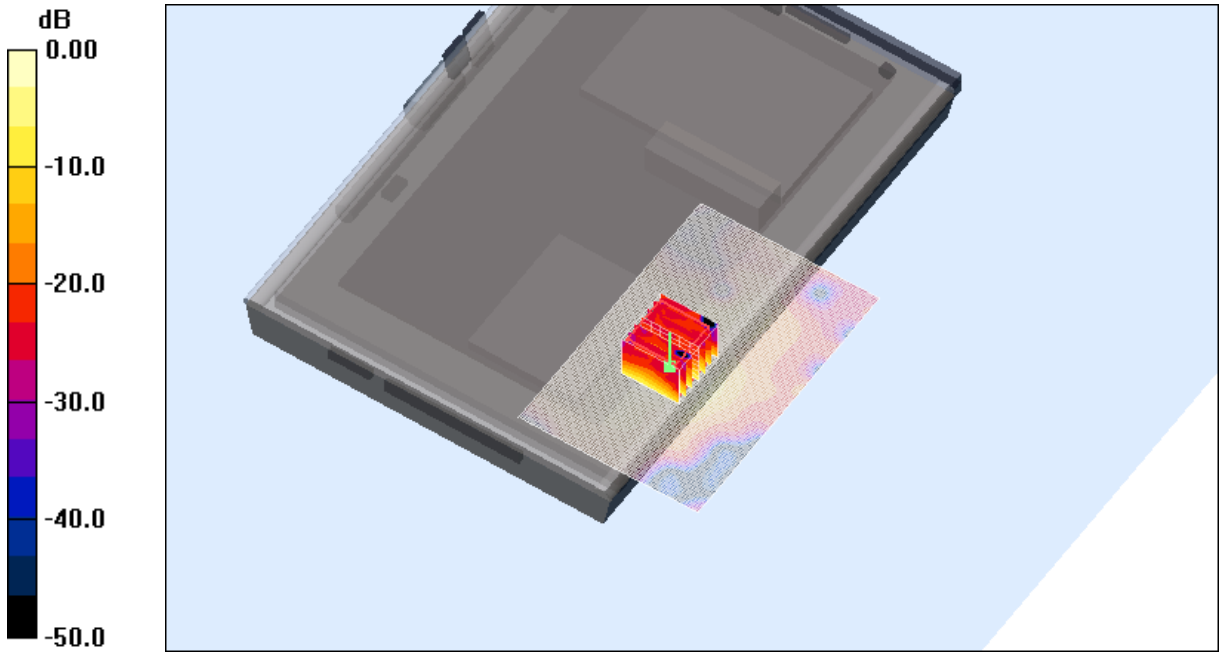

0 dB = 2.63mW/g

SAR MEASUREMENT PLOT 21

Ambient Temperature	**20.3 Degrees Celsius**
Liquid Temperature	**19.9 Degrees Celsius**
Humidity	**37.0 %**

This document must not be copied or reproduced, except in full without the written permission of the Manager, EMC Technologies Pty Ltd
www.emctech.com.au

Test Date: 11 September 2006
File Name: Arm Held OFDM 5.77 GHz Antenna Main Bluetooth Off 11-09-06.da4
DUT: Fujitsu Tablet Chalice with Golan 11abg and Bluetooth; Type: 3945 ABG; Serial: Host: R6700003

* Communication System: OFDM 5770 MHz; Frequency: 5785 MHz; Duty Cycle: 1:1
* Medium parameters used: σ = 6.28855 mho/m, ε_r = 44.0887; ρ = 1000 kg/m^3
- Electronics: DAE3 Sn442; Probe: EX3DV4 - SN3563; ConvF(3.64, 3.64, 3.64)
- Phantom: Flat Phantom 10.1; Serial: P 10.1; Phantom section: Flat 2.2 Section

Channel 157 Test/Area Scan (81x121x1): Measurement grid: dx=10mm, dy=10mm
Maximum value of SAR (interpolated) = 2.88 mW/g

Channel 157 Test/Zoom Scan (7x7x8)/Cube 0: Measurement grid: dx=4.3mm, dy=4.3mm, dz=3mm
Reference Value = 10.4 V/m; Power Drift = -0.333 dB
Peak SAR (extrapolated) = 5.69 W/kg
SAR(1 g) = 1.38 mW/g; SAR(10 g) = 0.433 mW/g
Maximum value of SAR (measured) = 2.79 mW/g

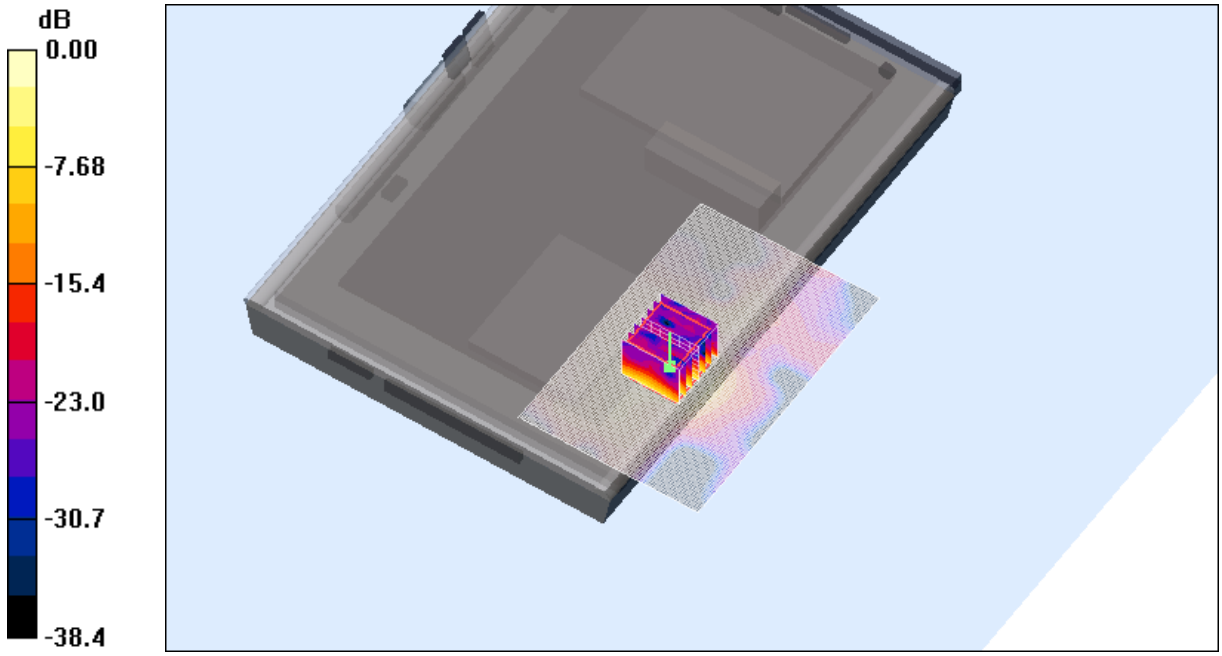

0 dB = 2.79mW/g

SAR MEASUREMENT PLOT 22

Ambient Temperature	**20.3 Degrees Celsius**
Liquid Temperature	**19.9 Degrees Celsius**
Humidity	**37.0 %**

This document must not be copied or reproduced, except in full without the written permission of the Manager, EMC Technologies Pty Ltd
www.emctech.com.au

Test Date: 11 September 2006
File Name: Arm Held OFDM 5.77 GHz Antenna Main Bluetooth Off 11-09-06.da4
DUT: Fujitsu Tablet Chalice with Golan 11abg and Bluetooth; Type: 3945 ABG; Serial: Host: R6700003

* Communication System: OFDM 5770 MHz; Frequency: 5825 MHz; Duty Cycle: 1:1
* Medium parameters used: σ = 6.34647 mho/m, ε_r = 43.9704; ρ = 1000 kg/m^3
- Electronics: DAE3 Sn442; Probe: EX3DV4 - SN3563; ConvF(3.64, 3.64, 3.64)
- Phantom: Flat Phantom 10.1; Serial: P 10.1; Phantom section: Flat 2.2 Section

Channel 165 Test/Area Scan (81x121x1): Measurement grid: dx=10mm, dy=10mm
Maximum value of SAR (interpolated) = 2.98 mW/g

Channel 165 Test/Zoom Scan (7x7x8)/Cube 0: Measurement grid: dx=4.3mm, dy=4.3mm, dz=3mm
Reference Value = 10.2 V/m; Power Drift = -0.111 dB
Peak SAR (extrapolated) = 6.10 W/kg
SAR(1 g) = 1.42 mW/g; SAR(10 g) = 0.443 mW/g
Maximum value of SAR (measured) = 2.92 mW/g

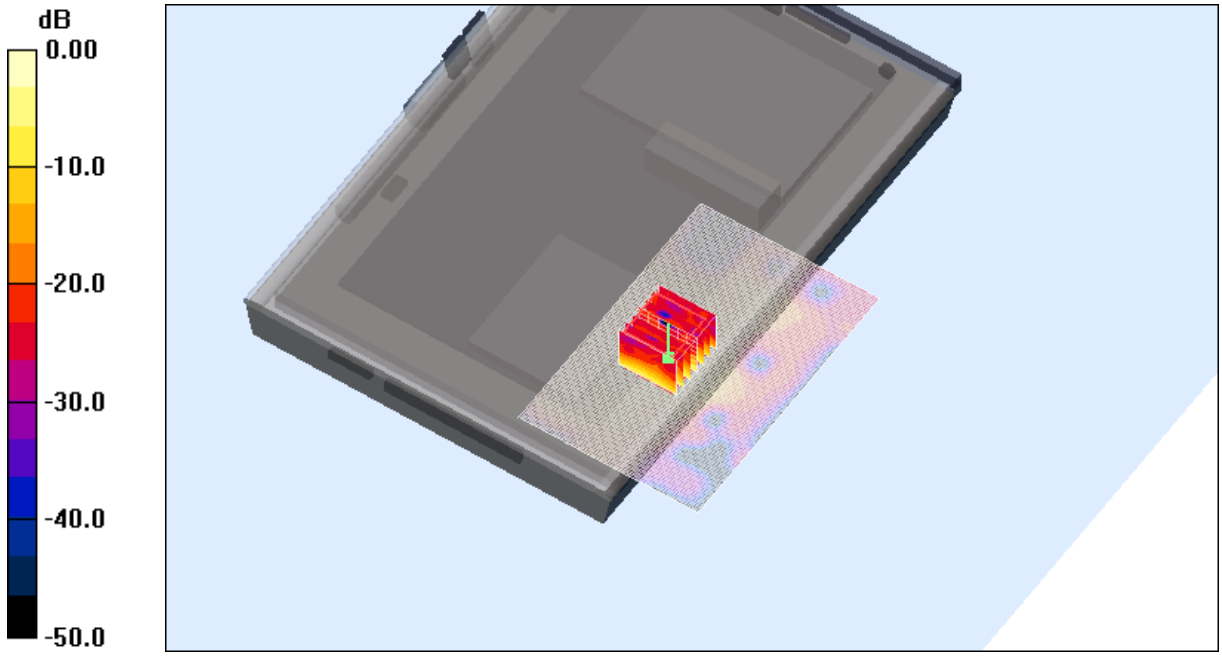

0 dB = 2.92mW/g

SAR MEASUREMENT PLOT 23

Ambient Temperature	**20.3 Degrees Celsius**
Liquid Temperature	**19.9 Degrees Celsius**
Humidity	**37.0 %**

This document must not be copied or reproduced, except in full without the written permission of the Manager, EMC Technologies Pty Ltd
www.emctech.com.au

Z-Axis Graph for Plot 21

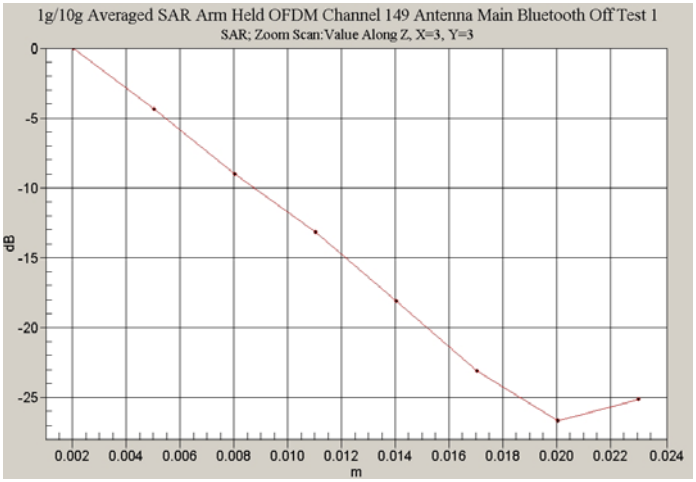

Z-Axis Graph for Plot 22

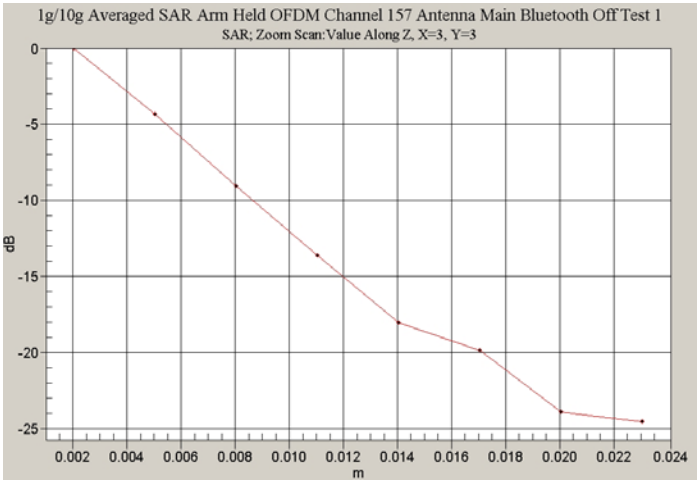

Z-Axis Graph for Plot 23

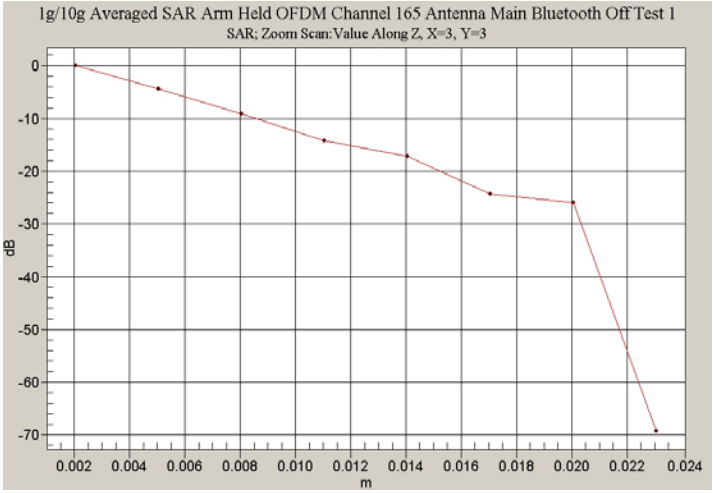

This document must not be copied or reproduced, except in full without the written permission of the Manager, EMC Technologies Pty Ltd
www.emctech.com.au

Test Date: 15 September 2006

File Name: Tablet OFDM 5.77 GHz Antenna Main Bluetooth On Prescan 15-08-06.da4

DUT: Fujitsu Tablet Chalice with Golan 11abg and Bluetooth; Type: 3945 ABG; Serial: Host: R6700003

* Communication System: OFDM 5770 MHz; Frequency: 5785 MHz; Duty Cycle: 1:1
* Medium parameters used: σ = 6.22884 mho/m, ε_r = 44.0613; ρ = 1000 kg/m^3
- Electronics: DAE3 Sn442; Probe: EX3DV4 - SN3563; ConvF(3.64, 3.64, 3.64)
- Phantom: Flat Phantom 10.1; Serial: P 10.1; Phantom section: Flat 2.2 Section

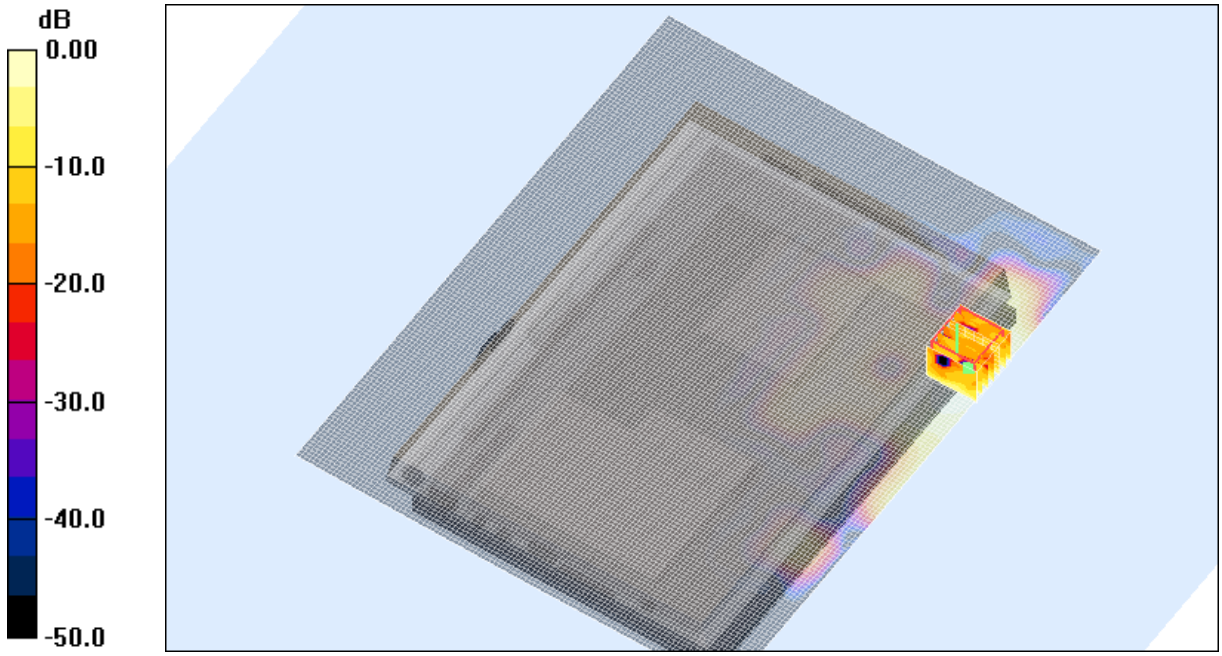

0 dB = 0.201mW/g

SAR MEASUREMENT PLOT 24

Ambient Temperature	**21.1 Degrees Celsius**
Liquid Temperature	**20.6 Degrees Celsius**
Humidity	**46.0 %**

This document must not be copied or reproduced, except in full without the written permission of the Manager, EMC Technologies Pty Ltd
www.emctech.com.au

Test Date: 15 September 2006
File Name: Edge On OFDM 5.77 GHz Antenna Aux Side Bluetooth Off 15-08-06.da4
DUT: Fujitsu Tablet Chalice with Golan 11abg and Bluetooth; Type: 3945 ABG; Serial: Host: R6700003

* Communication System: OFDM 5770 MHz; Frequency: 5745 MHz; Duty Cycle: 1:1
* Medium parameters used: σ = 6.14665 mho/m, ε_r = 44.2117; ρ = 1000 kg/m^3
- Electronics: DAE3 Sn442; Probe: EX3DV4 - SN3563; ConvF(3.64, 3.64, 3.64)
- Phantom: Flat Phantom 10.1; Serial: P 10.1; Phantom section: Flat 2.2 Section

Channel 149 Test/Area Scan (81x121x1): Measurement grid: dx=10mm, dy=10mm
Maximum value of SAR (interpolated) = 0.522 mW/g

Channel 149 Test/Zoom Scan (7x7x8)/Cube 0: Measurement grid: dx=4.3mm, dy=4.3mm, dz=3mm
Reference Value = 10.2 V/m; Power Drift = -0.210 dB
Peak SAR (extrapolated) = 0.949 W/kg
SAR(1 g) = 0.231 mW/g; SAR(10 g) = 0.077 mW/g
Maximum value of SAR (measured) = 0.500 mW/g

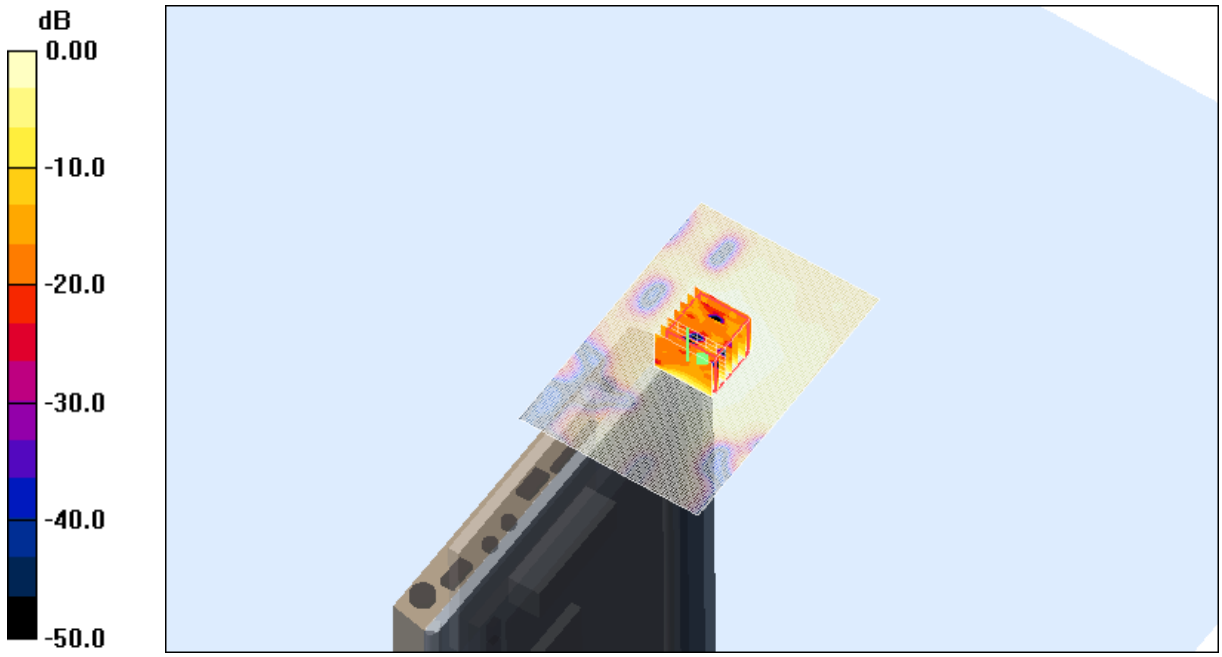

0 dB = 0.500mW/g

SAR MEASUREMENT PLOT 25

Ambient Temperature	**21.1 Degrees Celsius**
Liquid Temperature	**20.6 Degrees Celsius**
Humidity	**46.0 %**

This document must not be copied or reproduced, except in full without the written permission of the Manager, EMC Technologies Pty Ltd
www.emctech.com.au

Test Date: 15 September 2006
File Name: Edge On OFDM 5.77 GHz Antenna Aux Side Bluetooth Off 15-08-06.da4
DUT: Fujitsu Tablet Chalice with Golan 11abg and Bluetooth; Type: 3945 ABG; Serial: Host: R6700003

* Communication System: OFDM 5770 MHz; Frequency: 5785 MHz; Duty Cycle: 1:1
* Medium parameters used: σ = 6.22884 mho/m, ε_r = 44.0613; ρ = 1000 kg/m^3
- Electronics: DAE3 Sn442; Probe: EX3DV4 - SN3563; ConvF(3.64, 3.64, 3.64)
- Phantom: Flat Phantom 10.1; Serial: P 10.1; Phantom section: Flat 2.2 Section

Channel 157 Test/Area Scan (81x121x1): Measurement grid: dx=10mm, dy=10mm
Maximum value of SAR (interpolated) = 0.365 mW/g

Channel 157 Test/Zoom Scan (7x7x8)/Cube 0: Measurement grid: dx=4.3mm, dy=4.3mm, dz=3mm
Reference Value = 7.92 V/m; Power Drift = -0.057 dB
Peak SAR (extrapolated) = 0.840 W/kg
SAR(1 g) = 0.205 mW/g; SAR(10 g) = 0.068 mW/g
Maximum value of SAR (measured) = 0.492 mW/g

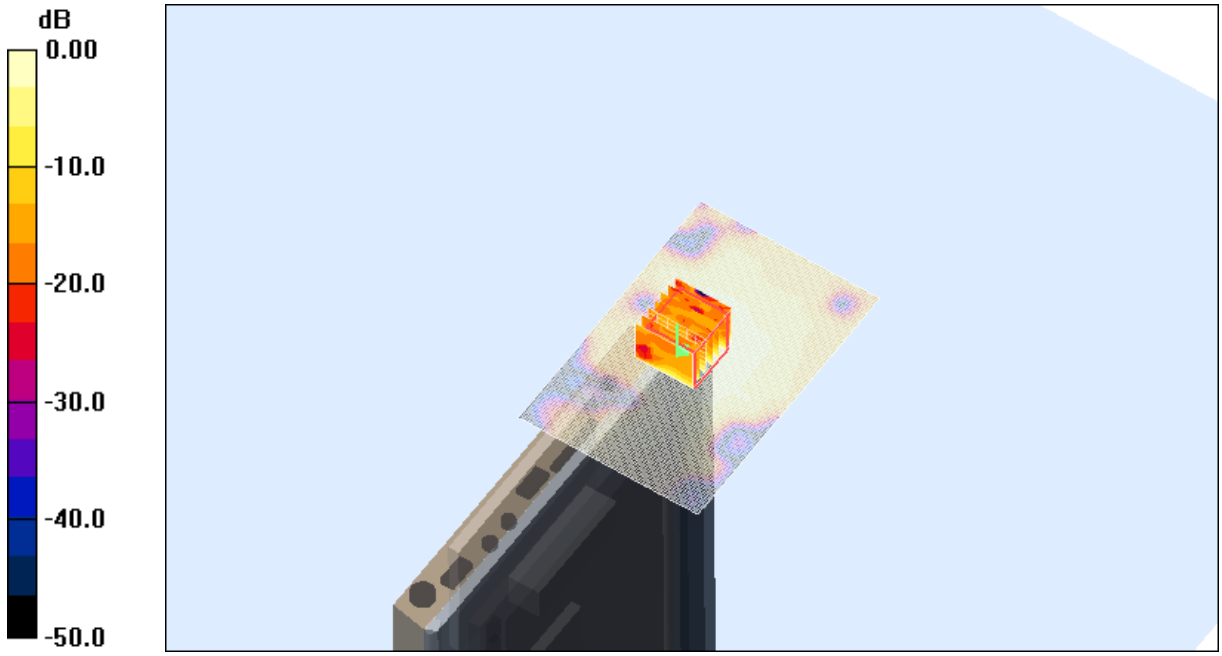

0 dB = 0.492mW/g

SAR MEASUREMENT PLOT 26

Ambient Temperature	**21.1 Degrees Celsius**
Liquid Temperature	**20.6 Degrees Celsius**
Humidity	**46.0 %**

This document must not be copied or reproduced, except in full without the written permission of the Manager, EMC Technologies Pty Ltd
www.emctech.com.au

Test Date: 15 September 2006
File Name: Edge On OFDM 5.77 GHz Antenna Aux Side Bluetooth Off 15-08-06.da4
DUT: Fujitsu Tablet Chalice with Golan 11abg and Bluetooth; Type: 3945 ABG; Serial: Host: R6700003

* Communication System: OFDM 5770 MHz; Frequency: 5825 MHz; Duty Cycle: 1:1
* Medium parameters used: σ = 6.28712 mho/m, ε_r = 43.9571; ρ = 1000 kg/m^3
- Electronics: DAE3 Sn442; Probe: EX3DV4 - SN3563; ConvF(3.64, 3.64, 3.64)
- Phantom: Flat Phantom 10.1; Serial: P 10.1; Phantom section: Flat 2.2 Section

Channel 165 Test/Area Scan (81x121x1): Measurement grid: dx=10mm, dy=10mm
Maximum value of SAR (interpolated) = 0.352 mW/g

Channel 165 Test/Zoom Scan (7x7x8)/Cube 0: Measurement grid: dx=4.3mm, dy=4.3mm, dz=3mm
Reference Value = 9.70 V/m; Power Drift = -0.111 dB
Peak SAR (extrapolated) = 0.780 W/kg
SAR(1 g) = 0.189 mW/g; SAR(10 g) = 0.062 mW/g
Maximum value of SAR (measured) = 0.445 mW/g

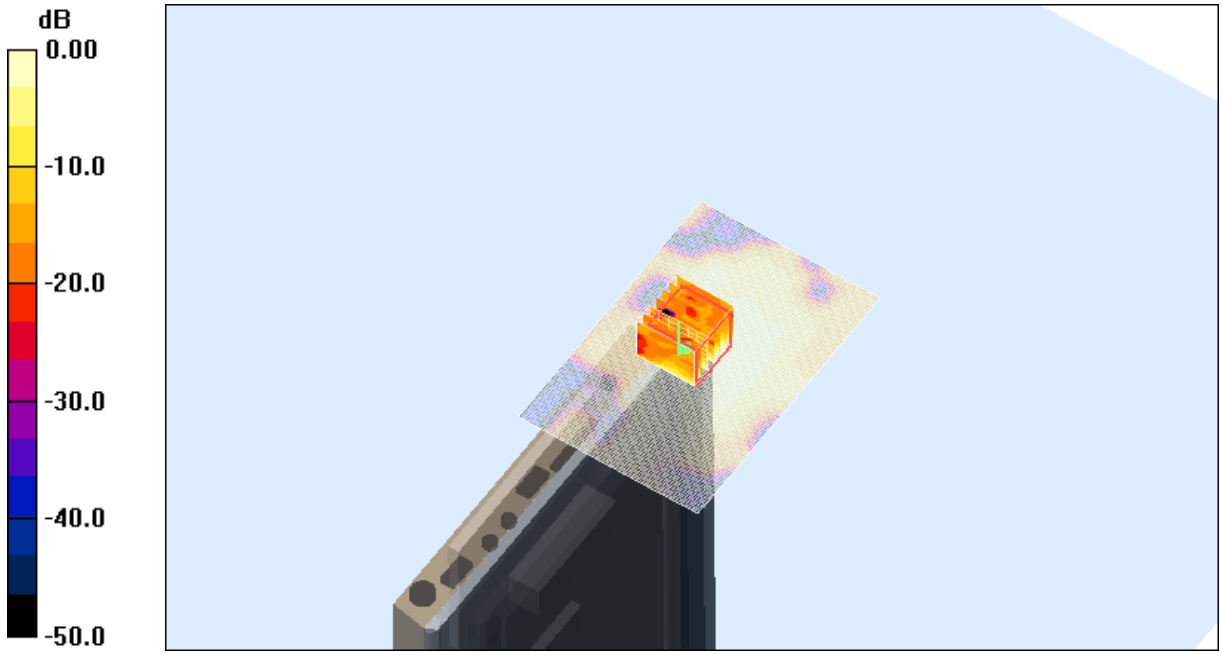

0 dB = 0.445mW/g

SAR MEASUREMENT PLOT 27

Ambient Temperature	**21.1 Degrees Celsius**
Liquid Temperature	**20.6 Degrees Celsius**
Humidity	**46.0 %**

This document must not be copied or reproduced, except in full without the written permission of the Manager, EMC Technologies Pty Ltd
www.emctech.com.au

Z-Axis Graph for Plot 25

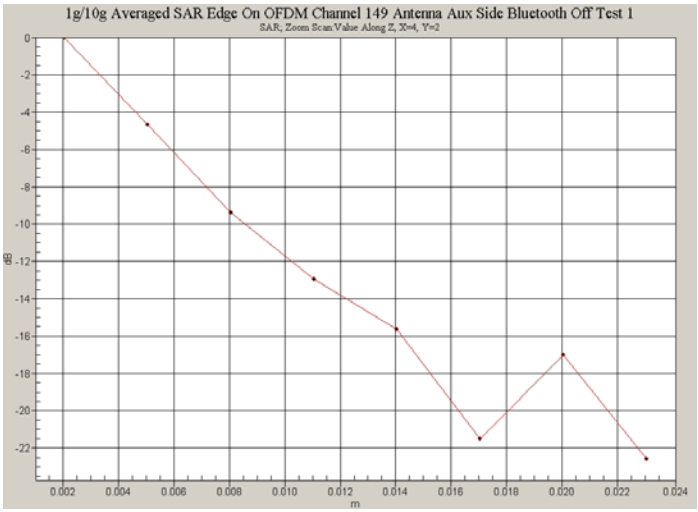

Z-Axis Graph for Plot 26

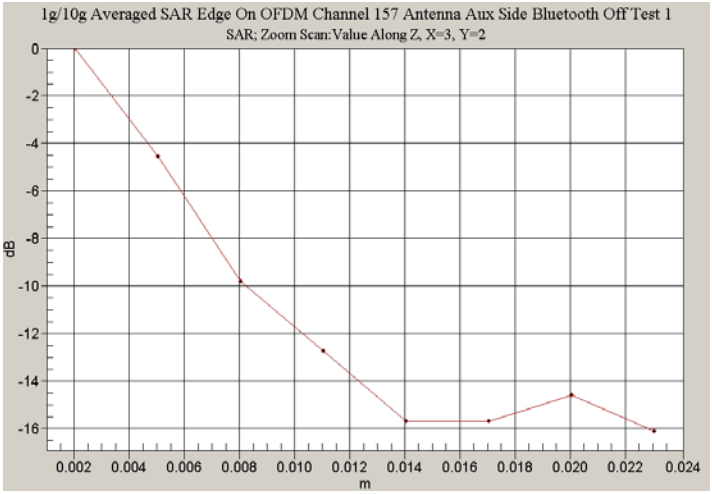

Z-Axis Graph for Plot 27

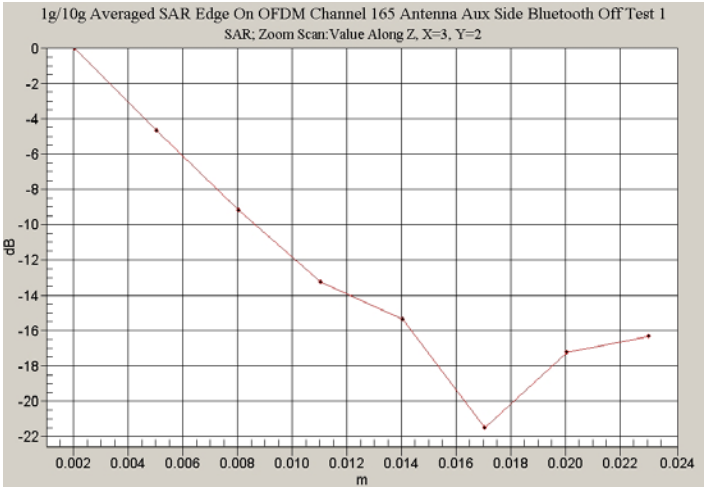

This document must not be copied or reproduced, except in full without the written permission of the Manager, EMC Technologies Pty Ltd
www.emctech.com.au

Test Date: 15 September 2006
File Name: Arm Held OFDM 5.77 GHzl Antenna Aux Bluetooth On 15-09-06.da4
DUT: Fujitsu Tablet Chalice with Golan 11abg and Bluetooth; Type: 3945 ABG; Serial: Host: R6700003

* Communication System: OFDM 5770 MHz; Frequency: 5745 MHz; Duty Cycle: 1:1
* Medium parameters used: σ = 6.14665 mho/m, ε_r = 44.2117; ρ = 1000 kg/m^3
- Electronics: DAE3 Sn442; Probe: EX3DV4 - SN3563; ConvF(3.64, 3.64, 3.64)
- Phantom: Flat Phantom 10.1; Serial: P 10.1; Phantom section: Flat 2.2 Section

Channel 149 Test/Area Scan (81x121x1): Measurement grid: dx=10mm, dy=10mm
Maximum value of SAR (interpolated) = 2.32 mW/g

Channel 149 Test/Zoom Scan (7x7x8)/Cube 0: Measurement grid: dx=4.3mm, dy=4.3mm, dz=3mm
Reference Value = 14.4 V/m; Power Drift = -0.066 dB
Peak SAR (extrapolated) = 4.67 W/kg
SAR(1 g) = 1.12 mW/g; SAR(10 g) = 0.382 mW/g
Maximum value of SAR (measured) = 2.27 mW/g

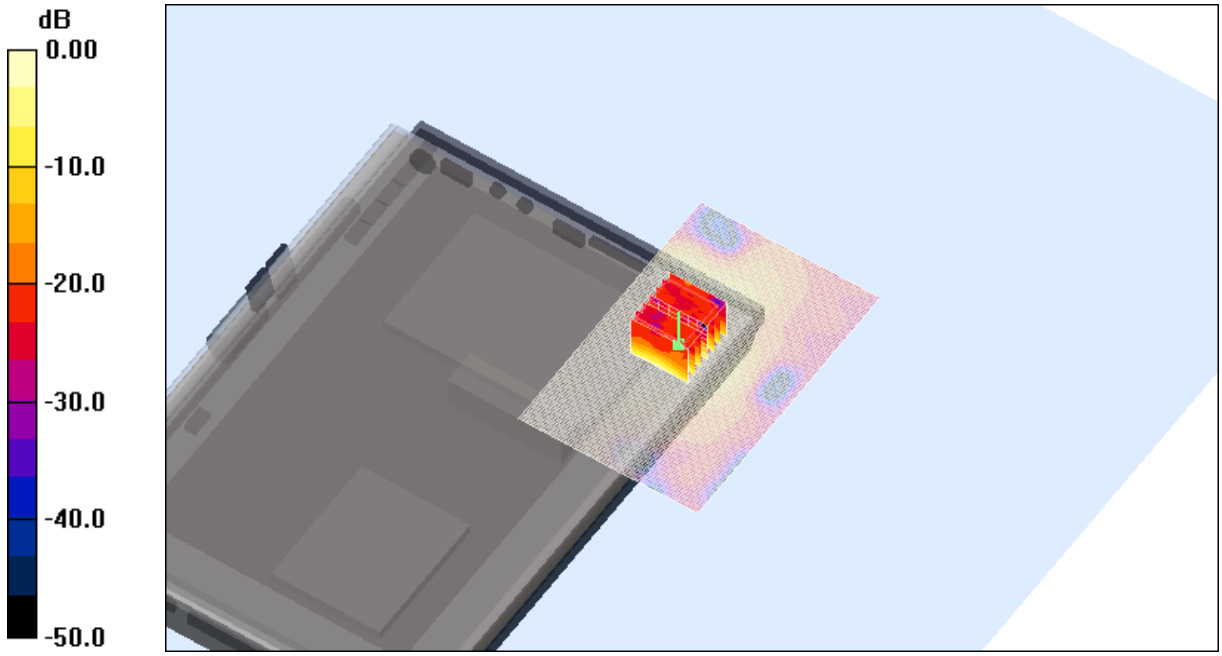

0 dB = 2.27mW/g

SAR MEASUREMENT PLOT 28

Ambient Temperature	**21.1 Degrees Celsius**
Liquid Temperature	**20.6 Degrees Celsius**
Humidity	**46.0 %**

This document must not be copied or reproduced, except in full without the written permission of the Manager, EMC Technologies Pty Ltd
www.emctech.com.au

Test Date: 11 September 2006
File Name: Arm Held OFDM 5.77 GHz Antenna Main Bluetooth On 11-09-06.da4
DUT: Fujitsu Tablet Chalice with Golan 11abg and Bluetooth; Type: 3945 ABG; Serial: Host: R6700003

* Communication System: OFDM 5770 MHz; Frequency: 5825 MHz; Duty Cycle: 1:1
* Medium parameters used: σ = 6.34647 mho/m, ε_r = 43.9704; ρ = 1000 kg/m^3
- Electronics: DAE3 Sn442; Probe: EX3DV4 - SN3563; ConvF(3.64, 3.64, 3.64)
- Phantom: Flat Phantom 10.1; Serial: P 10.1; Phantom section: Flat 2.2 Section

Channel 165 Test/Area Scan (81x121x1): Measurement grid: dx=10mm, dy=10mm
Maximum value of SAR (interpolated) = 2.95 mW/g

Channel 165 Test/Zoom Scan (7x7x8)/Cube 0: Measurement grid: dx=4.3mm, dy=4.3mm, dz=3mm
Reference Value = 13.4 V/m; Power Drift = -0.01 dB
Peak SAR (extrapolated) = 6.25 W/kg
SAR(1 g) = 1.42 mW/g; SAR(10 g) = 0.439 mW/g
Maximum value of SAR (measured) = 2.95 mW/g

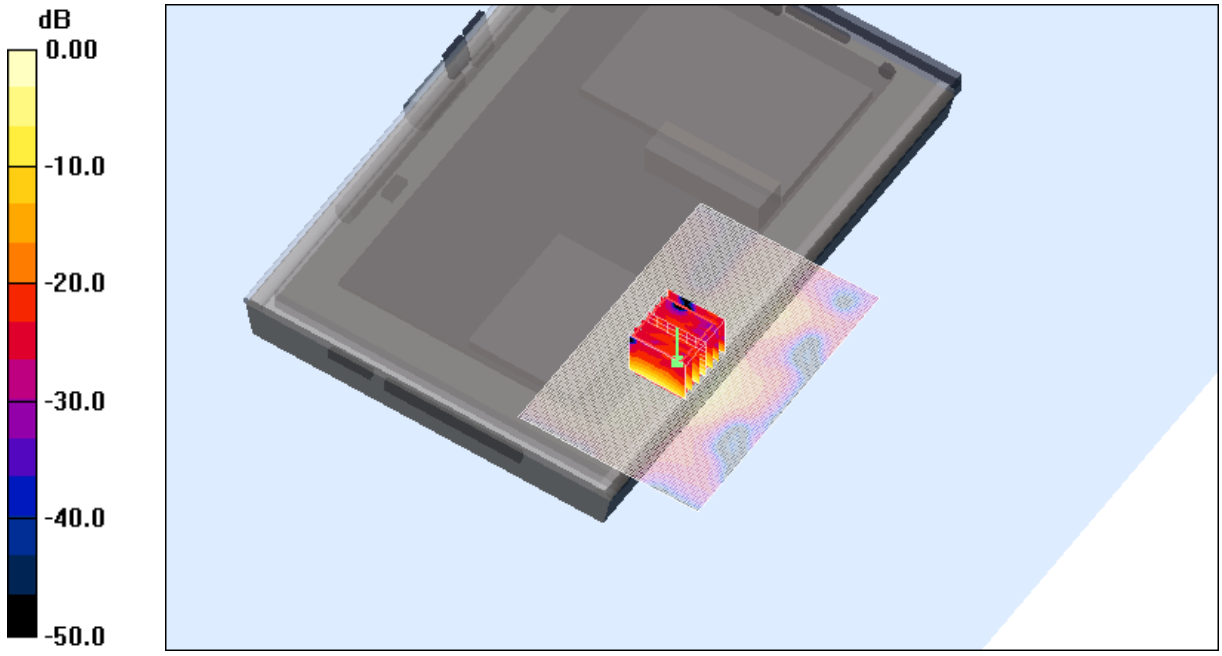

0 dB = 2.95mW/g

SAR MEASUREMENT PLOT 29

Ambient Temperature	**20.3 Degrees Celsius**
Liquid Temperature	**19.9 Degrees Celsius**
Humidity	**37.0 %**

This document must not be copied or reproduced, except in full without the written permission of the Manager, EMC Technologies Pty Ltd
www.emctech.com.au

Z-Axis Graph for Plot 28

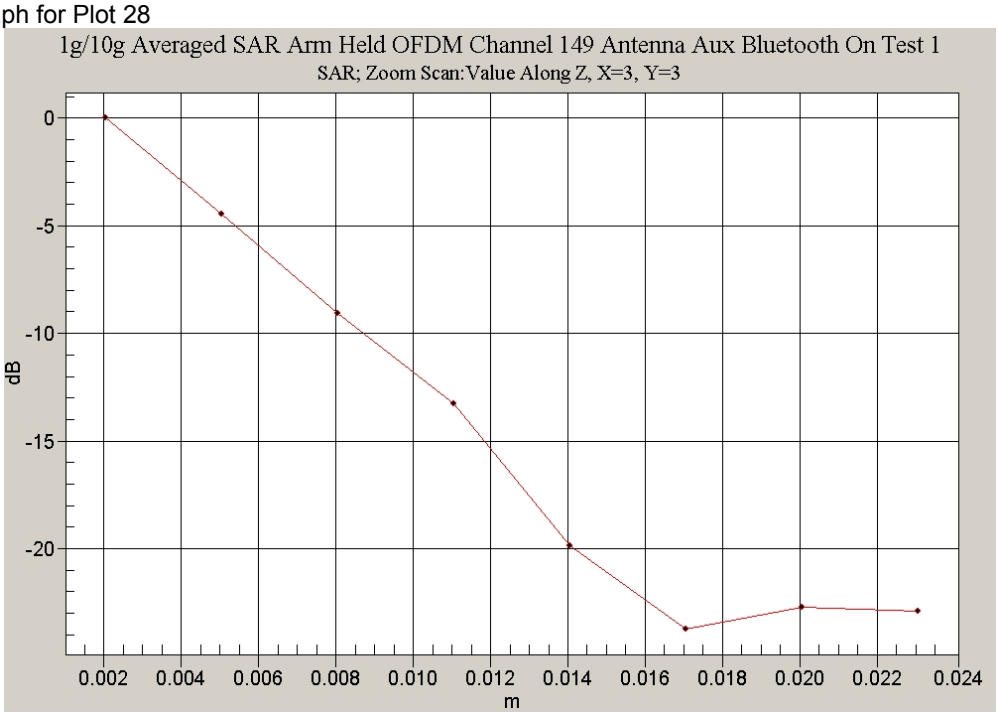

Z-Axis Graph for Plot 29

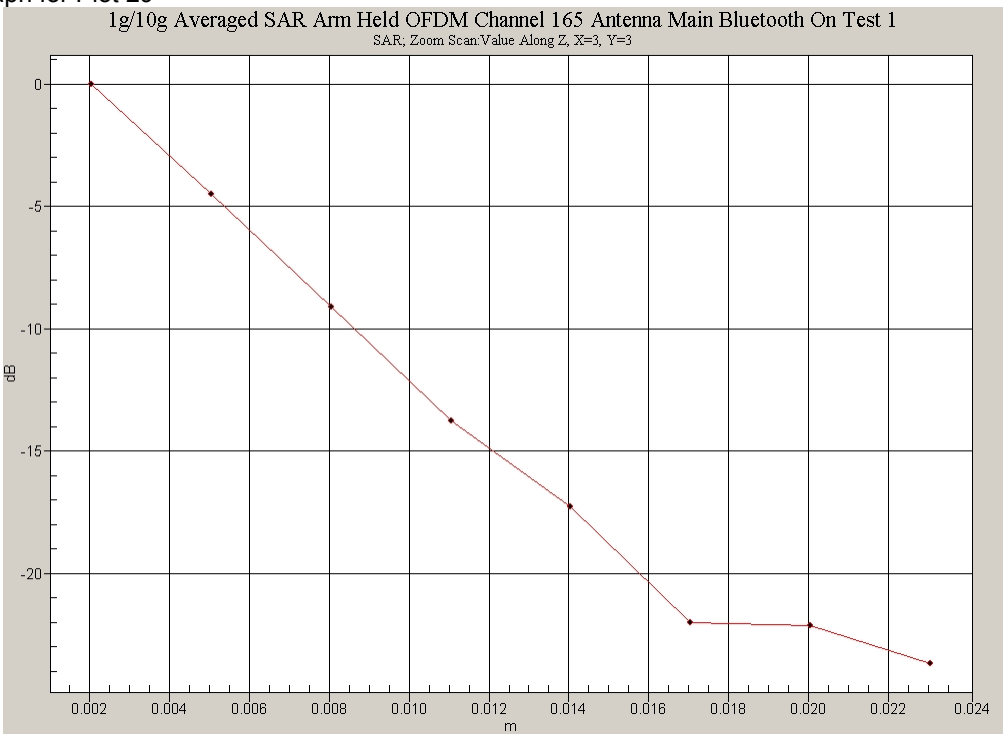

This document must not be copied or reproduced, except in full without the written permission of the Manager, EMC Technologies Pty Ltd
www.emctech.com.au

Test Date: 06 September 2006
File Name: Validation 2450 MHz (DAE442 Probe1377) 06-09-06.da4
DUT: Dipole 2450 MHz; Type: DV2450V2; Serial: 724

* Communication System: CW 2450 MHz; Frequency: 2450 MHz; Duty Cycle: 1:1
* Medium parameters used: σ = 1.82549 mho/m, ε_r = 40.174; ρ = 1000 kg/m^3
- Electronics: DAE3 Sn442; Probe: ET3DV6 - SN1377; ConvF(4.49, 4.49, 4.49)
- Phantom: SAM 22; Serial: 1260; Phantom section: Flat Section

Channel 1 Test/Area Scan (51x51x1): Measurement grid: dx=15mm, dy=15mm
Maximum value of SAR (interpolated) = 18.4 mW/g

Channel 1 Test/Zoom Scan (7x7x7)/Cube 0: Measurement grid: dx=5mm, dy=5mm, dz=5mm
Reference Value = 95.6 V/m; Power Drift = 0.022 dB
Peak SAR (extrapolated) = 29.2 W/kg
SAR(1 g) = 13.7 mW/g; SAR(10 g) = 6.48 mW/g
Maximum value of SAR (measured) = 15.2 mW/g

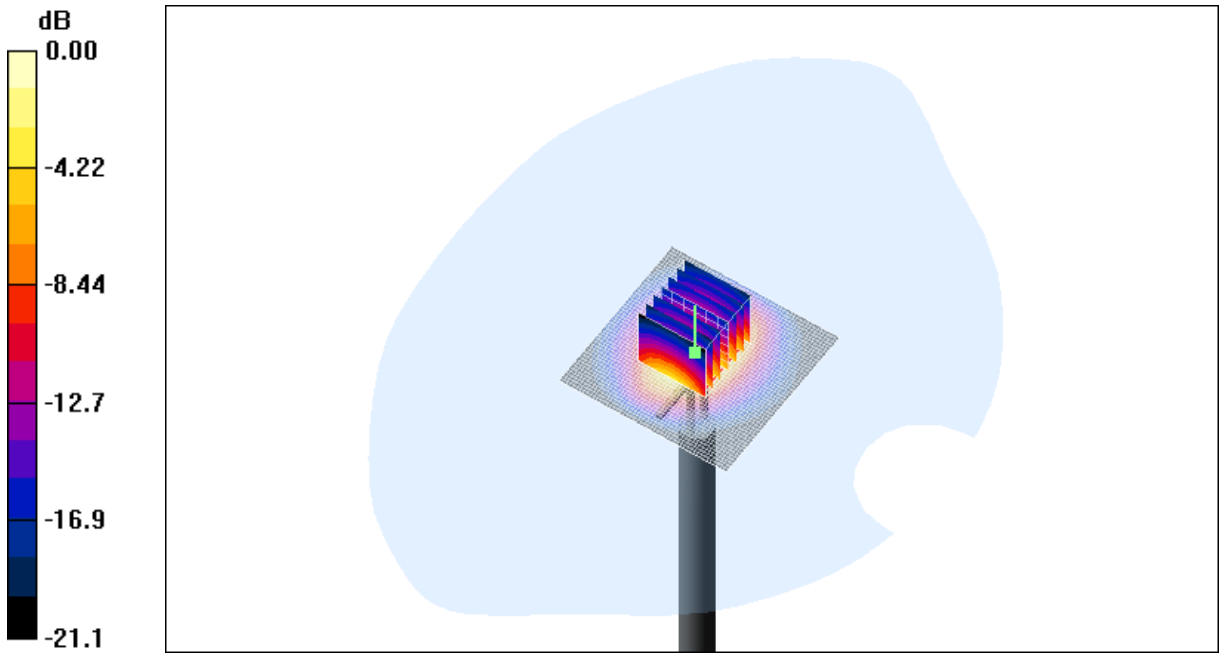

0 dB = 15.2mW/g

SAR MEASUREMENT PLOT 30

Ambient Temperature	**20.2 Degrees Celsius**
Liquid Temperature	**19.8 Degrees Celsius**
Humidity	**43.0 %**

This document must not be copied or reproduced, except in full without the written permission of the Manager, EMC Technologies Pty Ltd
www.emctech.com.au

Test Date: 07 September 2006
File Name: Validation 2450 MHz (DAE442 Probe1377) 07-09-06.da4
DUT: Dipole 2450 MHz; Type: DV2450V2; Serial: 724

* Communication System: CW 2450 MHz; Frequency: 2450 MHz; Duty Cycle: 1:1
* Medium parameters used: σ = 1.77682 mho/m, ε_r = 39.7814; ρ = 1000 kg/m^3
- Electronics: DAE3 Sn442; Probe: ET3DV6 - SN1377; ConvF(4.49, 4.49, 4.49)
- Phantom: SAM 22; Serial: 1260; Phantom section: Flat Section

Channel 1 Test/Area Scan (51x51x1): Measurement grid: dx=15mm, dy=15mm
Maximum value of SAR (interpolated) = 17.3 mW/g

Channel 1 Test/Zoom Scan (7x7x7)/Cube 0: Measurement grid: dx=5mm, dy=5mm, dz=5mm
Reference Value = 95.4 V/m; Power Drift = 0.00 dB
Peak SAR (extrapolated) = 28.8 W/kg
SAR(1 g) = 13.4 mW/g; SAR(10 g) = 6.35 mW/g
Maximum value of SAR (measured) = 14.6 mW/g

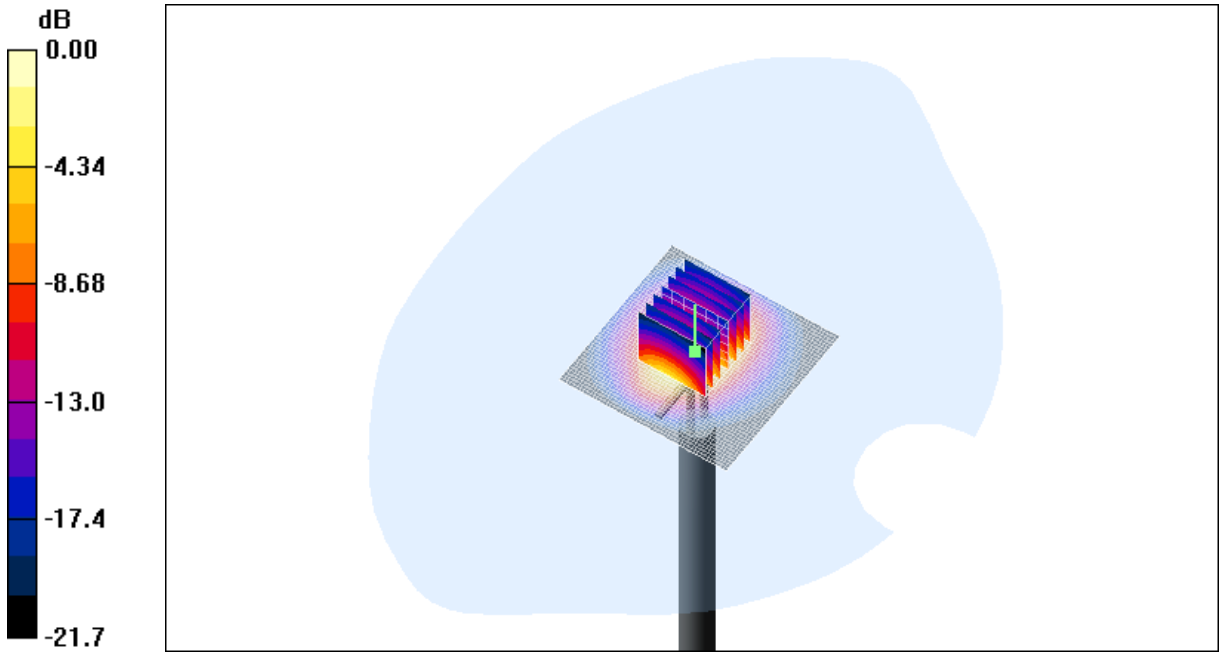

0 dB = 14.6mW/g

SAR MEASUREMENT PLOT 31

Ambient Temperature	**20.3 Degrees Celsius**
Liquid Temperature	**20.0 Degrees Celsius**
Humidity	**41.0 %**

This document must not be copied or reproduced, except in full without the written permission of the Manager, EMC Technologies Pty Ltd
www.emctech.com.au

Test Date: 15 September 2006
File Name: Validation 5800MHz (DAE 442 Probe EX3DV4) 15-09-06.da4
DUT: Dipole 5200_5800 MHz; Type: D5GHzV2; Serial: 1008

* Communication System: CW 5800 MHz; Frequency: 5800 MHz; Duty Cycle: 1:1
* Medium parameters used: σ = 5.28615 mho/m, ε_r = 36.3377; ρ = 1000 kg/m^3
- Electronics: DAE3 Sn442; Probe: EX3DV4 - SN3563; ConvF(3.66, 3.66, 3.66)
- Phantom: SAM 22; Serial: 1260; Phantom section: Flat Section

Channel 1 Test/Area Scan (91x91x1): Measurement grid: dx=10mm, dy=10mm
Maximum value of SAR (interpolated) = 42.7 mW/g

Channel 1 Test/Zoom Scan (7x7x8)/Cube 0: Measurement grid: dx=4.3mm, dy=4.3mm, dz=3mm
Reference Value = 94.9 V/m; Power Drift = 0.040 dB
Peak SAR (extrapolated) = 91.3 W/kg
SAR(1 g) = 20.3 mW/g; SAR(10 g) = 5.64 mW/g
Maximum value of SAR (measured) = 43.7 mW/g

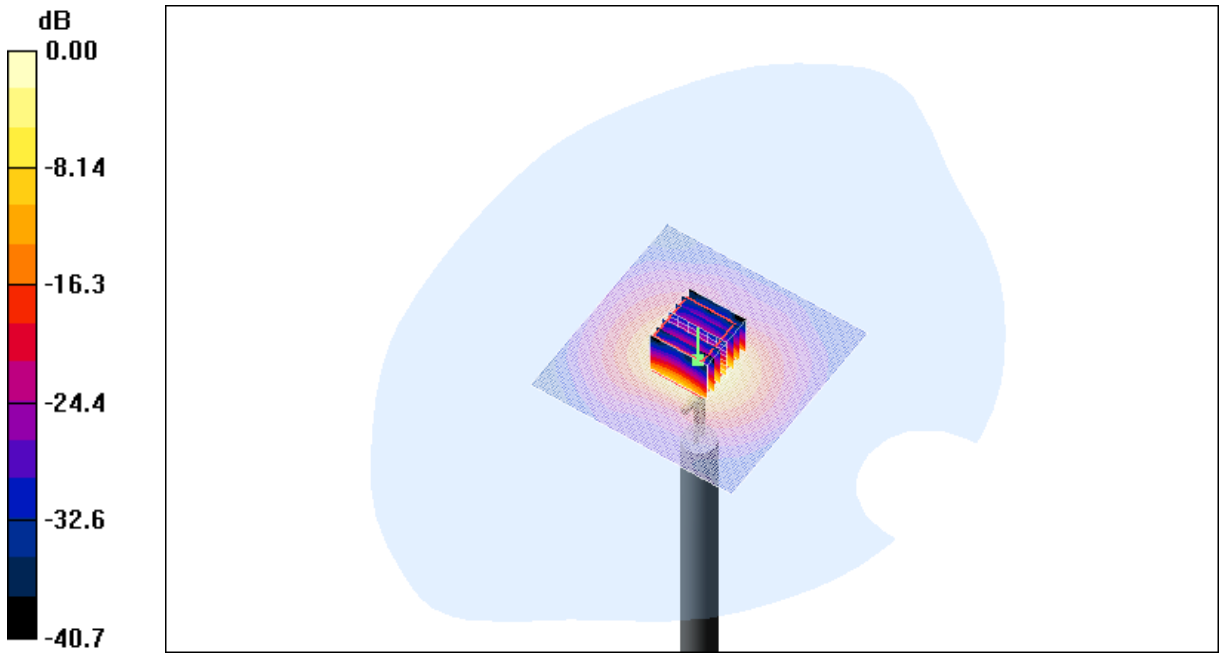

0 dB = 43.7mW/g

SAR MEASUREMENT PLOT 32

Ambient Temperature	**21.1 Degrees Celsius**
Liquid Temperature	**20.6 Degrees Celsius**
Humidity	**46.0 %**

This document must not be copied or reproduced, except in full without the written permission of the Manager, EMC Technologies Pty Ltd
www.emctech.com.au

Z-Axis Graph for Plot 30

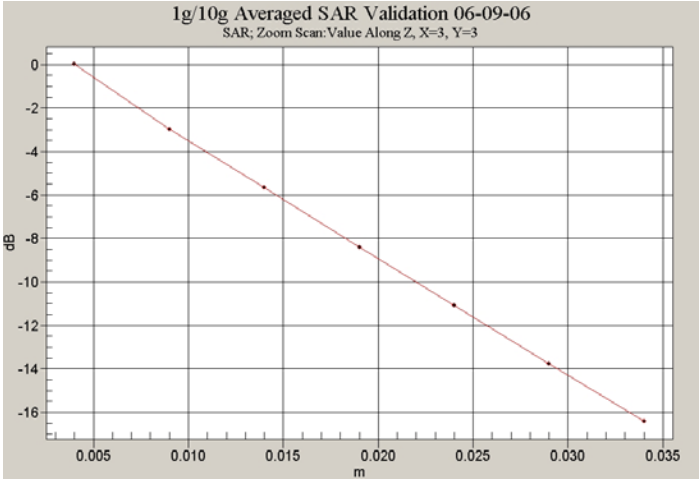

Z-Axis Graph for Plot 31

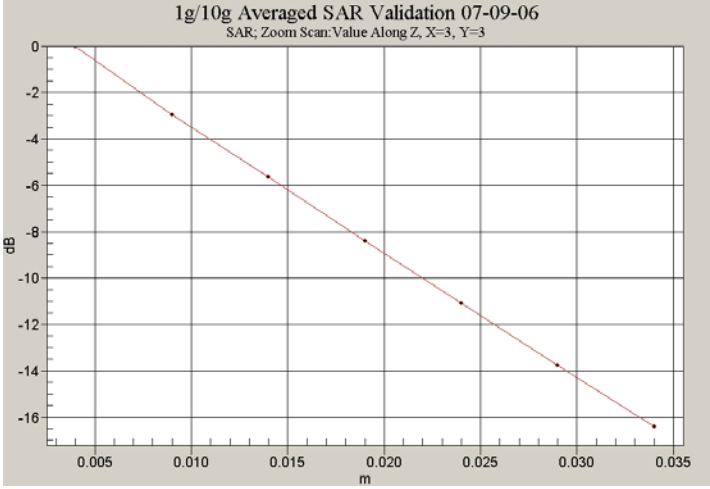

Z-Axis Graph for Plot 32

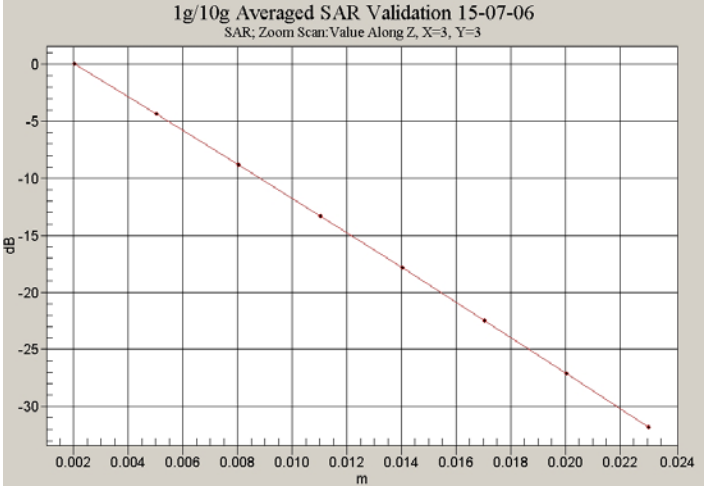

This document must not be copied or reproduced, except in full without the written permission of the Manager, EMC Technologies Pty Ltd
www.emctech.com.au