EMC Technologies Report Number: M061025_Cert_AR5BXB6_DTS_BT

APPENDIX I1

FUJITSU NOTEBOOK USER MANUAL (part 1)

P7120.book Page 1 Monday, October 10, 2005 4:38 PM

Copyright and Trademark Information

Fujitsu Computer Systems Corporation has made every effort to ensure the accuracy and completeness of this document. However, as ongoing development efforts are continually improving the capabilities of our products, we cannot guarantee the accuracy of the contents of this document. We disclaim liability for errors, omissions, or future changes. The absence of a product or service name, slogan, or logo does not constitute a waiver of any trademark or other intellectual property rights relating to that name, slogan, or logo owned by Fujitsu Computer Systems Corporation, its parent, subsidiaries, and affiliated companies.

Fujitsu, the Fujitsu logo, and LifeBook are registered trademarks of Fujitsu Limited.

Intel and Pentium are registered trademarks and Centrino is a trademark of Intel Corporation or its subsidiaries in the United States and other countries.

IBM, IBM PC AT, and IBM PS/2 are registered trademarks of IBM Corporation in the United States, other countries, or both.

MS, MS-DOS, and Windows are either registered trademarks or trademarks of Microsoft Corporation in the United States and/or other countries.

PCMCIA is a trademark of the Personal Computer Memory Card International Association.

Memory Stick and Memory Stick Duo are trademarks of Sony, its parent, and/or its affiliates.

Adobe, Acrobat, and Acrobat Reader are either registered trademarks or trademarks of Adobe Systems, Incorporated in the United States and/or other countries.

Dolby Headphone manufactured under license from Dolby Laboratories. Dolby, Pro Logic, and the double-D symbol are trademarks of Dolby Laboratories.

Quicken is a registered trademark and/or registered service mark of Intuit, Inc. or one of its subsidiaries in the United States and other countries.

InterVideo and WinDVD are registered trademarks of Intervideo, Inc.

Realtek is a registered trademark of Realtek Semiconductor Corporation.

Norton AntiVirus is a registered trademark of Symantec Corporation in the United States and other countries.

This product incorporates copyright protection technology that is protected by method claims of certain U.S. patents and other intellectual property rights owned by Macrovision Corporation and other rights owners. Use of this copyright protection technology must be authorized by Macrovision Corporation, and is intended for home and other limited viewing uses only unless otherwise authorized by Macrovision Corporation. Reverse engineering or disassembly is prohibited.

All other trademarks mentioned herein are the property of their respective owners.

Warning

Handling the cord on this product will expose you to lead, a chemical known to the State of California to cause birth defects or other reproductive harm.

Wash hands after handling.

© Copyright 2005 Fujitsu Computer Systems Corporation. All rights reserved. No part of this publication may be copied, reproduced, translated, stored, or transmitted in any electronic form without the written consent of Fujitsu Computer Systems Corporation.

B6FH-7661-01EN-00

DECLARATION OF CONFORMITY

according to FCC Part 15

Responsible Party Name:	Fujitsu Computer Systems Corporation
Address:	1250 E. Arques Avenue Sunnyvale, CA 94085
Telephone:	(408) 746-6000
Declares that product:	Base Model Configurations: LifeBook P7230 notebook

Complies with Part 15 of the FCC Rules.

This device complies with Part 15 of the FCC rules. Operations are subject to the following two conditions: (1) This device may not cause harmful interference, (2) This device must accept any interference received, including interference that may cause undesired operation.

P7120.book Page 2 Monday, October 10, 2005 4:38 PM

UL Notice

This unit requires an AC adapter to operate. Use only UL Listed Class 2 Adapters with an output rating of 16 VDC, with a current of 3.75A minimum.

AC Adapter output polarity:

- When using your notebook equipment, basic safety precautions should always be followed to reduce the risk of fire, electric shock and injury to persons, including the following:
  - Do not use this product near water for example, near a bathtub, washbowl, kitchen sink or laundry tub, in a wet basement or near a swimming pool.
  - Avoid using the modem during an electrical storm. There may be a remote risk of electric shock from lightning.
  - Do not use the modem to report a gas leak in the vicinity of the leak.
  - Use only the power cord and batteries indicated in this manual. Do not dispose of batteries in a fire. They may explode. Check with local codes for possible special disposal instructions.
- To reduce the risk of fire, use only No. 26 AWG or larger UL Listed or CSA Certified Telecommunication Line Cord

SAVE THESE INSTRUCTIONS

For Authorized Repair Technicians Only

- For continued protection against risk of fire, replace only with the same type and rating fuse.
- Danger of explosion if Lithium (clock) battery is incorrectly replaced. Replace only with the same or equivalent type recommended by the manufacturer. Dispose of used batteries according to the manufacturer's instruction.

System Disposal

LAMP(S) INSIDE THIS PRODUCT CONTAIN MERCURY AND MUST BE RECYCLED OR DISPOSED OF ACCORDING TO LOCAL, STATE, OR FEDERAL LAWS.

P7120.book Page 3 Monday, October 10, 2005 4:38 PM

Fujitsu LifeBook® P7000 Notebook
Table of Contents

1

PREFACE

Preface

About This Guide 1
Fujitsu Contact Information 1
Warranty 1

2

GETTING TO KNOW YOUR LIFEBOOK NOTEBOOK

Overview

Unpacking 5

Locating the Controls/Connectors

Top and Front Components 6
Left-Side Panel Components 8
Right-Side Panel Components 9
Rear Panel Components 10
Bottom Components 11

Status Indicator Panel

Battery Charging Indicators 12
Battery Level Indicators 12
Hard Disk/Optical Drive Access Indicator 12
Num Lock Indicator 12
Caps Lock Indicator 12
Scroll Lock Indicator 12

Keyboard

Using the Keyboard 13
Numeric Keypad 13
Windows Keys 13
Cursor Keys 13
Function Keys 14

Touchpad Pointing Device

Clicking 15
Double-Clicking 15
Dragging 16
Scrolling 16
Touchpad Control Adjustment 16

Volume Control

Controlling the Volume 17

Flexible Bay Devices

Removing and Installing Modular Devices 18

3

GETTING STARTED WITH YOUR LIFEBOOK NOTEBOOK

Power Sources

Connecting the Power Adapters 23

Display Panel

Opening/Closing the Display Panel 24
Adjusting Display Panel Brightness 24

Starting Your LifeBook Notebook

Power On 25
BIOS Setup Utility 25
Booting the System 26
Registering Your LifeBook notebook 26
Installing Click Me! 26

Power Management

Suspend/Resume/Power On Button 27
ECO Button 27
Suspend Mode 27
Hibernation Feature 28
Display Timeout 28
Hard Disk Timeout 28
Windows Power Management 28
Restarting the System 28
Power Off 28

P7120.book Page 4 Monday, October 10, 2005 4:38 PM

4

USER-INSTALLABLE FEATURES

Lithium ion Battery

Recharging the Batteries. 31
Replacing the Battery 32

External Floppy Disk Drive

Loading a Disk 33
Ejecting a Disk 33
Preparing a Disk for Use. 33

Optical Drive

Media Player Software 34
Loading a DVD or CD 34
Removing Media 35
Using the Optical Drive Software 35
Using DolbyTM Headphone. 35
Using the Optical Drive on Battery Power 36
Auto Insert Notification Function 36
Emergency Tray Release. 36

PC Cards

Installing PC Cards 37
Removing PC Cards 37

Memory Stick/SD/xD Slot

Installing Memory Stick/SD/xD Cards 38
Removing A Memory Stick/SD/xD Card 39

Memory Upgrade Module

Accessing the Memory Compartment 40
Removing a Memory Module. 40
Installing a Memory Module 41
Checking the Memory Capacity 41

Device Ports

Modem (RJ-11) Telephone Port 42
Internal LAN (RJ-45) Port. 42
IEEE 1394 Port 43
S-Video Out Port (TV Out) 43
Universal Serial Bus Ports 43
Headphone/Line-Out Jack 43
Microphone Jack 44
External Video Port 44

5

WIRELESS LAN USER'S GUIDE

Before Using the Wireless LAN

Wireless LAN Modes Using this Device 48
Wireless Network Considerations. 49
Deactivating the WLAN Device 49
Activating the WLAN Device 50

Configuration of the WLAN Device

Flow of Operations 51
Configuration Using Intel PROSet Software 51
Configuration Using Atheros Client Utility 52
Connection to the Network 53

Troubleshooting the WLAN

Troubleshooting. 57

Wireless LAN Glossary

Glossary. 58

IP address information

Additional Information. 60

WLAN Specifications

Specifications 61

Using the Bluetooth Device

What is Bluetooth 62
Where to Find Information About Bluetooth . . . 62

6

TROUBLESHOOTING YOUR LIFEBOOK NOTEBOOK

Troubleshooting

Identifying the Problem 65
Specific Problems 65
Troubleshooting Table 66
Power On Self Test Messages 73
Emergency DVD Tray Release 74
Modem Result Codes. 74

Restoring Pre-installed Software

Restoring the Factory Image 75
Automatically Downloading Driver Updates. . . . 76

P7120.book Page 5 Monday, October 10, 2005 4:38 PM

7

CARING FOR YOUR LIFEBOOK NOTEBOOK

Care and Maintenance

Batteries 80
Floppy Disks and Drives 80
Media Care 81
PC Cards 81

8

SYSTEM SPECIFICATIONS

Specifications

Configuration Label 85
Microprocessor 85
Memory 85
Video 85
Audio 85
Mass Storage Device Options 85
Features 85
Device Ports 86
Keyboard 86
Power 86
Dimensions and Weight 86
Environmental Requirements 86
Popular Accessories 86
Pre-Installed Software 87
Learning About Your Application Software 87
Regulatory Information 89

9

GLOSSARY

Glossary 93

APPENDIX: FINGERPRINT SENSOR DEVICE

Introducing the Fingerprint Sensor Device 99
Getting Started 99
Installing OmniPass 99
User Enrollment 100
Using OmniPass 101
Configuring OmniPass 103
OmniPass Control Center 104
Troubleshooting 105

INDEX

Index 107

P7120.book Page 6 Monday, October 10, 2005 4:38 PM

P7120.book Page 1 Monday, October 10, 2005 4:38 PM

1
Preface

P7120.book Page 2 Monday, October 10, 2005 4:38 PM

P7120.book Page 1 Monday, October 10, 2005 4:38 PM

Preface

ABOUT THIS GUIDE

The LifeBook P7120/P7120D Series notebook from Fujitsu Computer Systems Corporation is a small but powerful computer. It is powered by an Intel Pentium M Ultra Low Voltage (ULV) processor, has a built-in wide-aspect Crystal View color display, and brings the functionality of desktop personal computers (PCs) to a portable environment.

This manual explains how to operate your LifeBook notebook's hardware and built-in system software.

It comes with Microsoft Windows® XP Home or Window XP Pro pre-installed.

Conventions Used in the Guide

Keyboard keys and on-screen buttons appear in brackets. Example: [Fn], [F1], [ESC], and [CTRL].

Pages with additional information about a specific topic are cross-referenced within the text.
Example: (See page xx.)

DOS commands you enter appear in Courier type.
Example: `Shutdown the computer?`

The information icon highlights information that will enhance your understanding of the subject material.

The caution icon highlights information that is important to the safe operation of your computer, or to the integrity of your files. Please read all caution information carefully.

The warning icon highlights information that can be hazardous to either you, your LifeBook notebook, or your files. Please read all warning information carefully.

FUJITSU CONTACT INFORMATION

Service and Support

You can contact Fujitsu Service and Support in the following ways:

- Toll free: 1-800-8Fujitsu (1-800-838-5487)
- E-mail: 8fujitsu@us.fujitsu.com
- Web site:
  http://www.computers.us.fujitsu.com/support

Before you place the call, you should have the following information ready so that the customer support representative can provide you with the fastest possible solution:

- Product name
- Product configuration number
- Product serial number
- Purchase date
- Conditions under which the problem occurred
- Any error messages that have occurred
- Type of device connected, if any

Fujitsu Online

You can go directly to the online Fujitsu Product catalog for your LifeBook notebook by clicking on the Fujitsu Weblinks -> LifeBook Accessories Web site URL link, located in the Windows Start menu, or by going to www.shopfujitsu.com.

You can also reach Fujitsu Service and Support online by clicking on the Fujitsu Weblinks -> Service and Support Web site URL link, located in the Windows Start menu.

You must have an active internet connection to use the online URL links.

WARRANTY

Your LifeBook notebook is backed by an International Limited Warranty. Check the service kit that came with your notebook for warranty terms and conditions.

P7120.book Page 2 Monday, October 10, 2005 4:38 PM

2

Getting to Know Your LifeBook Notebook

P7120.book Page 4 Monday, October 10, 2005 4:38 PM

P7120.book Page 5 Monday, October 10, 2005 4:38 PM

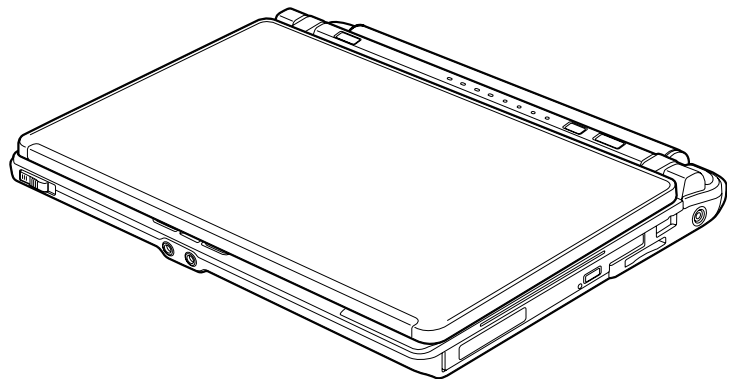

Figure 2-1 Fujitsu LifeBook P7000 notebook

Overview

This section describes the components of your Fujitsu LifeBook P7000 notebook. We strongly recommend that you read it before using your notebook – even if you are already familiar with notebook computers.

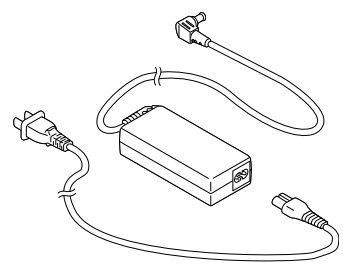

Figure 2-2 AC Adapter

UNPACKING

When you receive your LifeBook notebook, unpack it carefully, and compare the parts you have received with the items listed below.

- LifeBook P7000/P7000D notebook*(Figure 2-1)*
- AC adapter with AC power cord *(Figure 2-2)*
- Lithium ion battery
- Weight Saver
- Phone/Modem (RJ-11) telephone cable
- Driver and Application Restore Disc
- Recovery Disc
- Getting Started Guide
- User's Guide (this document)
- International Limited Warranty Brochure
- Certification of Authenticity

Depending upon the configuration of your system, one or more of the following items may also be included:

- Modular DVD/CD-RW Combo Drive
- Modular Dual-Layer Multi-Format DVD Writer
- External Floppy Disk Drive
- Modular 2nd battery
- Additional main high capacity battery
- RecordNow CD (included with Combo drive)
- RecordNow and WinDVD Creator CD (included with Dual-Layer Multi-Format DVD Writer)

Once you have checked and confirmed that your LifeBook system is complete, read through the following pages to learn about all of your notebook's components.

P7120.book Page 6 Monday, October 10, 2005 4:38 PM

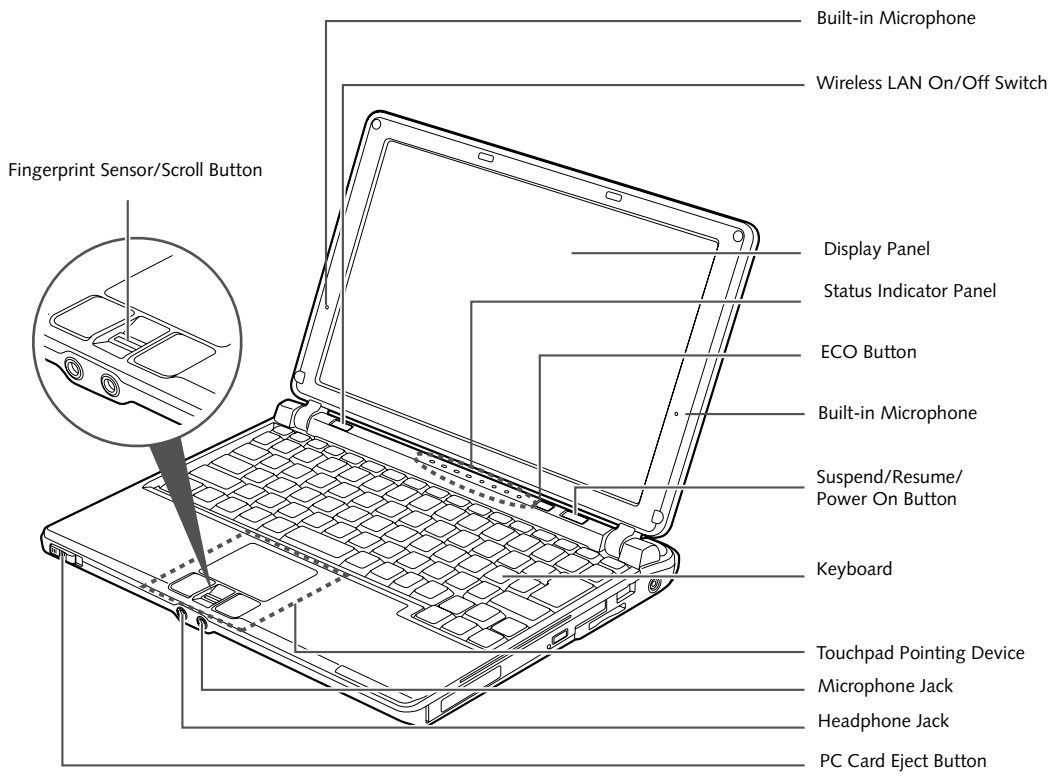

Figure 2-3 LifeBook notebook with display open

Locating the Controls and Connectors

TOP AND FRONT COMPONENTS

The following is a brief description of your LifeBook notebook's top and front components.

Built-in Microphones

The two built-in microphones allow you to input mono audio. The built-in microphones support noise-cancellation when used with applicable third-party software.

Wireless LAN On/Off Switch

Allows you to turn the optional Wireless LAN device on and off. Note that this switch is present on all models of the LifeBook P7000 notebook, but it is functional only on those with an optional Wireless LAN installed.

Display Panel

The display panel is a color LCD panel with back lighting for the display of text and graphics.

Status Indicator Panel

The Status Indicator Panel displays symbols that correspond with a specific component of your LifeBook notebook. *(See Status Indicator Panel on page 12 for more information)*

Suspend/Resume/Power On Button

The Suspend/Resume/Power On button allows you to suspend notebook activity without powering off, resume your LifeBook notebook from suspend mode, and power on your notebook when it has been shut down from Windows. *(See Suspend/Resume/Power On Button on page 27 for more information)*

ECO Button

The ECO button launches the Power Saving Utility which is programmed in the LifeBook Application Panel. *(See ECO Button on page 27 for more information)*

Keyboard

A full-size keyboard with dedicated Windows keys. *(See Keyboard on page 13 for more information)*

Touchpad Pointing Device/Scroll Button

The Touchpad pointing device is a mouse-like cursor control with three buttons (left, right, and fingerprint sensor/scroll button). *(See Touchpad Pointing Device on page 15 for more information)*.

Microphone Jack

The microphone jack allows you to connect an external mono microphone. *(See Microphone Jack on page 44 for more information)*

P7120.book Page 7 Monday, October 10, 2005 4:38 PM

Headphone/Line-Out Jack
The headphone/line-out jack allows you to connect headphones or powered external speakers. *(See Headphone/Line-Out Jack on page 43 for more information)*

PC Card Eject Button
The PC Card Eject button allows you to remove a card from the PC Card slot. *(See Removing PC Cards on page 37 for more information)*

P7120.book Page 8 Monday, October 10, 2005 4:38 PM

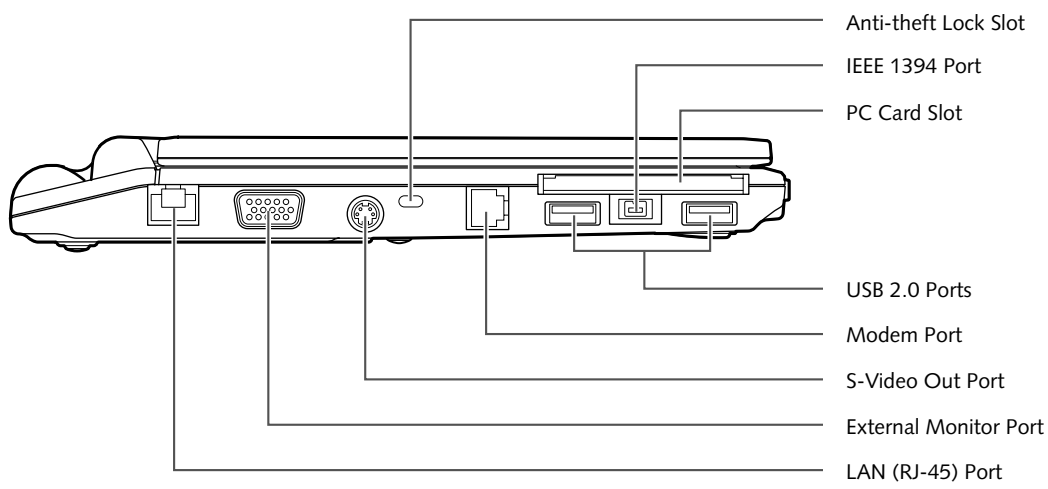

Figure 2-4 LifeBook notebook left-side panel

LEFT-SIDE PANEL COMPONENTS

The following is a brief description of your LifeBook notebook's left-side components.

Anti-theft Lock Slot

The anti-theft lock slot allows you to attach an optional physical lock-down device.

IEEE 1394 Port

The IEEE 1394 port (also known as "Firewire") is used to connect between your LifeBook and a peripheral such as a digital video camera. *(See IEEE 1394 Port on page 43 for more information)*

PC Card Slot

The PC Card Slot allows you to insert one Type II PC Card. *(See PC Cards on page 37 for more information)*

USB 2.0 Ports

The USB ports allow you to connect Universal Serial Bus 2.0 devices. There are two USB ports on the left side of the system and one on the right. *(See Universal Serial Bus Ports on page 43 for more information)*

Modem (RJ-11) Telephone Port

The Modem (RJ-11) telephone port is for attaching a telephone line to the internal multinational 56K modem. *(See Modem (RJ-11) Telephone Port on page 42 for more information)*

The internal modem is not intended for use with Digital PBX systems. Do not connect the internal modem to a Digital PBX as it may cause serious damage to the internal modem or your entire notebook. Consult your PBX manufacturer's documentation for details. Some hotels have Digital PBX systems. Be sure to find out BEFORE you connect your modem.

The internal multinational modem is designed to the ITU-T V.90 standard. Its maximum speed of 53000bps is the highest allowed by FCC, and its actual connection rate depends on the line conditions. The maximum speed is 33600bps at upload.

For additional information about the multinational modem, refer to the Fujitsu web site at: us.fujitsu.com/computers.

S-Video Out Port

The S-video out port is used to transmit a higher resolution video signal to a compatible TV or VCR. *(See S-Video Out Port (TV Out) on page 43 for more information)*

External Monitor Port

The external monitor port allows you to connect your LifeBook notebook to an external monitor. *(See External Video Port on page 44 for more information)*

LAN (RJ-45) Port

The internal LAN (RJ-45) port is used for an internal Fast Ethernet (10/100 Base-TX) connection. *(See Internal LAN (RJ-45) Port on page 42 for more information)*

P7120.book Page 9 Monday, October 10, 2005 4:38 PM

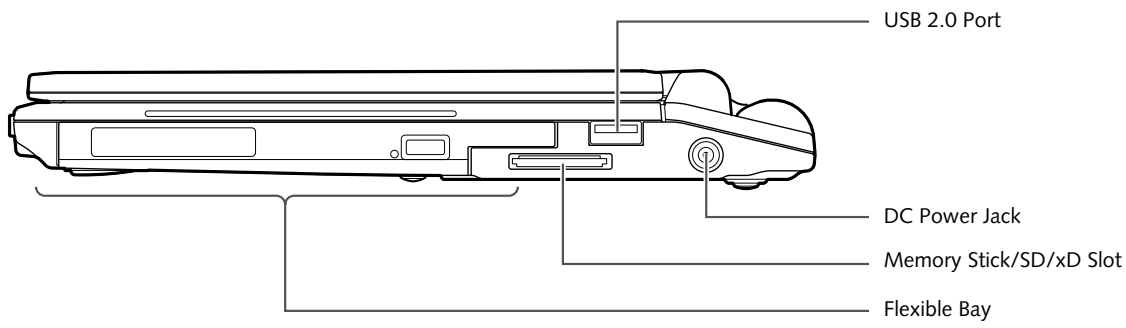

Figure 2-5 LifeBook notebook right-side panel

RIGHT-SIDE PANEL COMPONENTS

The following is a brief description of your LifeBook notebook's right-side components.

USB 2.0 Port

The USB ports allow you to connect Universal Serial Bus 2.0 devices. There are two USB ports on the left side of the system and one on the right. *(See Universal Serial Bus Ports on page 43 for more information)*

DC Power Jack

The DC power jack allows you to plug in the AC adapter or the optional Auto/Airline adapter to power your notebook and charge the internal Lithium ion battery.

Memory Stick/SD/xD Card Slot

The Memory Stick/Secure Digital (SD)/xD Picture card slot allows you to insert a flash memory card for data storage. This architecture allows you to transfer data between a variety of different digital devices. *(See Installing Memory Stick/SD/xD Cards on page 38 for more information)*

Flexible Bay

The Flexible Bay can accommodate either the standard DVD/CD-RW Drive or an optional modular bay battery. If neither device is installed, the weight saver should be installed. *(See Flexible Bay Devices on page 18 for more information)*

P7120.book Page 10 Monday, October 10, 2005 4:38 PM

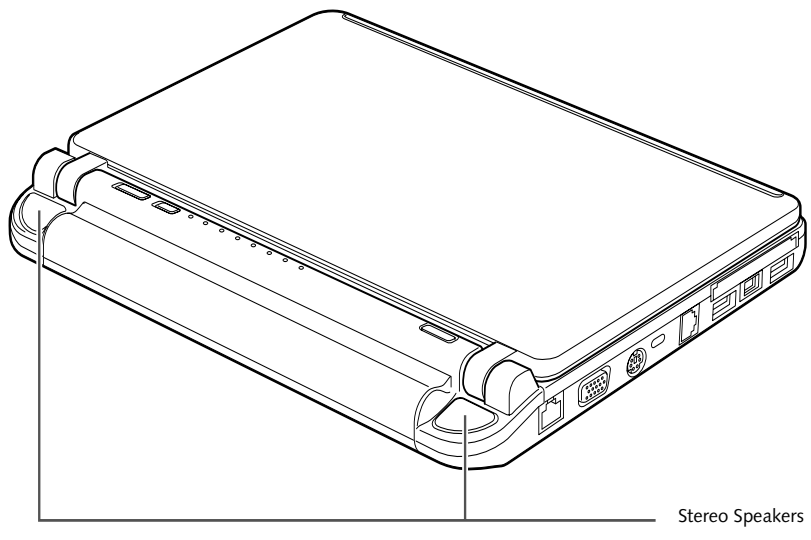

Figure 2-6 LifeBook notebook rear panel

REAR PANEL COMPONENTS

The following is a brief description of your LifeBook notebook's rear components.

Stereo Speakers

The built-in dual box speakers allow for stereo sound.

P7120.book Page 11 Monday, October 10, 2005 4:38 PM

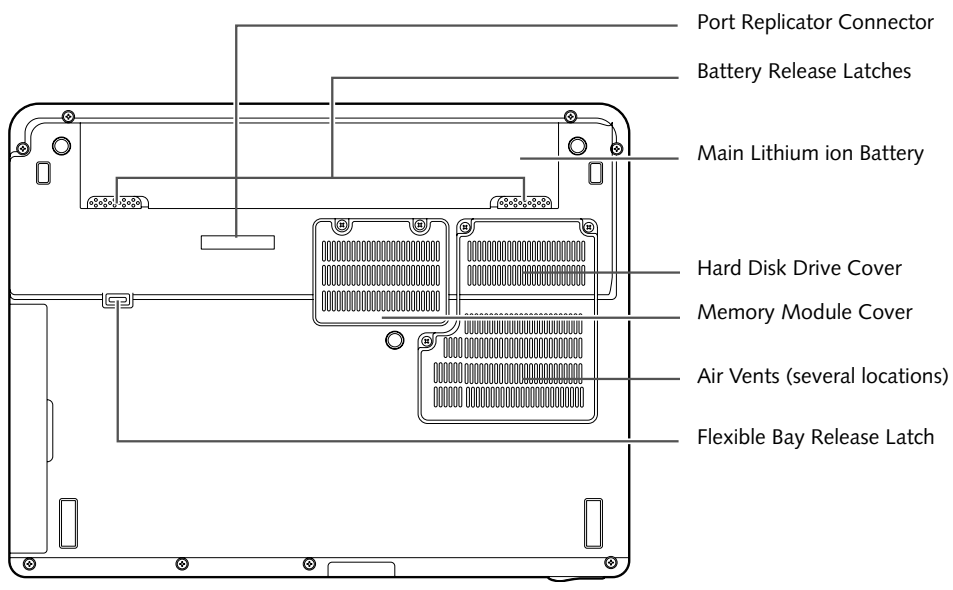

Figure 2-7 LifeBook notebook bottom panel

BOTTOM COMPONENTS

The following is a brief description of your LifeBook notebook's bottom panel components.

Port Replicator Connector

The port replicator connector docks with the connector on the optional port replicator to provide additional connectivity.

Battery Release Latches

Slide the battery releases to unlatch the battery.

Lithium ion Battery

The internal Lithium ion battery can be installed in the battery bay by aligning it with the slides and pushing it into place. The battery can be removed when swapping with a charged battery, or when the computer is to be stored for a long period of time. *(See Lithium ion Battery on page 31 for more information)*

Hard Disk Drive Cover

Removable cover over the hard disk drive. Under ordinary circumstances, it should not be necessary to remove this cover.

Memory Module Cover

Removable cover over the memory modules. *(See Removing a Memory Module on page 40 for more information)*

Flexible Bay Release Latch

The Flexible Bay Release Latch releases the flexible bay device for removal. *(See Removing and Installing Modular Devices on page 18 for more information)*

Air Vents

The air vents allow for proper cooling of the system while it is operating.

To protect your notebook from damage and to optimize system performance, be sure to **keep all air all vents unobstructed, clean, and clear of debris**. This may require periodic cleaning, depending upon the environment in which the system is used.

Do not operate the notebook in areas where the air vents can be obstructed, such as in tight enclosures or on soft surfaces like a bed or cushion.

P7120.book Page 12 Monday, October 10, 2005 4:38 PM

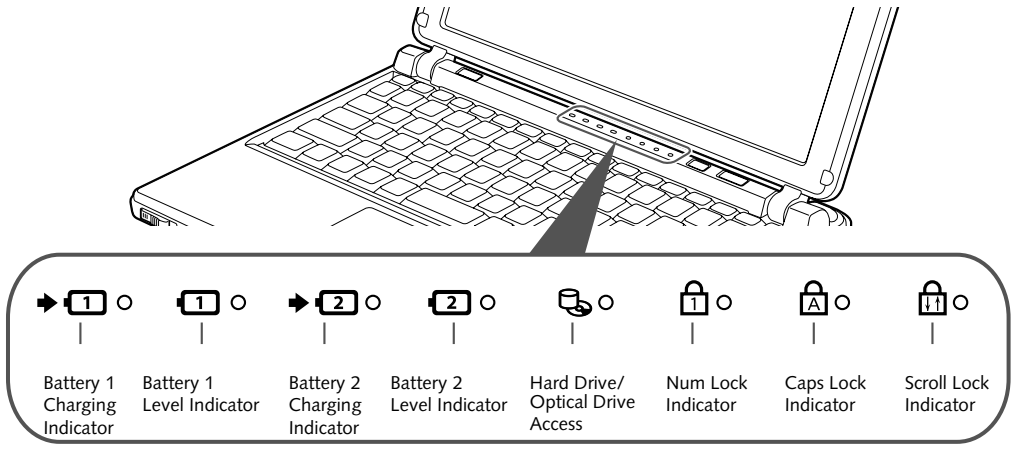

Figure 2-8 Status Indicator Panel

Status Indicator Panel

The Status Indicator displays LEDs adjacent to symbols that correspond with specific components of your LifeBook notebook. These lights tell you how each of those components is operating. *(Figure 2-8)*. When you turn off the system, all indicators will go off, except when the battery is being charged.

BATTERY CHARGING INDICATORS

When the AC adapter is connected to your system, these indicators show the status of the specified battery charging (either the primary battery 1 or modular battery 2), as follows:

- **Green, solid:** The battery is either fully charged or the AC adapter is connected and there is no battery pack installed.
- **Orange, solid:** The battery pack is charging.
- **Orange, blinking:** Charging is suspended due to excessively high or low battery temperature.
- **Off:** No AC adapter is connected.

BATTERY LEVEL INDICATORS

The Battery Level indicators display the charge level of the indicated battery pack, as follows:

- **Green, solid:** Battery is between 50% and 100% charged.
- **Orange, solid:** Battery is between 13% and 49% charged.
- **Red, solid:** Battery is between 0% and 12% charged.
- **Orange, blinking:** Blinks during battery status measurement (Four seconds after the battery is installed).
- **Red, blinking:** There is a problem with the battery.
- **Off**: There is no battery installed.

- If the battery pack is installed while the power is turned off, the battery level indicator will display the charge level for five seconds after it blinks orange.
- If the AC adapter is not connected or the battery pack is not fully charged when the computer is switched to standby mode, the indicator will blink. The LED blinks at the rate of one second on/five seconds off.

- Batteries subjected to shocks, vibration or extreme temperatures can be permanently damaged.
- A shorted battery is damaged and must be replaced.

HARD DISK/OPTICAL DRIVE ACCESS INDICATOR

The Hard Disk/optical drive access indicator lights when the hard disk or optical drive is being accessed. To prevent corruption of data, do not press the power button when the hard disk/optical drive access indicator is lit.

NUM LOCK INDICATOR

The Num Lock indicator states that the integral keyboard is set in ten-key numeric keypad mode.

CAPS LOCK INDICATOR

The Caps Lock indicator states that your keyboard is set to type in all capital letters.

SCROLL LOCK INDICATOR

The Scroll Lock indicator states that your scroll lock is active.

P7120.book Page 13 Monday, October 10, 2005 4:38 PM

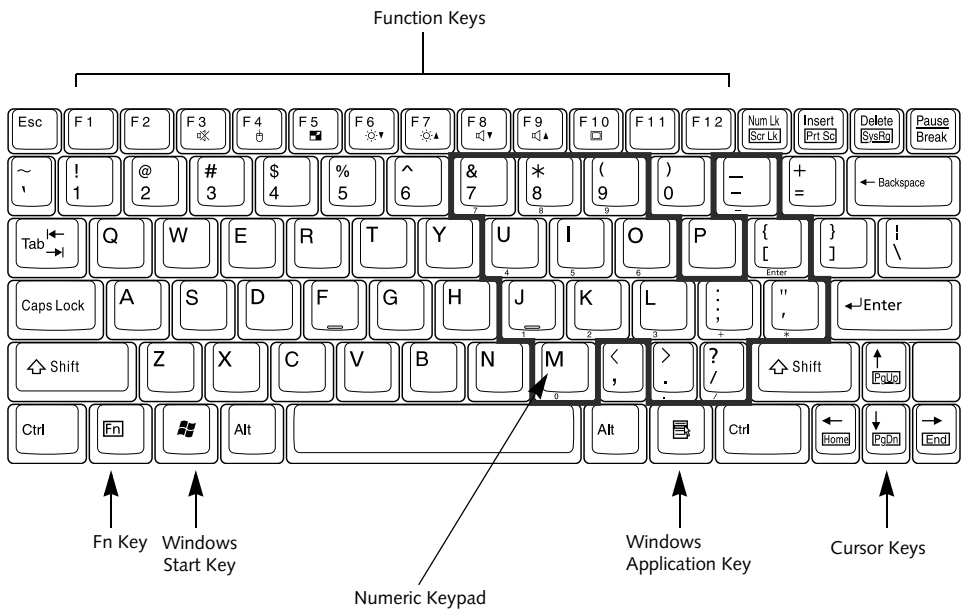

Figure 2-9 Keyboard

Keyboard

USING THE KEYBOARD

Your Fujitsu LifeBook notebook has an integral 82-key keyboard. The keys perform all the standard functions of a 101-key keyboard, including the Windows keys and other special function keys. This section describes the following keys. *(Figure 2-9)*

- Numeric keypad: Your notebook allows certain keys to serve dual purposes, both as standard characters and as numeric and mathematical keys. The ability to toggle between the standard character and numerical keys is controlled through the [NumLk] key.
- Cursor keys: Your keyboard contains four arrow keys for moving the cursor or insertion point to the right, left, up, or down within windows, applications and documents.
- Function keys: The keys labeled [F1] through [F12], are used in conjunction with the [Fn] key to produce special actions that vary depending on what program is running.
- Windows keys: These keys work with your Windows operating system and function the same as the onscreen Start menu button, or the right button on your pointing device.

NUMERIC KEYPAD

Certain keys on the keyboard perform dual functions as both standard character keys and numeric keypad keys. NumLk can be activated by pressing the [NumLk] keys. Turning off the NumLk feature is done the same way. Once this feature is activated you can enter numerals 0 through 9, perform addition (+), subtraction (-), multiplication (*), or division (/), and enter decimal points (.) using the keys designated as ten-key function keys. The keys in the numeric keypad are marked on the front edge of the key to indicate their secondary functions.

WINDOWS KEYS

Your LifeBook notebook has two Windows keys, consisting of a Start key and an Application key. The Start key displays the Start menu. This button functions the same as your onscreen Start menu button. The Application key functions the same as your right mouse button and displays shortcut menus for the selected item. (Please refer to your Windows documentation for additional information regarding the Windows keys.)

CURSOR KEYS

The cursor keys are the four arrow keys on the keyboard which allow you to move the cursor up, down, left and right in applications. In programs such as Windows Explorer, it moves the “focus” (selects the next item up, down, left, or right).

P7120.book Page 14 Monday, October 10, 2005 4:38 PM

FUNCTION KEYS

Your LifeBook notebook has 12 function keys, F1 through F12. The functions assigned to these keys differ for each application. You should refer to your software documentation to find out how these keys are used.

The [Fn] key provides extended functions for the notebook and is always used in conjunction with another key.

- [Fn+F3]: Pressing [F3] while holding [Fn] will toggle the Audio Mute on and off.
- [Fn+F4]: Pressing [F4] while holding [Fn] will toggle the Quick Point feature on and off. Note that the [Fn+F4] combination only works if Manual Setting is selected in the BIOS. (See "Entering the BIOS Setup Utility" on page 25)
- [Fn+F5]: Pressing [F5] while holding [Fn] allows you to toggle between video compensation and no compensation. (Video compensation controls spacing on the display. When it is enabled, displays with 1024 x 768 or 800 x 600 pixel resolution will still cover the entire screen.) Note that this function is only applicable if Compensation is disabled in the BIOS. *(See BIOS Setup Utility on page 25 for more information)*.
- [Fn+F6]: Pressing [F6] repeatedly while holding [Fn] will lower the brightness of your display.*
- [Fn+F7]: Pressing [F7] repeatedly while holding [Fn] will increase the brightness of the display.*
- [Fn+F8]: Pressing [F8] repeatedly while holding [Fn] will decrease the volume of your LifeBook notebook.**
- [Fn+F9]: Pressing [F9] repeatedly while holding [Fn] will increase the volume of your LifeBook notebook.**
- [Fn+F10]: Pressing [F10] while holding [Fn] allows you to change your selection of where to send your display video. Each time you press the combination of keys you will step to the next choice. The choices, in order, are: built-in display panel only, both built-in display panel and external monitor or external monitor only.

* There are eight brightness levels.

** There are 26 audio levels.

P7120.book Page 15 Monday, October 10, 2005 4:38 PM

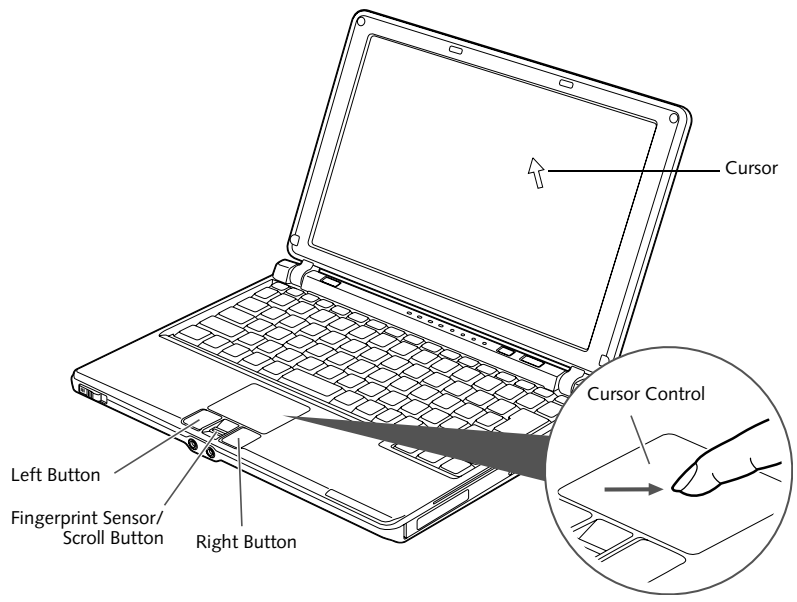

Figure 2-11 Touchpad pointing device

Touchpad Pointing Device

The Touchpad pointing device comes built into your LifeBook notebook. It is used to control the movement of the pointer to select items on your display panel. The Touchpad is composed of a cursor control, a left and right button, and a scrolling button. The cursor control works the same way a mouse does, and moves the cursor around the display. It only requires light pressure with the tip of your finger. The left and right buttons function the same as mouse buttons. The actual functionality of the buttons may vary depending on the application that is being used. The scrolling button allows you to navigate quickly through pages, without having to use the scroll bars. *(Figure 2-15)*

> The scrolling button also acts as a fingerprint sensor. For information on using the optional fingerprint sensor, refer to "Fingerprint Sensor Device" on page 99.

CLICKING

Clicking means pushing and releasing a button. To left-click, move the cursor to the item you wish to select, press the left button once, and then immediately release it. To right-click, move the mouse cursor to the item you wish to select, press the right button once, and then immediately release it. You also have the option to perform the clicking operation by tapping lightly on the Touchpad once. *(Figure 2-12)*

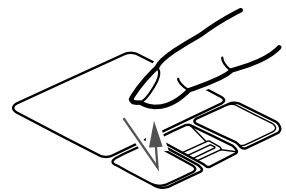

Figure 2-12 Clicking

DOUBLE-CLICKING

Double-clicking means pushing and releasing the left button twice in rapid succession. This procedure does not function with the right button. To double-click, move the cursor to the item you wish to select, press the left button twice, and then immediately release it. You also have the option to perform the double-click operation by tapping lightly on the Touchpad twice. *(Figure 2-13)*

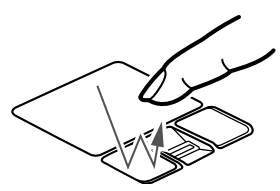

Figure 2-13 Double-clicking

P7120.book Page 16 Monday, October 10, 2005 4:38 PM

- If the interval between clicks is too long, the double-click will not be executed.
- Parameters for the Touchpad can be adjusted from the Mouse Properties dialog box located in the Windows Control Panel.

DRAGGING

Dragging means pressing and holding the left button, while moving the cursor. To drag, move the cursor to the item you wish to move. Press and hold the left button while moving the item to its new location and then release it. Dragging can also be done using the Touchpad. First, tap the Touchpad twice over the item you wish to move making sure to leave your finger on the pad after the final tap. Next, move the object to its new location by moving your finger across the Touchpad, and then release your finger. *(Figure 2-14)*

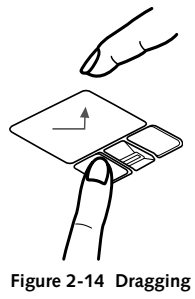

Figure 2-14 Dragging

SCROLLING

Using the Scrolling button allows you to navigate through a document quickly without using the window's scroll bars. This is particularly useful when you are navigating through on-line pages. To use the Scrolling button, move your finger forward or backward across the button to scroll up or down a page. When you have reached the desired section of the page, raise your finger. *(Figure 2-15)*

Note that you can also scroll by sliding your finger up and down the right side of the touchpad. This feature is disabled by default, but you can enable it by going to Start -> Control Panel -> Mouse.

The scrolling button is also used as a fingerprint sensor. To use the fingerprint sensor device, refer to the appendix of this document. *(See Fingerprint Sensor Device on page 99 for more information)*

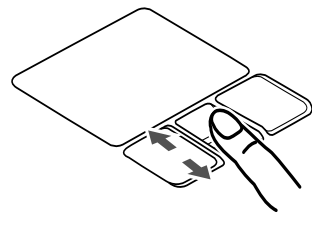

Figure 2-15 Scrolling with scrolling button

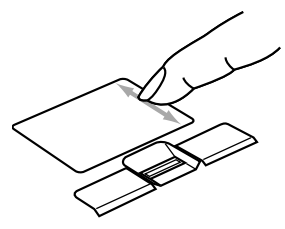

Figure 2-16 Scrolling with Touchpad

TOUCHPAD CONTROL ADJUSTMENT

If you need to change or adjust any of the touchpad control functions, you can customize them from the Mouse properties dialog box in the Control Panel. Click on Start, select Settings > Control Panel, then double-click Mouse.

P7120.book Page 17 Monday, October 10, 2005 4:38 PM

Volume Control

Your Fujitsu LifeBook notebook has multiple volume controls which interact with each other.

Any software that contains audio files will also contain a volume control of its own. If you install an external audio device that has an independent volume control, the hardware volume control and the software volume control will interact with each other. It should be noted that if you set your software volume to Off, you will override external volume control settings.

CONTROLLING THE VOLUME

The volume can be controlled in several different ways:

- Volume can be set from within the Volume Control on the Taskbar.
- Volume can be controlled with the [F8] and [F9] functions keys. Pressing [F8] repeatedly while holding [Fn] will decrease the volume of your notebook. Pressing [F9] repeatedly while holding [Fn] will increase the volume of your notebook.

There are 26 levels through which the function keys cycle.

- Volume can be controlled by many volume controls that are set within individual applications.
- Certain external audio devices you might connect to your system may have hardware volume controls.

Each source discussed above puts an upper limit on the volume level that must then be followed by the other sources.

We recommend that you experiment with the various volume controls to discover the optimal sound level.

P7120.book Page 18 Monday, October 10, 2005 4:38 PM

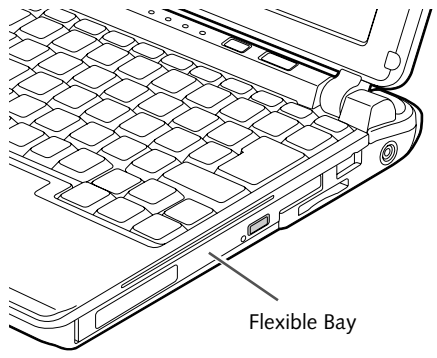

Figure 2-17 Flexible Bay

Flexible Bay Devices

Your Fujitsu LifeBook notebook contains a Flexible Bay. The Flexible Bay can accommodate a modular Dual-Layer Multi-Format DVD Writer, a modular DVD/CD-RW combo drive, a modular Lithium ion battery, or a weight saver. *(Figure 2-17)*

- Modular Dual-Layer Multi-Format DVD Writer: This allows you to access movies, software, and audio DVD/CDs and record to DVD+R DL, DVD±RW, CD-R/RW, DVD-R, and DVD-RAM discs.
- Modular DVD/CD-RW combo drive: This allows you to access movies, software, and audio DVD/CDs as well as to write to CDs.
- Modular Lithium ion battery: This is a rechargeable battery that can be used to power your LifeBook notebook when an adapter is not connected.
- Weight Saver: This is used to fill the bay when no device is installed.

REMOVING AND INSTALLING MODULAR DEVICES

To remove and install modular devices in the Flexible Bay, you can perform either a cold-swapping or hot-swapping of the device. Cold-swapping means swapping devices while your LifeBook notebook is powered off. Hot-swapping occurs when your system is powered on with a charged main battery or AC Adapter.

You should never leave your Flexible Bay empty when the notebook is in operation. If left empty, dust or foreign matter may accumulate inside the notebook.

Cold-swapping

To cold-swap modular devices in your Flexible Bay follow these easy steps:

1. Close any open files.
2. Shut down your LifeBook notebook.
3. Turn the system over and slide the release latch *(Figure 2-18)*. Pull out the Flexible Bay device from the slot.

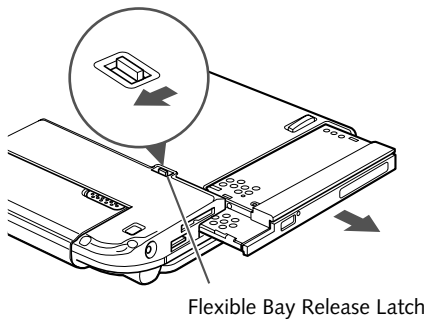

Figure 2-18 Removing a device from the Flexible Bay

Be careful when aligning and seating devices in the bay. If the fit is incorrect, you may damage the bay or the device. If the device does not move easily in the bay, remove it, and check for dirt or foreign objects. It will require a firm push to latch the device in place.

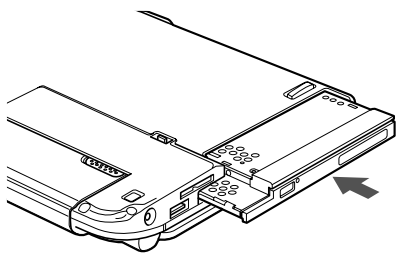

Figure 2-19 Installing a device in the Flexible Bay

4. Slide the device you are installing into your notebook until it clicks into place. *(Figure 2-19)*

P7120.book Page 19 Monday, October 10, 2005 4:38 PM

5. It is now safe to turn your notebook back on.
6. You can now access and use the device.

Your LifeBook notebook will automatically detect the new device and activate it within your system. The drive letters associated with the device will be created and listed under My Computer and Windows Explorer.

Hot-swapping

To hot-swap Flexible Bay devices while the system is powered on, follow these steps:

1. Prior to performing the hot-swap, make sure you have a charged **main** battery installed, or an **AC Adapter** is powering the system.
2. If your system is in Suspend mode, press the Suspend/Resume button to resume operation.
3. Pull out the Flexible Bay eject lever. This will push your device out slightly, allowing you to remove the device.
4. Slide your device out until it is clear of the bay. This will require light force.

Be careful when aligning and seating devices in the bay. If the fit is incorrect, you may damage the bay or the device. If the device does not move easily in the bay, remove it, and check for dirt or foreign objects. It will require a firm push to latch the device in place.

5. Slide the device you are installing into your notebook until it clicks into place.
6.. You can now access and use the device.

Your LifeBook notebook will automatically detect the new device and activate it within your system. The drive letters associated with the device will be created and listed under My Computer and Windows Explorer.

P7120.book Page 20 Monday, October 10, 2005 4:38 PM

3
Getting Started

P7120.book Page 22 Monday, October 10, 2005 4:38 PM

P7120.book Page 23 Monday, October 10, 2005 4:38 PM

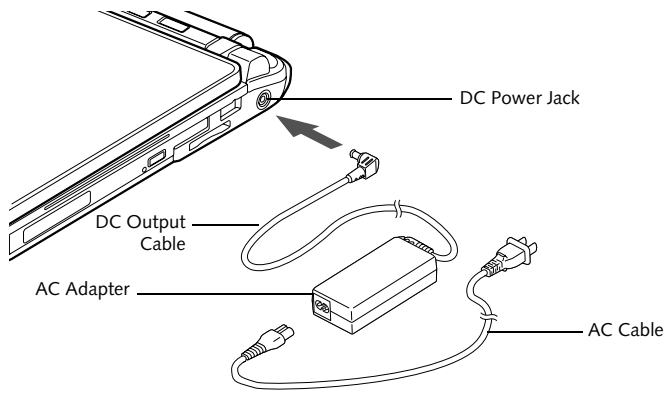

Figure 3-1 Connecting the AC Adapter

Power Sources

Your Fujitsu LifeBook notebook has four possible power sources: a primary Lithium ion battery, an optional modular Lithium ion battery, an AC adapter, or an optional Auto/Airline adapter.

CONNECTING THE POWER ADAPTERS

The AC adapter or optional Auto/Airline adapter provides power for operating your notebook and charging the batteries.

Connecting the AC Adapter

1. Plug the DC output cable into the DC power jack of your LifeBook notebook.
2. Plug the AC adapter into an AC electrical outlet. *(Figure 3-1)*

Connecting the Optional Auto/Airline Adapter

1. Plug the DC output cable into the DC power jack on your notebook.
2. Plug the Auto/Airline adapter into the cigarette lighter of an automobile with the ignition key in the On or Accessories position.

   OR
3. Plug the Auto/Airline adapter into the DC power jack on an airplane seat.

Switching from AC Adapter Power or the Auto/Airline Adapter to Battery Power

1. Be sure that you have at least one charged battery installed.
2. Remove the AC adapter or the Auto/Airline adapter.

The Lithium ion battery is not charged upon purchase. Initially, you will need to connect either the AC adapter or the Auto/Airline adapter to use your notebook.

P7120.book Page 24 Monday, October 10, 2005 4:38 PM

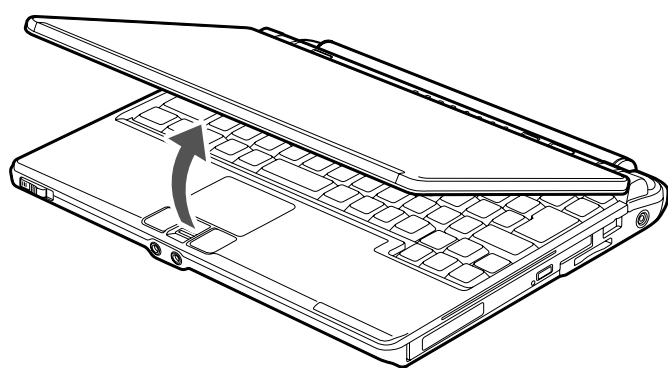

Figure 3-2 Opening the Display Panel

Display Panel

Your Fujitsu LifeBook notebook contains a display panel that is backlit for easier viewing in bright environments and maintains top resolution through the use of active-matrix technology.

OPENING THE DISPLAY PANEL

Lift the display backwards, being careful not to touch the screen, until it is at a comfortable viewing angle. *(Figure 3-2)*

ADJUSTING DISPLAY PANEL BRIGHTNESS

Once you have turned on your LifeBook notebook, you may want to adjust the brightness level of the screen to a more comfortable viewing level. The brightness can be adjusted to eight different levels. There are two ways to adjust the brightness, by using the keyboard or the power management utility.

Using the Keyboard

Adjusting the brightness using the keyboard changes the setting only temporarily.

- [Fn+F6]: Pressing repeatedly will lower the brightness of your display.
- [Fn+F7]: Pressing repeatedly will increase the brightness of the display.

CLOSING THE DISPLAY PANEL

Holding the edge of your display panel, pull it forward until it is flush with the body of your LifeBook notebook.

P7120.book Page 25 Monday, October 10, 2005 4:38 PM

Starting Your LifeBook Notebook

POWER ON

Suspend/Resume/Power On button

The Suspend/Resume/Power On button is used to turn on your LifeBook notebook from its off state. Once you have connected your AC adapter or charged the internal Lithium ion Battery, you can power on your notebook.

When you turn on your LifeBook notebook be sure you have a battery installed and charged, or that the AC or Auto/Airline adapter is connected and has power.

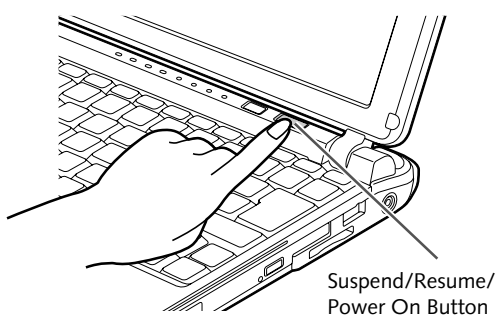

Figure 3-3 Pressing the suspend/resume/power button

Press the Suspend/Resume/Power On button that is adjacent to the status indicator panel *(Figure 3-3)*. When you are done working you can either leave your LifeBook notebook in Suspend mode, *(See Suspend Mode on page 27 for more information)*, or you can turn it off. *(See Power Off on page 28 for more information)*

Do not carry your LifeBook notebook around with the power on or subject it to shocks or vibration, as you risk damaging your notebook.

When turn on your LifeBook notebook, it will perform a Power On Self Test (POST) to check the internal parts and configuration for correct functionality. If a fault is found, your LifeBook notebook will emit an audio warning and/or an error message will be displayed. *(See Power On Self Test Messages on page 73 for more information)* Depending on the nature of the problem, you may be able to continue by starting the operating system or by entering the BIOS setup utility and revising the settings.

After satisfactory completion of the Power On Self Test (POST), your notebook will load your operating system.

Never turn off your LifeBook notebook during the Power On Self Test (POST) or it will cause an error message to be displayed the next time you turn on your LifeBook notebook. *(See Power On Self Test Messages on page 73 for more information)*

BOOT SEQUENCE

The procedure for starting-up your notebook is termed the Bootup sequence and involves your notebook's BIOS. When your LifeBook notebook is first turned on, the main system memory is empty, and it needs to find instructions to start up your notebook. This information is in the BIOS program. Each time you power up or restart your notebook, it goes through a boot sequence which displays a Fujitsu logo until your operating system is loaded. During booting, your notebook is performing a standard boot sequence including a Power On Self Test (POST). When the boot sequence is completed without a failure and without a request for the BIOS Setup Utility, the system displays the operating system's opening screen.

The boot sequence is executed when:

- You turn on the power to your LifeBook notebook.
- You restart your notebook from the Windows Shut Down dialog box.
- The software initiates a system restart. Example: When you install a new application.
- You reset the system by pressing the three keys [CTRL+ALT+DEL].

BIOS SETUP UTILITY

The BIOS Setup Utility is a program that sets up the operating environment for your LifeBook notebook. Your BIOS is set at the factory for normal operating conditions, therefore there is no need to set or change the BIOS' environment to operate your notebook.

The BIOS Setup Utility configures:

- Device control feature parameters, such as changing I/O addresses and boot devices.
- System Data Security feature parameters, such as passwords.

Entering the BIOS Setup Utility

To enter the BIOS Setup Utility do the following:

1. Turn on or restart your LifeBook notebook.
2. Press the [F2] key once the Fujitsu logo appears on the screen. This will open the main menu of the BIOS Setup Utility with the current settings displayed.
3. Press the [RIGHT ARROW] or [LEFT ARROW] key to scroll through the other setup menus to review or alter the current settings.

P7120.book Page 26 Monday, October 10, 2005 4:38 PM

BIOS Guide

A guide to your notebook's BIOS is available online. Please visit our service and support Web site at **http://www.computers.us.fujitsu.com/support**. Once there, select Support, then select Notebooks under User's Guides. Select LifeBook BIOS Guides from the pull-down menu for your LifeBook series. If you are unsure of your notebook's BIOS number, refer to your packing slip.

BOOTING THE SYSTEM

We strongly recommend that you not attach any external devices and do not put a DVD/CD in your drive until you have gone through the initial power on sequence.

When you turn on your LifeBook notebook for the first time, it will display a Fujitsu logo on the screen. If you do nothing the system will load the operating system, and then the Windows Welcome will begin.

Registering Windows with Microsoft

In order to ensure that you receive the most benefits from the Windows operating system, it should be registered the first time you use it.

After you receive the Windows Welcome screen, you will be prompted to enter registration information in the following order.

First of all, you will need to read and accept the End User License Agreements (EULAs). After accepting the EULAs, you will be asked if you want to enable the Automatic Updates feature. Acceptance of this feature is recommended because it allows your system to be updated automatically whenever an important change becomes available for your notebook.

- If you reject the terms of the license agreement you will be asked to review the license agreement for information on returning Windows or to shut down your LifeBook notebook.
- You cannot use your LifeBook notebook until you have accepted the License Agreement. If you stop the process your notebook will return to the beginning of the Windows Welcome Process, even if you shut your notebook down and start it up again.

Several additional windows will appear, prompting you to enter a name and description for your computer, an Administrator password, and a domain name. Read the instructions on the screens carefully and fill in the information as directed.

You will then be automatically connected to the Internet, if you have an appropriate connection available. If an automatic connection is not possible, you will be asked about how you dial out from where you will be using your LifeBook notebook. If you are not connected to a phone line and plan to register at a later time, you may click the **Skip** button.

Once you are connected to the Internet, you will be asked if you wish to continue with the registration. If you select **Yes** you will then enter your name and address, and email address if desired. Click **Next** to complete registration.

REGISTERING YOUR LIFEBOOK NOTEBOOK

How do I register my LifeBook notebook?

You can register your LifeBook by going to our Web site:

us.fujitsu.com/computers

You will need to be set up with an Internet Service Provider (ISP) to register online.

INSTALLING CLICK ME!

Before installing the ClickMe! utility, be sure the wireless LAN switch is turned on.

The first time you boot up your system, you will see an icon called Click Me! in the Start menu. **We highly recommend that you install the ClickMe! utility the first time you boot up.** When you click the Click Me! icon, your system will automatically build the icon tray in the bottom right of the screen. These icons provide links to utilities that you will frequently access., such as wireless LAN software provided by the wireless LAN manufacturer.

There may be additional third-party applications that are not installed by the ClickMe! utility. For more information, refer to your Getting Started Guide.

FUJITSU DRIVER UPDATE UTILITY

Your system has a convenient tool called the Fujitsu Driver Update (FDU) utility. With FDU, you can choose to automatically or manually go to the Fujitsu site to check for new updates for your system. For more information about the FDU utility, refer to "Automatically Downloading Driver Updates" on page 62.

P7120.book Page 27 Monday, October 10, 2005 4:38 PM

Power Management

Your Fujitsu LifeBook notebook has many options and features for conserving battery power. Some of these features are automatic and need no user intervention, such as those for the internal modem. However, others depend on the parameters you set to best suit your operating conditions, such as those for the display brightness. Internal power management for your notebook may be controlled from settings made in your operating system, pre-bundled power management application, or from settings made in BIOS setup utility.

Besides the options available for conserving battery power, there are also some things that you can do to prevent your battery from running down as quickly. For example, you can create an appropriate power saving profile, put your notebook into Suspend mode when it is not performing an operation, and you can limit the use of high power devices. As with all mobile, battery powered computers, there is a trade-off between performance and power savings.

SUSPEND/RESUME/POWER ON BUTTON

When your LifeBook notebook is active, the Suspend/Resume/Power On button can be used to manually put your notebook into Suspend mode. Push the button when your notebook is active, but not actively accessing anything, and immediately release the button. You will hear two short beeps and your system will enter Suspend mode. *(See figure 2-3 on page 6 for location)*

If your LifeBook notebook is suspended, pushing the Suspend/Resume/Power On button will return your notebook to active operation. You can tell whether or not your system is in Suspend mode by looking at the Power indicator. *(See figure 2-3 on page 6)* If the indicator is visible and not flashing, your notebook is fully operational. If the indicator is both visible and flashing, your notebook is in Suspend mode. If the indicator is not visible at all, the power is off or your notebook is in Hibernation mode.

ECO BUTTON

The ECO button is located to the right of the status indicator panel. The button is designed to extend system power by reducing the LCD brightness, shutting down the optical drive, PC Card, and IEEE 1394 functionality, and enabling the hard disk drive's auto power off mode. Pressing the button again restores those functions.

The settings for the ECO button can be changed in the Power Saving Utility Setup window. To open the window, use one of the three following methods:

- Click [Start] -> [All Programs] -> [Power Saving Utility] -> [Setup - Power Saving Utility], or,
- Click [Start] -> [Control Panel] -> [Performance and Maintenance] -> [Power Options]. Click the Power Saving Utility tab and click [Change Settings] button, or,
- Double-click the Power Saving Utility icon in the system tray at the bottom right of the screen. The Power Saving Utility Setting window will appear.

SUSPEND MODE

Suspend or Standby mode in Windows saves the contents of your LifeBook notebook's system memory during periods of inactivity by maintaining power to critical parts. This mode will turn off the CPU, the display, the hard drive, and all of the other internal components except those necessary to maintain system memory and allow for restarting. Your notebook can be put in Suspend mode by:

- Pressing the Suspend/Resume/Power On button when your system is turned on.
- Selecting Standby from the Windows Shut Down menu.
- Timing out from lack of activity.
- Allowing the battery to reach the Dead Battery Warning condition.

You can change the actions the computer takes when the lid is closed or buttons are pressed by clicking [Start] -> Control Panel. Double-click the Power Options icon and select the Advanced tab.

Your LifeBook notebook's system memory typically stores the file(s) on which you are working, open application(s) information, and any other data required to support the operation(s) in progress. When you resume operation from Suspend mode, your notebook will return to the point where it left off. You must use the Suspend/Resume/Power On button to resume operation, and there must be an adequate power source available, or your notebook will not resume.

- If you are running your LifeBook notebook on battery power, be aware that the battery continues to discharge while your notebook is in Suspend mode, though not as fast as when fully operational.
- Disabling the Suspend/Resume/Power On button prevents it from being used to put your LifeBook notebook in Suspend or Hibernation mode. The resume function of the button cannot be disabled.
- If your LifeBook notebook is actively accessing information when you enter the Suspend or Hibernation mode, changes to open files are not lost. The files are left open and memory is kept active during Suspend mode or the memory is transferred to the internal hard drive during Hibernation mode.

P7120.book Page 28 Monday, October 10, 2005 4:38 PM

The Suspend or Hibernation mode should not be used with certain PC Cards. Check your PC Card documentation for more information.

When PC Cards or external devices are in use, Hibernation mode cannot return to the exact state prior to suspension, because all of the peripheral devices will be re-initialized when the system restarts.

HIBERNATION FEATURE

The Hibernation feature saves the contents of your LifeBook notebook's system memory to the hard drive as a part of the Suspend/Resume mode. You can enable or disable this feature.

Enable or Disable the Hibernation Feature

The default settings is not enabled. To enable or disable the Hibernation feature follow these easy steps:

1. From the **Start** menu, select **Settings**, and then select **Control Panel**.
2. From the **Control Panel** select **Power Options**.
3. Select the **Hibernation** tab. Select the box to enable or disable this feature.

Using the Hibernation Feature

1. From the **Start** menu, select **Settings**, and then select **Control Panel**.
2. From the **Control Panel** select **Power Options**.
3. Select the **Advanced** tab. Select **Hibernate** from the pull down menu for Power buttons.

You can also enter Hibernate mode by clicking Start -> Shut Down..., then selecting Hibernate from the dropdown menu.

DISPLAY TIMEOUT

The Video Timeout is one of the power management parameters. This feature saves power by turning off the display if there is no keyboard or pointer activity for the user selected timeout period. Any keyboard or pointer activity will cause the display to restart automatically. This feature is independent of the Suspend/Resume button and can be enabled and disabled in Windows and BIOS setup utility.

HARD DISK TIMEOUT

The Hard Disk Timeout is another one of the power management parameters. This feature saves power by turning off the hard drive if there is no hard drive activity for the user selected timeout period. Any attempt to access the hard drive will cause it to restart automatically. This feature is independent of the Suspend/Resume button and can be enabled and disabled in Windows and BIOS setup utility.

WINDOWS POWER MANAGEMENT

The Power Management icon located in the Windows Control Panel allows you to configure some of the power management settings. For example, you can use the Power Management to set the timeout values for turning off the display and hard disks whether you are running the notebook on battery power or one of the adapters. The settings may also be changed in the BIOS.

RESTARTING THE SYSTEM

If your system is on and you need to restart it, be sure that you use the following procedure.

1. Click the **Start** button, and then click **Shut Down**.
2. Select the **Restart** option from within the Windows Shut Down dialog box.
3. Click **OK** to restart your notebook. Your notebook will shut down and then reboot.

Turning off your LifeBook notebook without exiting Windows or turning on your notebook within 10 seconds of the notebook being shut off may cause an error when you start the next time.

POWER OFF

Before turning off the power, check that the Hard Drive, DVD, CD-ROM, CD-RW, PC Card and the Floppy Disk Drive Access indicators are all Off. *(See figure 2-3 on page 6)* If you turn off the power while accessing a disk or PC Card there is a risk of data loss. To ensure that your notebook shuts down without error, use the Windows shut down procedure.

Be sure to close all files, exit all applications, and shut down your operating system prior to turning off the power. If files are open when you turn the power off, you will lose any changes that have not been saved, and may cause disk errors.

Using the correct procedure to shut down from Windows allows your notebook to complete its operations and turn off power in the proper sequence to avoid errors. The proper sequence is:

1. Click the **Start** button, and then click **Shut Down**.
2. Select the **Shut Down** option from within the Windows Shut Down dialog box.
3. Click **OK** to shut down your notebook.

If you are going to store your notebook for a month or more see Care and Maintenance Section.

4

User-Installable Features

P7120.book Page 30 Monday, October 10, 2005 4:38 PM

P7120.book Page 31 Monday, October 10, 2005 4:38 PM

Lithium ion Battery

Your LifeBook notebook has a Lithium ion battery (and possibly an optional modular battery) that provides power for operating your notebook when no external power source is available. The battery is durable and long lasting, but should not be exposed to extreme temperatures, high voltages, chemicals, or other hazards. The Lithium ion battery operating time may become shorter if it is used under the following conditions:

- When used at temperatures that exceed a low of 5°C (41°F) or a high of 35°C (95°F). Extreme temperatures not only reduce charging efficiency, but can also cause battery deterioration. The charging indicator on the Status Indicator panel will flash red for the affected battery (battery 1 or 2) when you try to charge a battery that is outside of operating temperature range. *(See Battery Charging Indicators on page 12 for more information)*
- When using a high current device such as a modem, DVD/CD-RW drive, or the hard drive, using the AC adapter will conserve your battery life.

Do not leave a faulty battery in your LifeBook notebook. It may damage your AC adapter, optional Auto/Airline adapter, another battery or your notebook itself. It may also prevent operation of your notebook by draining all available current into the bad battery.

- Battery life will vary based on screen brightness, applications, features, power management settings, battery condition and other customer preferences. DVD, CD-RW, CD-ROM, or hard drive usage may also have a significant impact on battery life. The battery charging capacity is reduced as the battery ages. If your battery is running low quickly, you should replace it with a new one.
- Under federal, state, or local law it may be illegal to dispose of batteries by putting them in the trash. Take care of our environment by disposing of batteries properly. Check with your local government authority for information on recycling or disposing of old batteries. If you cannot find this information elsewhere, contact your support representative at 1-800-8Fujitsu (1-800-838-5487)

RECHARGING THE BATTERIES

If you want to know the condition of the primary Lithium ion battery, check the Battery Level 1 indicator located on the Status Indicator panel. The indicator changes as the battery level changes. If you want to know the condition of the secondary modular Lithium ion battery, check the Battery Level 2 indicator located on the Status Indicator panel.

The Lithium ion battery is recharged internally using the AC adapter or Auto/Airline adapter. To recharge the battery make sure the battery that needs to be charged is installed in your LifeBook notebook and connect the AC or Auto/Airline adapter.

Make sure that the Battery Charging indicator and the percentage charge is shown inside the Battery Level icon on the Status Indicator Panel. *(See Battery Charging Indicators on page 12 for more information)*

There is no memory effect on the Lithium ion battery therefore you do not need to discharge the battery completely before recharging. The charge times will be significantly longer if your notebook is in use while the battery is charging.

If you want to charge the battery more quickly, put your notebook into Suspend mode, or turn it off while the adapter is charging the battery. *(See Power Management on page 27 for more information)*

Using heavy current devices such as Modem or frequent DVD/CD-RW/CD-ROM accesses may prevent charging completely.

Low Battery State

When the battery is running low, a low battery notification message will appear. If you do not respond to the low battery message, the batteries will continue to discharge until they are too low to operate. When this happens, your notebook will go into Suspend mode. There is no guarantee that your data will be saved once the notebook reaches this point.

P7120.book Page 32 Monday, October 10, 2005 4:38 PM

- Once the low battery notification message appears, you need to save all your active data and put your system into Suspend mode until you can provide a new power source. You should provide a charged battery, AC power adapter, or Auto/Airline adapter as soon as possible.
- When you are in Suspend mode there must always be at least one power source active. If you turn off the power or remove all power sources while your LifeBook notebook is in Suspend mode, any data that has not been saved to the hard drive will be lost.

Dead Battery Suspend mode shows on the Status indicator just like the normal Suspend mode. Once your notebook goes into Dead Battery Suspend mode you will be unable to resume operation until you provide a source of power either from an adapter, or a charged battery. Once you have provided power, you will need to press the Suspend/Resume button to resume operation.

In Dead Battery Suspend mode, your data can be maintained for some time, but if a power source is not provided promptly, the charging indicator will stop flashing and go out, meaning that you have lost the data that was not stored. Once you provide power, you can continue to use your notebook while an adapter is charging the battery.

Shorted Batteries

The Status Indicator panel battery charging icons will blink red to indicate a shorted battery or battery problem. This indicates that the battery is damaged and must be replaced so it does not damage any other parts of your LifeBook notebook.

REPLACING THE BATTERY

With the purchase of an additional battery, you can have a fully charged spare to swap with one that is not charged.

Swapping Batteries when Additional Power Source is not Available

To swap batteries in your battery bay when you don't have another power source available (such as an AC Adapter or charged modular battery), follow these easy steps: *(Figure 4-1)*

1. Have a charged battery ready to install.
2. Shut down your notebook.
3. Press and hold the battery release latches to open the bay. *(Figure 4-1)*

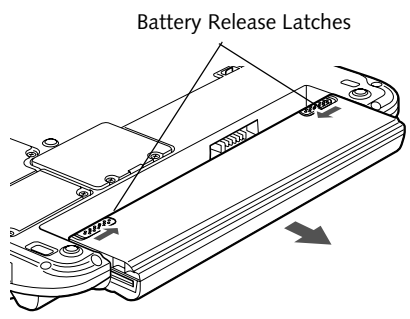

Figure 4-1 Removing the Battery

4. Remove the battery from the bay.
5. Place the new battery into the bay. *(Figure 4-2)*
6. Verify that the battery bay latches click into place.

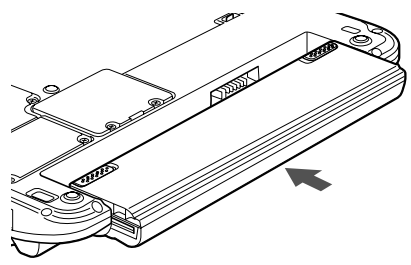

Figure 4-2 Installing a battery

Swapping Batteries when another Power Source is available

To swap batteries in your battery bay when you have an additional power source (such as an AC Adapter or charged modular battery), follow these easy steps: *(Figure 4-1)*

1. Plug in an AC Adapter or install a fully charged modular battery in the Flexible Bay to ensure power is supplied to the system.
2. Slide and hold the battery release latches to open the bay.
3. Remove the battery from the bay.
4. Slide the new battery into the bay.
5. Verify that the battery bay latches click into place.

If the Lithium ion battery connector is not fully seated, you may not be able to use your notebook or charge your battery.

P7120.book Page 33 Monday, October 10, 2005 4:38 PM

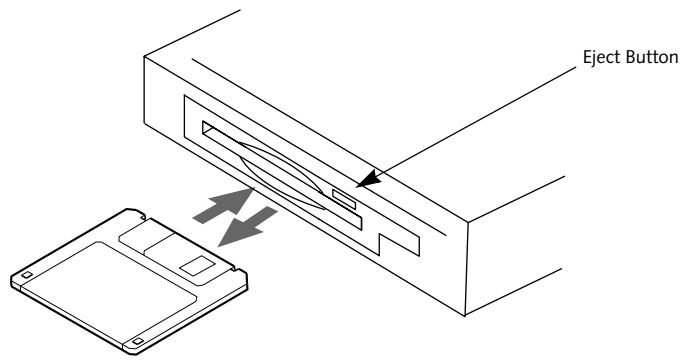

Figure 4-3 Loading/Ejecting a 3.5" Floppy Disk

External Floppy Disk Drive

Your LifeBook notebook may have an optional external floppy disk drive which can read and write information on removable 1.44MB and 720KB floppy disks.

Your LifeBook notebook is preconfigured to boot from a floppy drive. Reference the BIOS manual for further information on changing the default boot drive.

LOADING A DISK

To load a disk into your disk drive, follow these easy steps:

1. Orient the disk so that its label is facing upwards and the shutter side is pointing towards the drive. *(Figure 4-3)*
2. Push the disk into the drive until the Eject button pops out and you hear a click.

EJECTING A DISK

To eject a disk from the disk drive, follow these easy steps:

1. Check that the Floppy Disk Drive Access indicator is inactive.
2. Press the Eject button. This will push your disk partially out of the drive.
3. Remove the disk.

If you eject the disk while the Floppy Disk Drive Access indicator is active, there is a risk of damaging the data on the disk, the disk itself or even the disk drive.

PREPARING A DISK FOR USE

Before you can use a new disk, it needs to be prepared so your LifeBook notebook knows where to store information. This preparation is called formatting or initializing a disk. You will need to format new disks, unless they are preformatted. *(Please refer to your operating system manual for step-by-step instructions on formatting a disk)*

To prevent accidental erasure of the data stored on a disk, slide the "write protect" tab until a small hole is exposed. This sets the disk into a protected state where nothing can be added or removed. If you want to add or remove data on a protected disk, slide the "write protect" tab to close the small hole. *(Figure 4-4)*

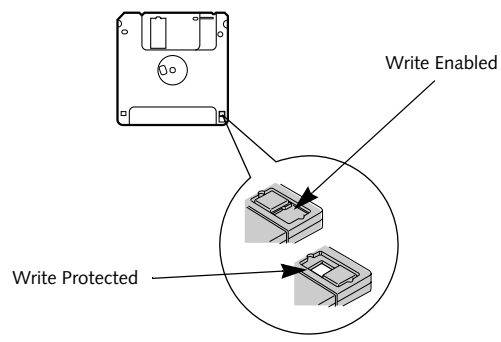

Figure 4-4 Floppy Disk Write Protect

Formatting a floppy disk that already contains data will erase all of the information on the disk.

P7120.book Page 34 Monday, October 10, 2005 4:38 PM

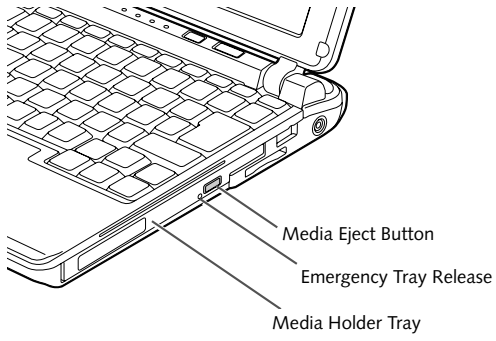

Figure 4-5 Optical Disk Drive

Optical Drive

There is a variety of media available to use with your system, depending upon the system configuration you have selected. Dual-Layer Multi-Format DVD Writer and DVD/CD-RW Combo drives are collectively known as "optical drives".

A CD-R or DVD-R disc can only be written to once; CD-RW or DVD-RW discs can be written to over and over. CD-R and CD-RW discs hold up to 700MB of data. DVD-R and DVD-RW discs hold up to 4.7 GB of data. A dual-layer (single-sided) DVD+R disc can hold up to 8.5 GB of data.

Depending upon the configuration of your LifeBook notebook, you may have one of the following drives:

- **Dual-Layer Multi-Format DVD Writer:** The Dual-Layer Multi-Format DVD Writer combines seven recordable formats in a single drive (DVD+R DL, DVD-R, DVD+R, DVD-RW, DVD+RW, DVD-RAM, CD-R, and CD-RW), making it the most versatile drive to date.
- **DVD/CD-RW combo:** A DVD/CD-RW combo drive allows you to access movie, software, data, or audio DVD/CDs, and to write data onto recordable CD-R and CD-RW discs.

Install your media player software before first using the optical drive. Refer to the applicable readme file on the Driver Applications CD-ROM.

MEDIA PLAYER SOFTWARE

Dual-Layer Multi-Format DVD Writer model only: With the Dual-Layer Multi-Format DVD Writer and media player software you can play DVD movies and music CDs on your notebook. The media player includes controls which allow you to take full advantage of the features of a DVD movie, as well as standard features such as fast forward, fast reverse, pause, etc. With this drive you can also burn onto recordable DVD+R DL, DVD-R/RW, DVD+R/RW, or CD-R/RW discs.

The Dual-Layer Multi-Format DVD Writer also supports burning and reading of DVD-RAM. (Windows XP supports burning and reading of DVD-RAM as a standard feature.)

DVD/CD-RW Combo model only: With the combo drive, you can play DVD movies, read audio CDs, and write data onto recordable CD-R or CD-RW discs.

LOADING A DVD OR CD

To load a disc into your optical drive, follow these steps *(Figure 4-6)*:

1. Push and release the eject button on the front of the optical drive to open the holder tray. The tray will come out of the notebook a short distance.
2. Gently pull the tray out until a media disc can easily be placed in the tray.

There may be a protective sheet in the tray from when it was shipped; make sure it is removed before operating the drive, otherwise you may damage the drive.

3. Place the media disc into the tray, label side up. Snap the hole in the center of the disc onto the raised circle in the center of the tray.
4. Gently push the holder tray back in until you hear a click.

If you have disabled the Auto Insert Notification Function, you will have to start the drive from your desktop, since your notebook will not automatically recognize that media has been loaded.

P7120.book Page 35 Monday, October 10, 2005 4:38 PM

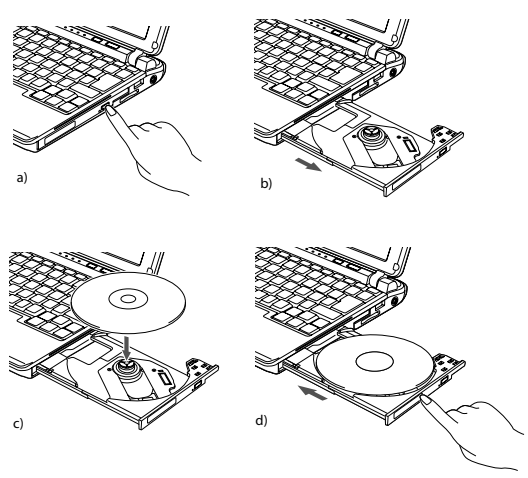

Figure 4-6 Loading/Removing Media

REMOVING MEDIA

1. Push and release the eject button on the front of the optical drive. This will stop the drive and the holder tray will come out of the notebook a short distance.
2. Gently pull the tray out until the disc can easily be removed from the tray.
3. Carefully remove the media disc from the holder tray.
4. Gently push the holder tray back in until you hear a click.

USING THE OPTICAL DRIVE SOFTWARE

Starting a DVD Movie

1. Insert the DVD movie into the optical drive of your notebook. If the CD AutoRun feature activates, skip Step 2.
2. The first time you insert a movie into the media tray, you will be prompted to select what you want the system to do when discs are inserted (i.e., start automatically or wait for a prompt). Until you make a selection, you will receive the same prompt whenever you insert a disc.

Opening the Optical Drive Control Panel

With most DVD-ROMs, you have the option of altering how the movie should play and what you wish to view. You can do this by using the optical drive control panel and the mouse.

1. Right-click on the movie screen to open a dropdown menu for options.
2. Select **View,** then **Player** for all the controls available. This will open the control panel into the bottom of the screen.

Using the Optical Drive Control Panel

The optical drive software allows you to watch the movie much like a VCR player. You have the option to pause, rewind, fast-forward and stop the movie at any point.

1. To Pause the movie, click the ⏸ button.
2. To Rewind the movie, click the ◀◀ button to rewind to a specific portion of the movie, or the ⏮ button to return to the opening screen.
3. To Fast-forward the movie, click the ▶▶ button to forward to a specific portion of the movie, or the ⏭ button to jump to the ending credits.
4. To Stop the movie, click the ■ button.

Exiting the DVD/CD-RW Application

1. Click the ✕ located in the upper right corner of the title bar. This will open an optical drive dialog box.
2. Click Yes to stop and exit the movie, or No to close the optical drive dialog box and return to the movie.

USING DOLBY™ HEADPHONE

The Dolby Headphone utility lets you enjoy multi-channel sound sources, such as movies, with realistic surround sound using your *conventional* stereo headphones.

Dolby Headphone is a signal processing system that enables your stereo headphones to realistically portray the sound of a five-speaker playback system.

- Media discs which do not have the Dolby Surround 5:1 symbol will not support Dolby Headphone.
- After making changes to the Dolby Headphone feature and clicking OK, wait at least ten seconds before making another change in order to allow the system to stabilize.

To use the Dolby Headphone feature, perform the following steps:

1. Double click the InterVideo WinDVD icon on your desktop.
2. On the toolbar that appears, click the Fujitsu logo
3. Select the desired Room Filter Setting.
4. Click OK. The Dolby Headphone feature will now be enabled until you disable it selecting Disable in the Dolby Headphones menu (click on the Fujitsu logo to open it). Note that Dolby Headphone is not accessible if a DVD is not inserted.

P7120.book Page 36 Monday, October 10, 2005 4:38 PM

USING THE OPTICAL DRIVE ON BATTERY POWER

Since an optical drive consumes a lot of power, your overall battery life will be shorter when operating the drive continuously (such as watching a DVD movie) than during standard operation. Many movies run-times are longer than your LifeBook notebook can support on a single battery. If you are watching a DVD movie on battery power you may need to swap in an additional, charged battery or attach AC power during the movie to view it in its entirety.

- Prolonged use of the optical drive, such as when watching a DVD movie, will substantially reduce your notebook's battery life.
- An additional fully-charged battery is highly recommended if you will be watching DVD movies on battery power. If you don't have an additional battery, you may purchase one either on-line at **us.fujitsu.com/computers** or call 1-877-372-3473.

To Watch a Movie on Battery Power:

1. Have an additional full-charged battery or your AC adapter ready for use.
2. Start watching your DVD movie.
3. When the low battery warning occurs, immediately stop the movie and exit the DVD/CD-RW application.

If you do not stop the optical drive quickly and the LifeBook notebook attempts to auto-suspend (critical battery low state) the notebook will shut down improperly. If this occurs, you will need to install a fresh power source (either a charged battery or AC Adapter).

4. Connect an AC Adapter to your system, or install a fully charged battery in the Flexible Bay (after removing any modular devices that may be present in the bay) prior to removing the main battery.
5. Manually place your notebook into suspend mode by depressing the Suspend button then replace the discharged battery with a fully-charged battery.
6. If you removed the optical drive from the Flexible Bay in step 4, reinstall it now.
7. Resume your notebook by pressing the Suspend button again. This step is not required if you attached AC power without entering suspend mode.
8. Restart your DVD/CD-RW application and skip to the chapter of the movie you were last watching.
9. Continue watching your DVD movie.

Some shorter DVD movies may not require you to swap batteries or attach AC power to complete them. However, it is best to be prepared since actual battery life while operating the optical drive cannot be guaranteed.

AUTO INSERT NOTIFICATION FUNCTION

The Auto Insert Notification function allows your LifeBook notebook to automatically start a DVD/CD as soon as it is inserted in the optical drive and the tray is closed. Your notebook will begin playing an audio DVD/CD or will start an application if the DVD/CD includes an auto run file.

To prevent a CD from playing automatically as soon as it is inserted, refer to the related help file for your specific operating system.

EMERGENCY TRAY RELEASE

In the event that your system does not have power applied, you can still open the media tray using the end of an opened paper clip. To open the tray, insert the paper clip into the emergency tray release hole on the fact of the tray *(Figure 4-7)*. The tray will pop open.

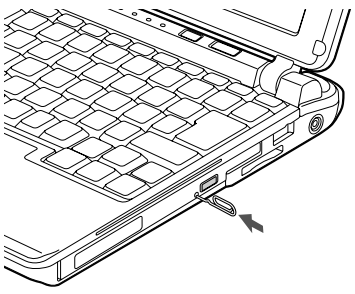

Figure 4-7 Using the Emergency Tray Release

P7120.book Page 37 Monday, October 10, 2005 4:38 PM

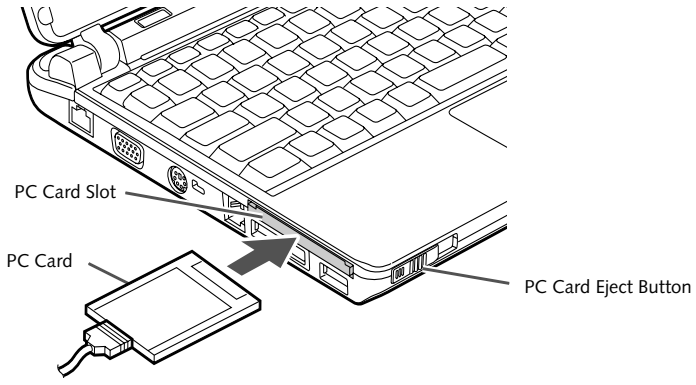

Figure 4-8 Inserting/Removing PC Cards

PC Cards

Your Fujitsu LifeBook notebook supports Type I and II PC Cards, which can perform a variety of functions.

Some available PC Cards:

- Fax/data modem cards
- Local area network (LAN) cards
- IDE solid-state disk cards
- SCSI cards
- Wireless LAN cards
- Other PC Cards that conform to PCMCIA 2.1 or CardBus standards

For further information, refer to the instructions supplied with your PC Card.

INSTALLING PC CARDS

PC Cards are inserted in the PC Card slot. To insert a PC Card, follow these easy steps: *(Figure 4-8)*

- Installing or removing a PC Card during your LifeBook notebook's shutdown or bootup process may damage the card and/or your notebook.
- Do not insert a PC Card into a slot if there is water or any other substance on the card as you may permanently damage the card, your LifeBook notebook, or both.

1. See your PC Card manual for specific instructions on the insertion of your card. Some PC Cards may require your notebook to be Off while inserting them.
2. Make sure there is no PC Card currently in the slot. If there is, see Removing PC Cards.
3. Insert your PC Card into the slot, with the product label facing up.
4. Push the card into the slot firmly until it is seated in the opening. You will hear a click and the Eject button will pop away from your notebook.

REMOVING PC CARDS

To remove a PC Card, follow these easy steps:

Windows has a shutdown procedure for PC Cards that must be followed before removing a card. (Please review your operating system manual for the correct procedure).

1. See your PC Card manual for specific instructions on removing your card. Some PC Cards may require your notebook to be in Suspend Mode or Off while removing them.

If the dialog box states that the device cannot be removed, you must save all of your open files, close any open applications and shut down your notebook.

2. Push the PC Card eject button to the right. This will push the PC Card slightly out of the slot allowing you to remove the card.

If the PC Card has an external connector and cable, do not pull the cable when removing the card.

P7120.book Page 38 Monday, October 10, 2005 4:38 PM

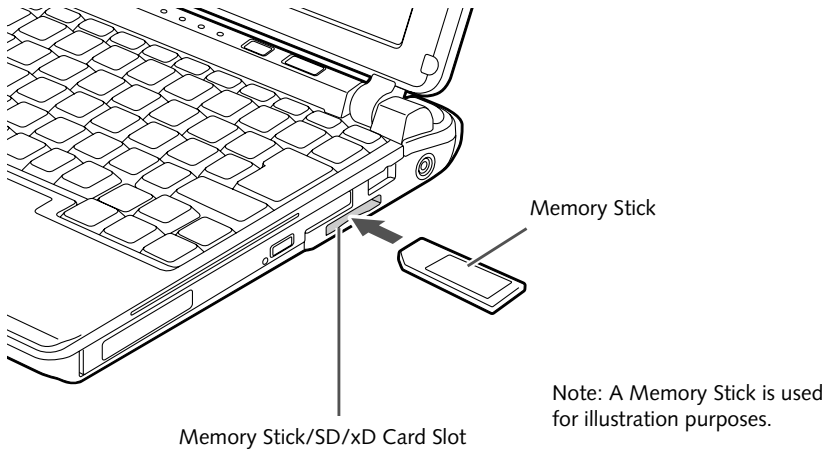

Figure 4-9. Installing a Memory Stick/SD/xD Card

Memory Stick/ Secure Digital/xD Slot

Your LifeBook notebook supports the following memory cards, on which you can store and transfer data to and from a variety of digital devices. These cards use flash memory architecture, which means they don't need a power source to retain data.

- SD Memory Card
- Memory Stick Media
- Memory Stick Select Media
- Memory Stick Duo Media
- Memory Stick PRO Media
- xD Picture Cards

- Some of the media in the above list may have more features than others.
- An adapter is required for Memory Stick Duo.
- Copyright Protection Technology cannot be used.
- MultiMedia Cards (MMC) and Secure MMC are not supported.

Memory Stick is a flash memory technology developed by Sony Electronics. Memory Stick allows you to record, transfer and share digital content, such as digital pictures, movies, music, voice, and computer data and applications.

Secure Digital (SD) Cards are very similar to Memory Sticks, but they are shorter. Like the Memory Stick, SD Cards allow portable storage among a variety of devices, such as cell phones, GPS systems, digital cameras, and PDAs. SD Cards transfer data quickly, with low battery consumption. Like the memory stick, it uses flash memory architecture.

xD Cards work the same as Memory Sticks and SD Cards, but they are much smaller than either one. Using an xD Card in the slot requires an adapter. xD Cards are primarily used to store and transfer images with devices such as cell phones.

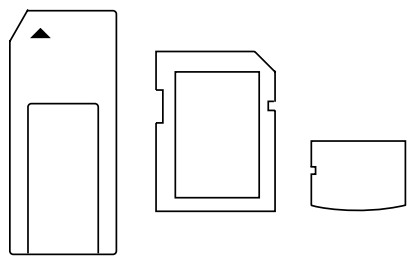

Figure 4-10. Memory Stick, Secure Digital, xD Cards

INSTALLING MEMORY STICK/SD/XD CARDS

Memory Sticks, SD Cards, and xD Cards are inserted in the Memory Stick/SD/xD Card slot *(Figure 4-9)*. To insert a Memory Stick, SD Card, or xD Card, follow these steps:

- Installing or removing a Memory Stick, SD Card, or xD Card during your LifeBook notebook's shutdown or bootup process may damage the card and/or your LifeBook notebook.
- Do not insert a card into a slot if there is water or any other substance on the card as you may permanently damage the card, your LifeBook notebook, or both.

P7120.book Page 39 Monday, October 10, 2005 4:38 PM

1. See your card manual for instructions on the insertion of your card. Some cards may require that your notebook is off while inserting them.
2. Make sure there is no card currently in the slot. If there is, see Removing a Memory Stick/SD/xD Card.
3. Insert your card into the slot with the product label facing up.
4. Push the card firmly into the slot until it is seated in the connector.

REMOVING A MEMORY STICK/SD/XD CARD

To remove a Memory Stick, SD Card, or xD Card, follow these easy steps:

See your card manual for specific instructions on the removal of your card. Some cards may require your LifeBook notebook to be in Suspend Mode or Off while removing them.

Push the Memory Stick, SD Card, or xD Card in until it unlatches. It will then eject from the slot for removal.

P7120.book Page 40 Monday, October 10, 2005 4:38 PM

Memory Upgrade Module

Your LifeBook notebook can be upgraded to include up to 1 GB of in-slot high speed Double Data Rate (DDR2) Synchronous Dynamic RAM (SDRAM). To increase your LifeBook notebook's memory capacity, you may install a larger memory upgrade module.

Your LifeBook notebook has two micro DIMM slots. One of them is accessible via the memory compartment on the bottom of the system; the other is located under the keyboard and should not be accessed. If you have less than 1GB pre-installed, and you would like to increase it, you will need add a new module to the empty slot. The memory upgrade must be a dual-in-line (micro DIMM) SDRAM module. To ensure 100% compatibility, purchase the memory module only from the Fujitsu web store at **us.fujitsu.com/computers**.

The memory upgrade module can be severely damaged by electrostatic discharge (ESD). Be sure you are properly grounded when handling and installing the module.

ACCESSING THE MEMORY COMPARTMENT

To gain access to the memory compartment, follow these steps:

You must turn off power and remove any modem connection before installing the memory upgrade module.

1. Turn off power to your LifeBook notebook, and remove any power adapter (AC or auto/airline), battery pack, and modem connection.
2. Place your LifeBook notebook with the bottom facing up on a clean work surface.
3. Remove the two screws from the holes in the memory compartment cover. *(Figure 4-11)*

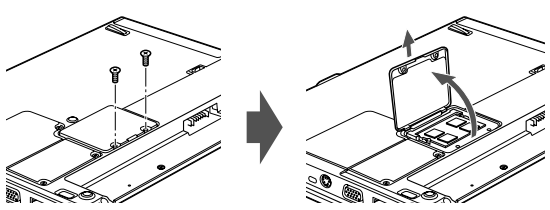

Figure 4-11. Removing memory compartment cover

The memory module which came with your system is installed under the keyboard, and should not be replaced. To increase the amount of memory, either install a new module in the DIMM slot, or remove a smaller module from the DIMM slot and replace with a larger one.

REMOVING A MEMORY MODULE

1. Perform steps 1 through 3 of Accessing the Memory Compartment.
2. Pull the module clips sideways away from each side of the memory module simultaneously. *(Figure 4-12)*

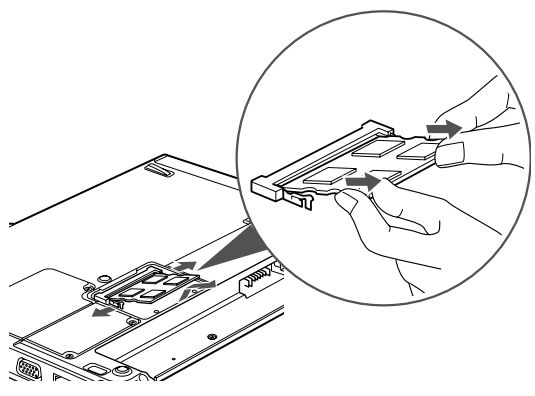

Figure 4-12. Removing a memory module

3. While holding the clips out, remove the module from the slot by lifting it up and pulling towards the back of your LifeBook notebook.
4. Store the memory upgrade module in a static guarded sleeve.
5. Install a new memory module as detailed in the procedure below.
6. Replace the memory compartment cover.

P7120.book Page 41 Monday, October 10, 2005 4:38 PM

INSTALLING A MEMORY MODULE

1. Align the connector edge of the memory upgrade module, chip side up, with the connector slot in the compartment. *(Figure 4-13)*

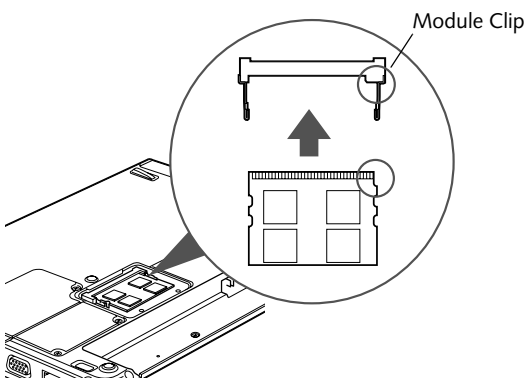

Figure 4-13. Aligning the memory module

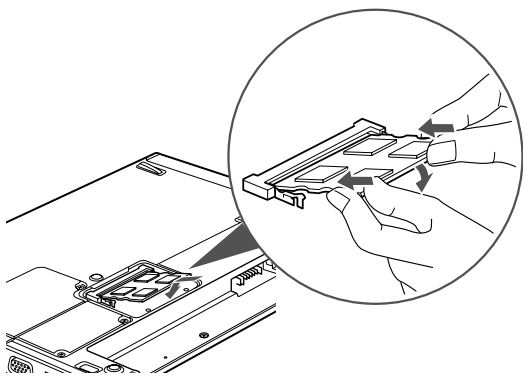

Figure 4-14. Installing a memory module

2 . Insert the memory upgrade module at a 45º angle and press it firmly onto the connector. *(Figure 4-14)*

3. Press the memory upgrade module down into the compartment until it locks underneath the retaining clip. You will hear a click when it is properly in place. *(Figure 4-13)*

> The memory upgrade module is not something you routinely remove from your LifeBook notebook. Once it is installed, you should leave it in place unless you want to increase system memory capacity.

CHECKING THE MEMORY CAPACITY

Once you have changed the system memory capacity by replacing the installed module with a larger one, be sure to check that your notebook has recognized the change.

Check the memory capacity by clicking [Start] -> Settings -> Control Panel, then double-clicking the System icon. Select the General tab and check the amount of memory under "Computer:".

There may be a variation between the actual memory size and what is displayed. This is due to the fact that your system uses a video graphics chip which dynamically allocates system memory to accelerate graphics performance. Up to 128 MB of memory is dynamically shared on an as-needed basis using Dynamic Video Memory Technology (DVMT).

> If the total memory displayed is incorrect, check that your memory upgrade module is properly installed. *(If the module is properly installed and the capacity is still not correctly recognized, see Trouble-shooting on page 65.*

P7120.book Page 42 Monday, October 10, 2005 4:38 PM

Device Ports

Your Fujitsu LifeBook notebook comes equipped with multiple ports to which you can connect external devices such as disk drives, keyboards, printers, etc.

MODEM (RJ-11) TELEPHONE PORT

The modem (RJ-11) telephone port is used for an internal modem. To connect the telephone cable follow these easy steps:

1. Align the connector with the port opening *(Figure 4-15)*.
2. Push the connector into the port until it is seated.
3. Plug the other end of the telephone cable into a telephone outlet.

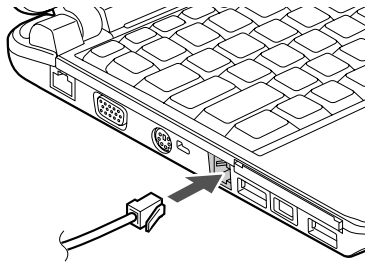

Figure 4-15 Modem Port

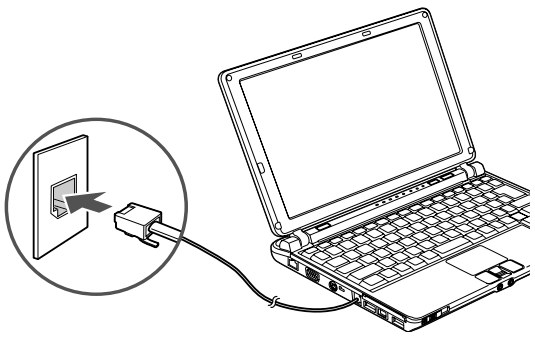

Figure 4-16 Connecting the Modem

The modem sound is deactivated by default, to activate modem sound follow these easy steps:

1. Right click on the Speaker icon in your system tray.
2. Select **Open Volume**.
3. Select **Option/Properties**.
4. Under "Show the following volume controls", click on **Phone** and click **OK**.
5. Uncheck the Mute box under Phone Balance.

The internal modem is not intended for use with Digital PBX systems. Do not connect the internal modem to a Digital PBX as it may cause serious damage to the internal modem or your entire LifeBook notebook. Consult your PBX manufacturer's documentation for details. Some hotels have Digital PBX systems. Be sure to find out BEFORE you connect your modem.

- The internal modem is designed to the ITU-T V.90 standard. Its maximum speed of 53000bps is the highest allowed by FCC, and its actual connection rate depends on the line conditions. The maximum speed is 33600bps at upload.
- The internal modem on all Fujitsu LifeBook notebooks are registered for use in the United States and Canada. The modem may be certified in other countries.

INTERNAL LAN (RJ-45) PORT

The internal LAN (RJ-45) port is used for an internal Fast Ethernet (10/100 Base-T/Tx) connection. If your notebook has been configured with internal LAN capability you will need to configure your notebook to work with your particular network. (Please refer to your network administrator for information on your network configuration.) To connect the LAN cable follow these easy steps:

1. Open the protective cover on the right side of the system *(Figure 4-17)*.
2. Align the connector with the port opening.
3. Push the connector into the port until it is seated.
4. Plug the other end of the cable into a LAN outlet.

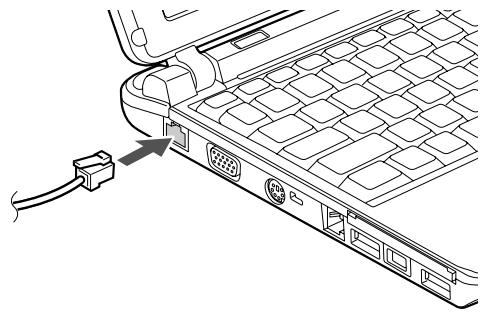

Figure 4-17 LAN Port

P7120.book Page 43 Monday, October 10, 2005 4:38 PM

IEEE 1394 PORT

The IEEE 1394 port (also known as “Firewire” or “iLink”) allows you to connect devices that are compliant with IEEE standard 1394. This port is effectively a very fast communications port. Some digital devices - such as digital cameras - use IEEE 1394 ports for fast transfer of digital files and data.

In order to connect an IEEE 1394 device, follow these steps:

1. Open the protective cover on the right side of the system *(Figure 4-18)*.
2. Align the connector with the port opening.
3. Push the connector into the port until it is seated.

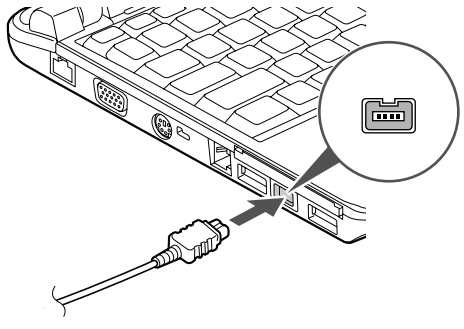

Figure 4-18 IEEE 1394 Port

S-VIDEO OUT PORT (TV OUT)

The S-Video port allows you to connect and use directly any S-Video device, such as a VCR or television. The S-Video standard provides for a higher quality picture than NTSC or PAL. In order to connect an S-Video device, follow these easy steps:

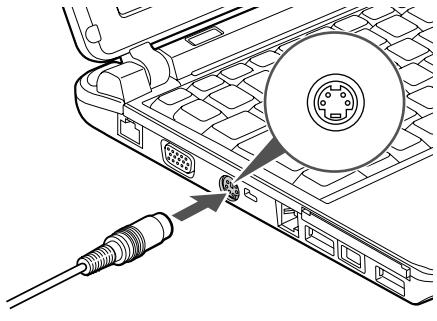

Figure 4-19 S-Video Out Port

1. Open the protective cover on the right side of the system *(Figure 4-19)*.
2. Align the connector with the port opening.
3. Push the connector into the port until it is seated.

UNIVERSAL SERIAL BUS PORTS

The Universal Serial Bus 2.0 ports allow you to connect USB devices such as external game pads, pointing devices, keyboards and/or speakers. USB 2.0 is much faster than USB 1.1 (Its 480Mbps transfer rate is 40 times faster than that of USB 1.1). USB 2.0 ports are backward-compatible to work with USB 1.1 devices.

In order to connect a USB device follow these easy steps:

1. Align the connector with the port opening.
2. Push the connector into the port until it is seated.

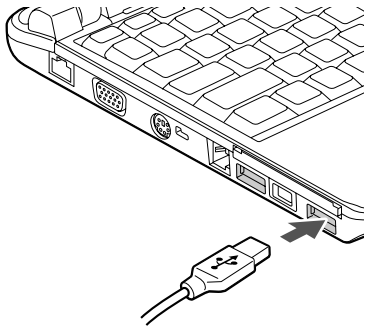

Figure 4-20 USB Port

HEADPHONE/LINE-OUT JACK

The headphone/line-out jack allows you to connect headphones or powered external speakers to your notebook. Your headphones or speakers must be equipped with a 1/8” (3.5 mm) stereo mini-plug. The headphone/line-out jack is located on the front of the system. *(Figure 4-21)* In order to connect headphones or speakers follow these easy steps:

1. Align the connector with the port opening.

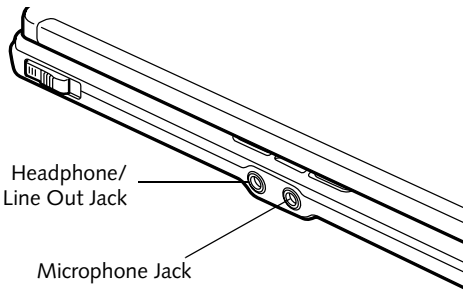

Figure 4-21 Headphone/Line Out and Microphone Jacks

2. Push the connector into the port until it is seated.

If you plug headphones into the headphone jack, the built-in stereo speakers will be disabled.

P7120.book Page 44 Monday, October 10, 2005 4:38 PM

MICROPHONE JACK

The microphone jack allows you to connect an external mono microphone. The microphone jack is located on the front of the system. *(Figure 4-21)* Your microphone must be equipped with a 1/8”(3.5 mm) mono mini-plug in order to fit into the microphone jack of your notebook. In order to connect a microphone follow these easy steps:

1. Align the connector with the port opening.
2. Push the connector into the port until it is seated.

EXTERNAL VIDEO PORT

The external video port allows you to connect an external monitor or LCD projector. In order to connect a monitor, follow these easy steps:

1. Open the protective cover on the right side of the system *(Figure 4-22)*.
2. Align the connector with the port opening.
3. Push the connector into the port until it is seated.

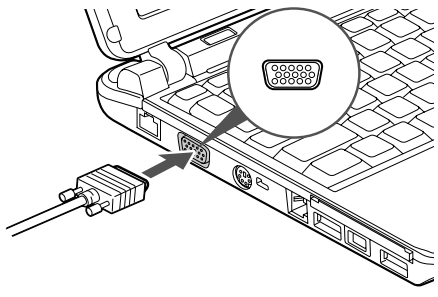

Figure 4-22 Installing the External Monitor Cable

Pressing the [Fn] + [F10] keys allows you to change your selection of where to send your display video. Each time you press the key combination, you will step to the next choice, starting with the built-in display panel only, moving to the external monitor only, finally moving to both the built-in display panel and an external monitor.

5

Using the Integrated Wireless LAN*

*Optional Device

P7120.book Page 46 Monday, October 10, 2005 4:38 PM

P7120.book Page 47 Monday, October 10, 2005 4:38 PM

FCC REGULATORY INFORMATION

Please note the following regulatory information related to the wireless LAN device.

Regulatory Notes and Statements

Wireless LAN, Health and Authorization for use

Radio frequency electromagnetic energy is emitted from Wireless LAN devices. The energy levels of these emissions, however, are far much less than the electromagnetic energy emissions from wireless devices such as mobile phones. Wireless LAN devices are safe for use by consumers because they operate within the guidelines found in radio frequency safety standards and recommendations. The use of Wireless LAN devices may be restricted in some situations or environments, such as:

On board an airplane, or

In an explosive environment, or

In situations where the interference risk to other devices or services is perceived or identified as harmful.

In cases in which the policy regarding use of Wireless LAN devices in specific environments is not clear (e.g., airports, hospitals, chemical/oil/gas industrial plants, private buildings), obtain authorization to use these devices prior to operating the equipment.

Regulatory Information/Disclaimers

Installation and use of this Wireless LAN device must be in strict accordance with the instructions included in the user documentation provided with the product. Any changes or modifications made to this device that are not expressly approved by the manufacturer may void the user's authority to operate the equipment. The manufacturer is not responsible for any radio or television interference caused by unauthorized modification of this device, or the substitution or attachment of connecting cables and equipment other than those specified by the manufacturer. It is the responsibility of the user to correct any interference caused by such unauthorized modification, substitution or attachment. The manufacturer and its authorized resellers or distributors will assume no liability for any damage or violation of government regulations arising from failure to comply with these guidelines.

This device must not be co-located or operating in conjunction with any other antenna or transmitter.

Federal Communications Commission statement

This device complies with Part 15 of FCC Rules.

Operation is subject to the following two conditions: (1) This device may not cause interference, and, (2) This device must accept any interference, including interference that may cause undesired operation of this device.

For operation within 5.15~5.25 GHz frequency range, it is restricted to indoor environments, and the antenna of this device must be integral.

FCC Interference Statement

This equipment has been tested and found to comply with the limits for a Class B digital device, pursuant to Part 15 of the FCC Rules. These limits are designed to provide reasonable protection against harmful interference in a residential installation. This equipment generates, uses, and can radiate radio frequency energy. If not installed and used in accordance with the instructions, it may cause harmful interference to radio communications. However, there is no guarantee that interference will not occur in a particular installation.

If this equipment does cause harmful interference to radio or television reception, which can be determined by turning the equipment off and on, the user is encouraged to try and correct the interference by one or more of the following measures:

1. Reorient or relocate the receiving antenna.
2. Increase the distance between the equipment and the receiver.
3. Connect the equipment to an outlet on a circuit different from the one the receiver is connected to.
4. Consult the dealer or an experienced radio/TV technician for help.

FCC Radio Frequency Exposure statement

This wireless LAN radio device has been evaluated under FCC Bulletin OET 65C and found compliant with the requirements as set forth in CFR 47 Sections 2.1091, 2.1093, and 15.247(b)(4) addressing RF Exposure from radio frequency devices. The radiated output power of this Wireless LAN device is far below the FCC radio frequency exposure limits. The antennas are located on the upper of the LCD screen side edge and are at 162mm distance from the bottom of the laptop.
The maximum SAR values measured from the devices are

Intel PROSet Wireless LAN(WM3945ABG) : 0.199 W/kg
Intel PROSet Wireless LAN(WM3945ABG) + Bluetooth Simultaneous : 0.188 W/kg

Atheros Wireless LAN(AR5BXB6) : 0.212 W/kg
Atheros Wireless LAN(AR5BXB6) + Bluetooth Simultaneous : 0.176 W/kg

Export restrictions

This product or software contains encryption code which may not be exported or transferred from the US or Canada without an approved US Department of Commerce export license. This device complies with Part 15 of FCC Rules., as well as ICES 003 B / NMB 003 B. Operation is subject to the following two conditions: (1) this device may not cause harmful interference, and (2) this device must accept any interference received, including interference that may cause undesirable operation. Modifications not expressly authorized by Fujitsu Computer Systems Corporation may invalidate the user's right to operate this equipment.

Canadian Notice

The device for the band 5150 - 5250 MHz is only for indoor usage to reduce the potential for harmful interference to co-channel mobile satellite systems.
The maximum antenna gain of 6 dBi permitted (for devices in the 5250 - 5350 MHz, 5470 - 5725MHz and 5725 - 5825MHz bands) to comply with the e.i.r.p. limit as stated in A9.2 of RSS210.
In addition, users should also be cautioned to take note that high power radars are allocated as primary users (meaning they have priority) of 5250 - 5350 MHz and 5650 - 5850 MHz and these radars could cause interference and/or damage to LE-LAN devices.