Operating Manual

System

FUJITSU Tablet STYLISTIC Q775

FUJITSU

Contact address in North America

FUJITSU AMERICA INC:

1250 East Arques Avenue Sunnyvale

CA 94085-3470, U.S.A.

Telephone: 800 831 3183 or 408 746 6000

"http://solutions.us.fujitsu.com"

"http://solutions.us.fujitsu.com/contact"

Have a question? Email us at: "AskFujitsu@us.fujitsu.com"

Copyright

© 2 0 1 4 F ujitsu America, Inc. All rights reserved. B5FK-5481-01ENZ0-00

FUJITSU Tablet STYLISTIC Q775

Operating Manual

Declaration of conformity	2
Fujitsu Contact Information Notational conventions	8
Ports and controls	9
Important notes	12
First-time setup of your device	17
Working with the Tablet PC	21
Accessories for your Tablet PC	43
(optional)	61
Security functions Connecting	68
external devices Settings in BIOS	72
Setup Utility Troubleshooting and tips	75
Technical data	82
Manufacturer’s notes	88
Appendix	94
FCC and IC Regulatory Information	98
Index	113

DECLARATION OF CONFORMITY

according to FCC Part 15

Responsible Party Name:	Fujitsu America, Inc.
Address:	1250 E. Arques Avenue Sunnyvale, CA 94085
Telephone:	(408) 746-6000
Declares that product:	Base Model Configuration: LIFEBOOK Q775 Notebook
	Complies with Part 15 of the FCC Rules.

This device complies with Part 15 of the FCC rules. Operations are subject to the following two conditions:
(1) This device may not cause harmful interference, (2) This device must accept any interference received, including interference that may cause undesired operation.

Copyright and Trademark Information

Fujitsu America, Incorporated has made every effort to ensure the accuracy and completeness of this document; however, as ongoing development efforts are continually improving the capabilities of our products, we cannot guarantee the accuracy of the contents of this document. We disclaim liability for errors, omissions, or future changes.

Fujitsu, the Fujitsu logo and STYLISTIC are registered trademarks of Fujitsu Limited or its subsidiaries in the United States and other countries.

Intel and Intel Core are trademarks or registered trademarks of Intel Corporation or its subsidiaries in the United States and other countries.

Microsoft and Windows are either registered trademarks or trademarks of Microsoft Corporation in the United States and/or other countries.

The ExpressCard word mark and logo are owned by the Personal Computer Memory Card International Association (PCMCIA) and any use of such marks by Fujitsu America, Incorporated is under license.

Google is a trademark or registered trademark of Google Incorporated.

Bluetooth is a trademark of Bluetooth SIG, Inc., USA.

OmniPass is a trademark of Softex, Inc.

Roxio is a trademark of Roxio, a division of Sonic Solutions.

PowerDirector, PowerDVD, YouCam, and MakeDisc are trademarks of CyberLink Corp.

Adobe, Acrobat, and Adobe Reader are either a reg istered trademarks or trademarks of Adobe Systems Incorporated in the United States and/or other countries.

All other trademarks specified here are the property of their respective owners.

Contents

Fujitsu Contact Information 7

Notational conventions 8

Ports and controls 9

Important notes 12
Safety instructions 12
Additional safety notes for devices with wireless components 13
Protecting the display screen 13
Energy saving 13
Energy saving under Windows 13
Traveling with your Tablet PC 13
Before you travel 14
Transporting the Tablet PC 15
Storing your Tablet PC 15
Cleaning the Tablet PC 16

First-time setup of your device 17
Unpacking and checking the device 17
Choose a location 18
Connecting the AC adapter 18
Switching on the device for the first time 19
Installing Bonus Apps 20

Working with the Tablet PC 21
Status indicators 21
Switching the Tablet PC on 22
Programing the ON/OFF button 22
Switching the Tablet PC off 23
Handwriting recognition 23
Touchscreen 24
Select display orientation (portrait or landscape format) 25
Using fingers 25
Calibrate the Dual Digitizer for finger-based operation of the device. 25
Actions with one finger (Windows 8.1 Pro) 26
Actions with one finger (Windows 7 / Windows 8.1 Desktop) 28
Actions with two fingers (Windows 7 / Windows 8.1 Desktop) 29
Using the stylus 31
Stylus location 32
Adjusting the stylus 32
Calibrating the stylus 33
Installing a stylus tether 33
Tablet buttons 34
Webcam 34
Rechargeable battery 35
Charging and maintaining the battery 35
Using the energy saving functions 36
Memory cards 37
Supported formats 37
Inserting the memory card 37
Removing the memory card 38

SIM card 39
Inserting a SIM card 39
Removing a SIM card 40
Wireless LAN/Bluetooth/4G/NFC wireless components 40
Switching the wireless components on and off 40
Further information on WLAN and Bluetooth 41
Access via Wireless WAN 41
NFC 41
Ethernet and LAN (only with performance docking cradle or keyboard docking station) 41
GPS 42

Accessories for your Tablet PC (optional) 43
Your performance docking cradle (optional) 44
Cradle components 44
Setting up the cradle 45
Connecting the Tablet PC to the cradle 45
Disconnecting the Tablet PC from the cradle 47
Keyboard cover (optional) 48
Keyboard cover components 48
Connecting the Tablet PC to the keyboard cover 49
Separating the Tablet PC from the keyboard cover 50
Keyboard docking station (optional) 51
Ports on the keyboard docking station 51
Connecting the Tablet PC to the keyboard docking station 53
Separating the Tablet PC from the keyboard docking station 54
VESA mounting attachment (optional) 55
Hand strap (optional) 56
Shoulder strap (optional) 57
Folio case (optional) 58
Micro USB adapters 59

Security functions 61
Configuring the fingerprint sensor 62
Configuring password protection in BIOS Setup Utility 63
Protecting BIOS Setup Utility (supervisor HDD password and user HDD password) 63
Password protection for booting the operating system 64
Password protection for the hard disk 65
Smart Card reader (optional) 66
Inserting the Smart Card 66
Trusted Platform Module - TPM (device dependent) 67
Enabling TPM 67
Disabling TPM 67

Connecting external devices 68
Connecting an external monitor 69
HDMI port (only performance docking cradle and keyboard docking station) 69
External monitor port (VGA) (only performance docking cradle and keyboard docking station) 69
Connecting USB devices 70
How to remove USB devices correctly 70
Headphones port 71

Settings in BIOS Setup Utility 72
Starting the BIOS Setup Utility 72

BIOS Setup Utility operation . . . 73
Exiting BIOS Setup Utility . . . 74
Exit Saving Changes - save changes and exit BIOS Setup Utility . . . 74
Exit Discarding Changes - Reject changes and exit BIOS Setup Utility . . . 74
Load Setup Defaults – load default values . . . 74
Discard Changes - Discard Changes without exiting BIOS Setup Utility . . . 74
Save Changes - save changes without exiting the BIOS Setup Utility . . . 74
Save changes and power off . . . 74

Troubleshooting and tips . . . 75
Help if problems occur . . . 75
Recovering your Factory Image . . . 75
The Tablet PC's date or time is incorrect . . . 76
Battery indicator does not illuminate . . . 76
The Tablet PC's touchscreen remains dark . . . 76
The display on the Tablet PC's touchscreen is difficult to read. . . . 76
The external monitor remains blank . . . 77
The external monitor is blank or the image is unstable . . . 77
The cursor does not correctly follow the stylus movements . . . 77
Stylus input not working . . . 78
The Tablet PC does not start after switch on . . . 78
The Tablet PC stops working . . . 78
The printer does not print . . . 79
The wireless connection to a network does not work . . . 79
The battery discharges too quickly . . . 79
Smart Card reader is not recognized . . . 80
Acoustic warning . . . 80
Error messages on the screen . . . 80

Technical data . . . 82
Tablet PC . . . 82
WLAN specifications . . . 84
Rechargeable battery . . . 84
AC adapter (65 W) . . . 85
Performance docking cradle (optional) . . . 85
Keyboard cover (optional) . . . 86
Keyboard docking station (optional) . . . 86
VESA mounting attachment (optional) . . . 87
Hand strap (optional) . . . 87
Shoulder strap (optional) . . . 87
Micro USB adapters (optional) . . . 87

Manufacturer's notes . . . 88
Disposal and recycling . . . 88
Recycling your battery . . . 88
DOC (Industry CANADA) Notices . . . 88
UL Notice . . . 89
ENERGY STAR Compliance . . . 90
Declarations of Conformity . . . 90
FCC and IC Regulatory Information . . . 90
Regulatory Notes and Statements . . . 91

Appendix . . . 94
Before Using the Optional Wireless LAN . . . 94

Wireless LAN Devices Covered by this Document 94
Characteristics of the WLAN Device 94
Wireless LAN Modes Using this Device 95
Deactivating/Disconnecting the WLAN Device 96
Configuring the Wireless LAN 97
Connection to the network 97
Troubleshooting the WLAN 98
Image Backup and Recovery Procedures 100
Creating a Backup of Bootable Disk and Recovery Image 100
RECOVER YOUR SYSTEM WHEN THE HARD DRIVE IS STILL ACCESSIBLE 101
Using the Recovery and Utility Tools 101
Restore the Recovery Image from Hidden Partition 103
RECOVER YOUR SYSTEM WHEN THE HARD DRIVE IS NOT BOOTABLE 104
Restore the Recovery Image for Full Hard Drive 104
Recovering Your Recovery Image Using Recovery and Utility (for new hard drive or non-bootable hard drive) 105
Installing the Software after the Recovery Image is Restored 106

Index 109

Fujitsu Contact Information

Service and Support

You can contact Fujitsu Service and Support in the following ways:

- Toll free phone: 1-800-Fujitsu (1-800-838-5487)
- Website: "http://solutions.us.fujitsu.com/www/content/support/contact/index.php"

Before you place the call, you should have the following information ready so that the customer support representative can provide you with the fastest possible solution:

- Product name
- Product configuration number
- Product serial number
- Purchase date
- Conditions under which the problem occurred
- Any error messages that have occurred
- Type of device connected, if any

Fujitsu Shopping Online

Please go to "http://www.shopfujitsu.com/store/ ".

Maintaining Latest Configuration

To ensure that you always have the most current driver updates related to your system, you should occasionally access the Fujitsu Software Download Manager (FSDM) utility. The FSDM utility is available from the Fujitsu Support site. FSDM will allow you to view a list of the most current drivers, utilities, and applications to determine whether you have the latest versions. If you have a Windows 7 or Windows 8/8.1 operating system, you will need to go to the Support Site to download the FSDM Utility: "http://support.fujitsupc.com/CS/Portal/support.do?srch=DOWNLOADS".

Limited Warranty

Your LIFEBOOK notebook is backed by a Fujitsu International Limited Warranty. Check the service kit that came with your notebook for the Limited Warranty period and terms and conditions.

Notational conventions

⚠	Pay particular attention to text marked with this symbol. Failure to observe these warnings could pose a risk to health, damage the device, or lead to loss of data. The warranty will be invalidated if the device becomes defective through failure to observe these warnings.
i	Indicates important information for the proper use of the device.
▶	Indicates an activity that must be performed.
↳	Indicates a result.
`This font`	Indicates data entered using the keyboard in a program dialog or at the command line, e.g. your password (**`Name123`**) or a command used to start a program (**`start.exe`**)
`This font`	Indicates information that is displayed on the screen by a program, e.g.: `Installation is complete.`
This font	Indicates • terms and texts used in a software interface, e.g.: Click on *Save* • names of programs or files, e.g. *Windows* or *setup.exe*.
"This font"	Indicates • cross-references to another section, e.g. "Safety information" • cross-references to an external source, e.g. a web address: For more information, go to "http://solutions.us.fujitsu.com/" • names of CDs, DVDs and titles or designations for other materials, e.g.: "CD/DVD Drivers & Utilities" or "Safety/Regulations" manual
Key	Indicates a key on the keyboard, e.g: F10.
This font	Indicates terms and texts that are emphasized or highlighted, e.g.: **Do not switch off the device**.

Ports and controls

This chapter presents the individual hardware components of your device. It gives an overview of the indicators and connections of the device. Please familiarize yourself with these items before you start to work with the device.

Front

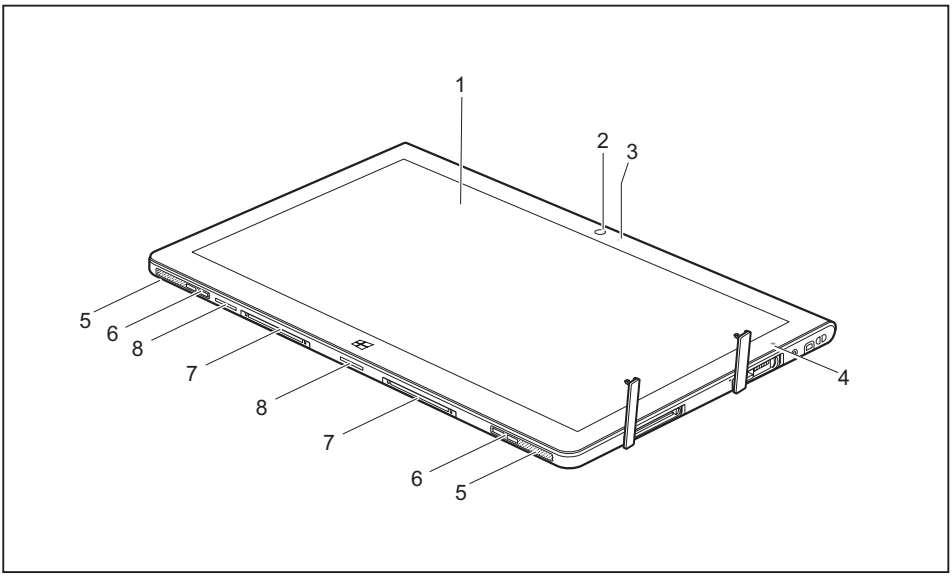

1 = Touchscreen
2 = Webcam
3 = Webcam LED
4 = Ambient light sensor
5 = Speaker
6 = Mechanical mounting for keyboard docking station / keyboard cover / cradle
7 = Docking port
8 = Air inlet

Left-hand side

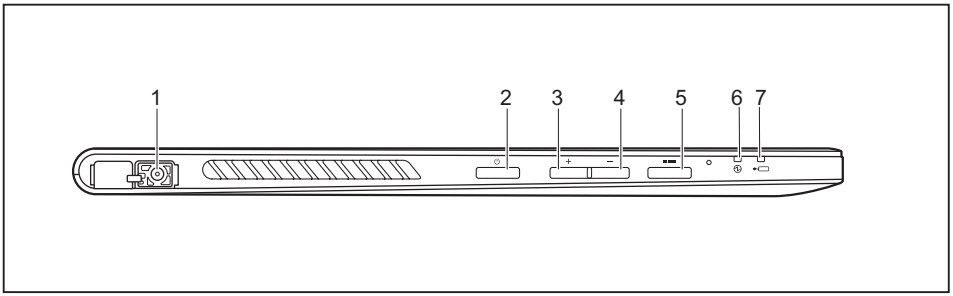

1 = DC jack (DC IN, protected by cover)
2 = ON/OFF button
3 = Increase volume button
4 = Decrease volume button
5 = Shortcut button
6 = Power-on indicator
7 = Battery charging indicator

Right-hand side

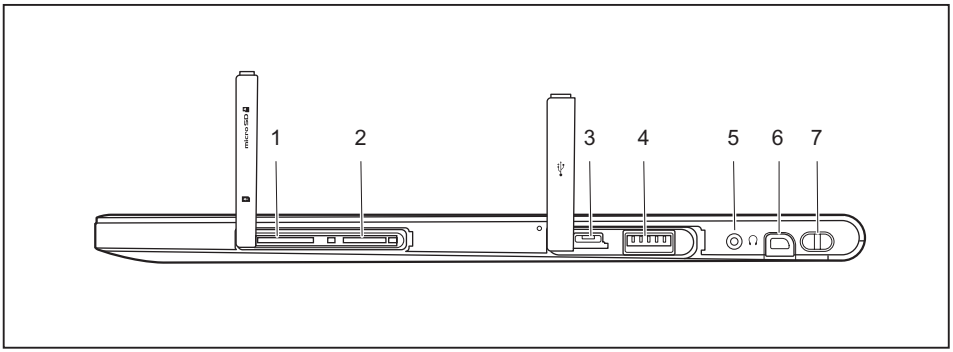

1 = SIM card slot (format: micro SIM, protected by cover)
2 = Storage card slot (format: micro SD, protected by cover)
3 = Micro USB port (protected by cover)
4 = USB port (USB 3.0, protected by cover)
5 = Headphones port
6 = Stylus holder
7 = Eyelet for stylus cord

Back (2 variants: standard shell and smart card shell)

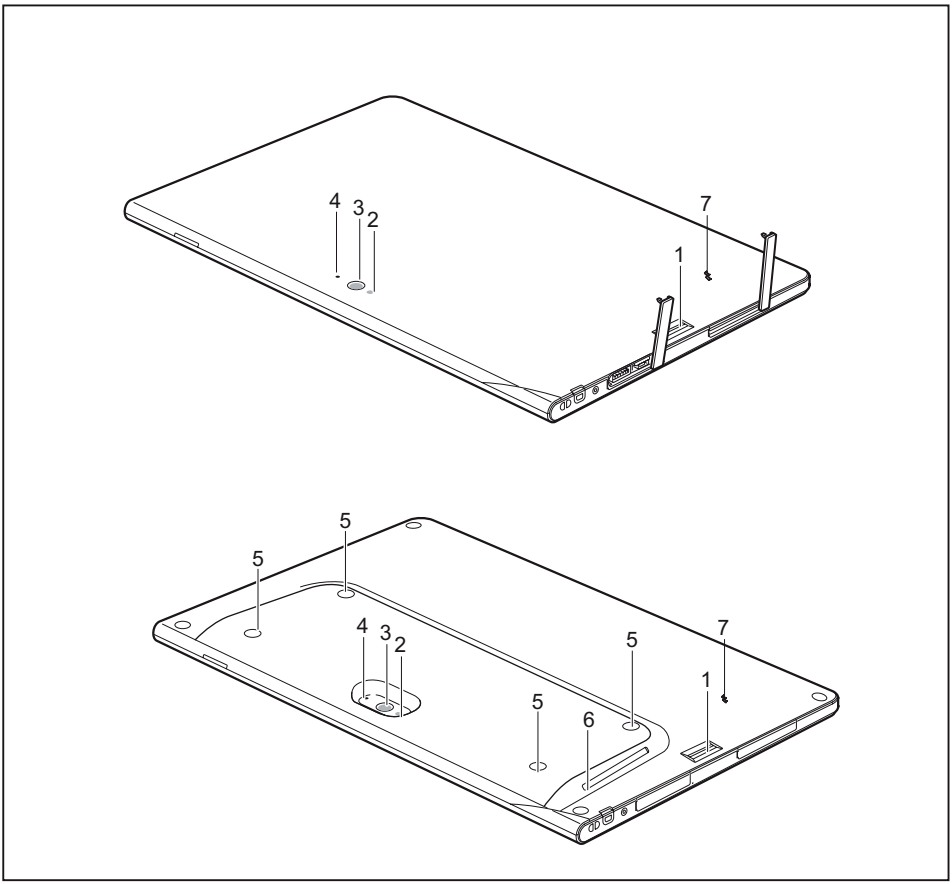

1 = Fingerprint sensor
2 = Camera light
3 = Webcam
4 = Webcam LED
5 = Screw holes (device-dependent) for securing accessories
6 = Smart Card reader (device dependent)
7 = NFC (Near Field Communication) (device-dependent)

Important notes

This chapter contains essential safety information which must be followed when working with your Tablet PC. The other notes provide useful information about your Tablet PC.

Safety instructions

Please follow the safety notes provided in the "Safety/Regulations" manual as well as the safety notes given below.

Please pay special attention to the sections in the manual marked with the symbol on the left.

When connecting and disconnecting cables, observe the relevant notes in this operating manual.

Read the information on the ambient conditions in the "Technical data", Page 82 chapter and the information in the "First-time setup of your device", Page 17 chapter before preparing your Tablet PC for use and switching it on for the first time.

When cleaning the device, please observe the relevant notes in the section .

Pay attention to the additional safety notes for devices with wireless components provided in the "Safety/Regulations" manual.

When handling this device, you come into contact with lead, a chemical which in California is held to be a possible cause of birth defects and other damage to fertility.

Wash your hands after using the device.

This Tablet PC complies with the relevant safety regulations for data processing equipment. If you have questions as to whether you can set up the Tablet PC in the intended environment, please contact your sales outlet or our hotline/service desk.

Additional safety notes for devices with wireless components

If a wireless component (Wireless LAN, Bluetooth, 4G) is integrated in your Tablet PC, you must be sure to observe the following safety precautions when using your Tablet PC:

- Switch off the wireless components when you are in an aircraft or driving in a car.
- Switch off the wireless components when you are in a hospital, an operating room or near a medical electronics system. The transmitted radio waves can impair the operation of medical devices.
- Switch off the wireless components, when you let the device get near flammable gases or into hazardous environments (e.g. gas station, paint stores), as the transmitted radio waves can cause an explosion or a fire.

For further information on how to switch the wireless components on and off, refer to "Switching the wireless components on and off", Page 40.

Protecting the display screen

Depending on your device configuration, where applicable your device is not waterproof. In this event, do not pour liquids onto the device and do not wash it with a wet cloth. Do not place items on the top of the display, or damage may occur.

During normal use of the device, small particles from the environment can become embedded in the stylus tip and scratch the screen. The warranty does not cover a scratched screen.

Energy saving

If you will not be using your Tablet PC, switch it off. Switch off any connected external devices when they are not in use. If you use the energy-saving functions, the Tablet PC uses less power. If you do this, you will be able to work longer with the Tablet PC before having to recharge the battery.

The energy efficiency is increased and environmental pollution is reduced. You save money and help protect the environment.

Energy saving under Windows

► Make use of the available energy saving functions as described in chapter "Using the energy saving functions", Page 36.

Traveling with your Tablet PC

Please follow the instructions below when traveling with your Tablet PC.

Before you travel

- ► Back up important data stored on your hard disk.
- ► Switch off the wireless component for data security reasons. With data traffic via a wireless connection, it is also possible for unauthorized third parties to receive data.

i

Information on activating data encryption is provided in the documentation for your wireless component.

- ► If you want to use your Tablet PC during a flight, ask the flight attendants to see it is safe to use it.

When traveling in other countries

- ► If you are traveling abroad, check that the AC adapter can be operated with the local AC voltage. If this is not the case, obtain the appropriate AC adapter for your Tablet PC. Do not use any other voltage converter!
- ► Check whether the local AC voltage and the AC cable are compatible. If this is not the case, buy an AC cable that suits the local conditions.
- ► Enquire with the appropriate government office of the country you will be traveling in as to whether you may there operate the wireless component integrated in your Tablet PC.
- ► Take the necessary travel adapters with you when traveling abroad. Check in the following table for which travel adapters you will need, or ask your travel organizer.

Power connection	Travel destination
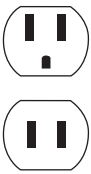	United States, Canada, Mexico, parts of Latin America, Japan, Korea, Philippines, Taiwan
	Russia and the Commonwealth of Independent States (CIS), much of Europe, parts of Latin America, the Middle East, parts of Africa, Hong Kong, India, much of south-east Asia
	United Kingdom, Ireland, Malaya, Singapore, parts of Africa
	China, Australia, New Zealand

Transporting the Tablet PC

Protect the Tablet PC from severe shocks and extreme temperatures (e.g. direct sunlight in a car).

- Do not transport your Tablet PC while it is turned on.
- Carry your Tablet PC with you while traveling, rather than checking it in as baggage.
- Never put your Tablet PC through a metal detector; have it hand-inspected by security personnel. You can however, put your Tablet PC through a properly tuned X-ray machine. To avoid problems, place it close to the entrance of the machine and remove it as soon as possible or have it hand-inspected by security personnel. Security officials may require you to turn your Tablet PC on, so make sure you have a charged battery on hand.

► Switch the Tablet PC off.

► Unplug the AC plug of the AC adapter and all external devices from the power outlets.

► Disconnect the AC adapter cable and the data cables for all external devices.

► To protect against damaging jolts and bumps, use a suitable Tablet PC carrying case to transport your Tablet PC.

Storing your Tablet PC

- If storing your Tablet PC for a month or longer, turn it off, fully charge the battery, then remove and store all Lithium Polymer batteries.
- Store your Tablet PC in a cool, dry location. Temperatures should remain between 13ºF / -25ºC and 140ºF / 60ºC.
- Store your Tablet PC and batteries separately. If you store your Tablet PC with a battery installed, the battery will discharge, and battery life will be reduced. In addition, a faulty battery might damage your Tablet PC.

- Always power off the Tablet PC before transporting and/or packaging it. After shutting down the Tablet PC, wait until the status led panel indicates power off condition (i.e., no lights are illuminated).
- It is possible that the Tablet PC may not automatically go to power-off or hibernate mode when you close the lid. This situation may occur due to pre-operating system boot password security settings or some other application running on the Tablet PC.
- Attempting to transport the Tablet PC while power is on may damage the Tablet PC due to shock or overheating.

Cleaning the Tablet PC

- Use of incorrect cleaners can result in optical impairment of the LCD and / or damage to the computer. Always refer to the cleaner manufacturer's guidelines and material safety data sheets fo proper handling and use of the products.
- Never use ammonia, acidic, or alkaline cleaners or organic chemicals such as paint thinner, acetone or kerosene. It may damage surface finishes and the coating of the LCD screen.
- Never use compressed air for cleaning your computer.
- If your Tablet PC has a Smart Card slot, be very careful to avoid any liquid entering the slot as this can damage the unit.

Cleaning guidelines using recommended off-the-shelf cleaners: Computer exterior

To clean the exterior, use one of the following off-the-shelf products:

- Office Depot® #154-616 b Cleaning Kit
- Meridrew Enterprises Klear Screen® Wipes
- 3M CL563 Cleaner Wipes

After cleaning with one of these products, gently polish with a dry, soft, lint-free cloth until the solution is no longer visible.

Disinfecting STYLISTIC computers

Wipe the surface with a soft cloth wipe and a 50% ethanol solution or use another ethanol-based germicide which has been registered as a hospital disinfectant by the EPA.

First-time setup of your device

Please read the chapter "Important notes", Page 12.

If your device is equipped with a Windows operating system, the necessary hardware drivers and supplied software are already pre-installed.

Before switching it on for the first time, connect the device to the AC voltage using the AC adapter, see "Connecting the AC adapter", Page 18. The AC adapter must remain connected during the whole of the installation process.

A system test is performed when your device is first switched on. Various messages can appear. The display may remain dark for a short time or may flicker.

Please follow the instructions on the screen.

NEVER switch off your device during the first-time setup process.

The battery must be charged if you want to operate your device using the battery.

When used on the move, the built-in battery provides the device with the necessary power. You can increase the operating time by using the available energy-saving functions.

For instructions on how to connect external devices (e.g. mouse, printer) to your Tablet PC, please refer to the operating manual for your device.

Unpacking and checking the device

If you find that damage has occurred during transport, please notify your local sales outlet immediately!

- ► Unpack all the individual parts.
- ► Check your device for any visible damage which may have occurred during transportation.

You may need to reuse the packaging in future, for example if you need to transport your device.

Choose a location

Choose a suitable location for the device before setting it up. In doing so, please follow these instructions:

- Never place the device or the AC adapter on a heat-sensitive surface. The surface could be damaged as a result.
- Never place the device on a soft surface (e.g. carpeting, upholstered furniture, bed). This can result in damage caused by overheating.
- The underside of the device heats up during normal operation. Prolonged contact with skin can become unpleasant or even result in burns.
- Place the device on a stable, flat, non-slippery surface. Please note that the rubber feet of the device may mark certain types of delicate surfaces.
- Keep other objects at least 100 mm / 4 inches away from the device and its AC adapter to ensure adequate ventilation.
- Do not expose the device to extreme environmental conditions. Protect the device against dust, humidity and heat.

Connecting the AC adapter

Observe the safety notes in the enclosed "Safety/Regulations" manual.

The supplied AC cable conforms to the requirements of the country in which you purchased your device. Make sure that the AC cable is approved for use in the country in which you intend to use it.

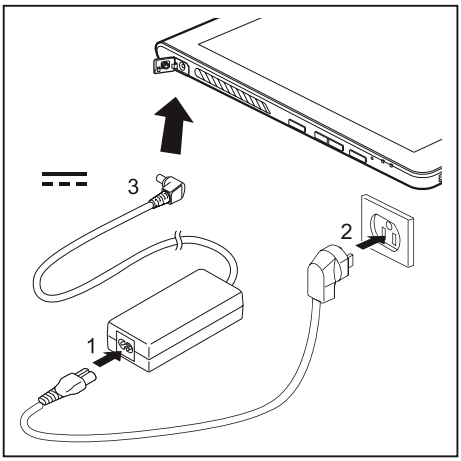

► Open the cover of the DC jack socket (DC IN).

► Connect the AC cable (1) to the AC adapter.

► Plug the AC cable (2) into a power outlet.

► Connect the AC adapter cable (3) to the DC jack socket (DC IN) of the device.

Switching on the device for the first time

To make it easier to use your device for the first time, the operating system is pre-installed on the hard disk.

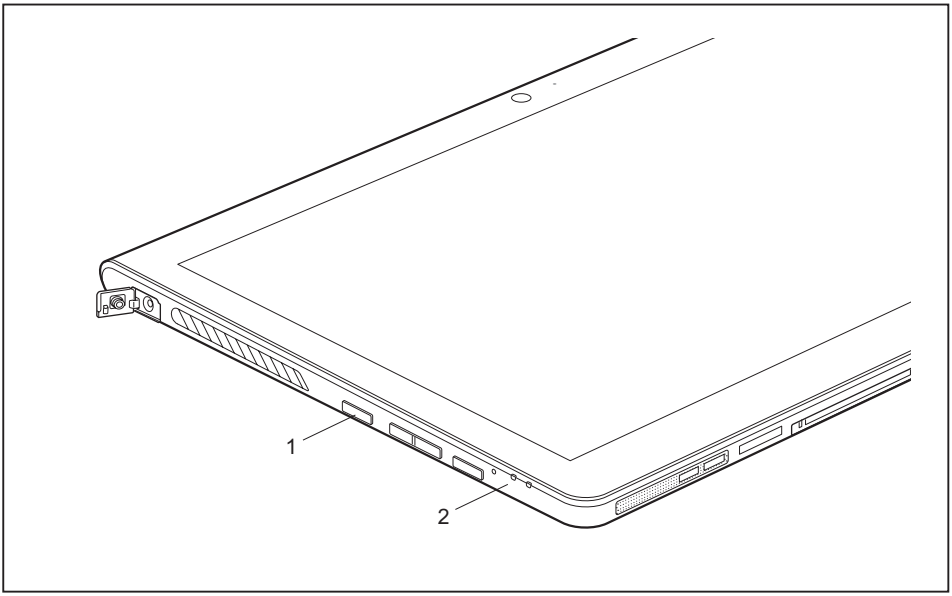

► Press the ON/OFF button (1) for about one second to switch the device on.

↳ The power-on indicator (2) lights up whenever the system is switched on.

► During the installation process, follow the on-screen instructions.

i

You can find information and help on the Windows operating system functions online at "http://windows.microsoft.com".

If a Windows 8.1 operating system is installed on your Tablet PC, a tutorial is automatically started when a new user logs on for the first time to show you how to use the new functions of Windows 8.1.

Installing Bonus Apps

After you have started your system the first time, you will see a Bonus Apps icon on your desktop.

► Click on the icon to see which additional applications are available for you to install.

↳ Applications that are already installed appear in grey, those that are available for installation appear in blue.

► Select the applications you wish to install by selecting the checkbox adjacent to your selection.

or

► Click *Select All* if you would like to install all available applications

► To confirm your selection click *Install*.

i

Note that in some cases (depending upon which application was selected for installation) after installation completes, the system will prompt you to reboot.

There are also cases in which if multiple applications are selected to install but one of them needs a reboot, the system will reboot and continue installing the rest of the selected applications.

Working with the Tablet PC

This chapter describes the basics for operating your Tablet PC. You can find instructions on how to connect external devices (e.g. mouse, flash storage) to the Tablet PC in the chapter "Connecting external devices", Page 68.

Please refer to the notes in the chapter "Important notes", Page 12.

Status indicators

The status indicators (1,2) provide information about the status of the power supply, the drives, and the keyboard functions etc.

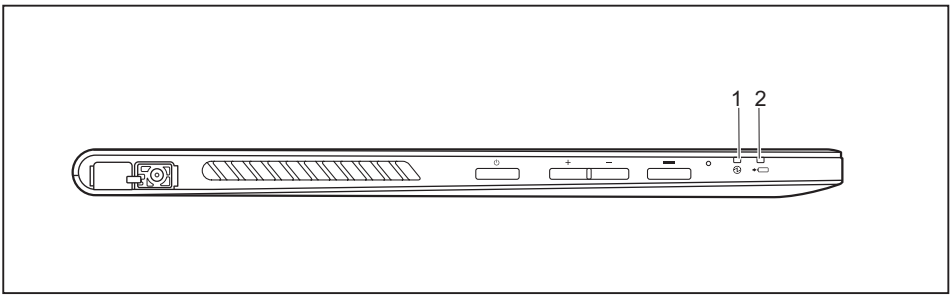

Status indicator	Description
	Power-on indicator • Indicator lights up blue: The Tablet PC is switched on. • The indicator flashes: The Tablet PC is in sleep mode (Save-to-RAM). • The indicator lights up, alternating between blue and white: The Tablet PC is in S3 mode and the wireless component (Wi-Fi or WWAN) is switched on. • The indicator lights up white: The Tablet PC is in S4 or S5 mode and the wireless component (Wi-Fi or WWAN) is switched on. • The indicator is not lit up: The Tablet PC is switched off or in Save-to-Disk mode.
	Battery charging indicator • The indicator lights up red: The AC adapter is connected. • The indicator is flashing red: The battery has a charging error. • The indicator is not lit up: The AC adapter is not connected.

Switching the Tablet PC on

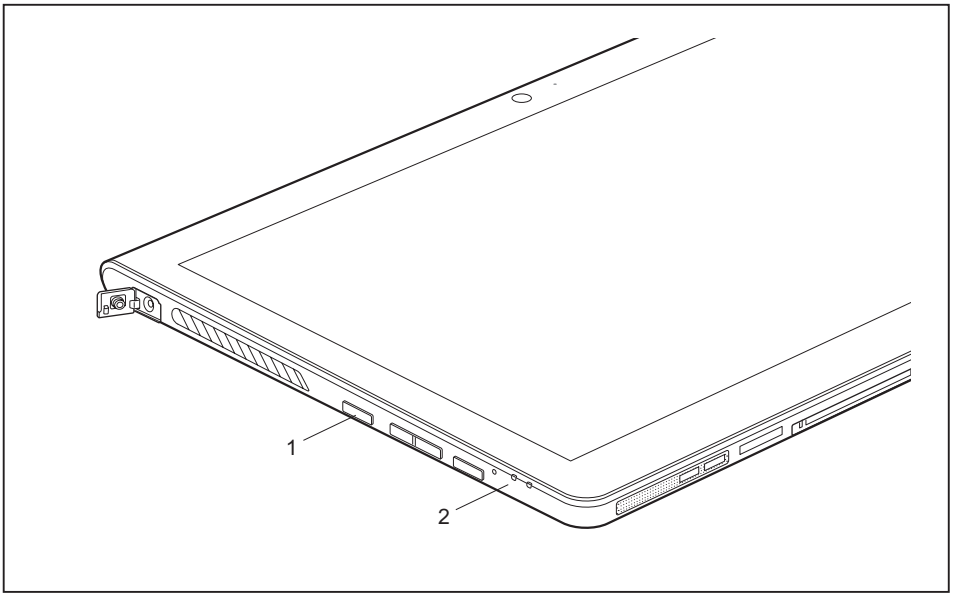

► Press the ON/OFF button (1) for about one second to switch the device on.
↳ The power-on indicator (2) lights up whenever the system is switched on.

Programing the ON/OFF button

You can program the ON/OFF button:

Operating system	Menu
Windows 7	*Start - (Settings) - Control Panel - System and Security - Power Options*
Windows 8.1	*Windows 8.1 Desktop - Control Panel - Hardware and Sound - Power Options*

i

If you have assigned a password, you must enter this when requested to do so in order to start the operating system. Detailed information can be found in the chapter "Security functions", Page 61.

Switching the Tablet PC off

Back up your data and close all applications before you switch off your device. Otherwise data might be lost.

- ► Shut down the operating system correctly.
- ► If the Tablet PC does not switch itself off automatically, press the ON/OFF button for approx. five seconds.

Handwriting recognition

For detailed information on handwriting recognition, see the documentation for your operating system.

At present, handwriting recognition under Windows 7 or Window 8.1 supports the following languages:

English, German, French, Italian, Japanese, Korean, Chinese (traditional and simplified), Dutch, Portuguese, Spanish, Brazilian, Norwegian (Bokmål and Nynorsk), Swedish, Finnish, Danish, Polish, Rumanian, Serbian (Cyrillic and Latin script), Catalan, Russian, Czech and Croatian.

Under Windows 8.1 you can set the required language under *Control Panel – Time, Language and Region – Language*.

Touchscreen

High-quality LCD screens (TFT) are installed in Fujitsu Tablet PCs. For technical reasons, these screens are manufactured for a specific resolution. An optimal, clear picture can only be ensured in the resolution intended for the particular screen. A screen resolution which differs from the specification can result in an unclear picture.

The screen resolution of your Tablet PC's touchscreen is optimally set at the factory.

Current production technology cannot guarantee an absolutely fault-free screen display. A few isolated constantly lit or unlit pixels (picture elements) may be present. The maximum permitted number of such faulty pixels is specified in the international standard ISO 9241-307 (Class II).

Example:

A screen with a resolution of 1280 x 800 has 1280 x 800 = 1024000 pixels. Each pixel consists of three subpixels (red, green and blue), so there are almost 3 million subpixels in total. According to ISO 9241-307 (class II), a maximum of 2 light and 2 dark pixels and in addition 5 light or 10 dark subpixels or an equivalent mix (1 light subpixel counts as 2 dark subpixels) are allowed to be defective.

Pixel	A pixel consists of 3 subpixels, normally red, green and blue. A pixel is the smallest element that can be generated by complete functionality of the display.
Subpixel	A subpixel is a separately addressable internal structure within a pixel that enhances the pixel function.
Cluster	A cluster contains two or more defective pixels or subpixels in a 5 x 5 pixel block.

Background lighting

LCD screens are operated with background lighting. The luminosity of the background lighting can decrease over the period of use of the Tablet PC. However, you can adjust the brightness of your monitor yourself.

Ambient light sensor

If your notebook was shipped with the Windows operating system, the screen brightness is regulated by the ambient light sensor and is dependent on the particular light conditions. This results in optimum readability and longer battery life at the same time.

If your notebook was shipped with Windows 8.1, the adaptive brightness setting is deactivated. To change the ambient light sensor settings, select *Control Panel - System and Security - Power Options - Change plan settings - Change advanced power settings - Display - Activate adaptive brightness setting.*.

Select *On* to activate the adaptive brightness setting with the help of the ambient light sensor.

Synchronizing the display on the touchscreen and an external monitor

In Windows 7, you can switch between touchscreen and external monitor, if you open *Control Panel - Windows Mobility Center*, section *External Display*.

In Windows 8.1 wipe your finger over the screen from the right-hand edge. The setting *Charms - Devices - Second monitor* opens. Select the desired output type.

You can also use the *Fujitsu Display Manager* in the *Windows Mobility Center* to set the output type.

Select display orientation (portrait or landscape format)

You can choose to use either portrait or landscape format for the display.

Windows 7

You can change these settings in the Fujitsu menu or under *Start* - (*Settings* -) *Control Panel* - *Hardware and Sound* - *Display* - *Settings*.

Windows 8.1

You can change these settings under *Windows 8.1 Desktop* - *Control Panel* - *Hardware and Sound* - *Windows Mobility Center / Rotate screen*.

In the *Fujitsu Tablet Controls* settings, profiles are saved for operation with different screen orientations. These profiles have preset standard configurations that can be modified as desired.

These settings do not just affect the screen settings on the Tablet PC, but also on external monitors that are connected.

Using fingers

You can execute certain commands by using your finger tip on the touchscreen of your device.

Alternatively, everything which you can select or activate using your finger tip can also be selected or activated using the stylus.

Calibrate the Dual Digitizer for finger-based operation of the device.

If Windows 8.1 is installed on your Tablet PC, your Tablet PC is already calibrated at initial setup.

If a different operating system is installed on your Tablet PC, you must calibrate it with your fingers before first use, so that it recognizes your fingertips as accurately as possible.

As soon as you notice that the accuracy is becoming worse, you must recalibrate the device.

Operating system	Menu
Windows 7 / Windows 8.1 Desktop	To calibrate, run the *Hardware and Sound / Tablet PC Settings* function in the Control Panel. You need to calibrate both portrait and landscape formats.

Actions with one finger (Windows 8.1 Pro)

Action	Description
Wipe your finger over the screen from the right-hand edge. 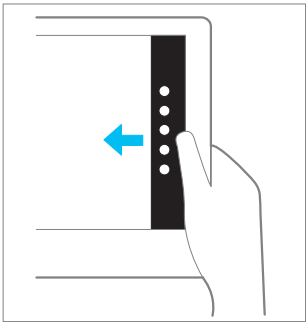	▶ Open Charms with system commands (equivalent to pressing the Windows button + C button). ▶ Working with the mouse: Position the mouse pointer at the bottom right-hand edge of the screen.
Wipe your finger over the screen from the left-hand edge. 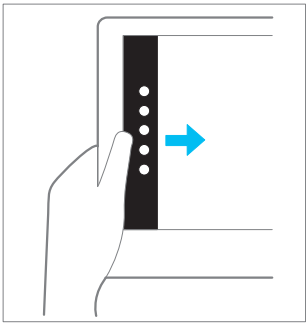	▶ Switch between the most recently used applications (equivalent to pressing the Windows button + Ctrl + Space). ▶ Working with the mouse: Position the mouse pointer at the bottom left-hand edge of the screen.
Wipe your finger over the screen from the top or bottom edge. 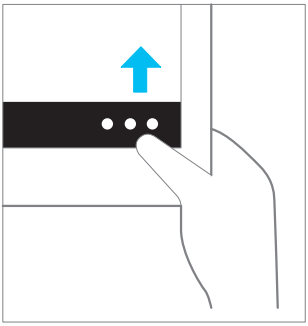	▶ Open the App commands (equivalent to pressing the Windows button + Z button). Wipe from the top to the bottom of the screen to dock or close the current App. ▶ Working with the mouse: Right-click on the App to display the App commands.

Action	Description
Press and hold 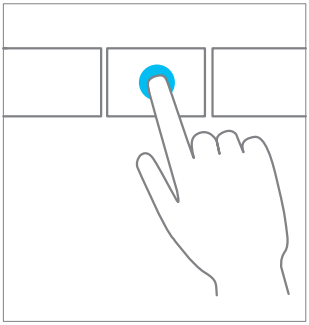	► Keep your finger pressed on an object on the screen to display a menu with further options. ► Working with the mouse: Move the mouse pointer over the object to display a menu with further options.
Tap on an object 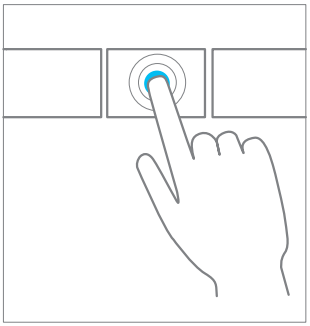	► Tap your finger on an object on the screen to open an App or a link or to execute a command. ► Working with the mouse: Left-click on the object.
Scroll / Move object / Swivel object 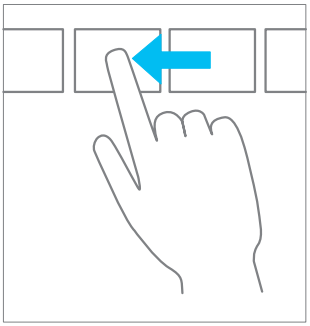	► Use this function to scroll through lists or websites or to swivel or move an object. ► Working with the mouse: Left-click on the object, keep the mouse button pressed and move / swivel the object or scroll.

Actions with one finger (Windows 7 / Windows 8.1 Desktop)

Action	Description
Selecting objects (click with the left mouse button)	► Tap once briefly with the finger on the object.
Starting programs (double-click with the left mouse button)	► Use one finger to tap twice in quick succession on the program symbol.
Moving objects/windows (while holding the left mouse button pressed, drag & drop)	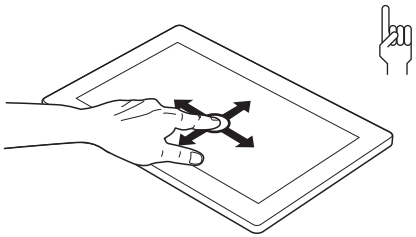 ► Place your finger on the object/window, keep your fingertip pressed against the touchscreen and move the desired object/window.
Opening a context menu (click with the right mouse button)	► Tap your finger on the desired item. Keep your fingertip pressed against the touchscreen. The context menu appears.
Moving the cursor	► Position one finger on the touchscreen and move your finger in the desired direction.

Actions with two fingers (Windows 7 / Windows 8.1 Desktop)

Action	Description
Scrolling	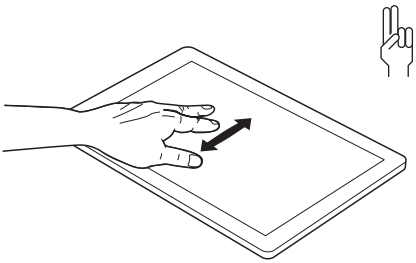 ► Place two fingers on the touchscreen. ► Move the fingers up to scroll up. or ► Move the fingers down to scroll down.
Rotating	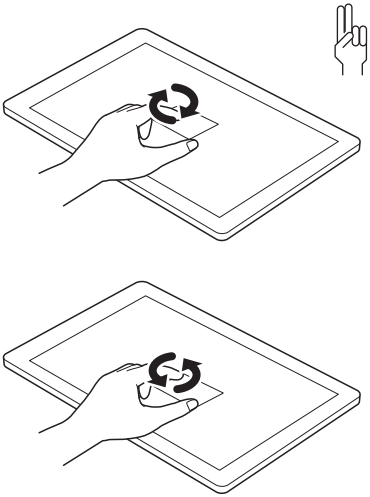 ► Position your thumb on the touchscreen and rotate the image clockwise or counter-clockwise using your index finger.

Action	Description
Increase or decrease view	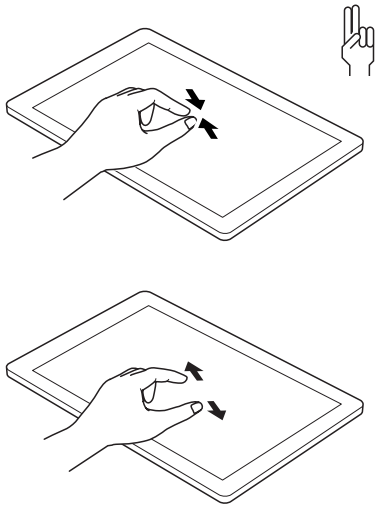 ► Put two fingers on the touch screen and move them apart to increase the size of the view. or ► Put two fingers on the touch screen and move them together to decrease the size of the view.
Lock context-sensitive menus	► Use two fingers to tap twice in quick succession on the touchscreen.

Using the stylus

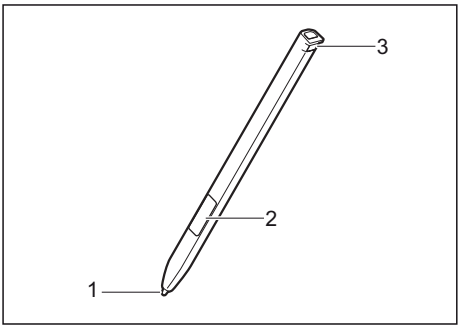

1 = stylus tip

2 = stylus button (right mouse button)

3 = eyelet for stylus cord

You can use the stylus on your Tablet PC as an electronic writing tool, to select menu items and to navigate through the programs. Programs that support handwriting recognition also allow you to write directly on the screen with the stylus. You can also use the stylus as a drawing tool.

The Tablet PC is supplied with a stylus tether which you can attach to the eyelets on the stylus and on the Tablet PC.

Use only the stylus that was provided with your Tablet PC. Do not use any other pointed object as a substitute, that was not specially designed for your Tablet PC. Replace the stylus tip if it is worn. The warranty does not cover a scratched screen.

While writing, you should take care that you do not scratch the surface of the display (e.g. with a wristwatch or bracelet).

The stylus of the Tablet PC is an electronic instrument that can be damaged if used improperly. Handle the stylus with care.

Our recommendations for proper handling of the stylus are as follows:

- Do not gesture with the stylus.
- Do not use the stylus as a pointer.
- Do not use the stylus on surfaces other than the screen of the Tablet PC.
- Do not try to turn the grip of the stylus. The grip is used to put the stylus into its slot and to take it out of its slot.
- Never store the stylus with its weight on the tip (e.g. with the tip down in a stylus container). If the stylus is stored with the tip pointing down, this may have an adverse effect on the stylus mechanism (particularly under high temperatures). In this case the stylus tip may react as though it is constantly being pressed down. To avoid damage, the stylus should be stored in the stylus slot when not in use.

The stylus can be influenced by electromagnetic fields (cursor quivers or jumps). There may be a few areas on the screen where the cursor quivers slightly in spite of pressing the stylus down firmly.

The screen responds to entries made with the tip of the finger or the stylus when the tip of the finger or the stylus directly touches the screen.

You can use the stylus to perform all functions for which you would otherwise use a mouse.

Delete functions are not supported by the stylus.

Action	Mouse	Stylus
Selecting menu items	Click with the left mouse button.	Tap on the menu entry with the tip of the stylus.
Starting programs	Double-click with the left mouse button.	Tap on the program symbol twice in rapid succession using the stylus tip.
Moving an object or window	Drag with the left mouse button pressed.	Place the stylus tip directly on the object or window. Keep the stylus tip held against the screen. Drag the desired object or window.
Opening a context menu	Click with the right mouse button.	Tap on the desired element with the stylus and keep the stylus pressed against the screen.
Moving the cursor	-	Place the tip of the stylus directly on the screen.

Stylus location

On delivery, the stylus is located in the stylus garage:

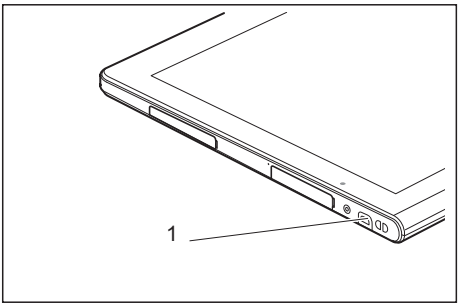

Adjusting the stylus

Operating system	Menu
Windows 7	Under *Hardware and Sound - Pen and Input Devices*, you can make various settings for the stylus in the control panel (assignment and function of the stylus button).
Windows 8.1	Under *Windows 8.1 Desktop - Control Panel - Hardware and Sound - Pen and Input Devices* you can make various settings for the stylus (assignment and function of the stylus button).

Calibrating the stylus

If Windows 8.1 is installed on your Tablet PC, your Tablet PC is already calibrated at initial setup.

If a different operating system is installed on your Tablet PC, you must calibrate it with the stylus before first use, so that it recognizes the stylus as accurately as possible.

You should also always repeat the calibration if the coordination between the stylus and the cursor movement deteriorates.

Operating system	Menu
Windows 7 / Windows 8.1 Desktop	To calibrate, run the *Hardware and Sound / Tablet PC Settings* function in the Control Panel. You need to calibrate both portrait and landscape formats.

Installing a stylus tether

You can attach the stylus with a stylus tether to prevent accidentally dropping it or losing it.

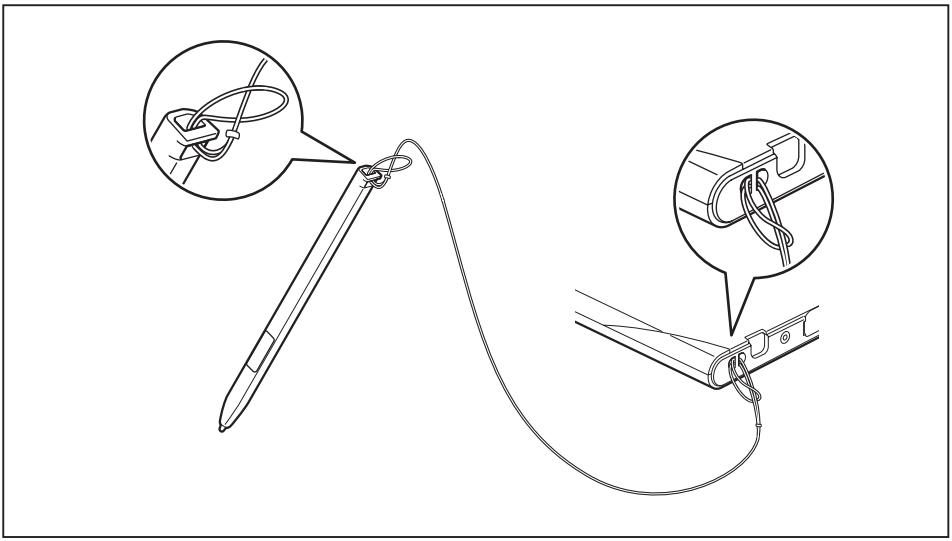

► Fasten the stylus tether to the stylus eyelet and to the eyelet on the Tablet PC.

Tablet buttons

Your Tablet PC is fitted with three tablet buttons.

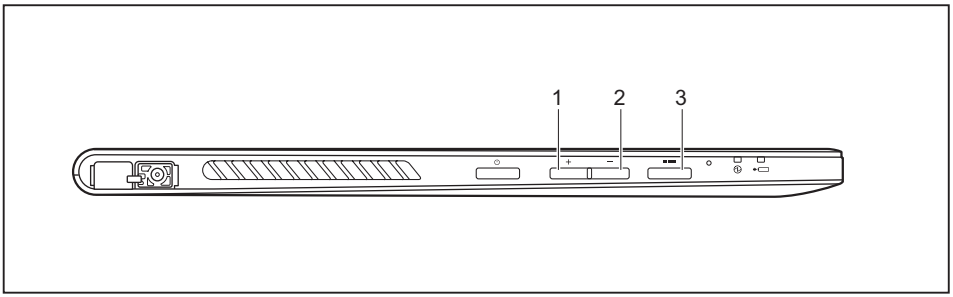

No.	Description	Functions
1	Increase volume button	Increase the volume
2	Decrease volume button	Decrease volume
3	Shortcut button	Start function manager or screen shot function

Webcam

Your device has two webcams: one on the front of the device and one on the rear.

The webcam has its own status indicator. The indicator lights up when the webcam is active.

Depending on the software used, you can use your webcam to take pictures, record video clips or take part in web chats.

- The picture quality depends on the lighting conditions and the software being used.
- You can only operate the webcam with a particular application (e.g. an Internet telephony program or a video conferencing program which supports a webcam).
- When using the webcam the support of the Tablet PC must not wobble.
- The webcam automatically adjusts itself to the current light level. For this reason, the touchscreen may flicker while the light level is adjusted.

Further information on use of the webcam and additional settings for your webcam can be found in the help function of the program using the webcam.

Rechargeable battery

The built-in battery provides the Tablet PC with the necessary power for use on the move. You can increase the service life of the battery by caring for the battery properly. The average battery service life is around 500 charge/discharge cycles.

You can extend the battery service life by taking advantage of the available energy-saving functions.

Charging and maintaining the battery

The Tablet PC battery can only be charged when the ambient temperature is between 5°C / 41 °F and max. 35°C / 95°F.

You can charge the battery by connecting the Tablet PC to the AC adapter (see "Connecting the AC adapter", Page 18).

If the battery is running low you will hear a warning alarm. If you do not connect the AC adapter within five minutes of hearing the warning alarm, your Tablet PC will switch off automatically.

Monitoring the battery state of charge

A battery symbol for monitoring the battery capacity is displayed in the system bar / status indicator. The battery symbol shows you the battery charge.

Using the energy saving functions

The Tablet PC uses less power when the energy saving features are enabled. You will then be able to work longer when using the battery before having to recharge it.

i

The energy efficiency is increased and environmental pollution is reduced. By choosing the best power options, you can make significant savings and at the same time help protect the environment.

We recommend the following settings:

Function	Operating on AC power	Operating on battery power
Turn off monitor	After 10 minutes	After 5 minutes
Turn off hard disk(s)	After 15 minutes	After 10 minutes
Energy saving (S3)	After 20 minutes	After 15 minutes
Hibernate mode (S4)	After 1 hour	After 30 minutes

► Set the energy saving functions in your Control Panel.
► Set the screen saver in your Control Panel.

or

► Keep a finger pressed on the desktop to display the context menu. Configure the screen saver under *Change screen saver*.

i

If you need further information about an option, you can get help with most settings by pressing the ? symbol in the upper right of the screen to open Microsoft Help.

When the Tablet PC is in a power-saving mode, you must remember the following:

i

During power-saving mode, open data is held in main memory or in a swap file on the hard disk.

Never switch off the Tablet PC while it is in a power-saving mode. If the built-in battery is nearly flat, close all open files and do not go into power-saving mode.

If you do not intend to use your Tablet PC for a long period of time:

► Exit the power-saving mode if necessary by touching the screen or by switching the Tablet PC on.
► Close all opened programs and completely shut down the Tablet PC.

Memory cards

Your Tablet PC is equipped with an integrated storage card reader. Use storage cards to enlarge the storage of your Tablet PC.

i

Follow the manufacturer's instructions when handling the memory cards.

Supported formats

The following formats are supported:

- Micro Secure Digital (Micro SD™ Card)
- Micro SDHC
- Micro SDXC

Inserting the memory card

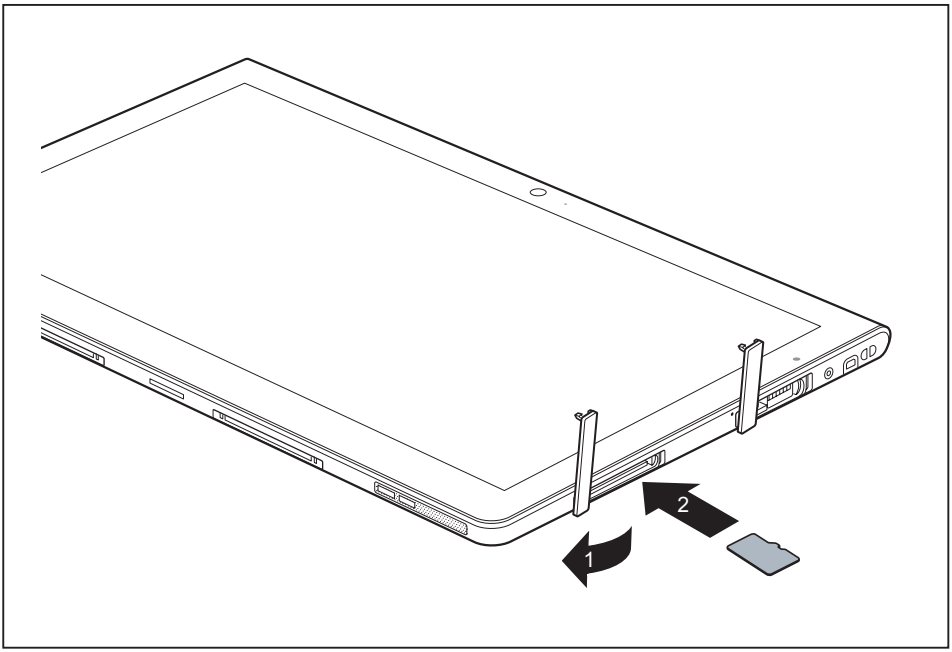

► Open the slot cover (1).

► Carefully slide the storage card into the slot (2). The label area must be facing upward. Do not apply any force, otherwise the delicate contact surfaces could be damaged.

► Close the slot cover.

Removing the memory card

To avoid any loss of data, always follow the correct procedure for removing the card (see the documentation for your operating system).

► Open the slot cover.

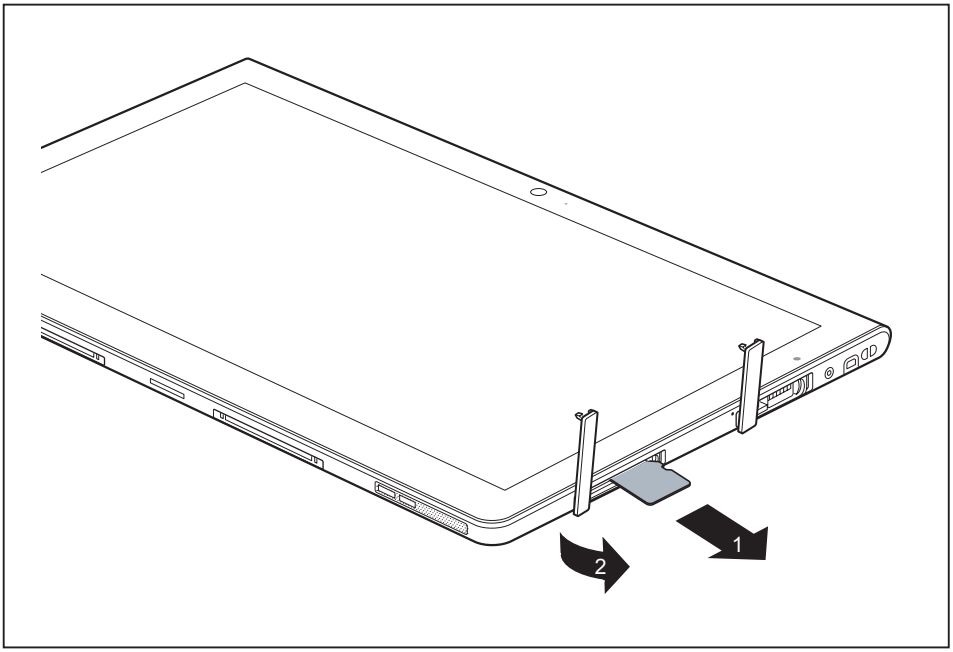

► Pull the storage card out of the slot (1).

► Close the slot cover (2).

SIM card

A SIM Card (Subscriber Identity Module) is a chip card which is inserted in a cellular phone or Tablet PC and, together with an integrated 4G module, enables access to a cellular radio network.

Follow the instructions supplied by the provider of the SIM card. If you do not feel the the SIM card engage as you insert it, use a pointed object to insert the SIM card.

Please note that the SIM card format must be micro-SIM (3FF). Other SIM card formats, such as full-size (1FF), mini-SIM (2FF) or nano-SIM (4FF) do not fit in the SIM card slot of your Tablet PC.

Please do not insert any other format of SIM card as they may become twisted, they could even damage the system.

Inserting a SIM card

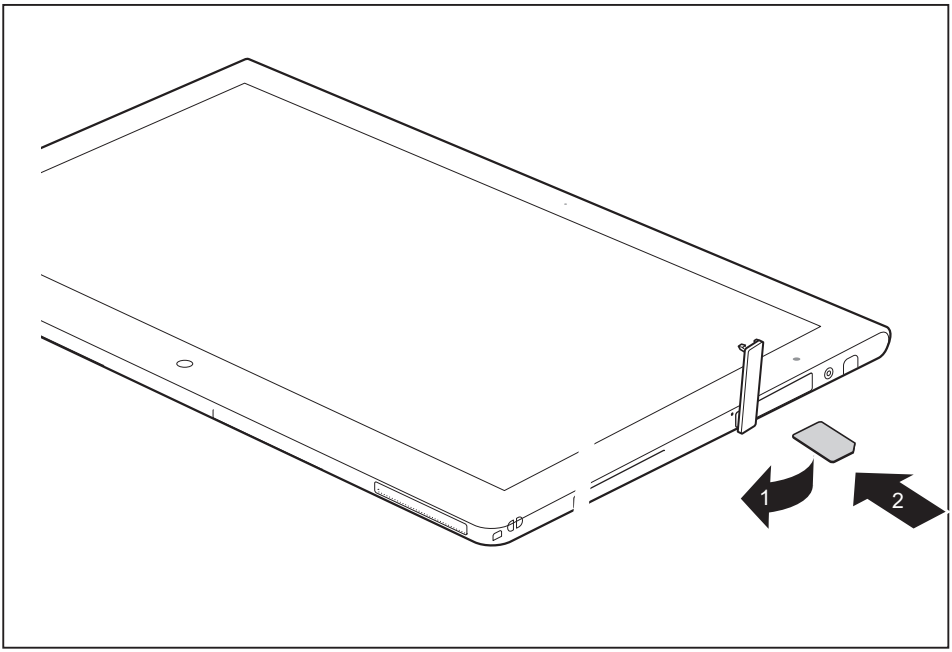

- ► Open the slot cover (1).
- ► Carefully push the SIM card into the slot (2) until the SIM card clicks into place. The label area must be facing upward. Do not apply any force, otherwise the delicate contact surfaces could be damaged.
- ► Close the slot cover.

Removing a SIM card

► Open the slot cover.

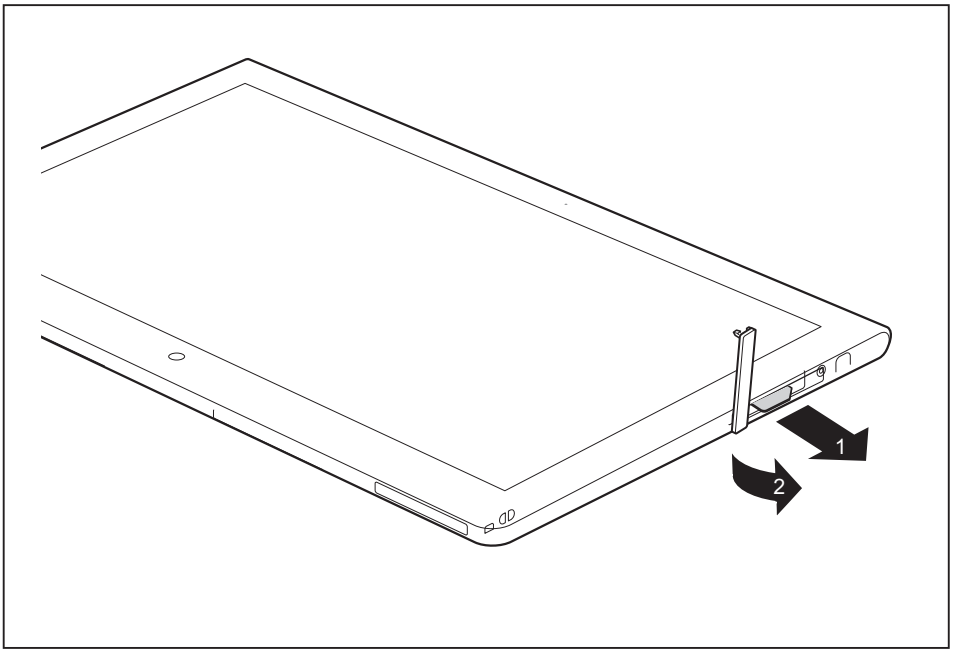

► Pull the SIM card out of the slot (1).

► Close the slot cover (2).

Wireless LAN/Bluetooth/4G/NFC wireless components

The installation of wireless components not approved by Fujitsu will invalidate the certifications issued for this device.

Switching the wireless components on and off

The wireless components are switched on and off using the appropriate functions of the operating system.

► To switch wireless components on and off individually, select *Settings – Change PC settings – Network – Airplane mode*.

Further information on WLAN and Bluetooth

For further information about WLAN or Bluetooth, see "Appendix: Miscellaneous Information".

For WLAN specifications, see chapter "WLAN specifications", Page 84.

Access via Wireless WAN

i

You can purchase the accessories for Wireless WAN reception from your Fujitsu dealer.

If you have ordered a Wireless WAN module, your device will already be prepared when you receive it.

You will find information on establishing the connection with the Wireless WAN network in the documentation for the hardware you plan to use.

NFC

Your Tablet PC is optionally equipped with an integrated NFC chip. Near Field Communication allows a contactless, wireless exchange of data at a short distance (a few centemetres).

Ethernet and LAN (only with performance docking cradle or keyboard docking station)

The internal network module of your Tablet PC supports Ethernet LAN. You can use it to establish a connection to a local network (LAN = Local Area Network).

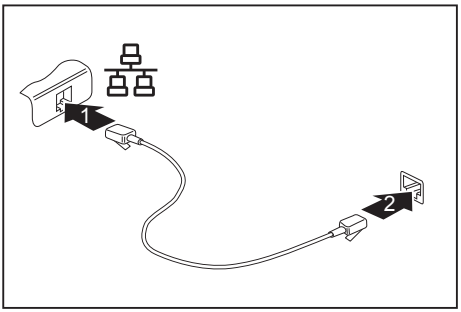

- ► Connect the network cable to the LAN port of the cradle (1).

or

- ► Connect the network cable to the LAN port of the keyboard docking station (1).
- ► Connect the network cable to your network connection (2).

i

Your network administrator can help you to configure and use the LAN connections.

The network cable is not included in the delivery scope. This type of cable can be obtained from a specialist dealer.

GPS

i

Whether your device has this function depends on the chosen equipment level.

Accessories for your Tablet PC (optional)

The following accessories are available for your Tablet PC:

- Performance docking cradle for charging the Tablet PC and with additional ports
- Keyboard cover
- Keyboard docking station
- VESA mounting attachment and hand strap
- Shoulder strap
- Folio case
- Micro USB adapters

The following sections provide more information on handling the accessories.

Your performance docking cradle (optional)

As well as fast charging, your performance docking cradle is a device that also allows you to quickly connect your Tablet PC to your peripherals such as a monitor, keyboard, mouse, etc. You only need to dock the Tablet PC to be able to work with your peripheral devices.

Cradle components

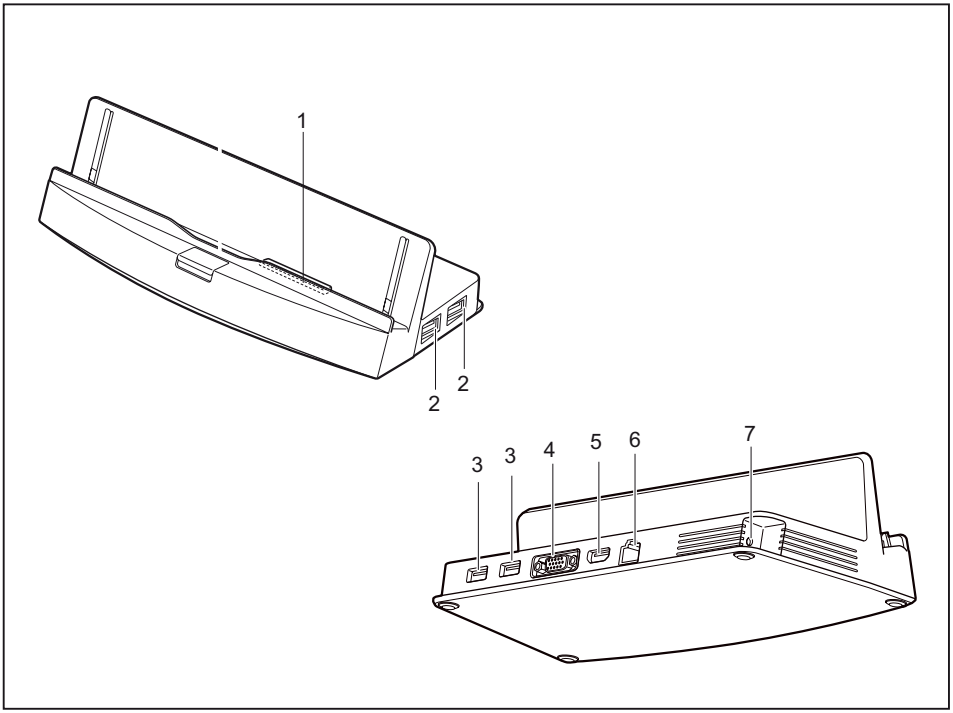

1 = Connector on the cradle for the docking port of the Tablet PC
2 = USB port 3.0
3 = USB port 3.0
4 = External monitor port (VGA)
5 = HDMI
6 = LAN port
7 = DC jack socket (DC IN)

Setting up the cradle

Select a suitable location for the cradle before setting it up. In doing so, please follow these instructions:

- Place the cradle on a flat, stable, non-slippery surface.
- Never place the cradle or the AC adapter on a heat-sensitive surface.
- Do not expose the cradle to extreme environmental conditions.
  Protect the cradle from dust, moisture and heat.

Connecting the Tablet PC to the cradle

It is possible to connect the Tablet PC to the cradle while it is running. To prevent problems, we recommend that you switch the Tablet PC off first.

Disconnect the AC adapter from the Tablet PC before connecting the Tablet PC to the cradle.

When the Tablet PC is connected to the cradle, you must connect the AC adapter to the cradle.

Information for using the performance docking cradle:

- If your Tablet PC is connected to the performance docking cradle, the micro USB port of the Tablet PC cannot be used. Use the alternative ports of the cradle.
- The HDMI and VGA ports of the performance docking cradle cannot be used at the same time. If devices are connected to both ports, only the device at the HDMI port can be used.
- The maximum supported resolution for VGA/HDMI is 1920 x 1080 pixels.

► Switch the Tablet PC off.
► Remove the AC plug of the AC adapter from the power outlet.
► Remove the AC adapter cable from the DC jack (DC IN) of the Tablet PC.

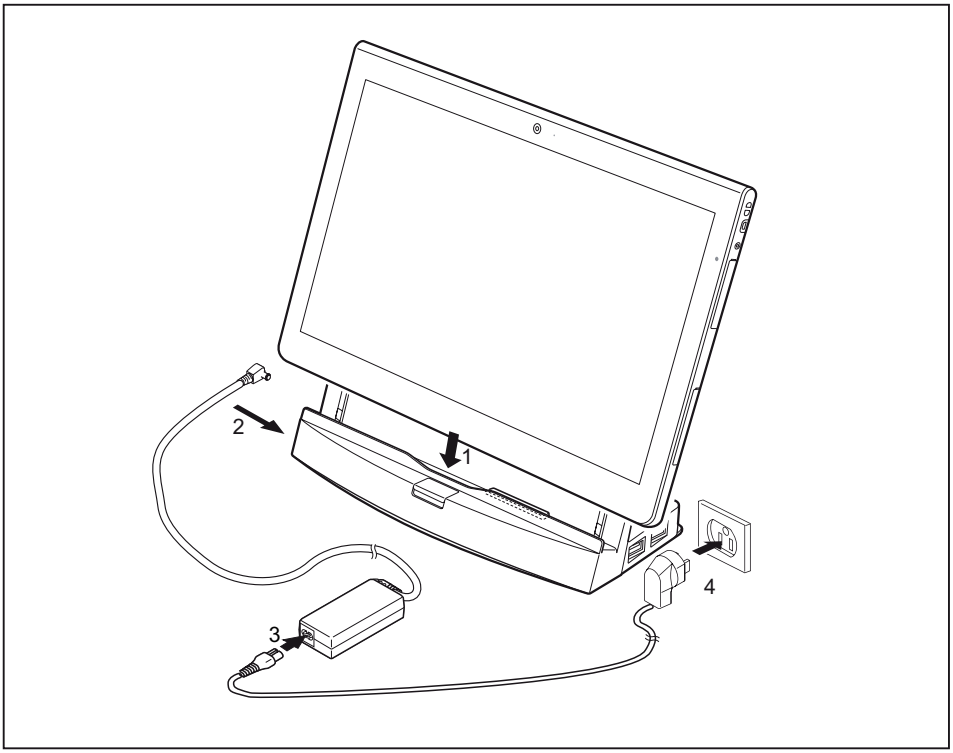

- ► Position the Tablet PC so that it aligns with the surface of the cradle.
- ► Push the Tablet PC on to the cradle in the direction of the arrow (1) until you feel it engage on the connector.
- ► Plug the AC adapter cable into the DC jack (DC IN) on the cradle (2).
- ► Connect the AC cable to the AC adapter (3).
- ► Plug the AC cable into the power outlet (4).

Disconnecting the Tablet PC from the cradle

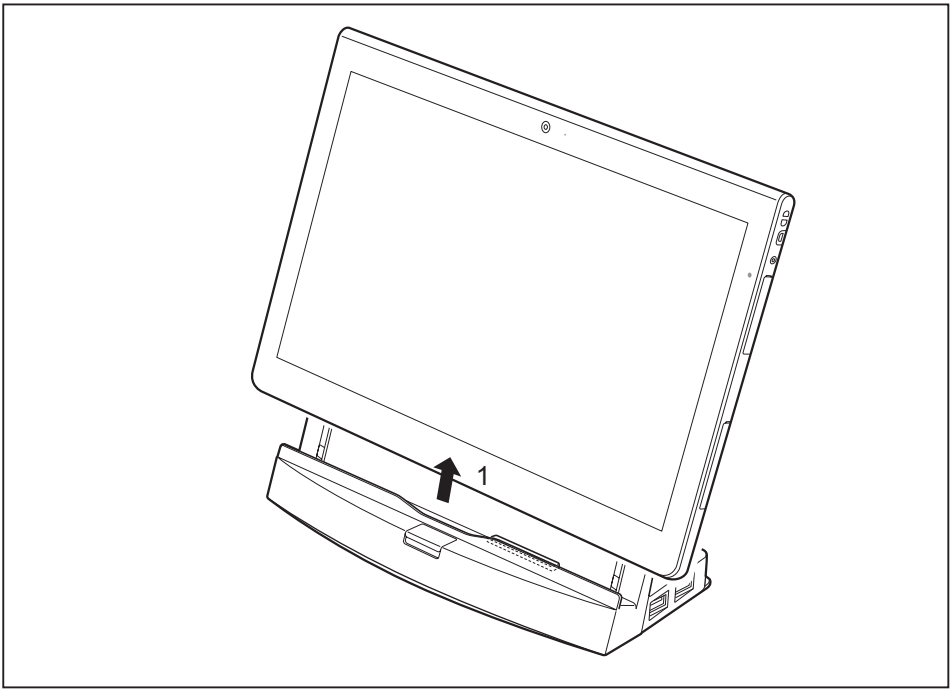

► While holding down the lower part of the cradle, lift the Tablet PC from the cradle in the direction of the arrow (1).

Keyboard cover (optional)

The keyboard cover is optimized for the convenient input of text. It only needs to be docked with the Tablet PC.

Keyboard cover components

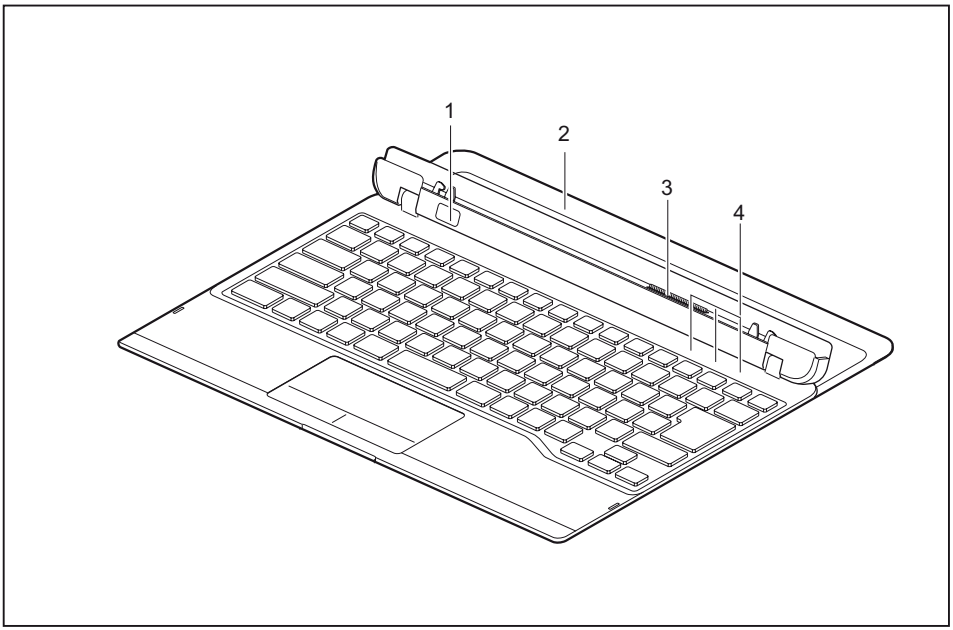

1 = Slide-out button
2 = Extending stand (in extended state)
3 = Docking connector for the Tablet PC
4 = Status indicators (Num Lock, Caps Lock, Scroll Lock)

Connecting the Tablet PC to the keyboard cover

► Place the keyboard cover on a smooth and level surface. Make sure that the stand is fully extended.

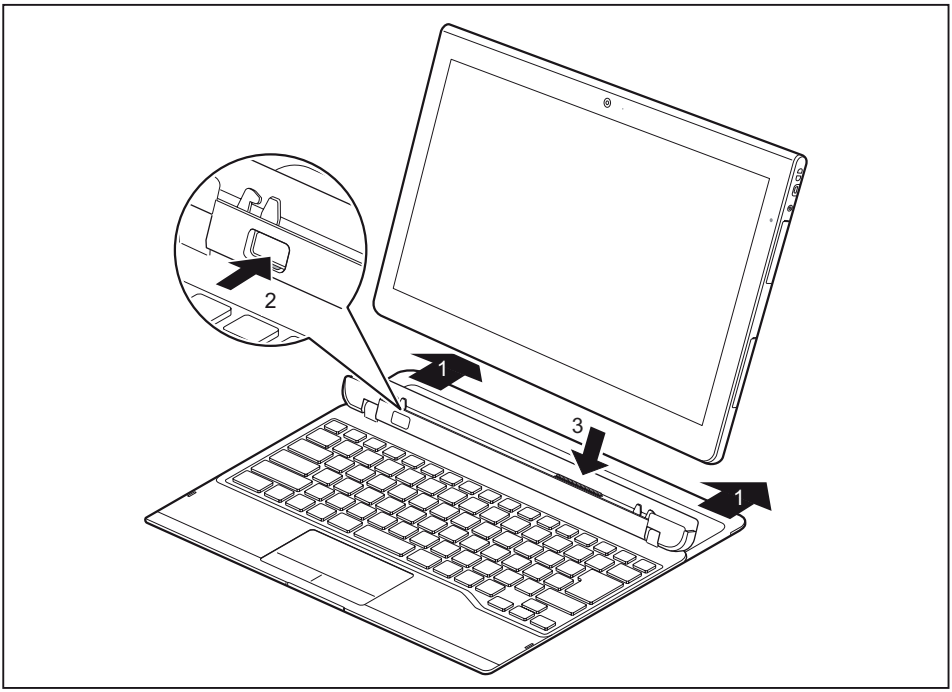

To prevent the Tablet PC from tipping over and becoming damaged, always make sure that the stand is fully extended when you use the keyboard cover.

► Completely pull out the extending stand (1).

► Press the slide-out button (2) until it firmly remains in pressed position (red marking visible).

► Push the Tablet PC onto the keyboard cover in the direction of the arrow until you feel it engage on the connector (3).

Separating the Tablet PC from the keyboard cover

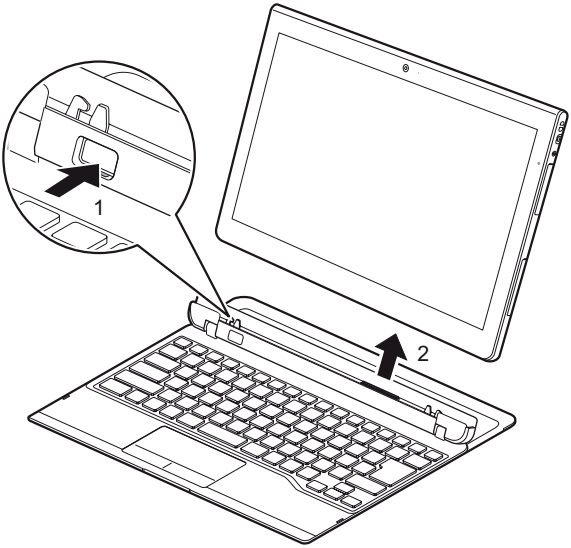

► Keep the slide-out button pressed (1).

► Lift the Tablet PC away from the keyboard cover in the direction of the arrow (2).

Keyboard docking station (optional)

The keyboard docking station is a device which has been optimized for convenient input of texts and allows external devices to be connected. It only needs to be docked with the Tablet PC.

Ports on the keyboard docking station

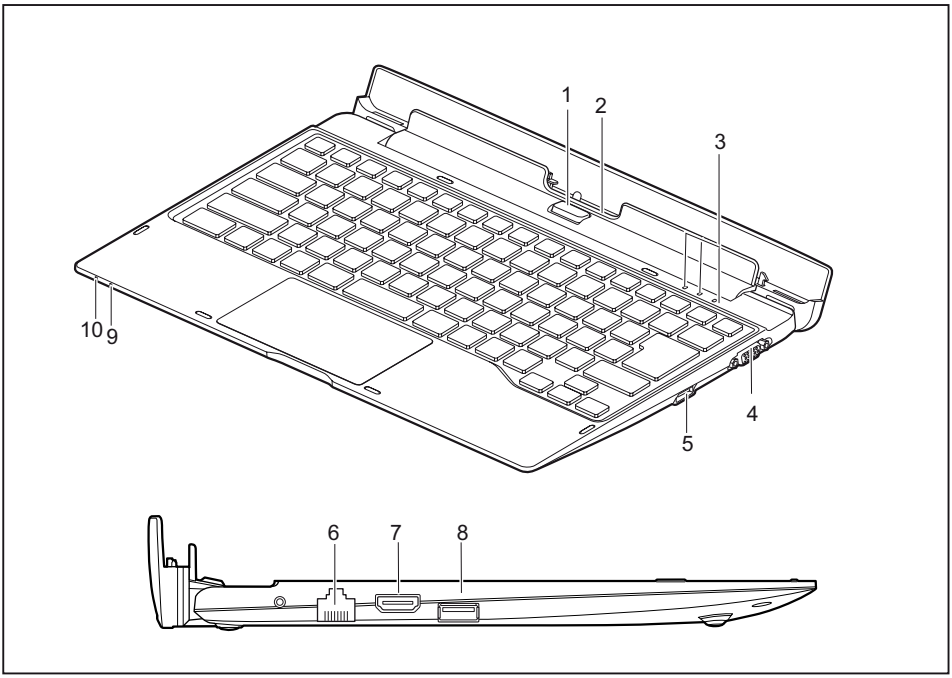

1 = Slide-out button
2 = Docking port for the Tablet PC
3 = Status indicators (Num Lock, Caps Lock, Scroll Lock)
4 = External monitor port (VGA)
5 = USB port (USB 3.0)
6 = LAN port
7 = HDMI port
8 = USB port (USB 3.0)
9 = Battery indicator
10 = Battery charging indicator

Status indicators

Status indicator	Description
Battery indicator	The battery indicator shows the state of charge of the battery. • The indicator lights up white: The battery is between 50% and 100% charged. • The indicator lights up orange: The battery is between 13 % and 49 % charged. • The indicator lights up red: The battery is between 0 % and 12 % charged.
Battery charging indicator	The battery charging indicator shows whether the battery is being charged. • The indicator lights up red: The AC adapter is connected and the battery is being charged. • The indicator lights up white: The AC adapter is connected and the battery is fully charged / is not being charged. • The indicator is not lit up: The AC adapter is not connected.

Connecting the Tablet PC to the keyboard docking station

► Position the keyboard docking station as shown.

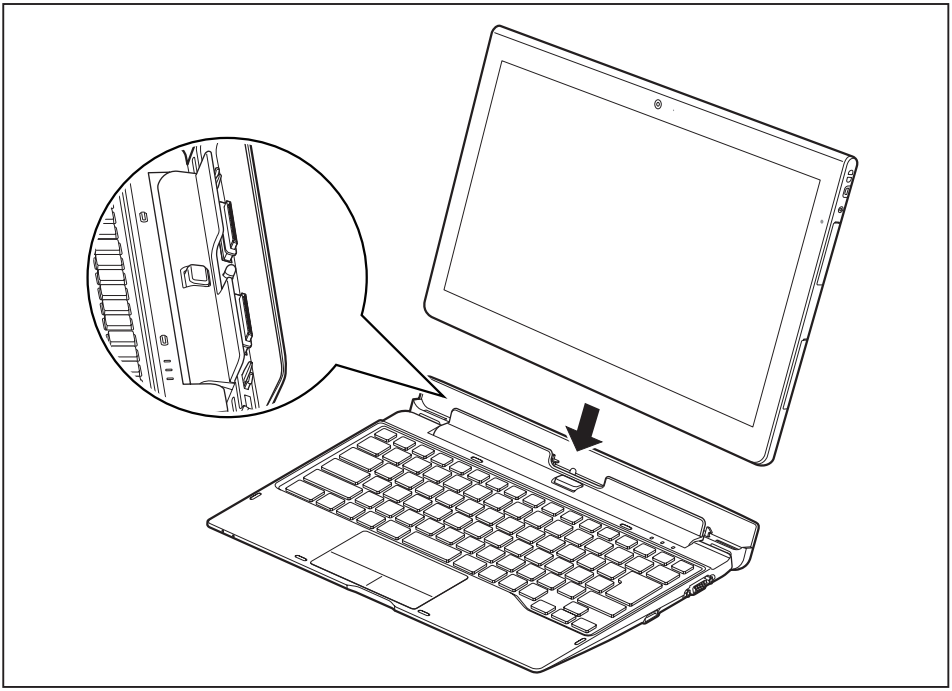

► Push the Tablet PC onto the keyboard docking station in the direction of the arrow until you feel it engage on the connector.

Separating the Tablet PC from the keyboard docking station

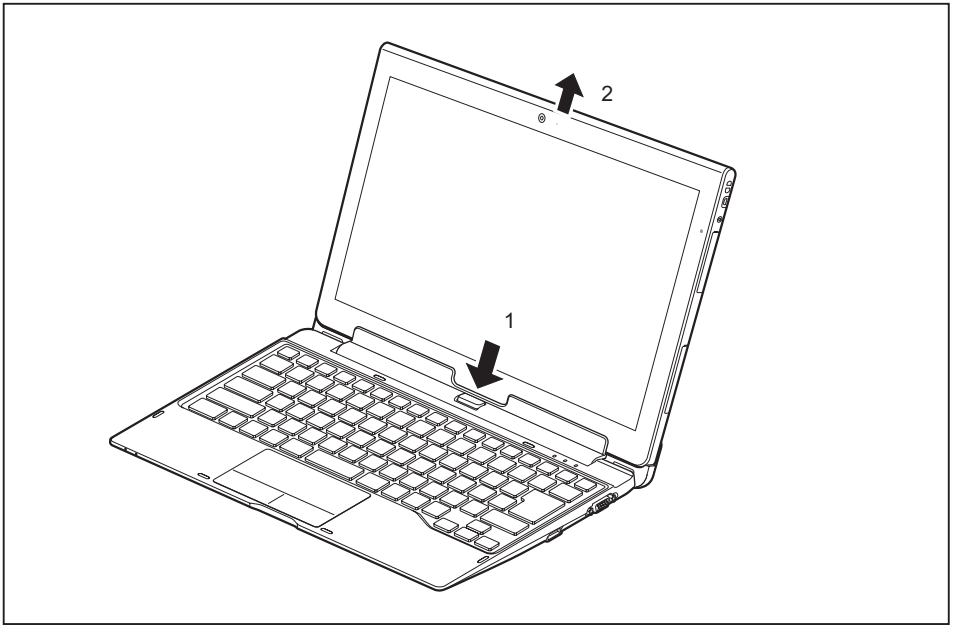

► Keep the unlocking button pressed (1).

► Lift the Tablet PC away from the keyboard docking station in the direction of the arrow (2).

VESA mounting attachment (optional)

Use the VESA mounting attachment to secure the Tablet PC to a monitor with the corresponding screw holes.

- Use the appropriate tool of the correct size when securing the screws: Use a No. 0 cross slot screwdriver.
- Keep the screws out of the reach of children.

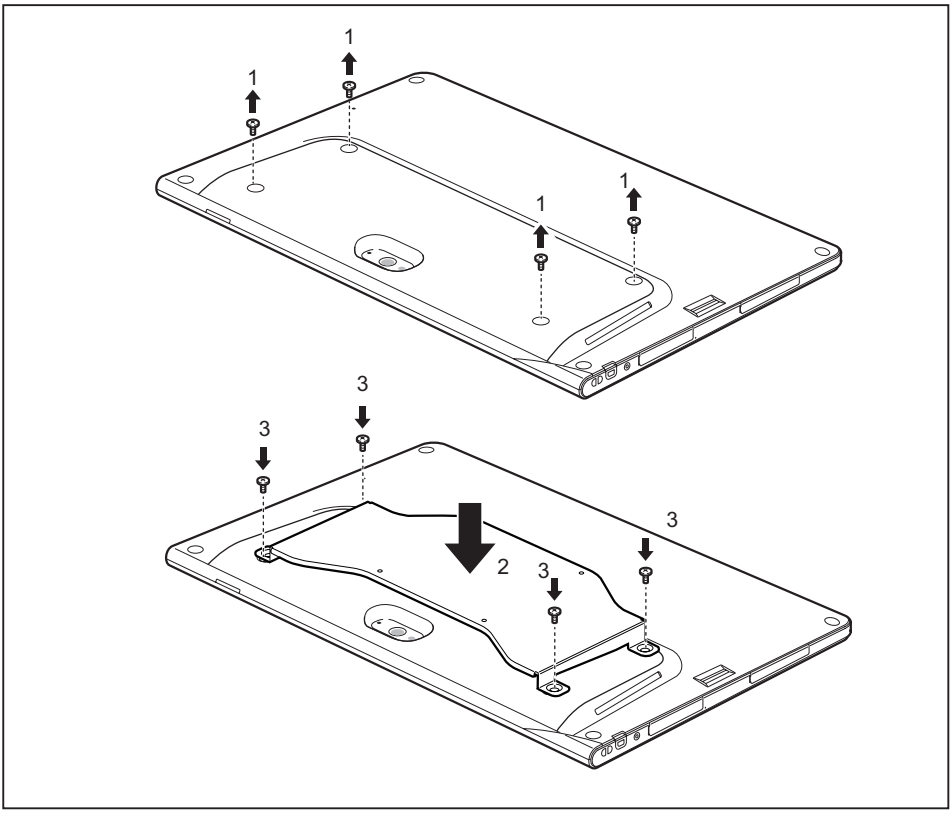

► Remove the 4 screws (1).

► Position the VESA mounting attachment on the Tablet PC (2). Make sure that the screw holes of the VESA mounting attachment and of the Tablet PC lie exactly on top of each other.

► Secure the VESA mounting attachment using the screws (3).

Hand strap (optional)

- Use the appropriate tool of the correct size when securing the screws.
- Keep the screws out of the reach of children.
- Do not shake the device too much when you are holding it on the hand strap, otherwise it may fall down.

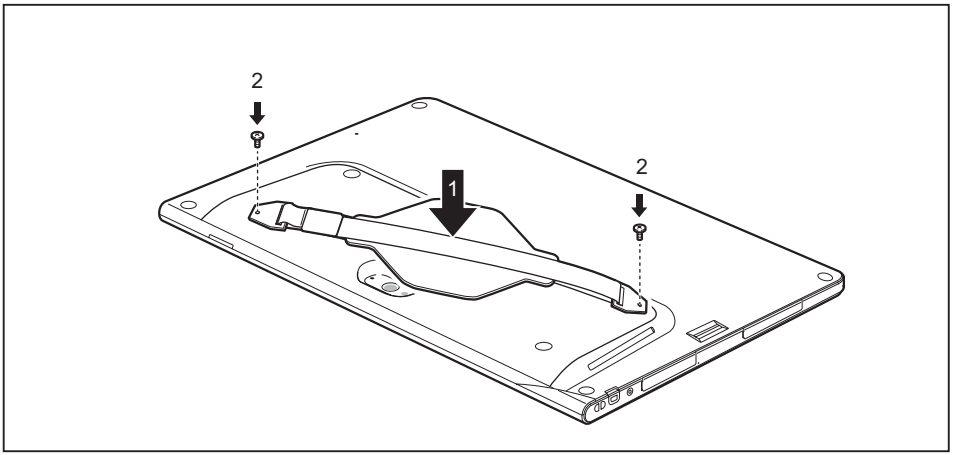

► Position the hand strap on the Tablet PC (1). Make sure that the screw holes of the hand strap and of the Tablet PC lie exactly on top of each other.

► Secure the hand strap with the screws (2).

Shoulder strap (optional)

- Use the appropriate tool of the correct size when securing the screws.
- Keep the screws and mountings out of the reach of children.
- Do not use motorized screw driver so to not damage the screws

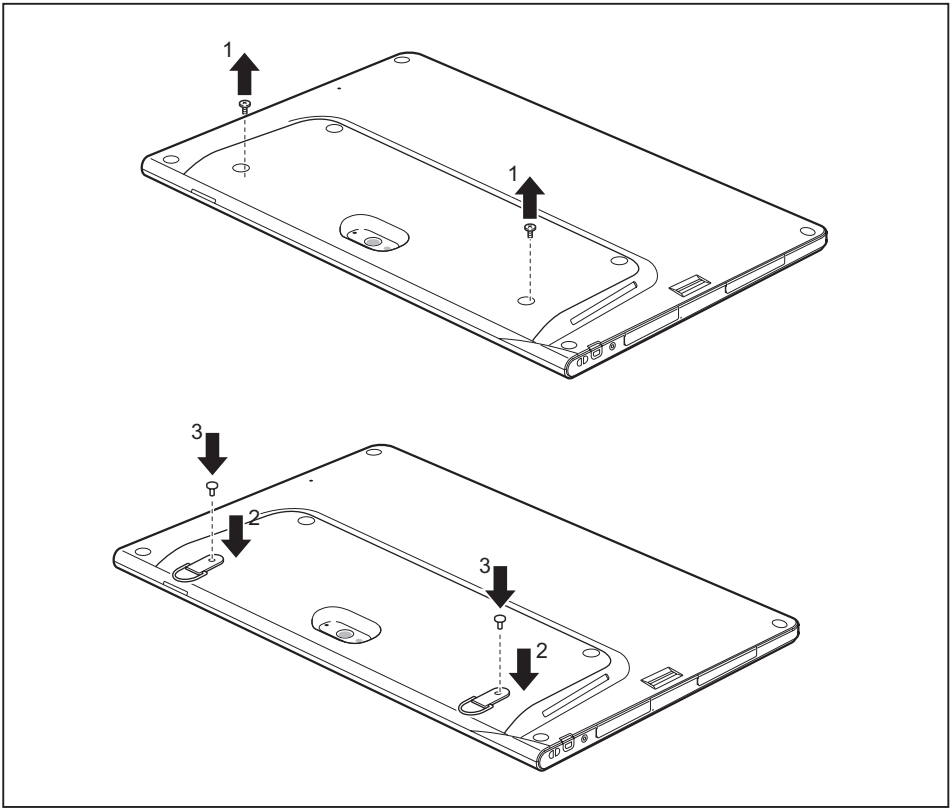

► Remove the screws (1).
► Position the fittings (2).
► Secure the fittings using the screws (3).

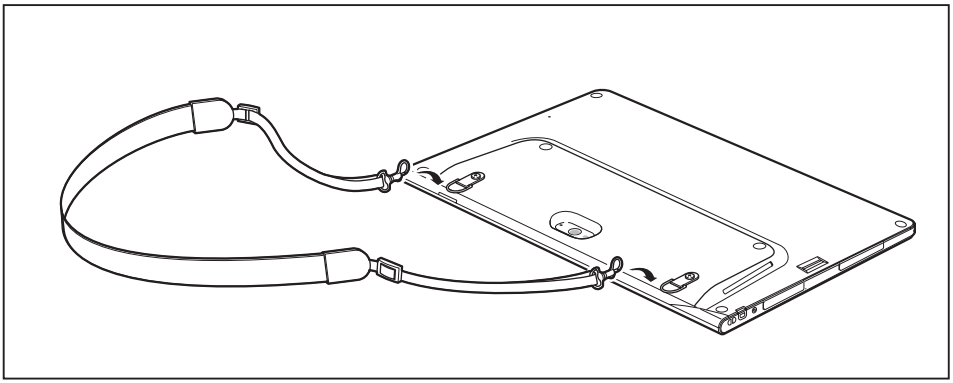

► Secure the shoulder strap to the fittings.

Folio case (optional)

- The folio case contains magnets. Keep away from objects that may be easily affected by the influence of magnetism.
- LCD may be accidently turned on if the cover is not properly closed.
- Make sure the unit is firmly fitted into the folio case fasteners so it will not fall out.
- This folio case is only designed to contain and carry this unit. Do not use it for any other purpose.
- Do not put the folio case in a direct sunlight or expose to high temperature and humidity.

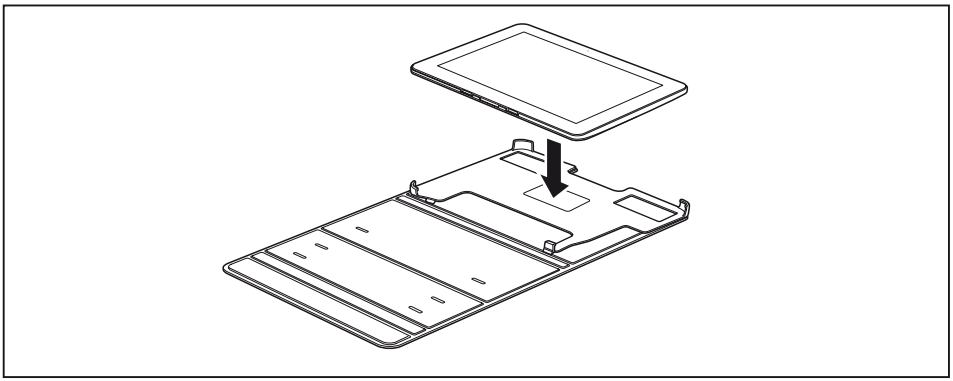

► Position the Tablet PC on the folio case as shown.

► Engage the top edge and then press it down.

The following illustration shows you the many ways in which the folio case can be used:

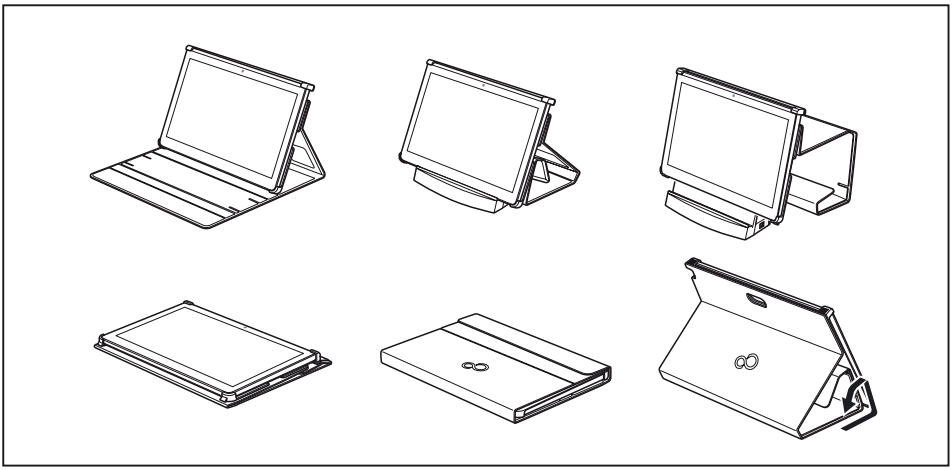

Micro USB adapters

5 USB adapters are available for the device:

Micro USB to USB adapter	
Micro USB to HDMI adapter	

Micro USB to VGA adapter	
Micro USB to Display Port adapter	
Micro USB to LAN adapter	

For technical specifications, see chapter "Micro USB adapters (optional)", Page 87.

Security functions

Your Tablet PC has several security features that you can use to secure your system and your personal data from unauthorized access.

This chapter explains how to use these functions, and what the benefits are.

Please remember that in some cases - for example, forgetting your password - you may be locked out of the system and unable to access your data. Therefore, please note the following information:

- Back up your data on external data carriers at regular intervals.
- Some security functions need you to choose passwords. Make a note of the passwords and keep them in a safe place.

If you forget your passwords you will need to contact our Service Desk. Deletion or resetting of passwords are not covered by your warranty and a charge will be made for assistance.

Configuring the fingerprint sensor

The fingerprint sensor can record the image of a fingerprint. With additional fingerprint software, this image can be processed and used instead of a password.

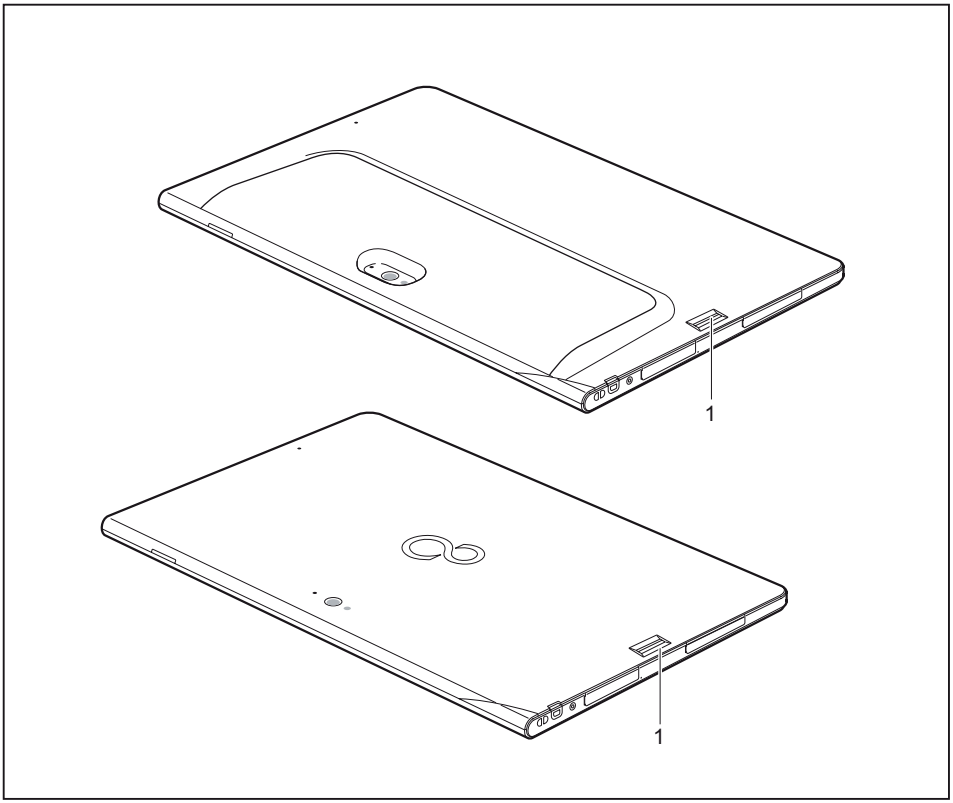

► Install the fingerprint software to be able to use the fingerprint sensor (1).

i

You can obtain further information on the fingerprint sensor in the "appendix: Miscellaneous Information".

Configuring password protection in BIOS Setup Utility

Before using the various options for password protection in the *BIOS Setup Utility*, please proceed as follows to increase data security:

Make a note of the passwords and keep them in a safe place. If you forget your supervisor HDD password you will not be able to access your Tablet PC. Deletion of passwords is not covered by your warranty and a charge will therefore be made for assistance.

Your password can be up to eight characters long and can contain letters and numbers. No distinction is made between uppercase and lowercase.

Protecting BIOS Setup Utility (supervisor HDD password and user HDD password)

If you have opened these operating instructions on the screen, we recommend that you print them out. You cannot call up the instructions on the screen while you are setting up the password.

The supervisor HDD password and the user HDD password both prevent unauthorized use of the *BIOS Setup Utility*. The supervisor HDD password allows you to access all of the functions of the *BIOS Setup Utility*, while the user HDD password will only give you access to some of the functions. You can only set a user HDD password when a supervisor HDD password has already been assigned.

Calling and using the *BIOS Setup Utility* is described in the chapter "Settings in BIOS Setup Utility", Page 72.

Assigning the supervisor and user passwords

- ► Start the *BIOS Setup Utility* and go to the *Security* menu.
- ► Select the *Set Supervisor Password* field and press the Enter key.
- ↳ With *Enter new Password*: you are asked to enter a password.
- ► Enter the password and press the Enter key.
- ↳ *Confirm new Password* requires you to confirm the password.
- ► Enter the password again and press the Enter key.
- ↳ *Changes have been saved* is displayed as a confirmation that the new password has been saved.
- ► To set the user password, select *Set User Password* and proceed exactly as when configuring the supervisor password.
- ↳ If you do not want to change any other settings, you can exit *BIOS Setup Utility*.
- ► In the *Exit* menu, select the option *Save Changes & Exit*.
- ► Select *Yes* and press the Enter key.
- ↳ The Tablet PC is rebooted and the new password is effective. It will now be necessary to first enter your supervisor or user password in order to open the *BIOS Setup Utility*. Please note that the user password only provides access to a few of the BIOS settings.

Changing the supervisor HDD password or user HDD password

You can only change the supervisor HDD password when you have logged into the *BIOS Setup Utility* with the supervisor HDD password.

► Start the *BIOS Setup Utility* and go to the *Security* menu.
► When changing the password, proceed exactly as when assigning a password.

Removing passwords

To remove a password (without setting a new password) perform the following steps:

► Start the *BIOS Setup Utility* and go to the *Security* menu.
► Highlight the *Set Supervisor Password* or *Set User Password* field and press the Enter key.
↳ You will be requested to enter the current password by the *Enter Current Password* prompt. *Enter New Password* will appear and you will be requested to enter a new password.
► Press the Enter key twice at this request.
► In the *Exit* menu, select the option *Save Changes & Exit*.
► Select *Yes* and press the Enter key.
↳ The Tablet PC is rebooted and the password is removed.
Removing the supervisor password simultaneously deactivates the user password.

Password protection for booting the operating system

i

You can also prevent booting of the operating system with the supervisor HDD password you have set in the *BIOS Setup Utility* (see section "Assigning the supervisor and user passwords", Page 63).

Activating system protection

► Start the *BIOS Setup Utility* and go to the *Security* menu.
► Select the *Password on Boot* option and press the Enter key.
► Select the option you require (*Disabled*, *First Boot* or *Every Boot*) and press the enter key
► Select the *Save Changes & Exit* option under *Exit*.
↳ The Tablet PC reboots. You will be prompted to enter your password (the supervisor password).

Deactivating system protection

► Start the *BIOS Setup Utility* and go to the *Security* menu.
► Select the *Password on Boot* option and press the Enter key.
► Select the *Disabled* option and press the Enter key.
↳ If you do not want to change any other settings, you can exit *BIOS Setup Utility*.
► Select the *Save Changes & Exit* option under *Exit*.
↳ The Tablet PC reboots. The system is no longer password protected.

Password protection for the hard disk

i

The hard disk password prevents unauthorized access to the hard disk drives and is checked internally each time the system is booted. The condition for this is that you have assigned at least the supervisor HDD password.

Activating hard disk protection

► Call up the *BIOS Setup* and select the *Security* menu.

↳ If you have not assigned BIOS passwords yet, define the supervisor and the user password now, if desired (see "Security functions", Page 61).

► Mark the *Hard Disk Security* field and press the Enter key.

► In the area *Drive0*, mark the field *Set Master Password* and press the Enter key.

↳ *Enter new Password* then appears and you are asked to enter a password.

► Enter the password and press the Enter key.

↳ *Confirm new Password* requires you to confirm the password.

► Enter the password again and press the Enter key.

↳ With *Setup Notice: Changes have been saved* you receive confirmation that the new password has been saved.

► If you wish to enter a password for a second hard disk (*Drive1*), in the area *Drive1* mark the field *Set Master Password* and proceed in exactly the same way as for the set up of the first hard disk (*Drive0*).

↳ The field *Password Entry on Boot* is set to *Enabled* by default. You can exit the *BIOS Setup* once you have finished changing the settings.

► From the *Exit* menu, choose the option *Exit Saving Changes*.

► Press the Enter key and select *Yes*.

↳ The Tablet PC reboots and your hard disk is now protected with a password. The password prompt is enabled as soon as the Tablet PC has rebooted.

Deactivating hard disk protection

To cancel a password (without setting a new password) proceed as follows:

► Call up the *BIOS Setup* and select the *Security* menu.

► Mark the *Hard Disk Security* field and press the Enter key.

► In the area *Drive0*, mark the field *Set Master Password* and press the Enter key.

↳ With the prompt *Enter current Password* you are first asked to enter the old password again. With *Enter new Password* you are then prompted to enter a new password.

► After the request, press the Enter key three times.

► From the *Exit* menu, choose the option *Exit Saving Changes*.

► Press the Enter key and select *Yes*.

↳ The Tablet PC reboots and there is no longer any password protection for this hard disk.

► If you wish to remove a password for a second hard disk (*Drive1*), in the area *Drive1* mark the field *Set Master Password* and proceed in exactly the same way as for the removal of the first hard disk (*Drive0*).

Smart Card reader (optional)

Smart Cards are not supplied as standard equipment. You can use all Smart Cards that comply with the ISO standard 7816-1, -2 or -3. These Smart Cards are available from various manufacturers.

With the appropriate software you can use your Smart Card as an alternative to password protection, but also as a digital signature, for encrypting your e-mails or for home banking.

We recommend that you always use two Smart Cards. Always keep one of the Smart Cards in a safe place if you are carrying the other Smart Card with you.

In order to be able to take advantage of all the security features of your Tablet PC, you will need a CardOS Smart Card from Fujitsu.

i

The Smart Card can only be used with a PIN, so maximum protection is maintained even when the Smart Card is lost. In order to maximize your security, the CardOS Smart Card is disabled if three incorrect attempts are made to enter the PIN.

During first time use of your CardOS Smart Card, you must either enter the preset PIN "12345678" or the PIN which has been notified to you by your system administrator.

Inserting the Smart Card

Do not use force when inserting and removing the Smart Card.

Make sure that foreign objects do not fall into the Smart Card reader.

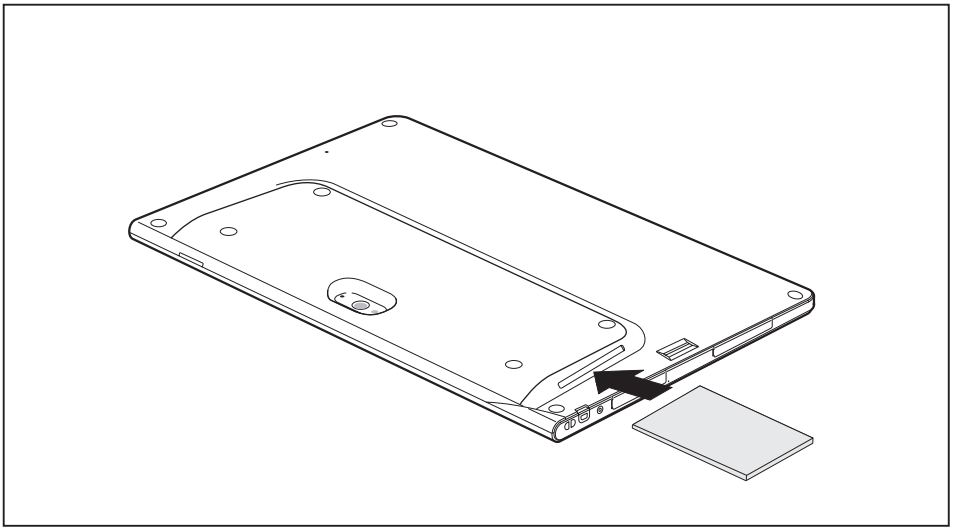

► Push the Smart Card into the Smart Card reader with the chip facing the rear of the Tablet PC.

Trusted Platform Module - TPM (device dependent)

To use the TPM, you **must** enable the TPM in the *BIOS Setup* before the software is installed. The requirement for this is that you have assigned at least the supervisor HDD password (see "Security functions", Page 61).

Enabling TPM

- Requirement: You have assigned a supervisor HDD password (see "Security functions", Page 61).

► Call BIOS Setup and select the *Security* menu.

► Mark the *TPM Security Chip Setting* field and press the Enter key.

► Select the entry *Enabled* to enable the TPM

↳ Once you have enabled the TPM the *Clear Security Chip* menu item appears.

You can clear the holder in the TPM using *Clear Security Chip*. With *Enabled*, all secret keys (e.g. SRK - Storage Root Keys, AIK - Attestation Identity Keys etc.) generated by applications are deleted.

Take note that you can then no longer access the data you have encrypted on the holder-based keys!

► Select the *Exit Saving Changes* option in the Exit menu.

► Press the Enter key and select *Yes*.

↳ The Tablet PC restarts and the TPM is enabled after the reboot.

Disabling TPM

- Requirement: You have assigned a supervisor HDD password (see "Security functions", Page 61).

► Call BIOS Setup and select the *Security* menu.

► Mark the *TPM Security Chip Setting* field and press the Enter key.

► Select the entry *Disabled* to disable the TPM.

► From the *Exit* menu, choose the option *Exit Saving Changes*.

► Press the Enter key and select *Yes*.

↳ The Tablet PC is rebooted and the TPM is disabled.

Connecting external devices

Under all circumstances, please observe the safety notes provided in the "Important notes", Page 12 chapter before connecting or disconnecting any devices to or from your Tablet PC.

Always read the documentation supplied with the device you wish to connect.

Never connect or disconnect cables during a thunderstorm.

Never pull at a cable when disconnecting it. Always grasp the plug.

Follow the order described below when you connect external devices to the Tablet PC or separate them from it:

With some devices, such as USB devices, it is not necessary to switch off the Tablet PC and the device before connecting/disconnecting. For more information about whether or not devices need to be switched off, please refer to the documentation supplied with your external device.

Some of the external devices require special drivers (see the operating system and external device documentation).

Connecting devices to the Tablet PC (or to the cradle / keyboard docking station).

1. Switch off the Tablet PC and all the external devices.
2. Disconnect the AC plugs for the Tablet PC and all the affected devices from the power outlets.
3. Connect the cables for all the external devices according to the instructions.
4. Plug all the AC plugs into the power outlets.

Disconnecting devices from the Tablet PC (or from the cradle / keyboard docking station)

1. Switch off the Tablet PC and all the external devices.
2. Disconnect the AC plugs for the Tablet PC and all the affected devices from the power outlets.
3. Disconnect the cables for all the external devices following the instructions.

Connecting an external monitor

HDMI port (only performance docking cradle and keyboard docking station)

The HDMI port can be used to connect an external amplifier, LCD TV or a plasma TV with an HDMI connection.

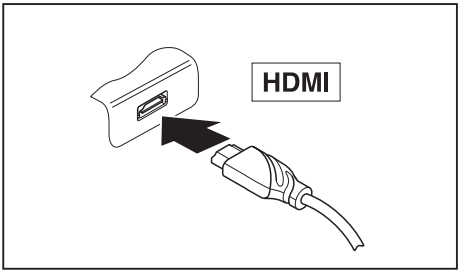

- ► Connect the data cable to the external device.
- ► Connect the data cable to the HDMI port.

Some LCD televisions have only two speakers/speaker ports and therefore cannot reproduce Dolby Digital or DTS. To play back HDMI sound, you must change the HDMI sound settings accordingly.

You can find the settings under *Control Panel - Hardware and Sound*. Deactivate the settings for DTS Audio and Dolby Digital to enable playback of HDMI sound.

External monitor port (VGA) (only performance docking cradle and keyboard docking station)

An analog monitor is connected to the analog external monitor port (VGA). Screen output is limited to a maximum of two screens at the same time.

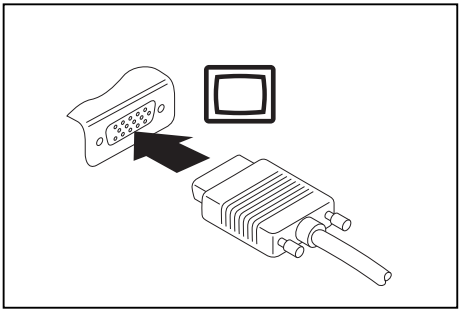

- ► Switch off the Tablet PC and the external monitor.
- ► Plug the data cable of the external monitor into the monitor port.
- ► First switch on the external monitor and then switch on the Tablet PC.

You can also switch back and forth between the external monitor and the LCD screen of the Tablet PC, see "Touchscreen", Page 24.

You can display the same image on the external monitor and on the LCD screen of the Tablet PC at the same time.

Connecting USB devices

On the USB ports you can connect external devices that also have a USB port (e.g. a DVD drive, a printer, a scanner or a modem).

USB devices are hot-pluggable. This means you can connect and disconnect the cables of USB devices while the operating system is running.

USB 1.x has a maximum data transfer rate of 12 Mbps.

USB 2.0 has a data transfer rate of up to 480 Mbps.

USB 3.0 has a data transfer rate of up to 5 Gbps.

Additional information can be found in the documentation for the USB devices.

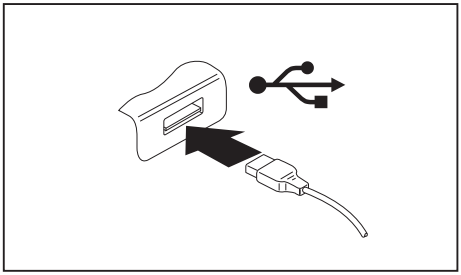

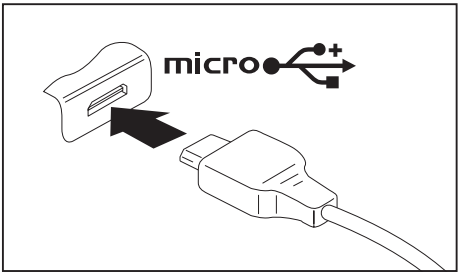

► Connect the data cable to the external device.
► Connect the data cable to a USB port (Tablet PC, keyboard docking station or cradle) or micro USB port (only on Tablet PC).

Device drivers

USB devices will be automatically recognized and installed by your operating system.

How to remove USB devices correctly

Always correctly remove the device according to the rules described below, to ensure that none of your data is lost.

► Tap the symbol for safe removal of the hardware.
► Select the device you wish to shut down and remove.
► Tap *OK*.
↳ Wait for the dialog box which tells you that it is now safe to remove the device.

Headphones port

You can connect either headphones or external speakers to your Tablet PC via the headphone port.

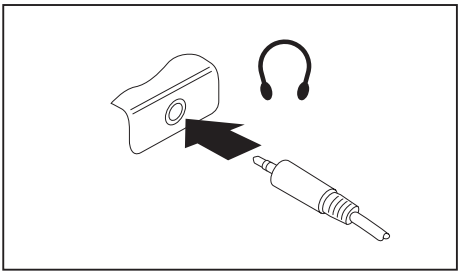

- ► Connect the audio cable to the external device.
- ► Connect the audio cable to the headphone port of the Tablet PC.
- ↳ The internal speakers are disabled.

i

If you buy a cable from a retailer, please note the following information:

The headphone port on your Tablet PC is a "3.5 mm / 1/8" jack socket".

If you want to connect headphones or speakers you will need a "3.5 mm / 1/8" jack plug".

Settings in BIOS Setup Utility

i

To navigate more easily in the *BIOS Setup Utility*, you can use an external USB keyboard.

The *BIOS Setup Utility* allows you to set the system functions and the hardware configuration for the Tablet PC.

When the Tablet PC is delivered, the default settings are effective. You can change these settings in the menus of the *BIOS Setup Utility*. Any changes you make take effect as soon as you save and exit the *BIOS Setup Utility*.

The *BIOS Setup Utility* program contains the following menus:

About	Displays information relating to the BIOS, processor and Tablet PC
System	Advanced system settings
Advanced	Configuration of various hardware components, such as mouse, keyboard, processor
Security	Password settings and security functions
Boot	Configuration of the start-up sequence
Exit	Exits the *BIOS Setup Utility*

Starting the BIOS Setup Utility

► Keep the "Lock screen orientation" tablet button pressed and switch the Tablet PC on.

► If a password has been assigned, enter the password and press the Enter key.

i

If you have forgotten the password, contact your system administrator or contact our customer service center.

The *BIOS Setup Utility* starts.

BIOS Setup Utility operation

i

Press the F1 key to display help about operation of the *BIOS Setup Utility*. The description of the individual settings is shown in the right-hand window of the *BIOS Setup Utility*.

With the F9 key you can load the default settings of the *BIOS Setup Utility*.

- ► Use the cursor keys ← or → to select the menu you wish to access to make changes.
- ↳ The menu is displayed on the screen.
- ► Select the option you want to change with the cursor keys ↑ or ↓.
- ► Press the "Enter" key.
- ► Press the ESC key to exit the selected menu.
- ► For future reference, make a note of the changes you have made.

Exiting BIOS Setup Utility

You need to select the desired option in the *Exit* menu and activate it by pressing the Enter key:

Exit Saving Changes - save changes and exit BIOS Setup Utility

► To save the current menu settings and exit the *BIOS Setup Utility*, select *Exit Saving Changes* and *Yes*.

↳ The Tablet PC is rebooted and the new settings come into effect.

Exit Discarding Changes - Reject changes and exit BIOS Setup Utility

► To discard the changes, select *Exit Discarding Changes* and *Yes*.

↳ The settings which were valid when *BIOS Setup Utility* was called remain effective. The *BIOS Setup Utility* ends and the Tablet PC is rebooted.

Load Setup Defaults – load default values

► To copy the standard entries for all menus of the *BIOS Setup Utility*, choose *Load Setup Defaults* and *Yes*.

Discard Changes - Discard Changes without exiting BIOS Setup Utility

► To discard the changes you have made, select *Discard Changes* and *Yes*.

↳ The settings in place when *BIOS Setup Utility* was called remain effective. You can now make additional settings in the *BIOS Setup Utility*.

► If you want to exit the *BIOS Setup Utility* with these settings, select *Exit Saving Changes* and *Yes*.

Save Changes - save changes without exiting the BIOS Setup Utility

► To save the changes, select *Save Changes* and *Yes*.

↳ The changes are saved. You can now make additional settings in the BIOS Setup Utility.

► If you want to exit BIOS Setup Utility with these settings, choose *Exit Saving Changes* and *Yes*.

Save changes and power off

► To save the changes and switch off your device, select *Save Changes and Power Off* and *Yes*.

↳ The changes are saved. Your device is shut down.

Troubleshooting and tips

If a fault occurs, try to correct it as described. If you are unable to correct the problem, proceed as follows:

► Make a note of the steps and the circumstances that led to the fault. Also make a note of any error messages displayed.

► Switch the notebook off.

► Please contact the Hotline/Service Desk.

i

You can contact Fujitsu Service and Support in the following ways:

- Toll free number: 1-800-Fujitsu (1-800-838-5487)
- Website: "http://solutions.us.fujitsu.com/www/content/support/contact/index.php"

Please have the following information ready when you call:

- The model name and serial number of the notebook. The serial number is located on a sticker on the underside of the notebook.
- Notes of any messages that appear on the screen and information on acoustic signals.
- Any changes you have made to the hardware or software since receiving the notebook.
- Any changes you have made to the *BIOS Setup* settings since receiving the notebook.
- Your system configuration and all peripheral devices connected to your system.
- Your sales contract.

Our notebooks have been designed primarily with mobile applications in mind. This means that considerable effort has been made to optimize components and equipment in terms of weight, space and energy requirements. Depending on the particular configuration you have purchased, it is possible that functionality may be slightly reduced compared to a desktop PC if you are running processor-intensive gaming software, e.g. games with intensive 3D graphics. Updating your hardware with drivers which have not been approved by Fujitsu may result in performance losses, data losses or malfunction of the equipment. A list of approved drivers and current BIOS versions can be downloaded from: "http://solutions.us.fujitsu.com"

Help if problems occur

Should you encounter a problem with your computer that you cannot resolve yourself:

► Note the ID number of your device. The ID number is found on the type rating plate on the back or underside of the casing.

► For further clarification of the problem, contact the Fujitsu Service Desk. When you do this, please have ready the ID number and serial number of your system.

Recovering your Factory Image

In the event you need to restore your original Factory Image refer to the steps in "Appendix: Miscellaneous Information".

The Tablet PC's date or time is incorrect

Cause	Troubleshooting
Time and date are wrongly set.	► With the *BIOS-Setup-Utility*, you can set the date and time in the *Main* menu.
Date and time are still set incorrectly after switching on the Tablet PC.	► Please contact your sales outlet or our hotline/service desk.

Battery indicator does not illuminate

Cause	Troubleshooting
The battery is discharged.	► Charge the battery. **or** ► Connect the Tablet PC to a power outlet using the AC adapter.

The Tablet PC's touchscreen remains dark

Cause	Troubleshooting
Touchscreen is switched off.	► Press a key (external keyboard) or tap on the touchscreen.
External monitor or television set connected.	► Check whether the graphics driver settings are correct or whether an external monitor has been detected in "Intel Graphics Media Accelerator Driver for mobile."

The display on the Tablet PC's touchscreen is difficult to read.

Cause	Troubleshooting
Reflected glare	► Move the Tablet PC into a different position. ► Increase the brightness of the screen.

The external monitor remains blank

Cause	Troubleshooting
Monitor is switched off.	► Switch the external monitor on.
Energy saving has been activated (monitor is blank).	► Press a key (external keyboard) or tap on the touchscreen.
Brightness is set to dark.	► Adjust the brightness of the monitor.
Screen output is set to the Tablet PC touchscreen.	► Check whether the graphics driver settings are correct or whether an external monitor has been detected in "Intel Graphics Media Accelerator Driver for mobile."
The external monitor's AC cable or data cable is not connected properly.	► Switch off the Tablet PC and the external monitor. ► Check whether the AC cable is plugged properly into the external monitor and into the power outlet. ► Check that the data cable is properly connected to the Tablet PC and the external monitor (if it is plugged in with a connector). ► Switch on the external monitor and the Tablet PC.

The external monitor is blank or the image is unstable

Cause	Troubleshooting
The wrong external monitor has been selected or the wrong screen resolution has been set for the application program.	► Terminate the application program in Windows. If the error persists after terminating the program, use the key combination for switching the screen output in order to switch to the touchscreen of the Tablet PC. Change the following setting: ► Set the screen resolution: Set the screen resolution as described in the documentation for your operating system. ► Select monitor: Select monitor 1 or 2 as described in the documentation for your operating system.

The cursor does not correctly follow the stylus movements

Cause	Troubleshooting
Stylus incorrectly calibrated.	► Calibrate the stylus as described in chapters "Adjusting the stylus", Page 32 and "Calibrating the stylus", Page 33.

Stylus input not working

Cause	Troubleshooting
Incorrect driver installed.	► If your device is one which can only be operated using the stylus, install the driver for the standard model. **or** ► If your device is one which can be operated using the stylus and by finger, install the driver for the "Dual Digitizer" model.

The Tablet PC does not start after switch on

Cause	Troubleshooting
The battery is discharged.	► Charge the battery. **or** ► Connect the AC adapter to the Tablet PC.
The AC adapter is not properly connected.	► Check whether the AC adapter is properly connected to the Tablet PC. ► Switch the Tablet PC on.

The Tablet PC stops working

Cause	Troubleshooting
The Tablet PC is in energy saving mode.	► End energy saving mode.
An application program has caused the malfunction.	► Close the application program or restart the Tablet PC (by restarting the operating system or switching the device off and back on again).
The battery is discharged.	► Charge the battery. **or** ► Connect the AC adapter to the Tablet PC.

The printer does not print

Cause	Troubleshooting
The printer is not switched on.	► Make sure that the printer is switched on and ready for operation (refer to the documentation supplied with the printer).
The printer is not connected correctly.	► Check that the data cable between the Tablet PC and the printer is properly connected.
The printer driver is faulty or not correctly installed, or it is the wrong printer driver.	► Check that the data cable between the Tablet PC and the printer is properly connected. ► Check whether the correct printer driver is loaded (refer to the printer documentation).

The wireless connection to a network does not work

Cause	Troubleshooting
The wireless component is switched off.	► Switch the wireless component on (see "Switching the wireless components on and off", Page 40).
The wireless component is switched on. Despite this, the wireless connection to a network does not work.	► Check whether the wireless connection is enabled by the software. ► Further information on using the wireless component can be found in the help files.

The battery discharges too quickly

Cause	Troubleshooting
The battery is either too hot or too cold. In this case the battery indicator flashes.	► Bring the Tablet PC up/down to a normal operating temperature again. ► If the operating time of the battery life is extremely short, the battery is probably too old. Replace the battery if necessary.
You may have an application running that consumes a great deal of power due to frequent accessing of the hard disk or optical drive.	► Use the AC adapter whenever possible.
The maximum brightness may have been set for the screen.	► Reduce the brightness of the screen to lower energy consumption: You will find the setting under *Control Panel – Hardware and Sounds – Windows Mobility Center*.

Smart Card reader is not recognized

Cause	Troubleshooting
Chip card inserted incorrectly.	► Make sure you have inserted your Smart Card into the Smart Card reader with the chip facing upwards. ► Check whether the Smart Card you are using is supported. Your Smart Card must comply with the ISO standard 7816-1, -2, -3 and -4.

Acoustic warning

Cause	Troubleshooting
A beep sounds every few seconds. The battery is almost flat.	► Charge the battery.

Error messages on the screen

This section describes the error messages generated by the BIOS Setup. Error messages displayed by the operating system or programs are described in the documentation for these programs.

i

If the error message appears repeatedly despite troubleshooting measures, contact the place of purchase or our customer service center.

Error message/cause	Troubleshooting
CMOS Battery Bad If the error message occurs repeatedly, the buffer battery in the Tablet PC is flat.	► Contact your sales outlet or our customer service center.
System CMOS checksum bad - Default configuration used The system configuration information is incorrect.	► Switch the Tablet PC off. ► Switch the Tablet PC on. ► In the *BIOS Setup*, select the *Exit* menu. ► Select the entry *Load Setup Defaults*. ► Select *OK* and press the Enter key.
Extended memory failed at offset: xxxx Failing Bits: zzzz zzzz When testing the extended memory. an error has resulted at the address xxxx.	► Contact your sales outlet or our customer service center.
Failure Fixed Disk n The settings of the hard disk drive are incorrect.	► Start the *BIOS Setup* (*Primary Master* submenu) and select the correct settings.
Keyboard controller error	► Switch your Tablet PC off with the ON/OFF button. ► Wait 3 - 5 seconds and switch the Tablet PC on again.
Keyboard error	If you use an external keyboard: ► Check the connection and reboot the Tablet PC.
nn Stuck key	► Make sure that no key is pressed.
Operating system not found	► Check in the *BIOS Setup* whether your hard disk has been set correctly. ► Make sure that the operating system is installed on the corresponding drive.
Press <F1> to resume, <F2> to SETUP This error message appears if an error occurs during the self-test before starting the operating system.	► Press the [Alt] tablet button to boot the operating system
Real time clock error	► Contact your sales outlet or our customer service center.
nnnnK Shadow RAM failed at offset: xxxx Failing Bits: zzzz	► Contact your sales outlet or our customer service center.
System battery is dead - Replace and run SETUP	► Contact your sales outlet or our customer service center.
System cache error - Cache disabled	► Contact your sales outlet or our customer service center.
System timer error	► Contact your sales outlet or our customer service center.

Technical data

Tablet PC

General	
Processor	Core i5 or core i7 (dependent on configuration)
Main memory (SO DIMM)	• Core i5: 4 GB • Core i7: 8 GB
Electrical data	
Safety regulations complied with	CE
Protection class	II
Maximum power consumption (when the Tablet PC is switched on, connected to the keyboard cover and the battery is charged):	65 W
Touchscreen	
Size	12.5" Full HD Wide View IPS
Screen resolution	1920 x 1080 / 16 million colors
Pixel class	II
Brightness control	12 levels
Technology	Wide-View High-Bright Display with LED background lighting
Digitizer and glass panel	Dual digitizer with Glare touch screen
Cameras	• Front: HD camera • Back: 8 megapixels, autofocus, mobile light
Graphics card	
Chip	Intel® HD Graphics 4400
Maximum resolution of external display:	1920 x 1080
Dimensions	
Width x Depth x Height	Standard Shell tablet only: 12.19 x 7.85 x 0.47 inches (309.6 x 199.3 x 11.9 mm) Standard Shell tablet w/keyboard cover: 12.19 x 7.85 x 0.79 inches (309.6 x 199.3 x 20 mm) Standard Shell tablet w/keyboard docking station: 12.19 x 7.85 x 1.22 inches (309.6 x 199.3 x 31.1 mm) Smart Card Shell tablet only: 12.19 x 7.85 x 0.74 inches (309.6 x 199.3 x 18.8 mm) Smart Card Shell tablet w/keyboard cover: 12.19 x 7.85 x 1.09 inches (309.6 x 199.3 x 27.8 mm) Smart Card Shell tablet w/keyboard docking station: 12.19 x 7.85 x 1.31 inches (309.6 x 199.3 x 33.3 mm)

Weight depending on configuration	Standard Shell tablet only: 2.16 lbs (.98 kg) Standard Shell tablet w/keyboard cover: 3.68 lbs (1.67 kg) Standard Shell tablet w/keyboard docking station: 4.72 lbs (2.14 kgs) Smart Card Shell tablet only: 2.38 lbs (1.08 kgs) Smart Card Shell tablet w/keyboard cover: 3.90 lbs (1.77 kgs) Smart Card Shell tablet w/keyboard docking station: 4.94 lbs (2.24 kgs)
Input devices	
Tablet buttons	3 keys
Stylus	Active stylus with one press-button
Slots	
Storage card slot	1 x Micro SD
SIM card slot	1 x Micro SIM
Ports	
Headphones port	3.5 mm / 1/8" stereo mini jack
Docking port	1 x
USB (Universal Serial Bus)	1 x USB 3.0, 1 x micro USB 2.0
Ambient conditions	
Environment class DIN IEC 721	7K1
Mechanism class DIN IEC 721	7M2
Operating temperature	5 °C .... 35 °C / 41 °F .... 95 °F
Transport temperature (2K2)	–15 °C .... 60 °C / 5 °F .... 140 °F

WLAN specifications

Type of network	Intel® Dual Band Wireless 7265NGW (Stone Peak – 11a/b/g/n/11ac), Wi-Fi based*
Transfer rate	(Automatic switching) IEEE802.11 a and g: 54 Mbps max. data rate; IEEE802.11n: 300 Mbps max. data rate
Active frequency	• 802.11n: 2.4 GHz or 5 GHz • 802.11b/g: 2400~2473 MHz • 802.11a: 4900~5850 MHz
Typical operating distances**	• 802.11a: 40 f . (12 m8 @ 54 Mbp02 300 f . (91 m8 @ 6 Mbp0 • 802.11ac: 40 f . (12 m8 @ 54 Mbp02 300 f .(91 m8 @ 6 Mbp0 • 802.11b: 100 f . (30 m8 @ 11 Mbp02 300 f . (91 m8 @ 1 Mbp0 • 802.11g: 100 f . (30 m8 @ 54 Mbp02 300 f . (91 m8 @ 1 Mbp0 • 802.11n: E0 .1atn: doubln t4n opnrat.ng d.0 ancn of 802.11g and 802.11a in t4n.r re0GnH .zn freornnc.n0
Number of channels	• 802.11a: 8 indnGnndnnt c4anne50 • 802.11b/g: 11 c4anne50• 3 non-ovnrlapG.ng c4anne50 • 802.11n: C4anne5 bond.ng takn0 tbo of 4n non ovnrlapG.ng 20MHz c4anne50 and Hombine0 i into one 40MHz c4anne5. l i0 ac ral5/ 12 non-ovnrlapG.ng c4anne50 w. 4 H4anne5 bond.ng and 24 w. 4ou . A50o i i0 1 non ovnrlapG.ng c4anne5 in 2.4GHz w4nn 4anne5 bond.ng i0 u0n.
Security	EncryG .on t/Gn0: comGat.bln w. 4 Wg~• T73~• Mga999• W~M 1.0 and W~M 2.0 EncryG .on kn/• lnngt40 srGGortn:: 64 bi 0 and 128 bi 0
Maximum recommended number of computers to be connected over wireless LAN (during ad hoc connection)	10 units or less****

* "Wi-Fi based" indicates that the interconnectivity test of the organization which guarantees the interconnectivity of wireless LANs (Wi-Fi Alliance) was passed.
** The operating distances given above increase or decrease depending on factors such as the number of walls, reflecting material or interference by external RF sources.
*** Network key encryption (WEP) occurs with the number of bits given above, after deduction of the fixed length of 24 bits the user may however also set 40 or 104 bits.
**** Depending on the particular practical application, the number of computers which can be networked is reduced if necessary.

Rechargeable battery

	3-cell lithium polymer battery 4250 mAh
Rated voltage	10.8 V
Rated capacity	46 Wh

AC adapter (65 W)

Rated voltage	19 V
Max. rated current	3.16 A

An additional AC adapter or AC cable can be ordered at any time.

Performance docking cradle (optional)

Electrical data	
Safety regulations complied with	CE
Protection class	II
Dimensions	
Width x Depth x Height	9.89 x 4.24 x 2.48 in. / 251 x 108 x 63.1 mm
Weight	approx. 0.88 lbs / 400 g
Ports	
USB (Universal Serial Bus)	4 x USB 3.0
Docking port	40-pin
External monitor port (VGA)	1 x, max. resolution supported 1920 x 1080 (Full HD)
LAN port	1 x
HDMI port	1 x, max. resolution supported 1920 x 1080 (Full HD)
Ambient conditions	
Environment class DIN IEC 721	7K1
Mechanism class DIN IEC 721	7M2
Operating temperature	5 °C .... 35 °C / 41 °F .... 95 °F
Temperature in transit	–15 °C .... 60 °C / 5 °F .... 140 °F

Keyboard cover (optional)

Electrical data	
Safety regulations complied with	CE
Protection class	II
Dimensions	
Width x Depth x Height	12.19 x 8.37 x 0.78 in. / 309.6 x 212.7 x 20.0 mm
Weight	approx. 1.52 lbs. / 690 g
Ports	
Docking port	40-pin
Ambient conditions	
Environment class DIN IEC 721	7K1
Mechanism class DIN IEC 721	7M2
Operating temperature	5 °C .... 35 °C / 41 °F .... 95 °F
Temperature in transit	–15 °C .... 60 °C / 5 °F .... 140 °F

Keyboard docking station (optional)

i

The battery of the keyboard docking station is not user-replaceable.

Electrical data	
Safety regulations complied with	CE
Protection class	II
Battery	46 Wh
Dimensions	
Width x Depth x Height	12.189 x 8.46 x 1.78 in. / 309.6 x 214.8 x 29.9 mm
Weight	approx. 2.56 lbs. / 1.16 kg
Ports	
Docking port	16-pin
USB (Universal Serial Bus)	2 x USB 3.0
External monitor port (VGA)	1 x
LAN port	1 x
HDMI port	1 x
Ambient conditions	
Environment class DIN IEC 721	7K1
Mechanism class DIN IEC 721	7M2
Operating temperature	5 °C .... 35 °C / 41 °F .... 95 °F
Temperature in transit	–15 °C .... 60 °C / 5 °F .... 140 °F

VESA mounting attachment (optional)

Dimensions	
Width x Depth x Height	approx. 218 mm x 103.5 mm x 13.5 mm / 8.58 in x 4.07 in x 0.53 in
Weight	approx. 120 g / 0.26 lbs

Hand strap (optional)

Dimensions	
Width x Depth x Height	approx. 480 mm x 77 mm x 13 mm / 18.89 in x 3.03 in x 0.51 in
Weight	approx. 30 g / 0.066 lbs

Shoulder strap (optional)

Dimensions	
Length x Depth x Height	approx. 1270 mm x 25 mm x 5 mm / 50 in x 0.98 in x 0,19 in
Weight	approx. 25 g / 0.055 lbs

Micro USB adapters (optional)

Adapter	Length	Max. resolution
Micro USB to USB adapter	6 inches	N/A
Micro USB to HDMI adapter	6 inches	1920 x 1080
Micro USB to VGA adapter	6 inches	1920 x 1080
Micro USB to Display Port adapter	6 inches	1920 x 1080
Micro USB to LAN adapter	6 inches	N/A

Manufacturer’s notes

Disposal and recycling

You can find information on this subject on your notebook or on our website ("http://solutions.us.fujitsu.com/www/content/products/trade-in_program/").

Recycling your battery

Over time, the batteries that run your mobile computer will begin to hold a charge for a shorter amount of time; this is a natural occurrence for all batteries. When this occurs, you may want to replace the battery with a fresh one*. If you replace it, it is important that you dispose of the old battery properly because batteries contain materials that could cause environmental damage if disposed of improperly.

Fujitsu is very concerned with environmental protection, and has enlisted the services of the Rechargeable Battery Recycling Corporation (RBRC)**, a nonprofit public service organization dedicated to protecting our environment by recycling old batteries at no cost to you.

RBRC has drop-off points at tens of thousands of locations throughout the United States and Canada. To find the location nearest you, go to "www.RBRC.org" or call 1-800-822-8837.

If there are no convenient RBRC locations near you, you can also go to the EIA Consumer Education Initiative website "http://EIAE.org/ " and search for a convenient disposal location.

i

Remember – protecting the environment is a cooperative effort, and you should make every effort to protect it for current and future generations.

* To order a new battery for your Fujitsu mobile computer, go to the Fujitsu shopping site at "www.shopfujitsu.com" in the US or "www.fujitsu.ca/products/notebooks" in Canada.

** RBRC is an independent third party to which Fujitsu provides funding for battery recycling; RBRC is in no way affiliated with Fujitsu.

DOC (Industry CANADA) Notices

Radios and Television

This Class B digital apparatus meets all requirements of Canadian Interference-Causing Equipment Regulations.

CET appareil numérique de la class B respecte toutes les exigence du Réglement sur le matérial brouilleur du Canada.

UL Notice

IMPORTANT SAFETY INSTRUCTIONS

This unit requires an AC adapter to operate. Only use UL Listed I.T.E. adapters with an output rating of 19 VDC, with a minimum current of 3.42A (65W). The correct output rating is indicated on the AC adapter label. Refer to the illustration below for the correct AC Adapter output polarity:

When using your notebook equipment, basic safety precautions should always be followed to reduce the risk of fire, electric shock and injury to persons, including the following:

- Do not use this product near water for example, near a bathtub, washbowl, kitchen sink or laundry tub, in a wet basement or near a swimming pool.
- Use only the power cord and batteries indicated in this manual. Do not dispose of batteries in a fire. They may explode. Check with local codes for possible special disposal instructions.

SAVE THESE INSTRUCTIONS

For Authorized Repair Technicians Only

CAUTION:

For continued protection against risk of fire, replace only with the same type and rating fuse.

WARNING:

Danger of explosion if Lithium (CMOS) battery is incorrectly replaced. Replace only with the same or equivalent type recommended by the manufacturer.

Dispose of used batteries according to the manufacturer's instruction.

ENERGY STAR Compliance

Your Fujitsu system is an ENERGY STAR qualified mobile PC. By choosing a computer with the latest energy-saving technology, you’re helping to preserve our environment for future generations. ENERGY STAR is a joint program of the U.S. Environmental Protection Agency, U.S. Department of Energy, Natural Resources Canada, and other governments around the world helping us save money while protecting the environment through energy efficient products and practices. With energy costs and global warming top-of-mind for consumers, Fujitsu is committed to offering solutions that help consumers conserve energy and improve the quality of our environment.

Sleep Mode:

You will notice that your computer is initially set so that the display turns off after 15 minutes of user inactivity, and the computer goes into Sleep mode after 20 minutes of user inactivity. When going into Sleep mode, the computer also reduces the speed of any active Ethernet network links. To “wake” the computer from Sleep mode, press the Suspend/Resume Button.

Energy saving benefits:

Fujitsu ENERGY STAR qualified mobile PCs use about half as much electricity as standard equipment – saving half in utility costs. But more than that, ENERGY STAR also makes a difference for the environment. Did you know that the average house can be responsible for twice the greenhouse gas emissions as the average car? That’s because every time you flip on a light switch, run your dishwasher, or turn on your PC, you use energy, which means more greenhouse gas emissions from power plants. So the more energy we can save through energy efficiency, the more we help to reduce greenhouse gases and the risks of global warming.

To learn more about the important ENERGY STAR program, visit:"www.energystar.gov".

To read about how Fujitsu is supporting Sustainable Management along with several other environmental activities, visit the Fujitsu Corporate Citizenship page at: "http://www.computers.us.fujitsu.com/www/content/aboutus/environmental/environment.php".

Declarations of Conformity

This device complies with Part 15 of the FCC rules. Operations are subject to the following two conditions: (1) This device may not cause harmful interference, (2) This device must accept any interference received, including interference that may cause undesired operation.

FCC and IC Regulatory Information

Please note the following regulatory information related to the wireless LAN device.

Regulatory Notes and Statements

Wireless LAN, Health and Authorization for use

Radio frequency electromagnetic energy is emitted from Wireless LAN devices. The energy levels of these emissions, however, are far much less than the electromagnetic energy emissions from wireless devices such as mobile phones. Wireless LAN devices are safe for use by consumers because they operate within the guidelines found in radio frequency safety standards and recommendations. The use of Wireless LAN devices may be restricted in some situations or environments, such as:

- On board an airplane, or
- In an explosive environment, or
- In situations where the interference risk to other devices or services is perceived or identified as harmful.

In cases in which the policy regarding use of Wireless LAN devices in specific environments is not clear (e.g., airports, hospitals, chemical/oil/gas industrial plants, private buildings), obtain authorization to use these devices prior to operating the equipment.

Regulatory Information/Disclaimers

Installation and use of this Wireless LAN device must be in strict accordance with the instructions included in the user documentation provided with the product. Any changes or modifications made to this device that are not expressly approved by the manufacturer may void the user's authority to operate the equipment. The manufacturer is not responsible for any radio or television interference caused by unauthorized modification of this device, or the substitution or attachment of connecting cables and equipment other than those specified by the manufacturer. It is the responsibility of the user to correct any interference caused by such unauthorized modification, substitution or attachment. The manufacturer and its authorized resellers or distributors will assume no liability for any damage or violation of government regulations arising from failure to comply with these guidelines.

This device must not be co-located or operated in conjunction with any other antenna or transmitter.

For IEEE 802.11a Wireless LAN: For operation within 5.15~5.25 GHz frequency range, it is restricted to indoor environments, and the antenna of this device must be integral.

Federal Communications Commission and Industry Canada statement:

This device complies with Part 15 of FCC Rules and Industry Canada license exempt RSS standard(s).

Operation is subject to the following two conditions: (1) This device may not cause interference, and, (2) This device must accept any interference, including interference that may cause undesired operation of this device.

Déclaration d'Industrie Canada

Cet appareil est conforme à la Section 15 des Règles de la FC C et à la (aux) norme(s) RSS concernant les appareils exempt s de licence par Industrie Canada. Son fonctionnement est soumis aux deux condition s suivantes : (1) cet appareil ne doit pas causer d'interférence nuisib le; (2) cet appareil doit accepter toutes les interférences reçues, y compris celles pouvan t causer un mauvais fonctionnement de l'appareil.

FCC Interference Statement

This equipment has been tested and found to comply with the limits for a Class B digital device, pursuant to Part 15 of the FCC Rules. These limits are designed to provide reasonable protection against harmful interference in a residential installation. This equipment generates, uses, and can radiate radio frequency energy. If not installed and used in accordance with the instructions, it may cause harmful interference to radio communications. However, there is no guarantee that interference will not occur in a particular installation.

If this equipment does cause harmful interference to radio or television reception, which can be determined by turning the equipment off and on, the user is encouraged to try and correct the interference by one or more of the following measures:

1. Reorient or relocate the receiving antenna.
2. Increase the distance between the equipment and the receiver.
3. Connect the equipment to an outlet on a circuit different from the one the receiver is connected to.
4. Consult the dealer or an experienced radio/TV technician for help.

FCC Radio Frequency Exposure statement

The available scientific evidence does not show that any health problems are associated with using low power wireless devices. There is no proof, however, that these low power wireless devices are absolutely safe. Low power wireless devices emit low levels of radio frequency energy (RF) in the microwave range while being used. Whereas high levels of RF can produce health effects (by heating tissue), exposure to low-level RF that does not produce heating effects causes no known adverse health effects. Many studies of low-level RF exposure have not found any biological effects. Some studies have suggested that some biological effects might occur, but such findings have not been confirmed by additional research.

The wireless LAN radio device has been tested and found to comply with FCC radiation exposure limits set forth for an uncontrolled equipment and meets the FCC radio frequency (RF) Exposure Guidelines in Supplement C to OET65.

The exposure standard for wireless devices employs a unit of measurement known as the Specific Absorption Rate, or SAR. The SAR limit set by the FCC is 1.6W/kg, and 1.6W/kg by Industry Canada.

This device is compliant with SAR for general population /uncontrolled exposure limits in ANSI/IEEE C95.1-1992 and Canada RSS 102, and had been tested in accordance with the measurement methods and procedures specified in OET Bulletin 65 Supplement C, and Canada RSS 102. This device has been tested, and meets the FCC, IC RF exposure guidelines when tested with the device operating conditions.

Déclaration de la FCC/d'Industrie Canada sur l'exposition aux radiofréquences

La norme régissant l'exposition des appareils sans fil aux radiofréquences emploie une unité de mesure dénommée Taux d'absorption spécifique, ou TAS. La FCC et Industrie Canada ont défini la même limite de TAS : 1,6 W/kg. Cet appareil est conforme au TAS pour les limites d'exposition générales de la population/non contrôlées définies par les règles C95.1-1992 de l'ANSI/IEEE et RSS 102 d'Industrie Canada ; il a été testé en conformité avec les méthodes et procédures de mesure spécifiées dans le supplément C du bulletin 65 de l'OET (Office d'ingénierie et de technologie) et la règle RSS 102 d'Industrie Canada. Cet appareil a été testé selon les directives de la FCC et d'IC concernant l'exposition aux radiofréquences et s'est révélé conforme à ces dernières lorsqu'il a été testé en contact direct avec le corps.

Export restrictions

This product or software contains encryption code which may not be exported or transferred from the US or Canada without an approved US Department of Commerce export license. This device complies with Part 15 of FCC Rules., as well as ICES 003 B / NMB 003 B. Operation is subject to the following two conditions: (1) this device may not cause harmful interference, and (2) this device must accept any interference received, including interference that may cause undesirable operation. Modifications not expressly authorized by Fujitsu America, Inc. may invalidate the user’s right to operate this equipment.

Canadian Notice

The device for the 5150 - 5250 MHz band is only for indoor usage to reduce the potential for harmful interference to co-channel mobile satellite systems.

The maximum antenna gain of 6 dBi permitted (for devices in the 5250 - 5350 MHz, 5470 - 5725 MHz and 5725 - 5825 MHz bands) to comply with the e.i.r.p. limit as stated in A9.2 of RSS210.

In addition, users are cautioned to take note that high power radars are allocated as primary users (meaning they have priority) of 5250 - 5350 MHz and 5650 - 5850 MHz and these radars could cause interference and/or damage to LE-LAN devices.

Avis pour le Canada

Le matériel destiné à un usage sur la bande 5 150 - 5 250 MHz doit être utilisé uniquement à l’intérieur afin de réduire les risques de brouillage nuisible causé aux systèmes mobiles par satellite fonctionnant sur un même canal.

Un gain d’antenne de 6 dBi est autorisé (pour le matériel utilisant les bandes 5 250 - 5 350 MHz, 5 470 - 5 725 MHz et 5 725 - 5 825 MHz), conformément à la limite p.i.r.e. maximale permise selon l’annexe A9.2 afférent aux périphériques RSS210.

En outre, les utilisateurs doivent prendre garde au fait que les radars de grande puissance sont considérés comme des utilisateurs principaux (ce qui signifie qu’ils sont prioritaires) des bandes 5 250 - 5 350 MHz et 5 650 - 5 850 MHz et qu’ils pourraient causer des interférences et/ou des dommages aux appareils de réseau exempts de licence.

Appendix

Before Using the Optional Wireless LAN

This manual describes the procedures required to properly set up and configure the optional integrated Wireless LAN Mini-PCI device (referred to as "WLAN device" in the rest of the manual). Before using the WLAN device, read this manual carefully to ensure its correct operation. Keep this manual in a safe place for future reference.

Wireless LAN Devices Covered by this Document

This document is applicable to systems containing the following device:

- Intel® Dual Band Wireless-N 7260

Characteristics of the WLAN Device

- The WLAN devices are PCI Express Mini cards attached to the main board of the mobile computer.
- The WLAN devices operate in license-free RF bands, eliminating the need to procure an FCC operating license. The WLAN operates in the 2.4GHz Industrial, Scientific, and Medical (ISM) RF band and the lower, middle, and upper bands of the 5GHz Unlicensed National Information Infrastructure (UNII) bands.
- The WLAN devices are capable of four operating modes, IEEE802.11a, IEEE802.11b, IEEE802.11g, and IEEE802.11n.
- The WLAN device is Wi-Fi certified and operates (as applicable) at the maximum data rate of 450 Mbps in IEEE802.11n mode (300 Mbps in this configuration); 54 Mbps in IEEE802.11g mode; and 11 Mbps in IEEE802.11b mode.
- The WLAN devices support the following encryption methods - WEP, TKIP, CKIP, and AES encryption.
- The Wireless LAN devices are compliant with the following standards: WPA, WPA2, CCX1.0, CCX2.0, CCX3.0, and CCX4.0.

Wireless LAN Modes Using this Device

Ad Hoc Mode

"Ad Hoc Mode" refers to a wireless network architecture where wireless network connectivity between multiple computers is established without a central wireless network device, typically known as Access Point(s). Connectivity is accomplished using only client devices in a peer-to-peer fashion. That is why Ad Hoc networks are also known as peer-to-peer networks. Ad Hoc networks are an easy and inexpensive method for establishing network connectivity between multiple computers. Ad Hoc mode requires that the SSID, network authentication, and encryption key settings are identically configured on all computers in the Ad Hoc network.

Access Point (Infrastructure) Mode

Infrastructure mode refers to a wireless network architecture in which devices communicate with wireless or wired network devices by communicating through an Access Point. In infrastructure mode, wireless devices can communicate with each other or with a wired network. Corporate wireless networks operate in infrastructure mode because they require access to the WLAN in order to access services, devices, and computers (e.g., file servers, printers, databases).

* = An optional hub for a wired LAN may be required depending upon the type of access point used.

** = ADSL modem, cable modem, or similar

How to Handle This Device

The WLAN device is an optional device that may come pre-installed in your mobile computer. Under normal circumstances, it should not be necessary for you to remove or re-install it. The Operating System that your mobile computer comes with has been pre-configured to support the WLAN device.

- Integrated Intel Centrino wireless LAN devices support IEEE802.11a, IEEE802.11b, IEEE802.11g, and IEEE802.11n.
- The WLAN device operates in the 2.4 GHz ISM band and the 5 GHz lower, middle, and upper UNII bands.
- Microwave ovens may interfere with the operation of WLAN devices since they operate in the same 2.4 GHz frequency range as IEEE802.11b/g/n devices. Interference by microwaves does not occur with IEEE802.11a radio which operates in the 5 GHz RF band.
- Wireless devices that transmit in the 2.4 GHz range may interfere with operation of WLAN devices in IEEE802.11b/g/n modes. Symptoms of interference include reduced throughput, intermittent disconnects, and many frame errors. It is HIGHLY recommended that these interfering devices be powered off to ensure proper operation of the WLAN device.

Deactivating/Disconnecting the WLAN Device

Disconnecting the WLAN device may be desired in certain circumstances (to extend battery life) or where certain environments require it (i.e. hospitals, clinics, airplanes, etc.). The WLAN device can be disconnected in Windows using the WLAN icon in the system tray (Note that disconnecting via the icon in the system tray does not turn off the radio; it continues to transmit and receive even though it's not connected.)

The radio components are switched on and off using the appropriate functions of the operating system.

► To switch radio components on and off individually, select *Settings – Change PC settings – Wireless – Wireless devices – Off*.

Configuring the Wireless LAN

The optional WLAN device can be configured to establish wireless network connectivity using the software that is built into Windows. Support for most industry standard security solutions is contained in this software.

Pre-defined parameters will be required for this procedure. Please consult with your network administrator for these parameters:

Connection to the network

After you have configured your computer, you can connect to an active network by performing the following steps:

1. Click on the *WLAN* icon in the system tray.
2. Select *Connect to a network*.
3. Select a network from the list that appears, and click the *Connect* button.

FCC and IC Regulatory Information

Please note the following regulatory information related to the wireless LAN device.

Regulatory Notes and Statements

Wireless LAN, Health and Authorization for use

Radio frequency electromagnetic energy is emitted from Wireless LAN devices. The energy levels of these emissions, however, are far much less than the electromagnetic energy emissions from wireless devices such as mobile phones. Wireless LAN devices are safe for use by consumers because they operate within the guidelines found in radio frequency safety standards and recommendations. The use of Wireless LAN devices may be restricted in some situations or environments, such as:

- On board an airplane, or
- In an explosive environment, or
- In situations where the interference risk to other devices or services is perceived or identified as harmful.

In cases in which the policy regarding use of Wireless LAN devices in specific environments is not clear (e.g., airports, hospitals, chemical/oil/gas industrial plants, private buildings), obtain authorization to use these devices prior to operating the equipment.

THE PRODUCT ID LABEL IS LOCATED IN THE BATTERY COMPARTMENT. THE LABEL CAN BE SEEN BY REMOVING THE BATTERY.
L'ÉTIQUETTE D'IDENTIFICATION DU PRODUIT EST SITUÉE DANS LE COMPARTIMENT DE LA BATTERIE. POUR VOIR L'ÉTIQUETTE, RETIREZ LA BATTERIE CONFORMÉMENT.

Regulatory Information/Disclaimers

Installation and use of this Wireless LAN device must be in strict accordance with the instructions included in the user documentation provided with the product. Any changes or modifications made to this device that are not expressly approved by the manufacturer may void the user's authority to operate the equipment. The manufacturer is not responsible for any radio or television interference caused by unauthorized modification of this device, or the substitution or attachment of connecting cables and equipment other than those specified by the manufacturer. It is the responsibility of the user to correct any interference caused by such unauthorized modification, substitution or attachment. The

manufacturer and its authorized resellers or distributors will assume no liability for any damage or violation of government regulations arising from failure to comply with these guidelines.

This device must not be co-located or operated in conjunction with any other antenna or transmitter.

For IEEE 802.11a Wireless LAN: For operation within 5.15~5.25 GHz frequency range, it is restricted to indoor environments, and the antenna of this device must be integral.

Federal Communications Commission and Industry Canada statement:

This device complies with Part 15 of FCC Rules an d Industry Canada license exempt RSS standard(s).
Operation is subject to the following two conditions: (1) This device may not cause interference, and, (2) This device must accept any interference, including interference that may cause undesired operation of this device.

Déclaration d'Industrie Canada

Cet appareil est conforme à la Section 15 des Règles de la FC C et à la (aux) norme(s) RSS concernant les appareils exempt s de licence par Industrie Canada. Son fonctionnement est soumis aux deux condition s suivantes : (1) cet appareil ne doit pas causer d'interférence nuisib le; (2) cet appareil doit accepter toutes les interférences reçues, y compris celles pouvan t causer un mauvais fonctionnement de l'appareil .

FCC Interference Statement

This equipment has been tested and found to comply with the limits for a Class B digital device, pursuant to Part 15 of the FCC Rules. These limits are designed to provide reasonable protection against harmful interference in a residential installation. This equipment generates, uses, and can radiate radio frequency energy. If not installed and used in accordance with the instructions, it may cause harmful interference to radio communications. However, there is no guarantee that interference will not occur in a particular installation.

If this equipment does cause harmful interference to radio or television reception, which can be determined by turning the equipment off and on, the user is encouraged to try and correct the interference by one or more of the following measures:

1. Reorient or relocate the receiving antenna.
2. Increase the distance between the equipment and the receiver.

3. Connect the equipment to an outlet on a circuit different from the one the receiver is connected to.
4. Consult the dealer or an experienced radio/TV technician for help.

FCC Radio Frequency Exposure statement

The available scientific evidence does not show that any health problems are associated with using low power wireless devices. There is no proof, however, that these low power wireless devices are absolutely safe. Low power wireless devices emit low levels of radio frequency energy (RF) in the microwave range while being used. Whereas high levels of RF can produce health effects (by heating tissue), exposure to low-level RF that does not produce heating effects causes no known adverse health effects. Many studies of low-level RF exposure have not found any biological effects. Some studies have suggested that some biological effects might occur, but such findings have not been confirmed by additional research.

The wireless LAN radio device has been tested and found to comply with FCC radiation exposure limits set forth for an uncontrolled equipment and meets the FCC radio frequency (RF) Exposure Guidelines in Supplement C to OET65.

The exposure standard for wireless devices employs a unit of measurement known as the Specific Absorption Rate, or SAR. The SAR limit set by the FCC is 1.6W/kg, and 1.6W/kg by Industry Canada.

This device is compliant with SAR for general population /uncontrolled exposure limits in ANSI/IEEE C95.1-1992 and Canada RSS 102, and had been tested in accordance with the measurement methods and procedures specified in OET Bulletin 65 Supplement C, and Canada RSS 102. This device has been tested, and meets the FCC, IC RF exposure guidelines when tested with the device operating conditions

Déclaration de la FCC/d'Industrie Canada sur l'exposition aux radiofréquences

La norme régissant l'exposition des appareils sans fil aux radiofréquences emploie une unité de mesure dénommée Taux d'absorption spécifique, ou TAS. La FCC et Industrie Canada ont défini la même limite de TAS : 1,6 W/kg.

Cet appareil est conforme au TAS pour les limites d'exposition générales de la population/non contrôlées définies par les règles C95.1-1992 de l'ANSI/IEEE et RSS 102 d'Industrie Canada ; il a été testé en conformité avec les méthodes et procédures de mesure spécifiées dans le supplément C du bulletin 65 de l'OET (Office d'ingénierie et de technologie) et la règle RSS 102 d'Industrie Canada. Cet appareil a été testé selon les directives de la FCC et d'IC concernant l'exposition aux radiofréquences et s'est révélé conforme à ces dernières lorsqu'il a été testé en contact direct avec le corps.

Export restrictions

This product or software contains encryption code which may not be exported or transferred from the US or Canada without an approved US Department of Commerce export license. This device complies with Part 15 of FCC Rules., as well as ICES 003 B / NMB 003 B. Operation is subject to the following two conditions: (1) this device may not cause harmful interference, and (2) this device must accept any interference received, including interference that may cause undesirable operation. Modifications not expressly authorized by Fujitsu America, Inc. may invalidate the user's right to operate this equipment.

Restrictions concernant l'exportation

Ce produit ou logiciel contient du code de chiffrement qui ne peut être exporté ou transféré du Canada ou des États-Unis sans un permis d'exportation du département du commerce de États-Unis. Ce matériel est conforme à la Partie 15 des règlements de la FCC, ainsi qu'à la norme ICES 003 B/NMB 003 B. Son fonctionnement est soumis aux deux conditions suivantes
: (1) cet appareil ne doit pas causer d'interférence nuisible; (2) cet appareil doit accepter toutes les interférences reçues, y compris celles pouvant causer un mauvais fonctionnement de l'appareil. Toute modification n'ayant pas été expressément approuvée par la société Fujitsu America Incorporated peut annuler le droit de l'utilisateur de se servir du matériel.

Canadian Notice

The device for the 5150 - 5250 MHz band is only for indoor usage to reduce the potential for harmful interference to co-channel mobile satellite systems.

The maximum antenna gain of 6 dBi permitted (for devices in the 5250 - 5350 MHz, 5470 - 5725 MHz and 5725 - 5825 MHz bands) to comply with the e.i.r.p. limit as stated in A9.2 of RSS210.

In addition, users are cautioned to take note that high power radars are allocated as primary users (meaning they have priority) of 5250 - 5350 MHz and 5650 - 5850 MHz and these radars could cause interference and/or damage to LE-LAN devices.

Avis pour le Canada

Le matériel destiné à un usage sur la bande 5 150 - 5 250 MHz doit être utilisé uniquement à l'intérieur afin de réduire les risques de brouillage nuisible causé aux systèmes mobiles par satellite fonctionnant sur un même canal.

Un gain d'antenne de 6 dBi est autorisé (pour le matériel utilisant les bandes 5 250 - 5 350 MHz, 5 470 - 5 725 MHz et 5 725 - 5 825 MHz), conformément à la limite p.i.r.e. maximale permise selon l'annexe A9.2 afférent aux périphériques RSS210.

En outre, les utilisateurs doivent prendre garde au fait que les radars de grande puissance sont considérés comme des utilisateurs principaux (ce qui signifie qu'ils sont prioritaires) des bandes 5 250 - 5 350 MHz et 5 650 - 5 850 MHz et qu'ils pourraient causer des interférences et/ou des dommages aux appareils de réseau exempts de licence.

Troubleshooting the WLAN

Causes and countermeasures for troubles you may encounter while using your wireless LAN are described in the following table.

Problem	Possible Cause	Possible Solution
Unavailable network connection	Incorrect network name (SSID) or network key	**Ad hoc connection:** verify that the network names (SSID's) and network keys (WEP) of all computers to be connected have been configured correctly. SSID's and WEP key values must be identical on each machine. **Access Point (Infrastructure) connection:** set the network name (SSID) and network key to the same values as those of the access point. Set the Network Authentication value identically to that of the Access Point. Please consult your network administrator for this value, if necessary.
	Weak received signal strength and/or link quality	**Ad hoc connection:** Retry connection after shortening the distance to the destination computer or removing any obstacles for better sight. **Access Point (Infrastructure) connection:** Retry connection after shortening the distance to the access point or removing any obstacles for better sight.

Problem	Possible Cause	Possible Solution
Unavailable network connection (continued)	The WLAN device was deactivated or is disabled	Check if the wireless switch is turned On. Go to *Start > Control Panel*, and doubleclick on *Windows Mobility Center*. If the wireless network is off, click the *Turn wireless on* button.
	The computer to be connected is turned off	Check if the computer to be connected is turned ON.
	Incorrectly configured network settings	Recheck the configuration of your network settings.
	RF interference from Access Points or other wireless networks	The use of identical or overlapping RF channels can cause interference with the operation of the WLAN device. Change the channel of your Access Point to a channel that does not overlap with the interfering device.
	Wireless network authentication has failed	Re-check your Network Authentication, Encryption, and Security settings. Incorrectly configured security settings such as an incorrectly typed WEP key, a mis-configured LEAP username, or an incorrectly chosen authentication method will cause the LAN device to associate but not authenticate to the wireless network.
	Incorrect IP address configuration	This only applies to networks using static IP addresses. Please contact your network administrator for the correct settings.

Image Backup and Recovery Procedures

Thank you for purchasing a Fujitsu computer. Fujitsu is committed to bringing you the best computing experience with your new system.

It is very important that you create DVD copies of your Recovery Image and Bootable Disk before beginning to use your system. To do so, follow the instructions in the “Creating a Backup of Bootable Disk and Recovery Image” section of this document.

It is also important that you create a copy of the software that is essential for your system to access the internet (hereafter called “essential access software”) to external writable media or an external drive. To do so, follow the instructions in the “Creating a Backup of the System-Specific Software Drivers”.

Creating a Backup of Bootable Disk and Recovery Image

When you purchased your new system, a copy of the recovery image was loaded into a hidden partition on your hard disk drive. Having a copy of the recovery image available to you means that in the event of system failure, you will be able to restore it and re-install the essential access software using Fujitsu Software Auto Installer.

To make a copy of the recovery image to DVD disks, you will need three or four blank disks to create the copy. After creating the copy, be sure to label the disks and keep them in a safe place to ensure they do not get damaged.

i

Note: If your system does not have an internal writable DVD drive, connect your system to an external drive* before beginning the following steps.

1. Launch *System Restore and Recovery* from the desktop icon. It will allow you to create the Bootable Disk and the Recovery Image Disk Set.
2. On “Step 1: Select the Bootable Disk from the list”:
   a. Select a media type.
   b. Notice the number of disks that are needed for the set.
   c. Click *Next* to proceed.
3. On “Step 2: Confirm your Recovery Disk”, click *Next*.
4. On “Step 3:” follow the on-screen instructions to make the disk or disk set, then click *Start*. It takes approximately 20 minutes to make one disk.
5. On “Step 4”, when the disk creation is completed, a message appears. Click *Finish* to exit the program.
6. Repeat Step 1: Select *Recovery Disk* from the list and repeat the above steps 2(a), 2(b), 2(c), 3, 4 and 5.

* DEPENDING UPON YOUR OPTICAL DRIVE AND MEDIA FORMAT USED, SOME MEDIA TYPES MAY BE INCOMPATIBLE FOR CREATING IMAGE BACKUPS.

Creating a Backup of Essential Access Software

When you purchased your new system, a “Fujitsu Software Extractor” shortcut was loaded to “C:\Fujitsu\Drivers\AutoInstaller\”. This shortcut allows you to save the software driver packages along with the extracted Auto Installer software package to a selected location. It is recommended that you save these packages to writable media or an external drive. This ensures that in the event of system failure you will be able to re-install the essential access software.

1. Open the C:\Fujitsu\Drivers\AutoInstaller\ folder
2. Run “Fujitsu Software Extractor” as an Administrator
   a. Right-click on Fujitsu Software Extractor.
   b. Select the “Run as Administrator” option from the menu that is displayed.
3. The default save location is C:\Fujitsu\ AutoInstaller\ Drivers\. You can change the location by clicking on the *Browse* button and selecting your preferred location.

   Note: It is recommended that you change the default location and save the software packages to the external writable media or drive.
4. Click on the *Save Packages* button.
5. Fujitsu Software Extractor copies the zipped software packages and Readme files, and extracts the Auto Installer folder to the selected location.

i

Note: The extracted Auto Installer will later be used to install the software automatically on the system in the event of generic image restoration when the software is not pre-installed in the image.

RECOVER YOUR SYSTEM WHEN THE HARD DRIVE IS STILL ACCESSIBLE

Using the Recovery and Utility Tools

The Recovery and Utility tools consist of a variety of tools that will help you recover your recovery image and system images, and delete the data from your hard disk.

Methods for accessing the utilities

Recovery and Utility Tools are preinstalled in a hidden partition by the factory, or they can be accessed by using the bootable disk.

i

Note: The Recovery and Utility tools may be deleted from your hard disk drive if you modify the partitions. If that occurs, you will not be able to use the hidden partition for booting to Recovery and Utility Tools, but you will still be able to boot from the Bootable Disk.

Determining whether Recovery and Utility is pre-loaded

1. Turn on or reboot your system. When the Fujitsu logo appears, press the F12 key.
2. Use the Tab key to get to the Application Menu.
3. Check whether the Recovery and Utility option is present. If it is not present, it means that the utility must be used from the Bootable Disk. Proceed to “Running Recovery and Utility from the Bootable Disk” if Recovery and Utility is unavailable.

Running Recovery and Utility from hard disk

1. Turn on or reboot your system. When the Fujitsu logo appears, press the F12 key.
2. Use the Tab key to get to the Application Menu.
3. Cursor down to *Recovery and Utility* and press the Enter key.
4. Choose your language, if necessary. Select *Recovery and Utility* to proceed.
5. Three tool options appear: *Diagnostics*, *Recovery*, and *Utility* (refer to the Recovery and Utility tools section below for instructions on how to use these tools).
6. If this was successful please skip the next step and go to “Recovery and Utility tools.”
7. If this was NOT successful, please go to the next step.

Running Recovery and Utility from the Bootable disk

To verify/change the boot-up priority (rather than booting-up from the hard drive or an external media drive), perform the following steps:

1. Power on your system. When the Fujitsu logo appears on the screen, press the F12 key.
2. Insert the bootable disk into the drive tray.
3. Highlight the CD/DVD option from the Boot menu, then press Enter.
4. Click *OK*.
5. Select CD/DVD boot mode: UEFI Mode, if applicable, and then press Enter .
   While the files are being loaded from the disk, the Fujitsu logo screen will appear followed by a progress bar at the bottom of the screen.

Recovery and Utility tools

Note: Recovery and Utility tools may not be available on your system depending on the region from which the system was shipped.

Diagnostics tool: The Diagnostics tool is designed for use by IT professionals. It is not likely you will need to use this tool. If you should need to use this tool, perform the following steps:

1. Press the *Diagnostics Tool* button to start the Diagnostics tool.
2. Read the note, and then click *OK*.
3. Choose one or more of the following options for diagnostics on the Fujitsu Hardware Diagnostics Tool window: CPU, Memory, Display, Hard Disk, CD/DVD/BD, Floppy Disk, Keyboard, and Mouse.
4. Click the *Option* button in the Tool menu to specify how many times the tool should run diagnostics on each selected component.
5. Press *Execute* to start the Diagnostics tool.
6. After the execution is completed, the selected components are circled in red to indicate that they have been diagnosed and the result dialog window opens. Click *Close* to close the window.
7. Click *End* to close the Diagnostics tool, and then click *Yes* to confirm the end of diagnostics session.

Recovery tool: The Recovery tool contains two options:

- Restore C Drive: Restore recovery image (only C: drive)
- Restore Full Hard Drive: Restore recovery image (full hard drive).

You can use these tools to restore the Recovery Image from the hidden partition, and perform a full hard drive recovery. Please refer to instructions above for details on how to create a Recovery Image.

Restore the Recovery Image from Hidden Partition

1. Click [Restore C: drive] from Recovery and Utility tools
2. The progress bar is followed by “Restore Recovery image (only C: drive)” screen confirming that the Image will be restored to the C: drive. Click *Next*.
3. Read the instruction screen and select *Agree*, then click *Next*.
4. Click *OK* to acknowledge the warning message to restore recovery image to the C: drive.
5. When the progress bar appears, wait for the process to complete.
6. Click *Finish* when the process completes; the computer will restart to Windows.
7. Follow the steps listed in the “Auto Installation support for software packages from hidden partition” section.
8. Download FSDM (Fujitsu Software Download Manager) from the support site and download all the software applicable to the model and OS using FSDM.
9. Follow the steps listed in “Auto Installation support for software packages downloaded from support website” section.

RECOVER YOUR SYSTEM WHEN THE HARD DRIVE IS NOT BOOTABLE

Restore the Recovery Image for Full Hard Drive

Follow the steps in the “Recovering your Recovery Image using Recovery and Utility (for new hard drive or non-bootable hard drive)” section. You will need the Bootable Disk and the Recovery Disk Set for this task.

Utility tool: If applicable for your region, the Utility tool contains two options: Hard Disk Data Delete and Partition Creation.

The Hard Disk Data Delete utility is used to delete all data on the hard disk and prevent the data from being reused.

NOTE: Do not use the Hard Disk Data Delete utility unless you are absolutely certain that you want to erase your entire hard disk, including all partitions.

To delete hard disk data:

1. Click the *Hard Disk Data Delete* button. The progress bar appears, followed by the EULA screen.
2. Agree to the EULA and click *Next*.
3. Choose the hard disk from which the data should be deleted in the list of hard disks and click *Next*.

The Partition Creation utility is used to change the C: and D: drive partition sizes.

To run this utility: (This is not an option when using Windows 7.)

1. Click the *Partition Creation* button.
2. A progress bar appears, followed by the EULA screen. Agree to the EULA.
3. On the *Recovery Tool - Partition Creation* screen, move the slider to set disk size, and then click *OK*.
4. Click *Yes* in the *Partition Creation* confirmation dialog.

WARNING: It is highly recommended that you send your product to Fujitsu Service to replace a hard drive. A mistake could possibly destroy your computer, your new hard drive or both.

Recovering Your Recovery Image Using Recovery and Utility (for new hard drive or non-bootable hard drive)

If you have installed a new hard drive or your hard drive is not bootable, perform the following steps.

Note: You will need the Bootable disk and Recovery Image disk set for this recovery.

1. Power on your system. When the Fujitsu logo appears on the screen, press the Enter key.
2. Insert the bootable disk in your DVD drive, then click *OK*.
3. Highlight the CD/DVD option from the Boot Menu and press Enter.
4. Select CD/DVD boot mode: Select UEFI Mode, if applicable and press Enter. While the files are being loaded from the disk, the Fujitsu logo screen appears followed by a progress bar at the bottom of the screen.
5. Choose your language, if necessary.
6. Three tool options appear: *Diagnostics*, *Recovery* and *Utility*. Select *Recovery*.
   - For Windows 8.1: Select *Restore full hard drive*
   - For Windows 7: Select *Restoring the Factory Image (full hard drive recovery)*
7. Click *Next* to confirm full hard drive restoration. All data on HDD will be deleted.
8. Agree to EULA by selecting *Agree* option and clicking *Next*.
9. Click *Next* on the Recovery Disk Check screen to verify that the bootable disk has been inserted into the optical drive.
10. The *Checking for Recovery Dis*k screen appears followed by the prompt to insert the first disk. Click *OK* to continue. Repeat this step for all disks. After all recovery disks have been checked and the check has been completed, click *Next*.
11. Follow the prompt to reinsert the first recovery disk and click *Next*.
12. Click *OK* when you receive the final warning informing you that all data on drive C will be lost. This starts the recovery process.
13. Follow the prompts to insert the next recovery disks and click *OK*.
14. After the copying of the image to the HDD completes the restore process is complete, click *Finish* to restart the system. The computer will restart automatically and then go through the first boot process.
15. Follow the steps listed in “Auto Installation support for essential access software from backup location” section.
16. Download FSDM (Fujitsu Software Download Manager) from support site and download all the software applicable to the model and OS using FSDM.
17. Follow the steps listed in “Auto Installation support for essential access software downloaded from support website.

Installing the Software after the Recovery Image is Restored

Auto-installation support for essential access software from hidden partition

The below listed steps are applicable only in cases in which the recovery image restore and hidden partition contents have not been wiped out.

1. After the recovery image is restored, launch the desktop icon “Fujitsu Software Auto Installer”.
2. Double-click on “Fujitsu Software Auto Installer” desktop icon.
3. Click *Yes* on User Account Control Dialog box. This will take some time to process the software packages. A message will be displayed during this time, “Please wait while the content is being processed”.
4. If EULA is displayed for Fujitsu Software Auto Installer, accept the EULA, otherwise continue.
5. Then Fujitsu Software Auto Installer user interface will be launched providing ability to auto-install the essential access software on the system.
6. It is recommended that you install all the software in the listed order. You can *Select All*, to install the software in the order listed.
7. Click *Install* to start the installation.
8. After installing all the selected drivers, Installation Results window will be displayed. Click *OK*.
9. “You must restart the system for the settings to take effect. Do you wish to reboot now?” message appears. Select *Yes*.
10. The system will now reboot.
11. You can now connect to the internet and download FSDM (Fujitsu Software Download Manager) from the support site and download all the software applicable to the model and OS using FSDM if they are not downloaded yet.

Auto-installation support for essential access software from backup location

The below listed steps are applicable in cases in which a backup copy was created as mentioned in the section “Creating a Backup of essential access software”.

1. It is important to have the extracted Auto installer software package folder and Readme file in the same location as other software folders. Otherwise auto-installation of the software will not be supported.
2. Inside the Auto Installer software package, launch FjAutoinstall.exe as an Administrator.
3. Click *Yes* on the User Account Control dialog box. This will take some time to process the software packages. A message will be displayed during this time stating, “Please wait while the content is being processed”.
4. If EULA is displayed for Fujitsu Software Auto Installer, accept the EULA, otherwise continue.
5. The Fujitsu Software Auto Installer user interface will be launched providing ability to auto install the essential access software on the system.
6. It is recommended that you install all the software in the listed order. You can “Select All”, to install the software in the order listed.
7. Click the *Install* button to start the installation.
8. After installing all the selected drivers, *Installation Results* window is be displayed. Click *OK*.
9. “You must restart the system for the settings to take effect. Do you wish to reboot now?” message appears. Select *Yes*.
10. The system will now reboot.

Auto Installation support for the software downloaded from support website

1. Download FSDM (Fujitsu Software Download Manager) from the support site and download all the drivers applicable to the model and OS using FSDM if they are not downloaded yet.
2. When the software packages are downloaded from web, it is important to download the Auto Installer Software package and the model/language- specific Readme file if you prefer to auto install the software.
3. It is important to have the extracted Auto Installer software package folder and Readme file in the same location as other software folders. Otherwise auto-installation of the software will not be supported.
4. Inside the Auto Installer software package, launch FjAutoinstall.exe as administrator.
5. Click *Yes* on the User Account Control dialog box. This will take some time to process the software packages. A message will be displayed during this time stating “Please wait while the content is being processed”.
6. If EULA is displayed for Fujitsu Software Auto Installer, accept the EULA, otherwise continue.
7. The Fujitsu Software Auto Installer user interface will be launched providing the ability to auto install the software downloaded from support site.
8. It is recommended that you install all the software in the listed order. You can *Select All*, to install the software in the order listed.
9. Click the *Install* button to start the installation.
10. After installing all the selected drivers, the Installation Results window is displayed. Click *OK*.
11. “You must restart the system for the settings to take effect. Do you wish to reboot now?” message appears. Select *Yes*.
12. The system will now reboot.

Downloading Driver Updates

To ensure that you always have the most current driver updates related to your system, occasionally access the Fujitsu Software Download Manager (FSDM) utility. The FSDM utility is available from the Fujitsu Support site. FSDM will allow you to view and download a list of the most current drivers, utilities, and applications to determine whether you have the latest versions. To download the FSDM Utility, go to the Support Site: "http://support.fujitsupc.com/CS/Portal/support.do?srch=DOWNLOADS".

If you are planning on downgrading, upgrading or changing versions of your operating system during this process please see the User's Guide for more information at "http://solutions.us.fujitsu.com".

Index

A
AC adapter
    connecting 18
    Set up 18
Acoustic warnings 80
Audio connections 71

B
Battery 35
    battery charge 36
    Caring for and maintaining 35
    charge level 35
    Charging 35
    Discharges too quickly 79
    see Rechargeable battery 35
    Service life 35
battery charge meter 35
BIOS Setup Utility
    , protecting with password 63
    calling 72
    exiting 74
    operation 73
    Settings 72
Bluetooth, Safety notes 13

C
Charging back-up battery 76
Choose a location 18
Components
    Keyboard cover 48
Configuration, BIOS Setup Utility 72
Configuring hardware 72
Configuring system 72
Connecting audio devices 71
Connecting headphones 71
Cradle 44
    Connecting a Tablet PC 45

D
dark touchscreen 76
Date not correct 76
Declaration of conformity 90
Devices,
    connecting 68
    disconnecting 68
Display orientation
    select 25
DOC (INDUSTRY CANADA) NOTICES 88

E
Ending
    energy saving mode 78
Energy
    Energy consumption 36
    Energy saving 13
    Energy saving functions 36
Energy saving 13
Error messages on the screen 80
Errors
    Acoustic warnings 80
    Screen messages 80
Ethernet LAN 41

F
Factory Image 75
Fault
    correction 75
Fingerprint sensor 62
    configuring 62
First-time setup 17

G
Getting started 17
GPS 42

H
Hard disk:
    restoring the contents 75
HDMI port 69

I
Important notes 12
Incorrect time 76
Information,
    safety 12

K
Keyboard cover
    Components 48
    Connecting a Tablet PC 49
keyboard docking station
    Connecting a Tablet PC 53
    Ports 51

L
Landscape format
    display 25

M
Making ready to use 18
Memory card
handling 37
inserting 37
removing 38
Mobile operation 13
Monitor
connection 69
no image 77
remains blank 77
unstable image 77
Monitor connection
see VGA port 69

N
Notebook
before traveling 14
switching off 23
Notes 12
disposal / recycling 88
Energy saving 13
touchscreen 24
Transport 13

O
Operating system
activating system protection 64
cancel system protection 64
Protecting with password 64
Operating system, recovering 75

P
Packaging 17
Password
changing 64
entering 63
removing 64
Password protection 63
hard disk 65
Peripherals,
connecting 68
disconnecting 68
Portrait format
display 25
Ports 44
keyboard docking station 51
Power-on Power-on indicator 22
Printer does not print 79

R
Rechargeable battery
see battery 35

S
Safety information 12
Screen connection
see VGA port 69
Security functions 61
Smart Card 66
SystemLock 66
Service life, battery 35
Set up
Device 18
Setup
see BIOS Setup Utility 72
Slot
Memory cards 37
Status indicators 21
Summer time 76
Supervisor HDD password
changing 64
Supervisor password
entering 63
removing 64
Suspend/Resume button 22
Switching on for the first time 19
Symbols
Indicators 21
System settings, BIOS Setup Utility 72

T
Tablet
operating 21
Tablet PC
cannot be started 78
doesn’t work 78
transporting 13
Tablet, operation 21
Tablet: Switching on 22
Technical data
AC adapter 85
The wireless connection to a network
does not work 79
Time not correct 76
Tips 75
Touchscreen
difficult to read 76
notes 24
reflected glare 76
remains dark 76
TPM 67

Transport 13
Damage during transportation 17
Traveling, notebook 14
Troubleshooting 75
Trusted Platform Module 67

U
USB ports 70
User HDD password
changing 64
User password
entering 63
removing 64

V
VGA port 69

W
Webcam 34
Winter time 76
wireless components
Safety notes 13
Wireless LAN
Safety notes 13
Wrong date/time 76