EMC Technologies Report Number: M040222_Cert_Mace_Atheros_2.4

APPENDIX O1 – Host PC - User Manual

T Series.book Page 1 Thursday, July 31, 2003 10:49 AM

Copyright

Fujitsu PC Corporation has made every effort to ensure the accuracy and completeness of this document. However, as ongoing development efforts are continually improving the capabilities of our products, we cannot guarantee the accuracy of the contents of this document. We disclaim liability for errors, omissions, or future changes.

Fujitsu, the Fujitsu logo, and LifeBook are registered trademarks of Fujitsu Limited.

The following are registered trademarks of Microsoft Corporation: MS, MS-DOS, Windows.

PCMCIA is a trademark of the Personal Computer Memory Card International Association.

Intel and Pentium are registered trademarks of Intel Corporation.

Adobe Acrobat Reader is a registered trademark of Adobe System Inc.

PowerQuest and Drive Image are registered trademarks of PowerQuest Corporation.

All other trademarks mentioned herein are the property of their respective owners.

© Copyright 2003 Fujitsu PC Corporation. All rights reserved. No part of this publication may be copied, reproduced, or translated, without prior written consent of Fujitsu PC Corporation. No part of this publication may be stored or transmitted in any electronic form without the written consent of Fujitsu PC Corporation.

B5FH-9011-01EN-00

DECLARATION OF CONFORMITY
according to FCC Part 15

Responsible Party Name:	Fujitsu PC Corporation
Address:	5200 Patrick Henry Drive Santa Clara, CA 95054
Telephone:	(408) 982-9500
Declares that product:	Model Configuration: LifeBook T3010 Tablet PC LifeBook T3010D Tablet PC Complies with Part 15 of the FCC Rules.

This device complies with Part 15 of the FCC rules. Operations are subject to the following two conditions: (1) This device must not be allowed to cause harmful interference, (2) This device must accept any interference received, including interference that may cause undesired operation.

T Series.book Page 2 Thursday, July 31, 2003 10:49 AM

T Series.book Page 3 Thursday, July 31, 2003 10:49 AM

Fujitsu LifeBook® T Series Tablet PC
Table of Contents

1

PREFACE

Preface
About This Guide 3
FPC Contact Information 3
Warranty 3

2

GETTING TO KNOW YOUR TABLET PC

Overview
Unpacking 7
Optional Accessories 8

Locating the Controls and Connectors
Top and Front Components 10
Left-Side Panel Components 11
Right-Side Panel Components 12
Rear Panel Components 13
Bottom Components 14

Status Indicator Panel
Power Indicator 15
AC Adapter Indicator 15
Battery Level Indicators 15
Battery Charging Indicator 16
Hard Drive Access Indicator 16
NumLk Indicator. 16
CapsLock Indicator. 16
ScrLk Indicator 16
Security Indicator 16

Display Panel
Opening the Display Panel 17
Using the System as a Tablet 17
Adjusting Display Panel Brightness 18

Keyboard
Using the Keyboard 19
Numeric Keypad. 19
Windows Keys 19
Cursor Keys 20
Function Keys. 20

LifeBook Security/Tablet PC Buttons
Changing Tablet PC Button Functions 22
Setting up LifeBook Security Panel 22
Passwords 22
Using Your LifeBook Security Panel 23
Uninstalling the Security Panel Application 24

Touchpad Pointing Device
Clicking 25
Double-Clicking 25
Dragging 26
Scrolling 26
Touchpad Control Adjustment 26

Pen and Active Digitizer
Using the Pen. 27
Calibrating the Pen. 27
Replacing the Pen Tip. 28
Using the Active Digitizer 28

Volume Control
Controlling the Volume 29

3

USING YOUR TABLET PC

Power Sources
Connecting the Power Adapters. 33

Starting Your Tablet PC
Power On. 34
Boot Sequence 34
BIOS Setup Utility. 34
Booting the System 34

T Series.book Page 4 Thursday, July 31, 2003 10:49 AM

Activating Additional Utilities 35
Registering Your LifeBook T Series Tablet PC . . . 35

Power Management

Suspend/Resume Button 36
Standby Mode 36
Hibernate Mode. 37
Display Timeout 37
Hard Disk Timeout 37
Windows Power Management. 37
Restarting the System. 37
Power Off 38

4

USER-INSTALLABLE FEATURES

Lithium ion Battery

Recharging the Battery. 41
Replacing the Battery 42

Memory Upgrade Module

Installing Memory Upgrade Modules 43
To Remove a Memory Upgrade Module 43
Checking the Memory Capacity 44

PC Cards

Installing PC Cards 45
Removing PC Cards 45
Smart Card Reader. 45

Port Replicator

Rear Panel Components. 46
Front Panel Components 47
Attaching the Port Replicator 47
Detaching the Port Replicator. 47

Device Ports

Modem (RJ-11) Jack 48
Internal LAN (RJ-45) jack 48
Docking Port 48
Universal Serial Bus Ports 48
Infrared Port. 48
Microphone Jack 49
Headphone Jack. 49
External Monitor Port. 49

5

TROUBLESHOOTING

Troubleshooting

Identifying the Problem 53
Specific Problems 53
Troubleshooting Table 54
Power On Self Test Messages 61
Modem Result Codes. 62

Restoring Your Pre-installed Software

Drive Image Special Edition (DISE) 63

6

CARE AND MAINTENANCE

Care and Maintenance

LifeBook T Series Tablet PC 67
Keyboard 68
Batteries. 68
Optional Floppy Disk Drive and Floppy Disks. . . 68
Optional CD Drive and CDs. 68
PC Cards 69

7

SPECIFICATIONS

Specifications

Configuration Label 73
Physical Specifications 73
Processing Specifications 73
Memory/Storage Specifications 73
Display Specifications. 73
Interface Specifications 73
Power Specifications 74
Environmental Specifications 74
Agency Approval Specifications 74
Additional Specifications 74
Regulatory Information 75

T Series.book Page 5 Thursday, July 31, 2003 10:49 AM

8

GLOSSARY

Glossary 81

APPENDIX: INTEGRATED WIRELESS LAN USER'S GUIDE

FCC Regulatory Information. 89

Before Using the Wireless LAN

For Better Communications 91
Stopping Transmission 92
Starting Transmission 92

Connection Using Windows XP

Flow of Operations. 93
Preparation for Wireless LAN Connection. 93
Connection to the Network 95

Other settings

Setting of Power-saving Function. 99

Troubleshooting

Troubleshooting the Wireless LAN 100

IP address information

About IP Addresses 102

Specifications

Wireless LAN Specifications 103

T Series.book Page 6 Thursday, July 31, 2003 10:49 AM

1
Preface

T Series.book Page 2 Thursday, July 31, 2003 10:49 AM

T Series.book Page 3 Thursday, July 31, 2003 10:49 AM

Preface

ABOUT THIS GUIDE

The LifeBook® T Series Tablet PC from Fujitsu PC Corporation is a powerful convertible computer. It can be used either as a standard notebook using keyboard input, or in tablet configuration using pen input. It is powered by an Intel® microprocessor, has a built-in color display with an active digitizer, and brings the computing power of desktop personal computers (PCs) to a portable and versatile environment.

This manual explains how to operate your LifeBook T Series Tablet PC's hardware and built-in system software. Your LifeBook T Series Tablet PC is compatible with the IBM® PC AT, and it comes with Windows® XP Tablet Edition pre-installed.

Your LifeBook T Series Tablet PC is a completely self-contained unit with an active-matrix (TFT) color LCD display. It has a powerful interface that enables it to support a variety of optional features.

Conventions Used in the Guide

Keyboard keys appear in brackets.
Example: [Fn], [F1], [Esc], [Enter] and [Ctrl].

Pages with additional information about a specific topic are cross-referenced within the text.
Example: *(See page xx.)*

On screen buttons or menu items appear in bold.
Example: Click **OK** to restart your Tablet PC.

DOS commands you enter appear in Courier type.
Example: `Shutdown the computer?`

The information icon highlights information that will enhance your understanding of the subject material.

The caution icon highlights information that is important to the safe operation of your computer, or to the integrity of your files. Please read all caution information carefully.

The warning icon highlights information that can be hazardous to either you, your LifeBook T Series Tablet PC, or your files. Please read all warning information carefully.

FPC CONTACT INFORMATION

Service and Support

You can contact FPC Service and Support the following ways:

- Toll free: 1-800-8Fujitsu (1-800-838-5487)
- Fax: 1-408-764-2724
- E-mail: 8fujitsu@fujitsupc.com
- Web site: http://www.fujitsupc.com

Before you place the call, you should have the following information ready so that the customer support representative can provide you with the fastest possible solution:

- Product name
- Product configuration number
- Product serial number
- Purchase date
- Conditions under which the problem occurred
- Any error messages that have occurred
- Hardware configuration
- Type of device connected, if any

Fujitsu Online

You can go directly to the online Fujitsu Product catalog for your Tablet PC. Go to Start -> All Programs -> Service & Support Software, and click on Pen Accessories Web site.

You can also reach Fujitsu Service and Support online by going to Start -> All Programs -> Service & Support Software, and clicking on Fujitsu Service & Support Web site.

You must have an active internet connection to use the online URL links.

WARRANTY

Your LifeBook T Series Tablet PC is backed by an International Limited Warranty and includes toll-free technical support. Check the service kit that came with your Tablet PC for warranty terms and conditions.

T Series.book Page 4 Thursday, July 31, 2003 10:49 AM

T Series.book Page 5 Thursday, July 31, 2003 10:49 AM

2

Getting to Know Your Tablet PC

T Series.book Page 6 Thursday, July 31, 2003 10:49 AM

T Series.book Page 7 Thursday, July 31, 2003 10:49 AM

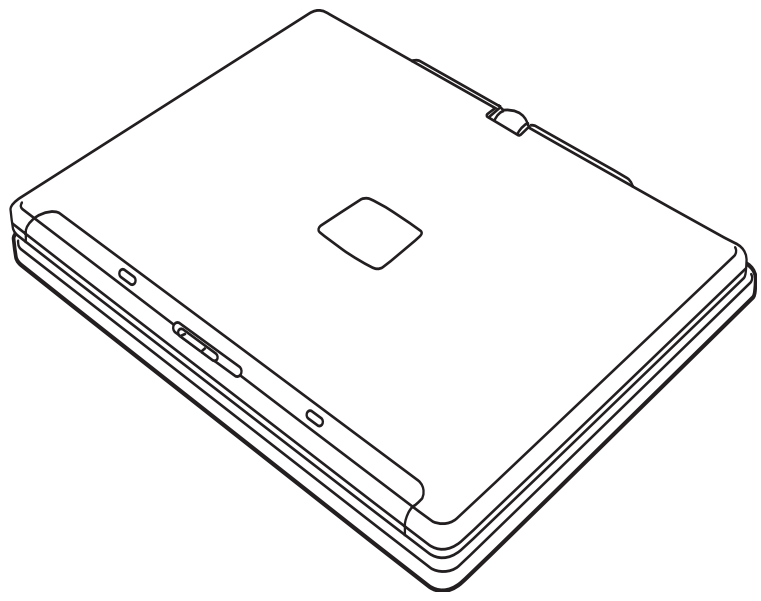

Figure 2-1. Fujitsu LifeBook T Series Tablet PC

Overview

This section describes the components of your Fujitsu LifeBook T Series Tablet PC. We strongly recommend that you read it before using your Tablet PC, even if you are already familiar with mobile computers.

UNPACKING

When you receive your LifeBook T Series Tablet PC, unpack it carefully, and compare the parts you have received with the items listed below.

For a pre-configured model you should have:

- LifeBook T Series Tablet PC *(Figure 2-1)*
- AC adapter with AC power cord (Figure 2-2)
- Phone/Modem (RJ-11) telephone cable
- Pen (located in pen holder)
- Driver and Application Restore (DAR) CD
- Getting Started Guide
- User's Guide (this document)
- International Limited Warranty Booklet
- Microsoft Windows Manual and Certificate of Authenticity
- Lithium ion battery (pre-installed)

You may also have one or more of the following optional devices in the box:

- Port Replicator (Figure 2-3)
- External USB Floppy Disk Drive
- External DVD/CD-ROM Combo Drive
- External USB CD-ROM Drive

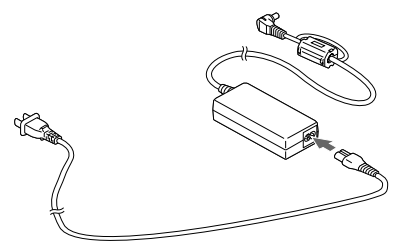

Figure 2-2. AC Adapter

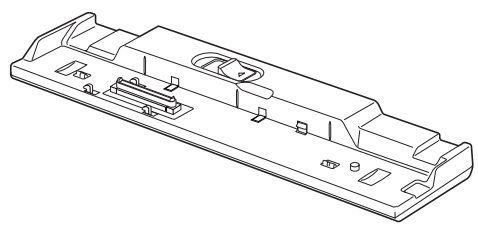

Figure 2-3. Optional Port Replicator

T Series.book Page 8 Thursday, July 31, 2003 10:49 AM

OPTIONAL ACCESSORIES

The following optional accessories can be used with the LifeBook T Series Tablet PC. Refer to the instructions provided with these accessories for details on their use. For the latest list of accessories available for your LifeBook T Series Tablet PC, be sure to frequently check the Fujitsu Web site at: www.fujitsupc.com

Peripheral/Accessory	Fujitsu Part Number
Docking Options	
LifeBook T Series Tablet PC port replicator	FPCPR39AP
Carrying Cases	
Duo Travel Bag	FPCCC16
Director leather carrying case	FPCCC22
Diplomat carrying case	FPCCC02
Propak backpack	FPCCC07
Storage Options	
External USB floppy disk drive	FPCFDD12
External DVD/CD-RW combo drive	FPCDVR26
External CD-ROM drive	FPCCD33AP
Memory	
256 MB SDRAM, DDR266	FPCEM51AP
512 MB SDRAM, DDR 266	FPCEM55AP
1.0 GB SDRAM, DDR 266	FPCEM87AP
128 MB Compact Flash card	FPCEMC02
256 MB Compact Flash card	FPCEMC03
128 MB Secure Digital memory card	FPCEMC01
Power Options	
AC Adapter with US cord	FPCAC23
Main battery	FPCBP73AP
Auto/airline adapter	FPCAA02
Battery charger	FPCBC06
Input Accessories	
Replacement pen set (2-pack)	FPCPN11AP
USB optical mouse	FPCMO08AP
Additional Accessories	
Smart Card holder	FPCSCH01
Wireless LAN card, 802.11b	FPCWL08
Compact Flash card adapter	FPCCFA01
Notebook Guardian Lock	FPCLCK02
Logitech wireless keyboard and mouse	FPCKB04

Table 2-1. Optional Accessories for LifeBook T Series Tablet PC

T Series.book Page 9 Thursday, July 31, 2003 10:49 AM

Locating the Controls and Connectors

Connectors and peripheral interfaces on the LifeBook T Series Tablet PC and the optional port replicator allow you to connect a variety of devices. Specific locations are illustrated in Figures 2-4 through 2-8. The table below provides a short description of each icon on the LifeBook T Series Tablet PC. Each of the icons is either molded into or printed on the Tablet PC chassis.

Connection	Tablet PC Icon	Purpose
DC in connector		Connect an external power source such as the AC adapter or auto/airline adapter.
USB Port		Connect Universal Serial Bus 2.0 or 1.1 compliant devices to the Tablet PC.
PCMCIA Card slot		Install Type I, Type II, or Type III PC Cards.
Microphone jack		Connect an external microphone. The internal microphone is disabled when you plug in an external microphone.
Headphone jack		Connect stereo headphones or powered external speakers. The internal speaker is disabled when you plug in external headphones or powered speakers.
IrDA/FIR port		An infrared transceiver built into the Tablet PC allows you to communicate with other devices that are compliant with IrDA Standard Rev. 1.1. Effective range for infrared communication is about 3 feet, and within 15 degrees off center. A clear line-of-sight path must exist between the IrDA port on the computer and the IrDA transceiver on the other device.
Modem		Connect a telephone line to the internal modem using a standard RJ-11 telephone plug.
Tablet Dock port		Connect the LifeBook T Series Tablet PC port replicator or other approved docking device. Refer to documentation accompanying the docking device for more information.
Security lock slot		The security slot allows you to secure the Tablet PC using Kensington-compatible locking devices.
Suspend/Resume button		The Suspend/Resume button allows you to suspend Tablet PC activity without powering off, resume your Tablet PC from suspend mode, and power on the system when it has been shut down from Windows.
Local Area Network (LAN)		The LAN (RJ-45) jack is used to connect the internal Fast Ethernet (10/100 Base-T/TX) to a Local Area Network (LAN) in your office or home, or broadband devices such as a cable modem, DSL, or satellite Internet.
Battery Release Latch		The battery release latch allows you to remove the battery from your system for storage or replacement.
Wireless LAN On-Off Switch		The wireless LAN switch allows you to turn power to the optional wireless LAN device on and off.

Table 2-2. System icons

T Series.book Page 10 Thursday, July 31, 2003 10:49 AM

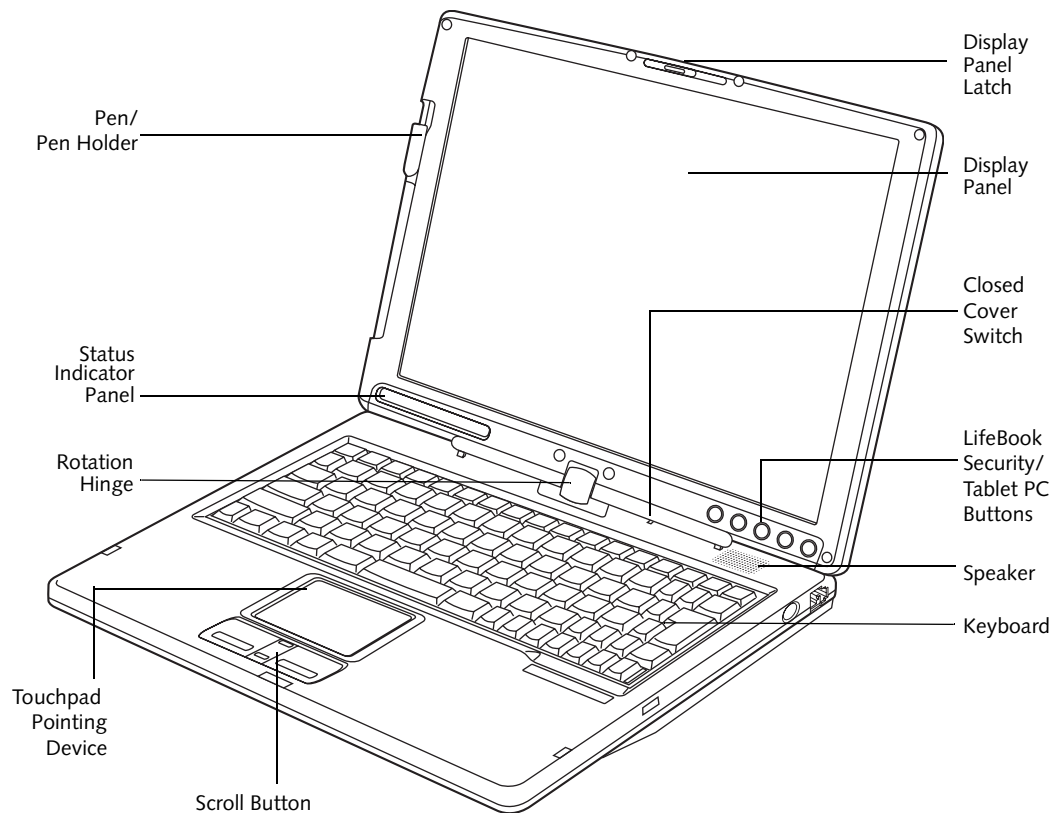

Figure 2-4. LifeBook T Series Tablet PC with display open

TOP AND FRONT COMPONENTS

The following is a brief description of the top and front features of the LifeBook T Series Tablet PC. (Figure 2-4)

Pen/Pen Holder

The pen is used as the interface with the active digitizer display.

Closed Cover Switch

The closed cover switch turns off the LCD back lighting when the display panel is closed.

Display Panel Latch

The display panel latch locks and releases the display panel.

Status Indicator Panel

The Status Indicator Panel displays symbols that correspond to specific components of your LifeBook T Series Tablet PC. See “Status Indicator Panel” on page 15.

LifeBook Security/Tablet PC Buttons

The LifeBook T Series Tablet PC Security/Tablet PC Buttons provide hardware security and application launch capabilities. See “LifeBook Security/ Tablet PC Buttons” on page 21.

Touchpad Pointing Device

The Touchpad pointing device consists of two mouse-like buttons and one scroll button. See “Touchpad Pointing Device” on page 25.

Keyboard

A full-function keyboard with dedicated Windows keys. See “Keyboard” on page 19.

Display Panel

The display panel is a color LCD panel with back lighting for the display of text and graphics and active digitizer functionality.

Rotation Hinge

The rotation hinge allows you to transform your Tablet PC from a notebook configuration into a tablet configuration. For more information, see See “Using the System as a Tablet” on page 17.

T Series.book Page 11 Thursday, July 31, 2003 10:49 AM

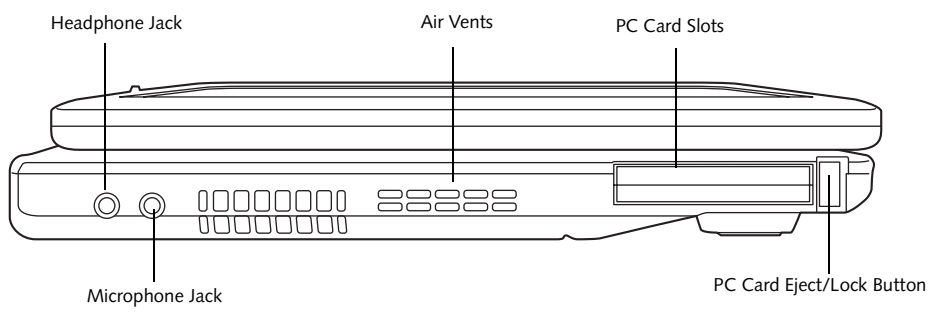

Figure 2-5. LifeBook T Series Tablet PC left-side panel

LEFT-SIDE PANEL COMPONENTS

Following is a brief description of your Tablet PC's left-side components. (Figure 2-5)

PC Card Slots

The PC Card Slots allow you to install two Type II or one Type III PC Card. The PC Card Eject Button is used when ejecting a PC Card from the slot. See "PC Cards" on page 45.

Headphone Jack

The headphone jack allows you to connect headphones or powered external speakers. See "Headphone Jack" on page 49.

Microphone Jack

The microphone jack allows you to connect an external mono microphone. See "Microphone Jack" on page 49.

T Series.book Page 12 Thursday, July 31, 2003 10:49 AM

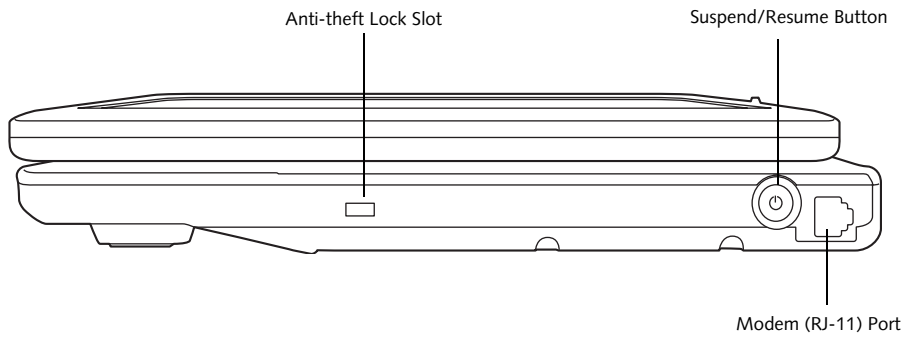

Figure 2-6. LifeBook T Series Tablet PC right-side panel

RIGHT-SIDE PANEL COMPONENTS

Following is a brief description of your Tablet PC's right-side components.

Suspend/Resume Button

The Suspend/Resume button allows you to suspend Tablet PC activity without powering off, resume your Tablet PC from standby mode, and power on your system when it has been shut down from the Windows operating system. See "Power On" on page 34.

Modem (RJ-11) Telephone Port

The Modem (RJ-11) telephone port is for attaching a telephone line to the internal multinational 56K modem.

The internal multinational modem is not intended for use with Digital PBX systems. Do not connect the internal modem to a Digital PBX as it may cause serious damage to the internal modem or your entire LifeBook T Series Tablet PC. Consult your PBX manufacturer's documentation for details. Some hotels have Digital PBX systems. Be sure to find out BEFORE you connect your modem.

The internal modem is designed to the ITU-T V.90 standard. Its maximum speed of 53000 bps is the highest allowed by FCC, and its actual connection rate depends on the line conditions. The maximum speed is 33600 bps at upload.

Anti-theft Lock Slot

The anti-theft lock slot allows you to attach a optional physical lock-down device.

T Series.book Page 13 Thursday, July 31, 2003 10:49 AM

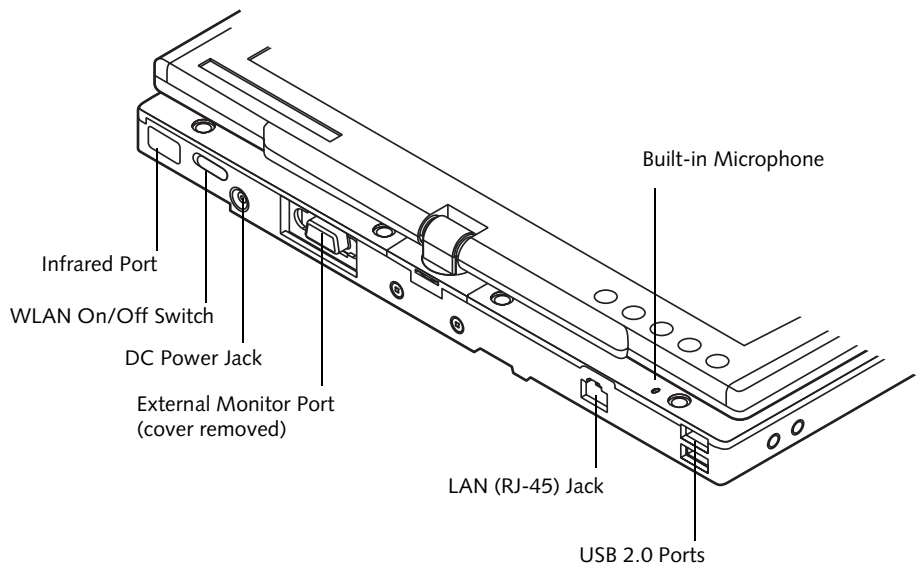

Figure 2-7. LifeBook T Series Tablet PC rear panel

REAR PANEL COMPONENTS

DC Power Jack

The DC power jack allows you to plug in the AC adapter or the optional Auto/Airline adapter to power your Tablet PC and charge the internal Lithium ion Battery.

External Monitor Port

The external monitor port allows you to connect an external VGA or SVGA CRT monitor. Note that when the optional Port Replicator is attached to the system, you must use the external monitor port on the Port Replicator rather than the port on the system. See "External Monitor Port" on page 49.

USB 2.0 Ports

The two USB 2.0 ports allow you to connect Universal Serial Bus devices. See "Universal Serial Bus Ports" on page 48.

Infrared Port

The fast IrDA compatible port allows you to communicate with another IrDA compatible infrared device without a cable.

LAN (RJ-45) Jack

The internal LAN (RJ-45) port is used for an internal Fast Ethernet (10/100 Base-T/TX) connection. See "Internal LAN (RJ-45) jack" on page 48.

Built-in Microphone

The built-in microphone allows mono audio input.

WLAN On/Off Switch

The wireless LAN On/Off Switch is used to power off the wireless antenna when not in use.

T Series.book Page 14 Thursday, July 31, 2003 10:49 AM

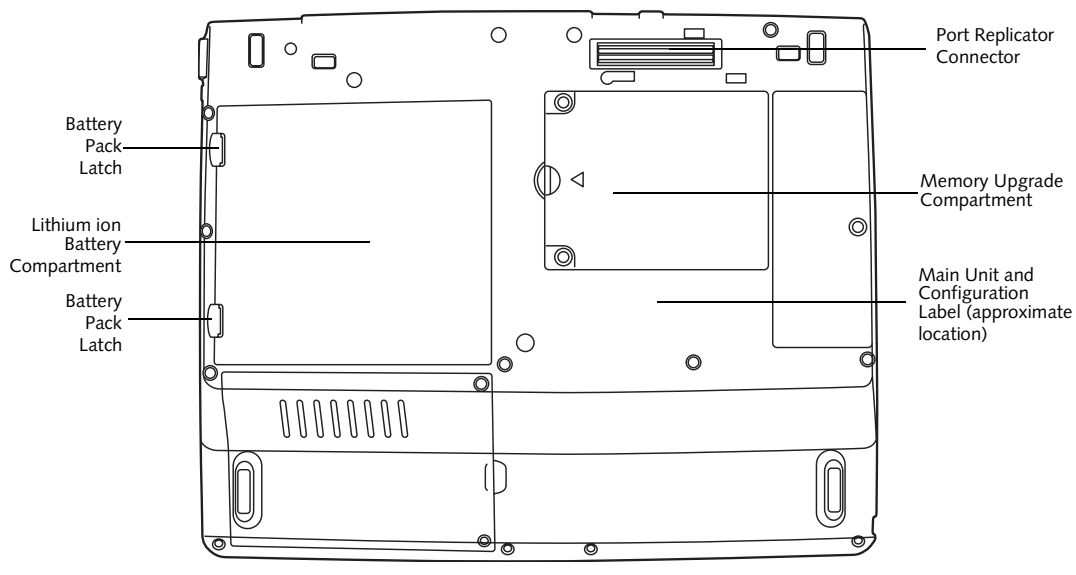

Figure 2-8. LifeBook T Series Tablet PC bottom panel

BOTTOM COMPONENTS

Following is a brief description of your Tablet PC's bottom panel components. (Figure 2-8)

Lithium ion Battery Compartment

The battery compartment contains the internal Lithium ion battery. The battery should be removed when the computer is stored over a long period of time or for swapping a discharged battery with a charged Lithium ion battery. See "Lithium ion Battery" on page 41.

Port Replicator Connector

This connector allows you to connect the optional port replicator.

Main Unit and Configuration Label

The configuration label shows the model number and other information about your LifeBook T Series Tablet PC. In addition, the configuration portion of the label has the serial number and manufacturer information that you will need to give your support representative. It identifies the exact version of various components of your Tablet PC.

Memory Upgrade Compartment

Your Tablet PC comes with high speed Synchronous Dynamic RAM (SDRAM). The memory upgrade compartment allows you to expand the system memory capacity of your Tablet PC, hence improving overall performance. See "Memory Upgrade Module" on page 43.

T Series.book Page 15 Thursday, July 31, 2003 10:49 AM

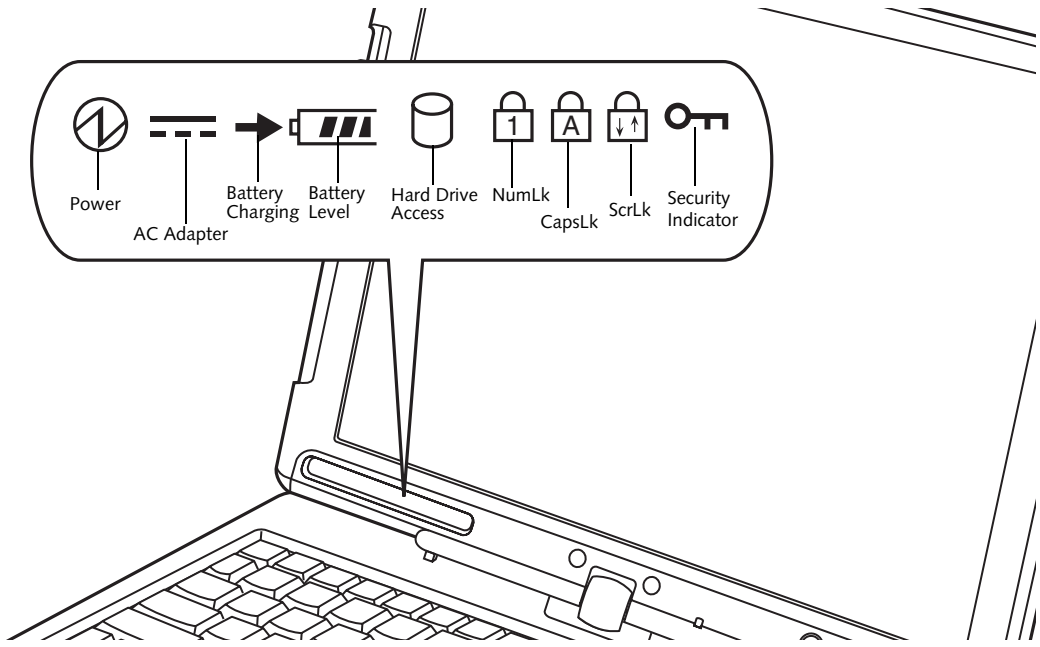

Figure 2-9. Status Indicator Panel

Status Indicator Panel

The Status Indicator Panel displays symbols that correspond to specific components of your LifeBook T Series Tablet PC. These symbols tell you how each of those components is operating. *(Figure 2-9)*

POWER INDICATOR

The Power indicator symbol states whether your system is operational. It has several different states, each of which tells you what mode your Tablet PC is in at that time.

- Steady On: This means that there is power to your Tablet PC and that it is ready for use.
- Flashing: This means that your Tablet PC is in Standby mode.
- Steady Off: This means that your system is either in Hibernate mode, or that your Tablet PC has been turned off.

If you are charging your battery, the Power indicator symbol will remain on even if your LifeBook T Series Tablet PC is shut off. The Power indicator symbol will also remain on if you have either adapter connected and are shut down from Windows.

AC ADAPTER INDICATOR

The AC adapter indicator states whether your notebook is operating from the AC adapter, the auto/airline adapter or the batteries. This icon has two different states that can tell you what power source your LifeBook notebook is using.

- **On:** This means that either of the adapters are currently in use.
- **Off:** Power is only coming from the batteries, and you do not have an adapter connected.

BATTERY LEVEL INDICATORS

The Battery Level indicators state whether or not the Lithium ion battery is installed and how much charge is available within the battery. *(Figure 2-10)*

Additionally, this indicator displays when an overcurrent is detected. If an overcurrent is detected, the battery stops charging and the Battery Level indicator blinks at the rate of once per second. To stop the indicator from blinking, you must disconnect the power adapter.

T Series.book Page 16 Thursday, July 31, 2003 10:49 AM

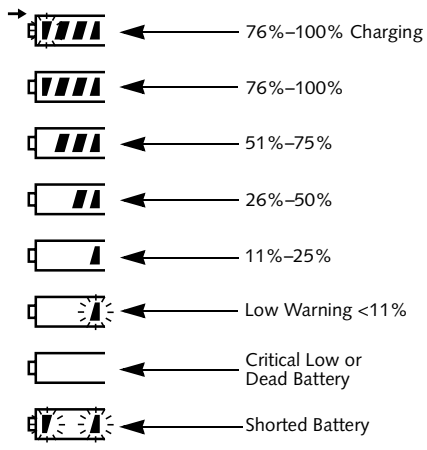

Figure 2-10. Battery Level Indicator

A shorted battery is damaged and must be replaced. *(Figure 2-10)*

If there is no battery activity and the power adapters are not connected, the Battery Level indicators will also be off.

BATTERY CHARGING INDICATOR

Located to the left of the Battery Level indicator is a small arrow symbol. This symbol states whether the battery is charging. This indicator will flash if the battery is too hot or cold to charge.

Batteries subjected to shocks, vibration or extreme temperatures can be permanently damaged.

HARD DRIVE ACCESS INDICATOR

The Hard Drive Access indicator states whether your internal hard drive is being accessed.

NUMLK INDICATOR

The NumLk indicator states that the integral keyboard is set in ten-key numeric keypad mode.

If there is no battery activity and the power adapters are not connected, the Battery Level indicators will also be off.

If you are using the optional external numerical keypad, pressing the [NumLk] key will activate the external keypad. The indicator will come on, however it will not change any of the functionality of your keyboard keys.

CAPSLOCK INDICATOR

The CapsLock indicator states that your keyboard is set to type in all capital letters.

SCRLK INDICATOR

The ScrLk indicator states that your scroll lock is active.

SECURITY INDICATOR

The Security Indicator flashes (if a password was set) when the system resumes from Off or Standby modes. You must enter the password that was set in the Security Panel before your system will resume operation.

T Series.book Page 17 Thursday, July 31, 2003 10:49 AM

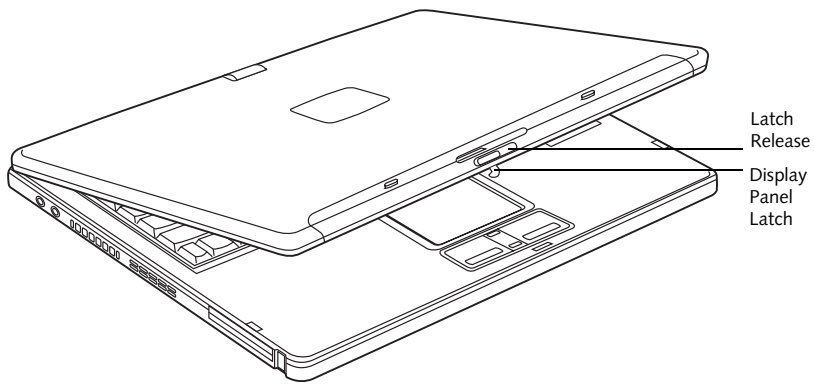

Figure 2-11. Opening the display

Display Panel

Your LifeBook T Series Tablet PC contains a display panel that is backlit for easier viewing in bright environments. The convertible design of your Tablet PC allows you to open the display fully, rotate it 180 degrees, and lay it face up on the keyboard. This allows you to use the system as a tablet, much as you would a pad of paper.

OPENING THE DISPLAY PANEL

1. Slide the latch release to the right. This releases the locking mechanism. While holding the latch release, lift display cover.
2. Lift the display backwards, being careful not to touch the screen, until it is at a comfortable viewing angle. *(Figure 2-11)*

USING THE SYSTEM AS A TABLET

If you would like to use the system as a tablet, perform the following steps.

Rotate the system display only in the direction indicated in the procedure. Turning the display in the incorrect direction could cause hinge damage.

In the following step, be sure to position the display perpendicular to the keyboard, otherwise the keyboard or display cover could get scratched.

1. Lift the display until it is perpendicular to the keyboard. *(Figure 2-13)*.
2. When the display is perpendicular to the keyboard, rotate it clockwise (when viewed from the top). Be very careful to rotate it in the direction indicated. *(Figure 2-14)*. Turn the display 180 degrees so that it is facing backwards. *(Figure 2-15)*
3. Holding the top edge of the display panel, pull it forward until it is lying nearly atop the keyboard.
4. Push the latch towards the display (See "A" in Figure 2-12). The latch will pivot so the top latch disappears, and the bottom latch appears (See "B" in Figure 2-12). Holding the latch down, lay the display flush against the system so that the latch engages. You can now use your system as a tablet. *(Figure 2-16)*

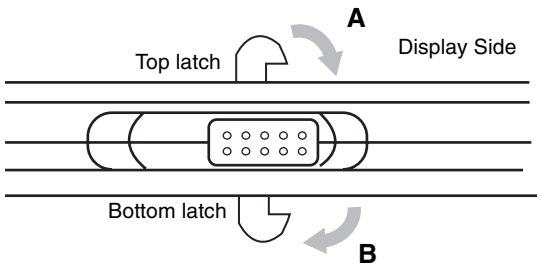

Figure 2-12. Latching/Unlatching

5. To return the system to notebook configuration, repeat step 3 and 2. Be sure to turn the display in the opposite direction when performing step 2.

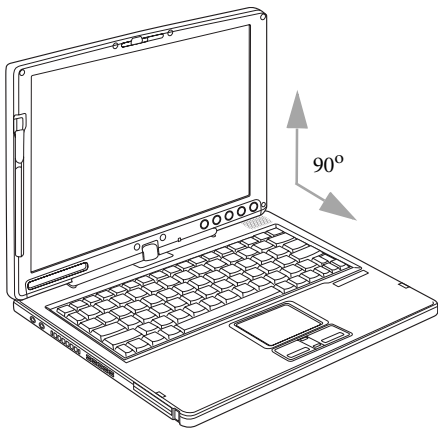

Figure 2-13. Fully open display

T Series.book Page 18 Thursday, July 31, 2003 10:49 AM

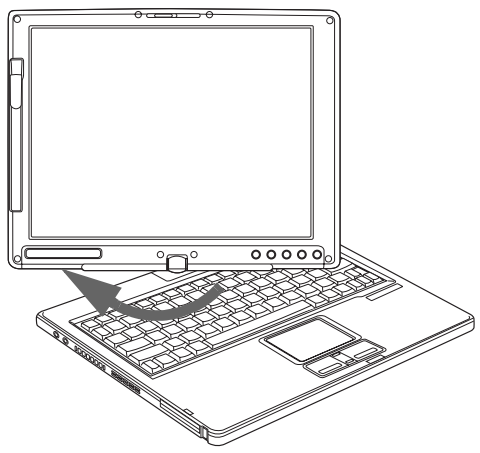

Figure 2-14. Rotating the display

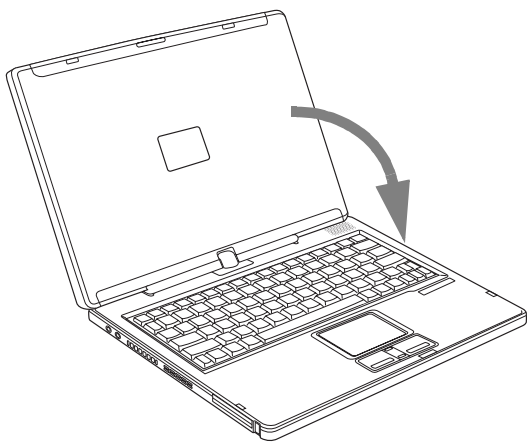

Figure 2-15. Display rotated completely

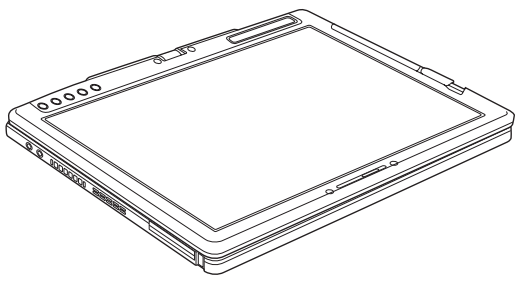

Figure 2-16. System in tablet configuration

ADJUSTING DISPLAY PANEL BRIGHTNESS

Once you have turned on your Tablet PC, you may want to adjust the brightness level of the screen to a more comfortable viewing level. There are two ways to adjust the brightness, keyboard and power management utility.

Using Keyboard to Adjust Brightness

Adjusting the brightness using the keyboard changes the system setting (i.e., the settings you make via the function keys automatically changes the brightness settings in the system's Pen and Tablet Settings).

- [Fn+F6]: Pressing repeatedly will lower the brightness of your display.
- [Fn+F7]: Pressing repeatedly will increase the brightness of the display.

Using Power Management to Adjust Brightness

To adjust brightness with the power management utility, click Start -> Control Panel -> Tablet and Pen Settings. Select the Display tab and set the screen brightness slider for battery and AC power scenarios.

Using the Fujitsu Menu to Adjust Brightness

To adjust brightness using the Fujitsu menu, click on the Fujitsu Menu icon in the system tray in the lower right corner of the screen. From the menu that appears, select Brightness Control. The Tablet and Pen Settings window will open. Select the Display tab and set the screen brightness slider for battery and AC power scenarios.

If using AC power your brightness setting is set to its highest level by default. If using battery power your brightness settings is set to approximately mid-level by default.

The higher the brightness level, the more power the LifeBook T Series Tablet PC will consume and the faster your batteries will discharge. For maximum battery life, make sure that the brightness is set as low as possible.

T Series.book Page 19 Thursday, July 31, 2003 10:49 AM

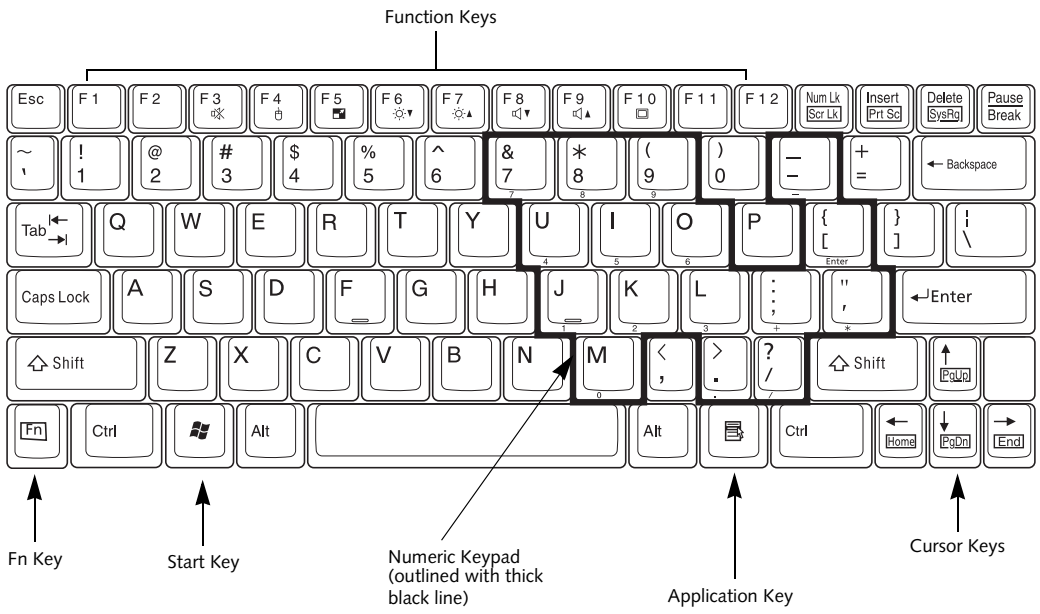

Figure 2-17. Keyboard

Keyboard

USING THE KEYBOARD

Your LifeBook T Series Tablet PC has an integral 83-key keyboard. The keys perform all the standard functions of a 101-key keyboard, including the Windows keys and other special function keys. This section describes the following keys. *(Figure 2-17)*

- Numeric keypad: Your Tablet PC allows certain keys to serve dual purposes, both as standard characters and as numeric and mathematical keys. The ability to toggle between the standard character and numerical keys is controlled through the [NumLk] key.
- Cursor keys: Your keyboard contains four arrow keys for moving the cursor or insertion point to the right, left, up, or down within windows, applications and documents.
- Function keys: The keys labeled [F1] through [F12], are used in conjunction with the [Fn] key to produce special actions that vary depending on what program is running.
- Windows keys: These keys work with your Windows operating system and function the same as the onscreen Start menu button, or the right button on your pointing device.

NUMERIC KEYPAD

Certain keys on the keyboard perform dual functions as both standard character keys and numeric keypad keys. NumLk can be activated by pressing the [NumLk] key. Turning off the NumLk feature is done the same way. Once this feature is activated you can enter numerals 0 through 9, perform addition (+), subtraction (-), multiplication (*), or division (/), and enter decimal points (.) using the keys designated as ten-key function keys. The keys in the numeric keypad are marked on the front edge of the key to indicate their secondary functions. *(Figure 2-17)*

If you are using the optional external numerical keypad, pressing the [NumLk] key will activate the external keypad. The indicator will come on, however it will not change any of the functionality of your keyboard keys.

WINDOWS KEYS

Your LifeBook T Series Tablet PC has two Windows keys: a Start key and an Application key. The Start key displays the Start menu. This button functions the same as your onscreen Start menu button. The Application key functions the same as your right mouse button and displays shortcut menus for the selected item. (Please refer to your Windows documentation for additional information regarding the Windows keys.) *(Figure 2-17)*

T Series.book Page 20 Thursday, July 31, 2003 10:49 AM

CURSOR KEYS

The cursor keys are the four arrow keys on the keyboard which allow you to move the cursor up, down, left, and right in applications. In programs such as Windows Explorer, it moves the "focus" (selects the next item up, down, left, or right). *(Figure 2-17)*

FUNCTION KEYS

Your Tablet PC has 12 function keys, F1 through F12. The functions assigned to these keys differ for each application. You should refer to your software documentation to find out how these keys are used. *(Figure 2-17)*

[Fn] Key

The [Fn] key provides extended functions for the Tablet PC and is always used in conjunction with another key.

- [Fn+F3]: Pressing [F3] while holding [Fn] will toggle the Audio Mute on and off.
- [Fn+F4]: Pressing [F4] while holding [Fn] will toggle the built-in pointing device on and off. Note that the [Fn+F4] combination only works if Manual Setting is selected in the BIOS. (See "Entering the BIOS Setup Utility" on page 34)
- [Fn +F5]: Pressing [F5] while holding [Fn] allows you to toggle between video compensation and no compensation. (Video compensation controls spacing on the display. When it is enabled, displays with less than 1024 x 768 or 800 x 600 pixel resolution will still cover the entire screen.)
- [Fn+F6]: Pressing [F6] repeatedly while holding [Fn] will lower the brightness of your display. Note that adjusting the brightness using the keyboard changes the system setting.
- [Fn+F7]: Pressing [F7] repeatedly while holding [Fn] will increase the brightness of the display.
- [Fn+F8]: Pressing [F8] repeatedly while holding [Fn] will decrease the volume of your Tablet PC.
- [Fn+F9]: Pressing [F9] repeatedly while holding [Fn] will increase the volume of your Tablet PC.
- [Fn+F10]: Pressing [F10] while holding [Fn] allows you to change your selection of where to send your display video. Each time you press the combination of keys you will step to the next choice. The choices, in order, are: built-in display panel only, both built-in display panel, and external monitor or external monitor only.

T Series.book Page 21 Thursday, July 31, 2003 10:49 AM

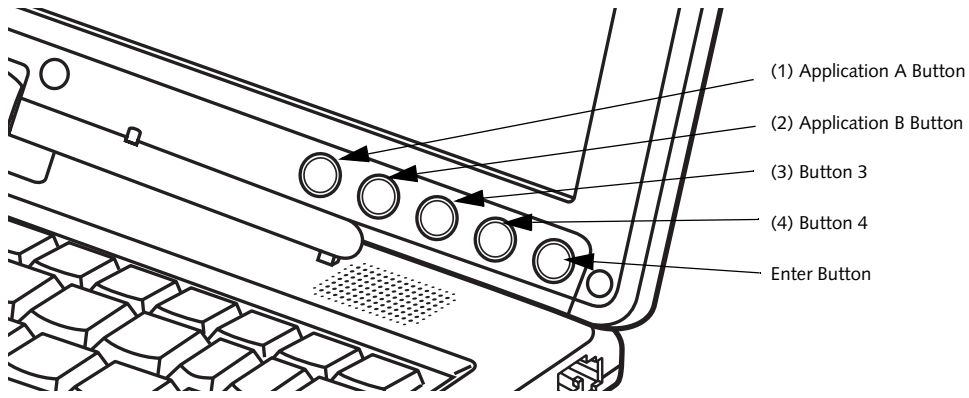

Figure 2-18. LifeBook T Series Tablet PC Security/Tablet PC Buttons

LifeBook Security/ Tablet PC Buttons

A unique feature of your LifeBook T Series Tablet PC is the array of Security and Tablet PC buttons. These buttons allow you to secure your Tablet PC from unauthorized use and to launch specific applications with the touch of a button.

If the security system is activated, upon starting your Tablet PC or resuming from Standby, Hibernate, or shutdown mode the security system will require you to enter a password code using the security buttons. After you enter the correct password, your Tablet PC will resume operation.

The five security/Tablet PC buttons are located on the bottom right-hand side of the display when it is configured to be used as a notebook. *(Figure 2-18)*

Security functions: All five buttons are used when implementing security functions. Four of the buttons are used to enter the password, and the fifth is used as an Enter button. See the right-hand column of Table 2-3.

Tablet PC functions: All five of the buttons have primary functions. Four of the buttons have secondary functions when used as application buttons. The secondary functions are activated by pressing the Function (Fn) button while pressing the application button. See Table 2-3 for specific functions. The secondary functions of the Application A and B buttons can be changed to launch any application. See "Changing Tablet PC Button Functions" on page 22

When the system is logging on or when it is locked (i.e., when you have the Logon or Computer Locked window showing on your desktop), the A and B buttons act as [Tab] and [Enter] keys, respectively.

Button Icon	Primary Function	Secondary Function (Fn + Button)	Security Panel Function (Pre-boot and resuming from suspend)
↓	Page Down	User-defined Application A (Default = Calculator)	Security Button 1
↑	Page Up	User-Defined Application B (Default = MS Journal)	Security Button 2
	Screen Rotation	VGA-Out	Security Button 3
Fn	Secondary Function Selection	Fujitsu Menu Utility	Security Button 4
Alt	Ctl+Alt+Del Button	None	Security Enter Button

Table 2-3. Security/Tablet PC Button Functions

T Series.book Page 22 Thursday, July 31, 2003 10:49 AM

Page Down / Application A Button

When you press the **Page Down** button when the system is running, each press of the button will scroll the screen down one frame. This allows you to navigate quickly through large documents.

When you press the **Fn** button while you press then release the **Page Down/Application A** button, you will automatically start whichever program is assigned to the button. The default application for this button is Calculator.

See "Changing Tablet PC Button Functions" on page 22 to select a different application for this button.

Page Up / Application B Button

When you press the **Page Up** button when the system is running, each press of the button will scroll the screen up one frame. This allows you to navigate quickly through large documents.

When you press the **Fn** button while you press then release the **Page Up/Application A** button, you will automatically start whichever program is assigned to the button. The default application for this button is Microsoft Journal.

See "Changing Tablet PC Button Functions" on page 22 to select a different application for this button.

Screen Rotation / VGA-Out Button

The screen rotation feature would normally be used only when the system is configured as a tablet. When you would like to use the tablet as an eBook, for example, you would use the portrait orientation; when accessing spreadsheets or using the system as a notebook, you would more typically use landscape orientation.

When the system is changed to tablet configuration, the orientation automatically changes to portrait mode by default.

> The screen orientation default can be changed by going to the Control Panel and double-clicking on the Fujitsu Display Control icon and selecting the desired defaults from the Display Orientation section. After changing the defaults, click [OK].

When you press the **Screen Rotation / VGA-Out** button, the system screen orientation changes from portrait (vertical) to landscape (horizontal) or from landscape to portrait.

Function / Fujitsu Menu Utility Button

The **Function** button works in conjunction with the other application buttons to provide additional functionality for the buttons. Refer to specific details above.

Pressing the **Fn** button twice in succession causes the Fujitsu Menu Utility to appear on your screen, allowing you to modify certain system settings.

Ctl+Alt+Del Button

Pressing and holding the **Ctl-Alt-Del** button for up to 750 msecs launches the Logon screen or the Windows Task Manager (if the system hasn't yet been configured).

CHANGING TABLET PC BUTTON FUNCTIONS

The Application A and B buttons can be changed to launch a program or perform an action you select. By default, the Application A button launches the Calculator, and the Application B button launches MS Journal.

To launch different applications or cause the Application A or B buttons to perform a specific action:

1. Double-click on the Tablet and Pen Settings icon in the Control Panel.
2. Select the Tablet Buttons tab and select the button you would like to change from the list.
3. Click [Change] and open the drop down list in the Action: field.
4. Select the action you would like the button to perform. If you want to launch a program, click on Launch an Application then browse to the location of the program.
5. Click [OK], then click [OK] again. The buttons will now perform the actions you have assigned to them.

SETTING UP LIFEBOOK SECURITY PANEL

When you receive your Tablet PC, the security panel application is pre-installed without any passwords. The following sections provide detailed information on your security panel, how to set, change or remove passwords.

Numbered Buttons

Use these buttons to enter your password.*(Figure 2-18)*

Enter Button

After entering the button strokes, push this button to enter the password into the Tablet PC. *(Figure 2-18)*

PASSWORDS

The user and supervisor password may be set on this Tablet PC. A supervisor password is typically the same for all Tablet PC's and notebooks in a work group, office, or company to allow for system management. Individual computers in a group environment should not use a common password. A password consists of one to five button strokes plus the enter button. A valid stroke consists of pushing one or up to four buttons simultaneously.

T Series.book Page 23 Thursday, July 31, 2003 10:49 AM

The following are valid button strokes:

- Pushing [4] by itself
- Pushing [2] and [3] at the same time
- Pushing [1], [2], and [4] at the same time
- Pushing [1], [2], [3], and [4] at the same time

The following are valid passwords. The numbers within braces ({ }) are button strokes using more than one button.

- {[2]+[3]}, [1], [Enter]
- [4], [enter]
- {[1]+[3]}, {[2]+[3]+[4]}, [1], [4], [2], [Enter]

Setting Passwords

When shipped from the factory, no passwords are set. You have a choice of having no password or setting a supervisor and user password. You must set the supervisor password before the user password.

- The purpose of supervisor password is to be able to bypass the user password in case the user password is forgotten. The supervisor password alone will not lock the system.
- You must set the supervisor **and** user passwords for the security panel to work.

Setting Supervisor Password

You must have set a supervisor password before setting any user passwords. The supervisor password can bypass the user password.

1. Go to the **Start** menu.
2. Click on **Run**.
3. Type in: `C:\Program Files\Fujitsu\Security Panel Application\Supervisor\FJSECS.EXE`, then press [Enter]
4. Follow the on-screen instructions to set the Supervisor password.

Setting User Password

1 Go to the **Start** menu.
2. Click on **All Programs**.
3. Click on **Security Panel Application** -> **Security Panel Application**.
4. Follow the on-screen instructions to set the user password.

You may change or remove the supervisor or user password by repeating the steps defined above.

USING YOUR LIFEBOOK SECURITY PANEL

The security lock feature is in effect both when the system resumes from Off, Standby, or Hibernation state. You always need to push the Security Panel buttons to input the user password. Your system will not begin the boot sequence until you enter your supervisor/user password.

From Off State

1. Turn on your system.
2. When the Security Indicator flashes, enter the password and press Enter button.

   For example, if the password is 22222, first press Button 2 five times and press the Enter button. The Tablet PC will boot to normal operation.

From Standby/Hibernation State

1. Press your Suspend/Resume button.
2. When the Security Indicator flashes, enter the password and press Enter button.

   The Tablet PC should resume normal operation.

Incorrect Password Entry

If an invalid supervisor or user password is entered three times in succession, the system will "beep" for about one minute. If a valid password is entered within a minute (while system beeps), the beeping will stop and the Tablet PC will resume normal operation. If no password is entered or an invalid password is entered while the system beeps, the system will return to its previous locked state (standby or off) and the Security Indicator will go off. To reactivate the Tablet PC after a password failure, you must press the Suspend/Resume button, then enter a correct password.

Remember the user password you specified on the Security Panel Application. If you forget the password you will not be able to use your computer. The supervisor password can override the user password.

PRECAUTIONS

Opening and Closing the Cover

By default, closing the cover automatically places your system into Standby mode. (You can change the action the system takes when the cover is closed by opening the Power Options Properties icon in the Control Panel, and selecting the Advanced tab. Make a choice from the drop down menu for "When I close the lid of my portable computer:" and click the [OK] button.) Opening the cover does not automatically place the Tablet PC into normal operation. Instead, you must enter the proper security password after pushing the Suspend/Resume button.

T Series.book Page 24 Thursday, July 31, 2003 10:49 AM

Low Battery Operations

If your Tablet PC has a low battery, pushing the suspend/resume button only turns on the Security Indicator. Your Tablet PC does not unlock, the Security Indicator turns off after one minute. To resume normal operation, first attach a power supply to the Tablet PC. Then you may unlock the Tablet PC.

UNINSTALLING THE SECURITY PANEL APPLICATION

You have two options when uninstalling the security panel application:

- Remove passwords and uninstall the security panel application software. This will disable all security features.
- Uninstall the security panel application with password still active. This will not allow any changes to the password.

Uninstalling the Security Panel Application Software

Remove passwords when User wants no password protection whatsoever and doesn't want to give anybody the utility to set a password on their computer. In this case, if passwords (supervisor, user, or both) are set, the passwords must first be cleared BEFORE removing the application. To clear passwords, follow same procedure in SETTING PASSWORD CODES except this time, select REMOVE, enter current password then click **Next**. When asked to confirm select **Yes**.

Removing Security Panel Application with Passwords Still Active

Using this feature will not allow any changes to the password.

> Removing the applications does not remove the password. It simply removes the utility to change/add/remove passwords. To change your password you must reinstall the application.

User:

1. Go to Start -> Control Panel.
2. Open **Add or Remove Programs Properties** in the Control Panel.
3. Select the **Security Panel Application** in the list, and click **Change/Remove**.
4. When the Confirm File Deletion box appears, click **Yes**.

Supervisor:

1. Go to Start -> Control Panel.
2. Open **Add or Remove Programs Properties** in the Control Panel.
3. Select the **Security Panel Application for Supervisor** in the list, and click **Change/Remove**.
4. When the Confirm File Deletion box appears, click **Yes**.

Reinstalling the Security Panel Application

To reinstall supervisor or user security application, you will need your Drivers and Applications CD. The **Utilities\Security Panel Application** folder contains two separate folders: **Supervisor** and **User**. The setup files for supervisor and user security applications are contained in those folders.

1. Go to the **Utilities\Security Panel Application\Supervisor** folder on the CD and double-click the **setup.exe** file. The Installing Security Panel Application window will appear. Follow the instructions on the screen.
2. Go to the **Utilities\Security Panel Application\User** folder on the CD and double-click the **setup.exe** file. The Installing Security Panel Application window will appear. Follow the instructions on the screen.

Supervisor and user passwords can be set via Windows software using the FJSECS.exe and FJSECU.exe files, respectively. FJSECU.exe for the user password cannot run without first setting a supervisor password. You need to run FJSECS.exe first to set the supervisor password. Follow instructions under Setting Passwords on page 23.

If you forget both passwords, please contact Fujitsu PC Corporation Service and Support at 1-800-8FUJITSU (1-800-838-5487). Fujitsu PC Corporation charges a service fee for unlocking a password-restricted Tablet PC. When calling please have a valid credit card and provide proof of ownership. You will then be given instructions on where to ship your Tablet PC.

T Series.book Page 25 Thursday, July 31, 2003 10:49 AM

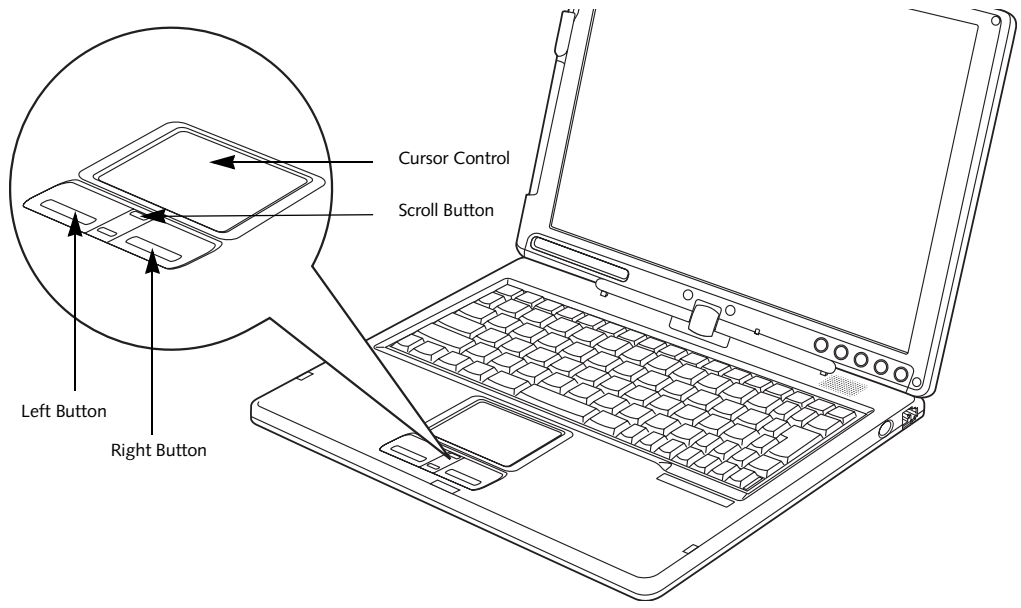

Figure 2-19. Touchpad pointing device

Touchpad Pointing Device

The Touchpad pointing device built into your Tablet PC is used to control the movement of the cursor to select items on your display panel. The Touchpad is composed of a cursor control, left and right buttons, and a scroll button. The cursor control works the same way a mouse does, and moves the cursor around the display. It only requires light pressure with the tip of your finger. The left and right buttons function the same as left and right mouse buttons. The scroll button allows you to navigate through pages quickly without using the scroll bars. The actual functionality of the buttons may vary depending on the application that is being used. *(Figure 2-19)*

CLICKING

Clicking means pushing and releasing a button. To left-click, move the cursor to the item you wish to select, press the left button once, and then immediately release it. To right-click, move the cursor to the item you wish to select, press the right button once, and then immediately release it. *(Figure 2-20)*

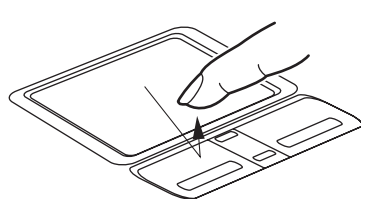

Figure 2-20. Clicking

DOUBLE-CLICKING

Double-clicking means pushing and releasing the left button twice in rapid succession. This procedure does not function with the right button. To double-click, move the cursor to the item you wish to select, press and release the left button twice. *(Figure 2-21)*

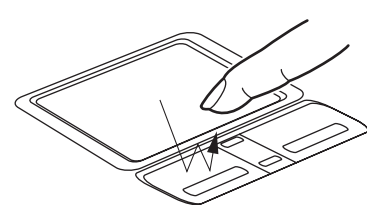

Figure 2-21. Double-clicking

- If the interval between clicks is too long, the double-click will not be executed.
- Parameters for the Touchpad can be adjusted from the Mouse dialog box located in the Windows Control Panel.

T Series.book Page 26 Thursday, July 31, 2003 10:49 AM

DRAGGING

Dragging means pressing and holding the left button while moving the cursor. To drag, move the cursor to the item you wish to move. Press and hold the left button while moving the item to its new location and then release it. *(Figure 2-22)*

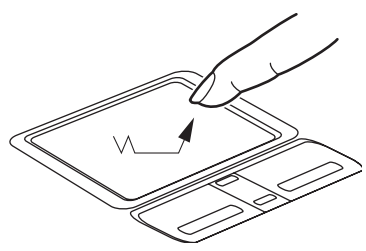

Figure 2-22. Dragging

SCROLLING

Using the scroll button allows you to navigate through a document quickly without having to use the scroll bars. This is particularly useful when you are navigating through online pages. To use the scroll button, press the raised horizontal line at the top or bottom of the button to scroll up or down a page. When you have reached the desired section of the page, release the button. *(Figure 2-23)*

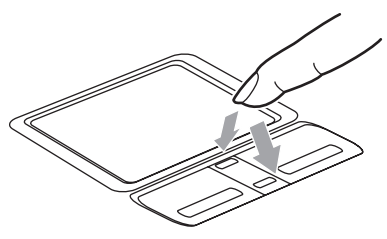

Figure 2-23. Scrolling

TOUCHPAD CONTROL ADJUSTMENT

The Windows Control Panel allows you to customize your Touchpad with selections made from within the Mouse Properties dialog box. There are several aspects of Touchpad operation, which you can adjust.

To access the Mouse Properties window, open the Control Panel and double-click the Mouse icon. In the window that appears, you will see a variety of different mouse functions that you can change.

T Series.book Page 27 Thursday, July 31, 2003 10:49 AM

Pen and Active Digitizer

USING THE PEN

You can use the LifeBook T Series Tablet PC pen to generate and create electronic “ink”, to select items, and to navigate through programs on the Tablet PC. Programs that support handwriting recognition also allow you to write characters directly on the screen with the pen. You can also use the pen as a drawing tool.

You are advised to use a screen protector on your system display to minimize the chance of its being scratched. Screen protectors are available from the Fujitsu Web site at www.fujitsupc.com.

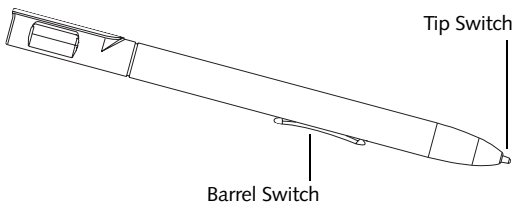

Figure 2-24. LifeBook T Series Pen

The LifeBook T Series Tablet PC pen is a high-quality electronic instrument that can be damaged if used improperly. Treat the pen as you would any precision device. Observe the following guidelines:

- Do not gesture with the pen, use it as a pointer, or tap it on surfaces other than the Tablet PC screen.
- Do not try to turn the thumb grip on the pen; it is designed for inserting and removing the pen from the pen holder.
- Never store the pen with the tip bearing the weight of the pen (e.g., sitting tip down in a pencil cup). Storing the pen tip down could distort the internal mechanism over a period of time (especially in higher temperatures), causing the tip to act as if it is always depressed. The pen should be stored in the pen holder when not in use.

The screen reacts when the pen tip is approximately 1/8 inch (3-5 mm) from the screen. The pen has three switches: a tip switch and a barrel button toggle switch with switches at both ends. By default, the tip switch corresponds to the left mouse button, and the front toggle (closest to the pen tip) barrel button switch corresponds to the right mouse button (when used in combination with the tip switch). The rear toggle of the barrel button switch acts as an electronic ink "eraser".

The functions of the rear toggle and the tip click pressure can be changed by clicking [Start] -> Control Pane, and double-clicking the Fujitsu Pen Settings icon.

To change the rear toggle function, select the drop-down list to select a new function, then click [Apply]. If you don’t want the rear toggle to have any function, select Ignore from the list.

Adjusting the click pressure determines how much pressure must be put on the pen tip in order for the screen to react. The softer it is set, less pressure is required; the harder it is set, more pressure is required. To change the click pressure, use the slider bar to make the click pressure harder or softer, then click [Apply].

Use **only** the pen provided with your Tablet PC. Do not use substitutes that were not designed for the LifeBook T Series Tablet PC.

Here are some hints that may help you use the pen more effectively:

- **To activate the tip switch,** tap or hold the pen tip against the screen.
- **To activate the barrel button switch,** press and hold the end of the button you wish to use (front toggle is the right mouse button switch; the rear toggle acts as an electronic “eraser”).
- **To move the cursor,** hold the pen tip within 1/8 inch (3 - 5 mm) from the screen and move the pen.
- **To start a program,** double-tap the pen tip (tap the pen tip twice rapidly) on the program icon as you would double-click a mouse.
- **To select an object,** tap the pen tip on the object once.
- **To double-click an object,** quickly tap the object twice.

CALIBRATING THE PEN

In order to ensure accurate tracking between the pen and cursor, you must run the Touch Screen Calibration Utility before you use the active digitizer for the first time, or after you change the display resolution.

To run the calibration utility:

1. Go to **Start** -> **Control Panel** and double-click on the **Tablet and Pen Settings** icon.
2. Click **Calibrate**.
3. Adjust the display of your Tablet PC to a comfortable angle.

T Series.book Page 28 Thursday, July 31, 2003 10:49 AM

4. Using the pen, firmly touch the screen directly on the (+) symbol; the (+) symbol will move to the next location.
5. Repeat step 4 in the four corners, then click **OK**.

REPLACING THE PEN TIP

With use, the pen tip may become worn or may pick up foreign particles that can scratch the screen. A damaged or worn tip may not move freely, causing unpredictable results when using the pen. If your pen exhibits these problems, you should replace the pen tip. To do so, use the pen tip removal tool included with your pen.

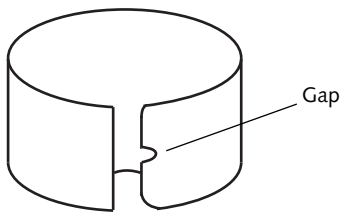

Figure 2-25. Tip Removal Tool

To remove the tip, position the tip in the gap between the two ends of the tool *(Figure 2-25)*. Pinch the tool together so the tip is firmly clasped, then pull it from the barrel. If the tip is worn or damaged, discard it.

To replace the tip, retrieve one of the new tips that accompanied your pen. Insert the flat end of the tip into the barrel and push it in firmly until it is seated.

If you need more tips, they can be ordered from the Fujitsu Web site at: www.fujitsupc.com.

USING THE ACTIVE DIGITIZER

The integrated active digitizer allows you to use the included pen as a pointing device. You can use the pen to click, double-click, drag items and icons, or to draw like a pen or pencil in applications that support this behavior, such as drawing or painting programs. See the documentation that came with your application for details. *(Figure 2-26)*

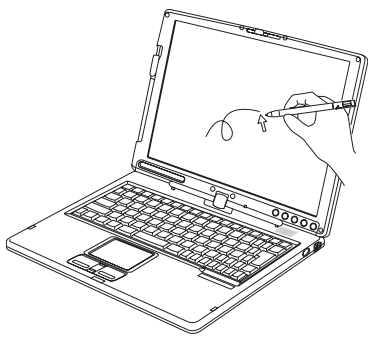

Figure 2-26. Using the pen with the screen

To avoid potential scratching and damage, never use anything but the included pen with the display.

To purchase additional or replacement pens, visit the Fujitsu accessories Web site at: http://www.fujitsupc.com.

Clicking

To left-click, touch the object you wish to select and then lift the pen tip immediately. *(Figure 2-27)*

To right-click, press the front button on the barrel switch or touch the pen to the screen for a couple of seconds until the right mouse icon appears at the tip.

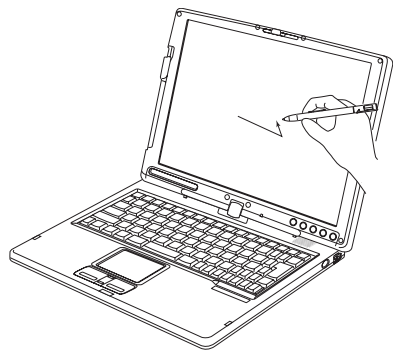

Figure 2-27. Clicking the screen

Double-Clicking

To double-click, touch the item twice, and then immediately remove the pen tip. *(Figure 2-28)*

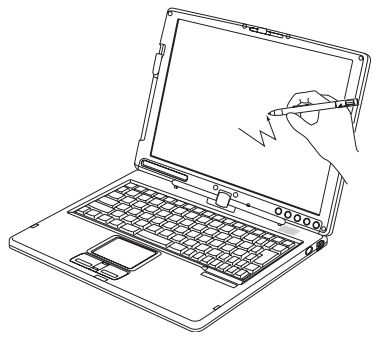

Figure 2-28. Double-clicking the screen

- If the interval between taps is too long, the double-click will not be executed.
- Parameters for the screen can be adjusted from the Mouse Properties dialog box located in the Windows Control Panel.

T Series.book Page 29 Thursday, July 31, 2003 10:49 AM

Volume Control

Your Fujitsu Tablet PC has multiple volume controls which interact with each other.

Any software that contains audio files will also contain a volume control of its own. If you install an external audio device that has an independent volume control, the hardware volume control and the software volume control will interact with each other. It should be noted that if you set your software volume to Off, you will override the external volume control setting.

CONTROLLING THE VOLUME

The volume can be controlled in several different ways:

- Volume can be set from within the Volume Control on the Taskbar.
- Volume can be controlled with the [F8] and [F9] functions keys. Pressing [F8] repeatedly while holding [Fn] will decrease the volume of your Tablet PC. Pressing [F9] repeatedly while holding [Fn] will increase the volume of your Tablet PC.

There are twenty-six levels through which the function keys cycle.

- Volume can be controlled by many volume controls that are set within individual applications.
- Certain external audio devices you might connect to your system may have hardware volume controls.
- Each source discussed above puts an upper limit on the volume level that must then be followed by the other sources.

We recommend that you experiment with the various volume controls to discover the optimal sound level.

T Series.book Page 30 Thursday, July 31, 2003 10:49 AM

3
Using Your Tablet PC

T Series.book Page 32 Thursday, July 31, 2003 10:49 AM

T Series.book Page 33 Thursday, July 31, 2003 10:49 AM

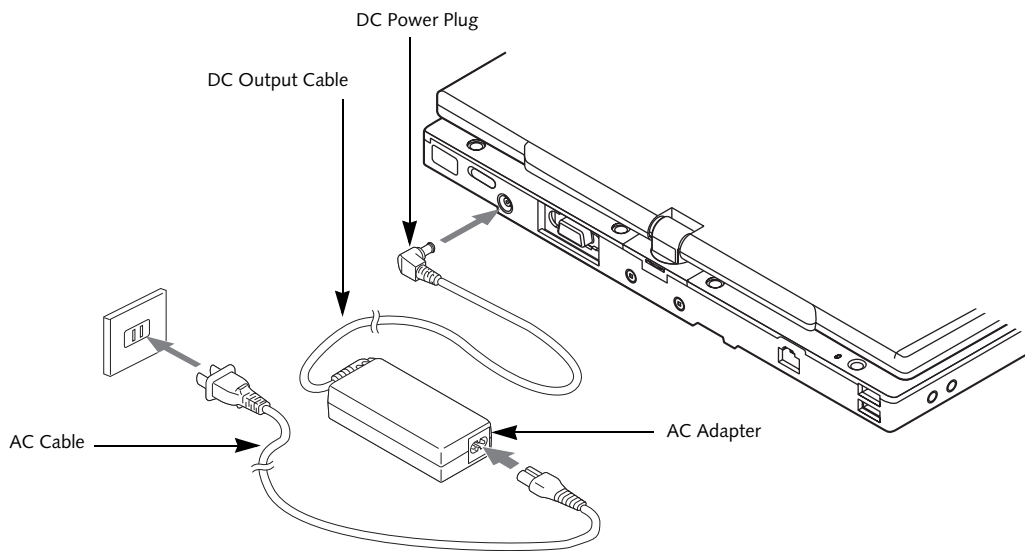

Figure 3-1. Connecting the AC Adapter

Power Sources

Your LifeBook T Series Tablet PC has three possible power sources: a primary Lithium ion battery, an AC adapter or an optional Auto/Airline adapter.

CONNECTING THE POWER ADAPTERS

The AC adapter or optional Auto/Airline adapter provides power for operating your Tablet PC and charging the battery.

Connecting the AC Adapter

1. Plug the DC output cable into the DC power jack of your Tablet PC.
2. Plug the AC adapter into an AC electrical outlet. *(Figure 3-1)*

Connecting the Optional Auto/Airline Adapter

1. Plug the DC output cable into the DC power jack on your Tablet PC.
2. Plug the Auto/Airline adapter into the cigarette lighter of an automobile with the ignition key in the On or Accessories position.

   OR
3. Plug the Auto/Airline adapter into the DC power jack on an airplane seat.

Switching from AC Adapter Power or the Auto/Airline Adapter to Battery Power

1. Be sure that you have a charged battery installed.
2. Remove the AC adapter or the Auto/Airline adapter.

The Lithium ion battery is not charged upon purchase. Initially, you will need to connect either the AC adapter or the Auto/Airline adapter to use your Tablet PC.

T Series.book Page 34 Thursday, July 31, 2003 10:49 AM

Starting Your Tablet PC

POWER ON

The Suspend/Resume button is used to turn on your LifeBook T Series Tablet PC from its off state. Once you have connected your AC adapter or charged the internal Lithium ion battery, you can power on your Tablet PC. *(See figure 2-6 on page 12 for location)*

When you turn on your Tablet PC be sure you have a power source. This means that a battery is installed and charged, or that the AC or Auto/Airline adapter is connected and has power.

Press the Suspend/Resume button to start your system. When you are done working you can either leave your Tablet PC in Standby mode, See "Standby Mode" on page 36, or you can turn it off. See "Power Off" on page 38

When you Power On your Tablet PC, it will perform a Power On Self Test (POST) to check the internal parts and configuration for correct functionality. If a fault is found, your Tablet PC will emit an audio warning and/or an error message will be displayed. See "Power On Self Test Messages" on page 61 Depending on the nature of the problem, you may be able to continue by starting the operating system or by entering the BIOS setup utility and revising the settings.

After satisfactory completion of the Power On Self Test (POST), your Tablet PC will load your operating system.

Never turn off your Tablet PC during the Power On Self Test (POST) or it will cause an error message to be displayed when you turn your Tablet PC on the next time. *See "Power On Self Test Messages" on page 61*

BOOT SEQUENCE

The procedure for starting-up your Tablet PC is termed the Bootup sequence and involves your Tablet PC's BIOS. When your Tablet PC is first turned on, the main system memory is empty, and it needs to find instructions to start up your Tablet PC. This information is in the BIOS program. Each time you power up or restart your Tablet PC, it goes through a boot sequence which displays a Fujitsu logo until your operating system is loaded. During booting, your Tablet PC is performing a standard boot sequence including a Power On Self Test (POST). When the boot sequence is completed without a failure and without a request for the BIOS Setup Utility, the system displays the operating system's opening screen.

The boot sequence is executed when:

- You turn on the power to your Tablet PC.
- You restart your Tablet PC from the Windows Shut Down dialog box.
- The software initiates a system restart. Example: When you install a new application.

BIOS SETUP UTILITY

The BIOS Setup Utility is a program that sets up the operating environment for your Tablet PC. Your BIOS is set at the factory for normal operating conditions, therefore there is no need to set or change the BIOS' environment to operate your Tablet PC.

The BIOS Setup Utility configures:

- Device control feature parameters, such as changing I/O addresses and boot devices.
- System Data Security feature parameters, such as passwords.

Entering the BIOS Setup Utility

To enter the BIOS Setup Utility do the following:

1. Turn on or restart your Tablet PC.
2. Press the [F2] key once the Fujitsu logo appears on the screen. This will open the main menu of the BIOS Setup Utility with the current settings displayed.
3. Press the [RIGHT ARROW] or [LEFT ARROW] key to scroll through the other setup menus to review or alter the current settings.

BIOS Guide

A guide to your Tablet PC's BIOS is available online. Please visit our service and support Web site at **www.fujitsupc.com**. Once there, select Support, then select Tablet PCs under User's Guides. Select LifeBook Tablet PC BIOS Guides from the pull-down menu for your Tablet PC series. If you are unsure of your Tablet PC's BIOS number, refer to your packing slip.

If your data security settings require it, you may be asked for a password before the BIOS main menu will appear.

BOOTING THE SYSTEM

We strongly recommend that you not attach any external devices until you have gone through the initial power-on sequence.

When you turn on your LifeBook T Series Tablet PC for the first time, it will display a Fujitsu logo on the screen.

T Series.book Page 35 Thursday, July 31, 2003 10:49 AM

If you do nothing the system will load the operating system, and then the Windows Welcome will begin.

Designed to accommodate the needs of many users, in many different countries, Windows needs to be configured the first time you use them. Windows has two parts:

- Getting Started: You have the opportunity to set up your modem so that your Tablet PC will be prepared to dial out.
- Windows License Agreement and Final Settings: You have the opportunity to review the Windows License Agreement.

You may click Cancel at any time within this process to shut down Windows. You may restart this process at any time in the future, but you must complete it in order to use your computer.

Getting Started

Read the instructions on the screens carefully and fill in the information as directed. You will be asked for such items as the language you wish to use, the country in which you live, your first and last name, and about how you dial out from where you will be using your Tablet PC. For the modem settings, enter your current location information where you will be using your Tablet PC. If you are not connected to a phone line and plan to register at a later time, you may click the **Skip** button, and you will go directly to the condition of use page.

Once you have set up your Tablet PC to dial out, Windows will make a free telephone call to test the settings. If the call is unsuccessful, you will be returned to the phone settings page where you may try to fix them. If you are unable to fix the settings please contact Fujitsu Service and Support. *See "FPC Contact Information" on page 3* If you would simply like to move on, and register at a later time, you may click the **Skip** button, and you will go directly to the Condition of Use page.

Registration

If your connection is successful, you will go to the Registration Confirmation page. On this page simply enter the requested information, and then check the box at the bottom to register your copy of Windows with Microsoft. Once you have finished, click the **Next** button to continue.

Final Settings

The first part of your final settings is the Windows End User License Agreement. Read the agreement carefully. When you finish reading you must accept or reject the terms of the agreement and then click on the **Next** button.

- If you reject the terms of the license agreement you will be asked to review the license agreement for information on returning Windows or to shut down your Tablet PC.
- You cannot use your Tablet PC until you have accepted the License Agreement. If you stop the process, your Tablet PC will return to the beginning of the Windows Welcome Process, even if you power down your system and start it up again.

ACTIVATING ADDITIONAL UTILITIES

The first time you boot up your system, you will see a Click Me! icon on the system desktop.

When you double-click the Click Me! icon, your system will automatically add appropriate utilities based on your system's configuration.

The ClickMe! icon disappears after it has been run the first time.

REGISTERING YOUR LIFEBOOK T SERIES TABLET PC

What are the benefits of registering?

You will receive an identification label for your Tablet PC, which, if your Tablet PC is ever lost, may help in getting it returned to you. You will also receive technical support access and useful product mailings.

How do I register?

To register your system, visit our Web site at: www.fujitsupc.com/support.

T Series.book Page 36 Thursday, July 31, 2003 10:49 AM

Power Management

Your LifeBook T Series Tablet PC has many options and features for conserving battery power. Some of these features are automatic and need no user intervention, such as those for the internal modem. However, others depend on the parameters you set to best suit your operating conditions, such as those for the display brightness. Internal power management for your Tablet PC may be controlled from settings made in your operating system, pre-bundled power management application, or from settings made in BIOS setup utility.

Besides the options available for conserving battery power, there are also some things that you can do to prevent your Tablet PC battery from running down as quickly. For example, you can create an appropriate power saving profile, put your Tablet PC into Standby mode when it is not performing an operation, and you can limit the use of high power devices. As with all mobile, battery powered computers, there is a trade-off between performance and power savings.

Power Mode	System Activity	Events causing system to enter mode state
Fully On Mode	System is running. CPU, system bus, and all other interfaces operate at full speed.	▪ From Standby mode: System operation resumed (Suspend/Resume button pressed, resume on modem ring, resume on time). ▪ From Hibernation mode: Suspend/Resume button pressed. ▪ From Off mode: Suspend/Resume button pressed.
Standby Mode (Suspend-to-RAM)	Resume system logic remains powered and RAM remains powered to maintain active data. All other devices are turned off.	▪ Standby timeout occurs. ▪ Suspend request issued by software or by pressing the Suspend/Resume button. ▪ Low battery.
Hibernation Mode (Suspend-to-Disk)	Windows saves desktop state (including open files and documents) to hard disk. CPU stops. All other devices are turned off.	▪ Suspend timeout occurs. ▪ Clicking Start -> Shut Down -> Hibernate (It may be necessary to Enable Hibernate Support from Windows Power Options.) ▪ Low battery condition
Power Off	System is fully powered off except for logic components required for Suspend/ Resume button and real-time clock operation.	▪ System shutdown. ▪ Low battery condition

Table 3-1. System Power States

SUSPEND/RESUME BUTTON

When your Tablet PC is active, the Suspend/Resume button can be used to manually put your Tablet PC into Standby mode. Push the Suspend/Resume button when your Tablet PC is active, but not actively accessing anything, and immediately release the button. You will hear two short beeps and your system will enter Standby mode. *(See figure 2-6 on page 12 for location)*.

If your Tablet PC is suspended, pushing the Suspend/ Resume button will return your Tablet PC to active operation. You can tell whether or not your system is in Standby mode by looking at the Power indicator. *See "Power Indicator" on page 15.* If the indicator is visible and not flashing, your Tablet PC is fully operational. If the indicator is both visible and flashing, your Tablet PC is in Standby mode. If the indicator is not visible at all, the power is off or your Tablet PC is in Hibernate mode *(See Hibernate Mode)*

STANDBY MODE

Standby mode in Windows saves the contents of your Tablet PC's system memory during periods of inactivity by maintaining power to critical parts. This mode will turn off the CPU, the display, the hard drive, and all of the other internal components except those necessary to maintain system memory and allow for restarting. Your Tablet PC can be put in Standby mode by:

- Pressing the Suspend/Resume button when your system is turned on.
- Selecting Standby from the Windows Shut Down menu.
- Timing out from lack of activity.
- Allowing the battery to reach the Dead Battery Warning condition.
- Closing the system cover.

Your Tablet PC's system memory typically stores the file(s) on which you are working, open application(s) information, and any other data required to support the operation(s) in progress. When you resume operation

T Series.book Page 37 Thursday, July 31, 2003 10:49 AM

from Standby mode, your Tablet PC will return to the point where it left off. To resume operation, you must use the Suspend/Resume button to resume operation, and there must be an adequate power source available, or your Tablet PC will not resume.

If you are running your Tablet PC on battery power, be aware that the battery continues to discharge while your Tablet PC is in Standby mode, though not as fast as when fully operational.

HIBERNATE MODE

The Hibernate mode saves the contents of your Tablet PC's system memory to the hard drive as a part of the Suspend/Resume mode. Your Tablet PC is pre-configured to perform this function. The Hibernate mode can also be configured through the system BIOS to run in other ways depending on what you need to accomplish. *See "BIOS Setup Utility" on page 34.*

- Standby or Hibernate modes should not be used with certain PC Cards. Check your PC Card documentation for more information.
- Disabling the Suspend/Resume button prevents it from being used to put your Tablet PC in Standby or Hibernate mode. The resume function of the button cannot be disabled.
- If your Tablet PC is actively accessing information when you enter Standby or Hibernate mode, changes to open files are not lost. The files are left open and memory is kept active during Standby mode or the memory is transferred to the hard drive during Hibernate mode.
- When PC Cards or external devices are in use, Save-to-Disk mode cannot return to the exact state prior to suspension, because all peripheral devices will be re-initialized when the system restarts.
- The main advantage of using Hibernate mode is that power is not required to maintain your data. This is very important if you will be leaving your Tablet PC in a suspended state for a prolonged period of time. The drawback of using Hibernate mode is that it lengthens the power down and power up sequences and resets peripheral devices.

Using Hibernate Mode

Hibernate default setting is enabled for Windows XP.

To **enable or disable the Hibernation feature** follow these easy steps:

1. From the **Start** menu, select **Settings**, and then select **Control Panel -> Power Options**.
2. Select **Hibernation,** and then select the box to enable or disable this feature.

To **use Hibernate mode** with Windows XP systems:

1. Click on the **Start** button, click **Shut Down**.
2. Select **Hibernate** option from the "What do you want the computer to do" list.

DISPLAY TIMEOUT

The Video Timeout is one of the power management parameters. This feature saves power by turning off the display if there is no keyboard or pointer activity for the user selected timeout period. Any keyboard or pointer activity will cause the display to restart automatically. This feature is independent of the Suspend/Resume button and can be enabled and disabled in Windows Power Management.

HARD DISK TIMEOUT

The Hard Disk Timeout is another one of the power management parameters. This feature saves power by turning off the hard drive if there is no hard drive activity for the user selected timeout period. Any attempt to access the hard drive will cause it to restart automatically. This feature is independent of the Suspend/Resume button and can be enabled and disabled in Windows.

WINDOWS POWER MANAGEMENT

The Power Options icon located in the Windows Control Panel allows you to configure some of the power management settings. For example, you can use the Power Options to set the timeout values for turning off the display and hard disks whether you are running the Tablet PC on battery power or one of the adapters.

RESTARTING THE SYSTEM

If your system is on and you need to restart it, be sure that you use the following procedure.

1. Click the **Start** button, and then click **Shut Down.**
2. Select the **Restart** option from within the Windows Shut Down dialog box.
3. Click **OK.** Your Tablet PC will shut down and reboot.

T Series.book Page 38 Thursday, July 31, 2003 10:49 AM

Turning off your Tablet PC without exiting Windows or turning on your Tablet PC within 10 seconds of the Tablet PC being shut off may cause an error when you start the next time.

POWER OFF

Before turning off the power by choosing Shut Down from the Windows Start menu, check that the Hard Drive, CD-ROM, PC Card and the Floppy Disk Drive Access indicators are all Off. *(See Figure 2-9 on page 15)* If you turn off the power while accessing a disk or PC Card there is a risk of data loss. To assure that your Tablet PC shuts down without error, use the Windows shut down procedure.

Using the correct procedure to shut down from Windows, allows your Tablet PC to complete its operations and turn off power in the proper sequence to avoid errors. The proper sequence is:

1. Click the **Start** button, and then click **Shut Down**.
2. Select the **Shut Down** option from within the Windows Shut Down dialog box.
3. Click **OK**.

If you are going to store your Tablet PC for a month or more see the Care and Maintenance section.

T Series.book Page 39 Thursday, July 31, 2003 10:49 AM

4

User-Installable Features

T Series.book Page 40 Thursday, July 31, 2003 10:49 AM

T Series.book Page 41 Thursday, July 31, 2003 10:49 AM

Lithium ion Battery

Your LifeBook T Series Tablet PC has a Lithium ion battery that provides power for operating your Tablet PC when no external power source is available. The battery is durable and long lasting, but should not be exposed to extreme temperatures, high voltages, chemicals or other hazards.

The Lithium ion battery operating time may become shorter if it is used under the following conditions:

- When used at temperatures lower than 41° F (5° C) or higher than 95° F (35° C). Extreme temperatures not only reduce charging efficiency, but can also cause battery deterioration. The Charging icon on the Status Indicator panel will flash when you try to charge a battery that is outside its operating temperature range. *See "Battery Charging Indicator" on page 16.*
- When using a high current device such as a modem, CD-ROM drive, or hard drive, using the AC adapter will conserve your battery life.

- Do not leave a faulty battery in your Tablet PC. It may damage your AC adapter, optional Auto/Airline adapter, another battery or your Tablet PC itself. It may also prevent operation of your Tablet PC by draining all available current into the bad battery.
- Under federal, state, or local law it may be illegal to dispose of batteries by putting them in the trash. Please take care of our environment and dispose of batteries properly. Check with your local government authority for details regarding recycling or disposing of old batteries. If you cannot find this information elsewhere, contact your support representative at 1-800-8Fujitsu.

Actual battery life will vary based on screen brightness, applications, features, power management settings, battery condition and other customer preferences. CD-ROM drive or hard drive usage may also have a significant impact on battery life. The battery charging capacity is reduced as the battery ages. If your battery is running low quickly, you should replace it with a new one.

RECHARGING THE BATTERY

If you want to know the condition of the Lithium ion battery, check the Battery Level indicator located on the Status Indicator panel. The indicator changes as the battery level changes.

The Lithium ion battery is recharged internally using the AC adapter or Auto/Airline adapter. To recharge the battery make sure the battery that needs to be charged is installed in your Tablet PC and connect the AC or Auto/Airline adapter.

Make sure that the Battery Charging indicator and the percentage charge is shown inside the Battery Level icon on the Status Indicator Panel.

There is no memory effect on the Lithium ion battery, therefore you do not need to discharge the battery completely before recharging. The charge times will be longer if your Tablet PC is in use while the battery is charging. If you want to charge the battery more quickly, put your Tablet PC into Standby mode, or turn it off while the adapter is charging the battery. *See "Power Management" on page 36.*

Using heavy current devices such as a modem or frequent CD-ROM and PCMCIA powered external device accesses may prevent charging completely.

Low Battery State

When the battery is running low, your Tablet PC will beep every 15 seconds and the Battery Level indicator will flash. If you do not respond to the low battery alarm, the batteries will continue to discharge until they are too low to operate. When this happens there will be a multiple beep alarm and the Battery Level indicator will show a dead battery. Your Tablet PC will then go into Standby mode to try and protect your data for as long as possible. There is no guarantee that your data will not be lost once the Tablet PC reaches this point.

- You may not be able to hear the alarm if the volume control is set too low or is turned off by the hardware or software. However, you will be able to see the Battery Level indicator flash. Once the low battery alarm occurs you must save all your data and put your Tablet PC into Standby mode until you can provide a new power source. You should provide a charged battery or AC or Auto/Airline Adapter as soon as possible.
- When you are in Standby mode there must always be at least one power source active. If you remove all power sources while your Tablet PC is in Standby mode, any data that has not been saved to the hard drive will be lost.

T Series.book Page 42 Thursday, July 31, 2003 10:49 AM

Dead Battery Suspend mode shows on the Status indicator just like the normal Standby mode. Once your Tablet PC goes into Dead Battery Suspend mode you will be unable to resume operation until you provide a source of power either from an adapter, or a charged battery. Once you have provided power, you will need to press the Suspend/Resume button to resume operation. In the Dead Battery Suspend mode, your data can be maintained for some time, but if a power source is not provided promptly, the Power indicator will stop flashing and go out, meaning that you have lost the data that was not stored. Once you provide power, you can continue to use your Tablet PC while an adapter is charging the battery.

Shorted Batteries

The Status Indicator panel uses a symbol inside the battery outline of the Battery Level indicator to display the operating level available in that battery. *(See figure on page 15)* If this display shows a Shorted Battery, it means that the battery is damaged and must be replaced so it does not damage any other parts of your Tablet PC.

REPLACING THE BATTERY

Your LifeBook T Series Tablet PC comes with one battery pack; you might want to consider purchasing a spare. By keeping a spare battery fully charged, you can immediately swap with one that is not charged.

There are two ways to swap batteries: cold-swapping and warm-swapping. Cold-swapping means swapping batteries when the system has been powered down; warm-swapping is performed when the system is in Standby mode.

Cold-swapping batteries

To cold-swap batteries in your battery compartment, follow these easy steps: *(Figure 4-1)*

1. Have a charged battery ready to install.
2. Shut down your notebook and disconnect the AC adapter.
3. Press the battery release latches to open the compartment.
4. Remove the battery from the compartment.
5. Slide the new battery into the compartment.
6. Close the compartment and the battery release latches will click into place.
7. Plug in the AC adapter and turn the power on.

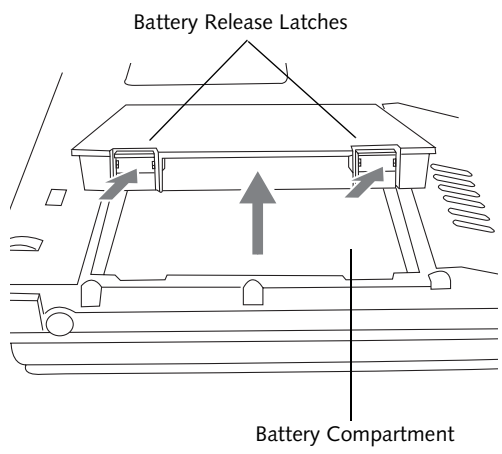

Figure 4-1. Removing the Battery

Warm-swapping Batteries

To warm-swap batteries in your battery compartment follow these easy steps: *(Figure 4-1)*

You have only a few minutes to perform a warm-swapping before the internal bridge battery runs out of power. Have the charged battery nearby when performing a warm battery swap.

1. Close any open files and put your Tablet PC into Standby mode.
2. Press the battery release latches to open the compartment.
3. Remove the battery from the compartment.
4. Slide the new battery into the compartment.
5. Close the compartment and the battery release latches will click into place.
6. Press the Suspend/Resume button to return your Tablet PC to normal operation.

If the Lithium ion battery connector is not fully seated, you may not be able to use your Tablet PC or charge your battery.

T Series.book Page 43 Thursday, July 31, 2003 10:49 AM

Memory Upgrade Module

Your Fujitsu LifeBook T Series Tablet PC comes with a minimum of 256 MB of high speed Double Data Rate Synchronous Dynamic RAM (DDR SDRAM), 266 MHz factory installed. To increase your system's memory capacity, you may install an additional memory upgrade module. The memory upgrade must be a dual-in-line (DIMM) SDRAM module. To ensure 100% compatibility, purchase the SDRAM module only from the Fujitsu web store at www.fujitsupc.com.

- If you are installing a 1 GB memory upgrade module by itself or with a smaller module, it must be installed in slot 1 *(Figure 4-2)*.
- Do not remove any screws from the memory upgrade module compartment except those specifically shown in the directions for installing and removing the module.

INSTALLING MEMORY UPGRADE MODULES

1. Turn off power to your LifeBook Tablet PC and remove any power adapter (AC or auto/airline).
2. Make sure that all the connector covers are closed.
3. Turn the Tablet PC bottom side up, and remove the screws of the memory upgrade module compartment. *(Figure 4-2)*
4. Remove the cover.

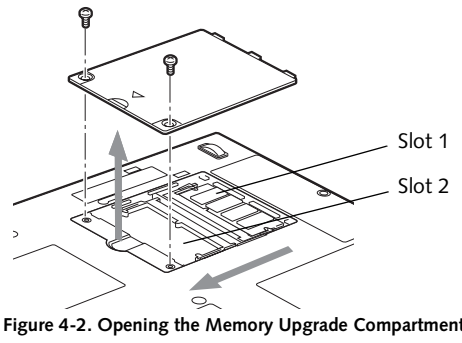

Figure 4-2. Opening the Memory Upgrade Compartment

5. Remove the memory upgrade module from the static guarded sleeve. As noted above, if you are installing a 1 GB memory module by itself or with a smaller module, it must be installed in slot 1.
6. Align the memory upgrade module with the component side up. Align the connector edge of the memory upgrade module with the connector slot in the compartment. *(Figure 4-3)*
7. Insert the memory upgrade module at a 45° angle. Press the connector edge of the module firmly down and into the connector until it lodges under the retaining clip. You will hear a click when it is properly in place.

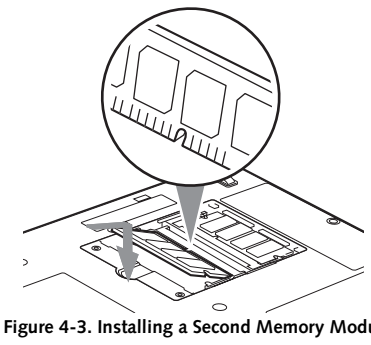

Figure 4-3. Installing a Second Memory Module

8. Replace the cover. *(Figure 4-4)*
9. Replace the screws.

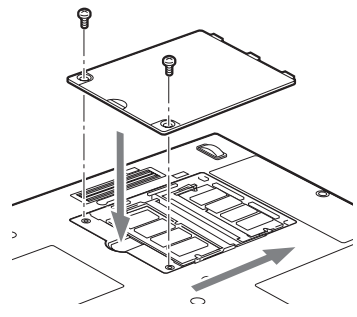

Figure 4-4. Replacing the Memory Compartment Cover

The memory upgrade module is not something you routinely remove from your notebook. Once it is installed, you should leave it in place unless you want to change system memory capacity.

TO REMOVE A MEMORY UPGRADE MODULE

1. Perform steps 1 through 4 of Installing a Memory Upgrade Module.
2. Pull the clips sideways away from each side of the memory upgrade module at the same time.
3. While holding the clips out, remove the module from the slot by lifting it up and pulling towards the rear of your notebook. *(Figure 4-5)*

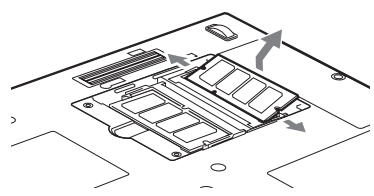

Figure 4-5. Removing a Memory Upgrade Module

T Series.book Page 44 Thursday, July 31, 2003 10:49 AM

4. Store the memory upgrade module in a static guarded sleeve.
5. Replace the cover. *(Figure 4-4)*
6. Replace the screws.

CHECKING THE MEMORY CAPACITY

Once you have changed the system memory capacity by either adding or removing a memory upgrade module, be sure to check that your notebook has recognized the change.

Your Tablet PC uses Dynamic Video Memory Technology (DVMT), which allows the video driver to dynamically determine the amount of memory that is used. Your Tablet PC can use a maximum of 64 MB of system memory for video functions.

You can check the memory capacity by clicking [Start] -> Control Panel, then double-clicking the System icon. Select the General tab and check the amount of memory under "Computer."

The amount of memory displayed should be approximately the total of all memory modules installed. There may be a discrepancy of 8 MB which is allocated for fixed video memory.

If the total memory displayed is incorrect, check that your memory upgrade module is properly installed. *(If the module is properly installed and the capacity is still not correctly recognized, see Troubleshooting on page 54.*

T Series.book Page 45 Thursday, July 31, 2003 10:49 AM

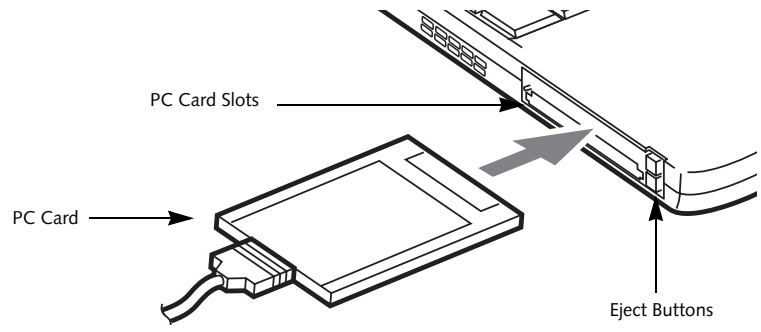

Figure 4-6. Installing/Removing PC Cards

PC Cards

Your LifeBook T Series Tablet PC supports Type I, II, and Type III PC Cards, which can perform a variety of functions.

Some available PC Cards include:

- Fax/data modem cards.
- Local area network (LAN) cards.
- IDE solid-state disk cards.
- SCSI cards.
- Other PC Cards that conform to PCMCIA 2.1 or CardBus standards.
- Optional SmartCard adapter

For further information, refer to the instructions supplied with your PC Card.

INSTALLING PC CARDS

PC Cards are installed in the PC Card slot. To install a PC Card, follow these easy steps: *(Figure 4-6)*

- Installing or removing a PC Card during your Tablet PC's shutdown or bootup process may damage the card and/or your Tablet PC.
- Do not insert a PC Card into a slot if there is water or any other substance on the card as you may permanently damage the card, your Tablet PC, or both.

1. See your PC Card manual for specific instructions on the installation of your card. Some PC Cards may require your Tablet PC to be Off while installing them.
2. Make sure there is no PC Card currently in the slot. If there is, see Removing PC Cards.
3. Insert your PC Card into the slot, with the product label facing up.
4. Push the card into the slot firmly until it is seated in the opening.

REMOVING PC CARDS

To remove a PC Card, follow these easy steps:

1. See your PC Card manual for specific instructions on removing your card. Some PC Cards may require your Tablet PC to be in Standby Mode or Off while removing them.

If the dialog box states that the device can't be removed, you must save all open files, close any open applications and shut down your Tablet PC.

2. Push the Eject button until it pops out, and then push it in to eject the card. This will allow you to remove the card.

If the PC Card has an external connector and cable, do not pull the cable when removing the card.

SMART CARD READER

An embedded Smart Card Reader is provided on your Tablet PC. Smart Cards are the same size and shape as credit cards, but they contain an integrated microprocessor chip. The chip can hold a variety of information, and provides the user with many possible options, such as allowing them to make secure purchases, pay for phone calls, store security information, and provide identification and information.

In order to use the embedded Smart Card Reader, you must purchase an optional Smart Card holder for installation into an available Type II PC Card slot.

T Series.book Page 46 Thursday, July 31, 2003 10:49 AM

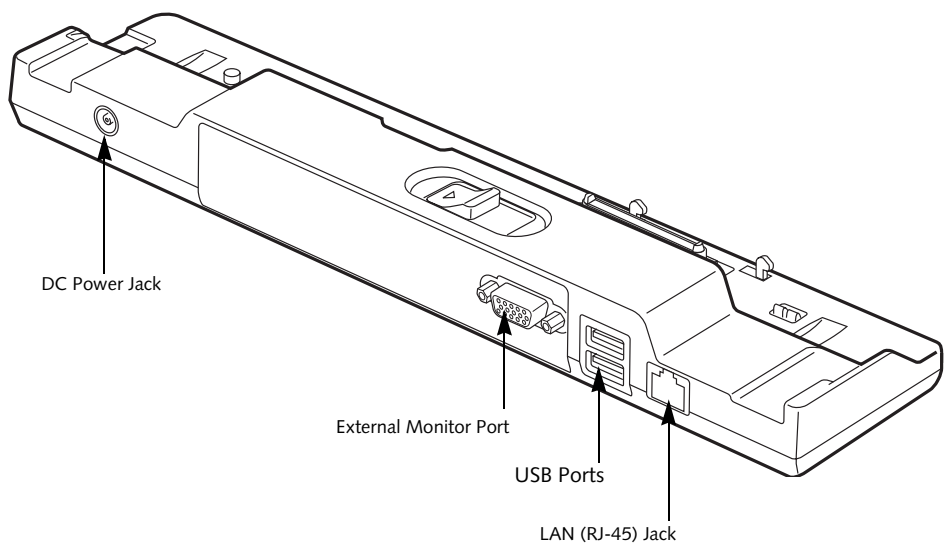

Figure 4-7. Port Replicator rear panel

Port Replicator

An optional Port Replicator is available from Fujitsu to support your LifeBook T Series Tablet PC. The Port Replicator extends the functionality of your Tablet PC by providing ports to connect USB devices, an external monitor, or a LAN device. The Port Replicator connects to the bottom of your Tablet PC. *See "Device Ports" on page 48.*

REAR PANEL COMPONENTS

Following is a brief description of the optional Port Replicator's rear panel components.

External Monitor Port

The external monitor port allows you to connect an external VGA or SVGA monitor. Note that if a Port Replicator is attached, you must use the external monitor port on the Port Replicator. *(Figure 4-7)*

LAN (RJ-45) Jack

The LAN jack allows you to connect a LAN to the Port Replicator. Note that when the system is attached to the Port Replicator, the LAN Jack on the Port Replicator should be used, not the one on the system.

DC Power Jack

The DC power jack allows you to plug in the AC adapter to power your Tablet PC and charge the internal Lithium ion battery.

USB 2.0 Ports

The two USB 2.0 ports allow you to connect USB devices such as game pads, pointing devices, and keyboards. USB 2.0 is downward-compatible with USB 1.1 devices, so older USB devices will work with these ports. USB 2.0 is a much faster design, running 40 times faster than USB 1.1.

T Series.book Page 47 Thursday, July 31, 2003 10:49 AM

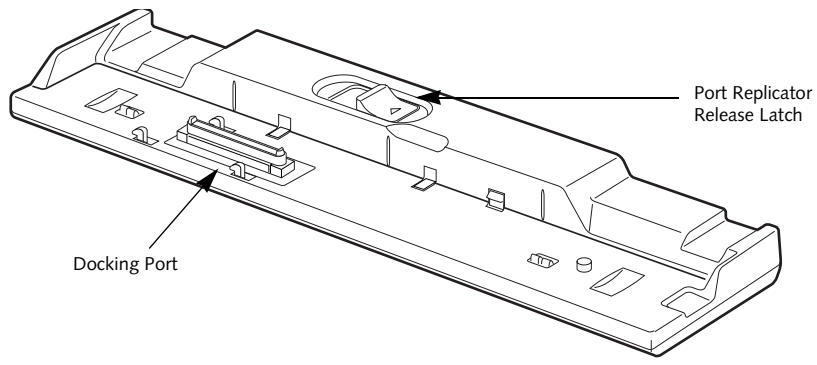

Figure 4-8. Port Replicator front panel

FRONT PANEL COMPONENTS

Following is a brief description of the optional Port Replicator's front panel components

Docking Port

The docking port connects the Port Replicator to your Tablet PC. *(Figure 4-8)*

Port Replicator Release Latch

Slide the Port Replicator Release Latch sideways to remove the Port Replicator from your Tablet PC. *(Figure 4-8)*

ATTACHING THE PORT REPLICATOR

To attach the Port Replicator, align the Port Replicator connector on the bottom of your Tablet PC with the connector on the Port Replicator and push together at the two corners. *(Figure 4-9)*

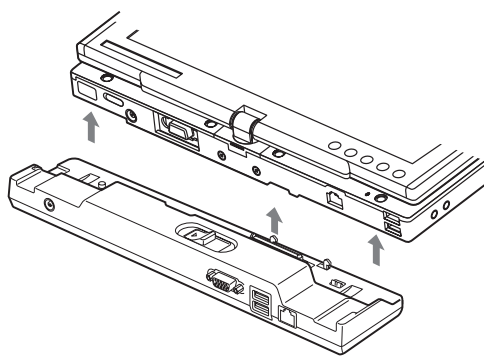

Figure 4-9. Attaching the Port Replicator

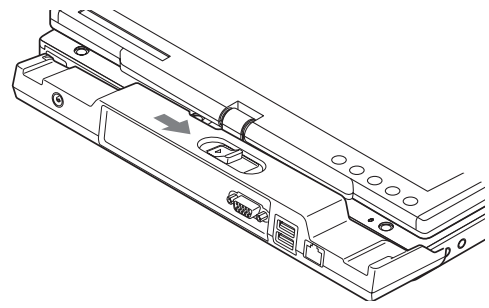

Figure 4-10. Unlatching the Port Replicator

DETACHING THE PORT REPLICATOR

To detach the Port Replicator:

1. Slide the Port Replicator release latch to release the Port Replicator from your Tablet PC. *(Figure 4-10)*
2. Pull away the Port Replicator to detach it from your Tablet PC. *(Figure 4-11)*

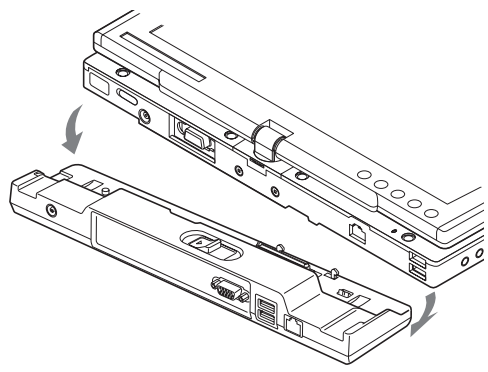

Figure 4-11. Removing the Port Replicator

T Series.book Page 48 Thursday, July 31, 2003 10:49 AM

Device Ports

Your LifeBook T Series Tablet PC and the optional Port Replicator come equipped with multiple Device Ports to which you can connect an external device including: disk drives, keyboards, modems, printers, etc.

MODEM (RJ-11) JACK

The modem (RJ-11) jack is used for an internal modem. To connect the telephone cable follow these easy steps: *(See Figure 2-6 on page 12 for location)*

1. Align the connector with the jack opening.
2. Push the connector into the jack until it is seated.
3. Plug the other end of the telephone cable into a telephone outlet.

The internal modem is not intended for use with Digital PBX systems. Do not connect the internal modem to a Digital PBX as it may cause serious damage to the internal modem or your entire LifeBook T Series Tablet PC. Consult your PBX manufacturer's documentation for details. Some hotels have Digital PBX systems. Be sure to find out BEFORE you connect your modem.

- The internal modem is designed to the ITU V.90 standard. Its maximum speed of 53000 bps is the highest allowed by FCC, and its actual connection rate depends on the line conditions. The maximum speed is 33600 bps at upload.
- The internal modem on all LifeBook T Series Tablet PC's from Fujitsu PC Corporation are certified for use in the United States and Canada.
- Depending upon the configuration of your system, your LifeBook Tablet PC may have either a LAN jack or an IEEE 1394 jack.

INTERNAL LAN (RJ-45) JACK

The internal LAN (RJ-45) jack is used for an internal Fast Ethernet (10/100 Base-T/Tx) connection. You will need to configure your Tablet PC to work with your particular network. (Please refer to your network administrator for information on your network configuration.) To connect the LAN cable follow these easy steps: *(See Figure 2-7 on page 13 for location)*

Note that the optional Port Replicator is designed to cover the LAN jack located on the system. This design ensures that the LAN jack on the Port Replicator is the only one used when the Port Replicator is installed.

1. Align the connector with the jack opening.
2. Push the connector into the jack until it is seated.
3. Plug the other end of the cable into a LAN outlet.

DOCKING PORT

The docking port is used for the connection of your Tablet PC to an optional port replicator. In order to connect your Tablet PC to one of these devices follow the instructions that came with your docking port. *(See Figure 2-8 on page 14 for location)*

UNIVERSAL SERIAL BUS PORTS

The two Universal Serial Bus 2.0 ports (USB) allow you to connect USB devices such as external floppy disk drives, external CD and DVD drives, game pads, pointing devices, keyboards and/or speakers. USB 2.0 is downward-compatible with USB 1.1 devices, so older USB devices will work with these ports. USB 2.0 is a much faster design, running forty times faster than USB 1.1.

In order to connect a USB device, follow these easy steps: *(See Figure 2-7 on page 13 for location)*

1. Align the connector with the port opening.
2. Push the connector into the port until it is seated.

INFRARED PORT

The Infrared IrDA 1.1 (4 Mbps) port allows for wireless data transfer between your Tablet PC and other IrDA-compatible devices, such as another computer or a printer, without the use of a cable. *(See Figure 2-7 on page 13 for location)*

It is important to keep in mind that while carrying out this form of communication, both devices must be placed so their infrared ports are directly facing each other without obstruction. The devices must also be separated by at least 6" but no more than 36" for maximum performance.

The following conditions may interfere with infrared communications:

- A television, radio remote control unit, or a wireless headphone is being used nearby.
- Direct sunlight, fluorescent light, or incandescent light shines directly on the port.

T Series.book Page 49 Thursday, July 31, 2003 10:49 AM

- Do not move either device while communication is active as it may interrupt data transmission.
- Be careful not to scratch the infrared port lens. Scratches, dirt, or other surface marks can degrade operation.

MICROPHONE JACK

The microphone jack allows you to connect an external mono microphone. Your microphone must be equipped with a 1/8"(3.5 mm) mono mini-plug in order to fit into the microphone jack of your Tablet PC. In order to connect a microphone follow these easy steps: *(See Figure 2-5 on page 11 for location)*

1. Align the connector with the port opening.
2. Push the connector into the port until it is seated.

HEADPHONE JACK

The headphone jack allows you to connect headphones or powered external speakers to your Tablet PC. Your headphones or speakers must be equipped with a 1/8" (3.5 mm) stereo mini-plug. In order to connect headphones or speakers follow these easy steps: *(See Figure 2-5 on page 11 for location)*

1. Align the connector with the port opening.
2. Push the connector into the port until it is seated.

If you plug headphones into the headphone jack, the built-in stereo speakers will be disabled.

EXTERNAL MONITOR PORT

The external monitor port allows you to connect an external monitor. In order to connect an external monitor follow these easy steps: *(See Figure 2-7 on page 13 for location)*

1. Remove the cover from the port opening, if present.
2. Align the connector with the port opening.
3. Push the connector into the port until it is seated.
4. Tighten the two hold-down screws, located on each end of the connector.

When an external monitor is plugged in, pressing the [Fn] + [F10] keys allows you to change your selection of where to send your display video. Each time you press the key combination, you will step to the next choice, starting with the built-in display panel only, moving to the external monitor only, finally moving to both the built-in display panel and an external monitor.

T Series.book Page 50 Thursday, July 31, 2003 10:49 AM

T Series.book Page 51 Thursday, July 31, 2003 10:49 AM

5
Troubleshooting

T Series.book Page 52 Thursday, July 31, 2003 10:49 AM

T Series.book Page 53 Thursday, July 31, 2003 10:49 AM

Troubleshooting

Your LifeBook T Series Tablet PC is sturdy and subject to few problems in the field. However, you may encounter simple setup or operating problems that you can solve on the spot, or problems with peripheral devices, that you can solve by replacing the device. The information in this section helps you isolate and resolve some of these straightforward problems and identify failures that require service.

IDENTIFYING THE PROBLEM

If you encounter a problem that you are having difficulty in solving, go through the following procedure before pursuing further troubleshooting:

1. Turn off your Tablet PC.
2. Make sure the AC adapter is plugged into your Tablet PC and to an active AC power source.
3. Make sure that any card installed in the PC Card slot is seated properly. You can also remove the card from the slot, thus eliminating it as a possible cause of failure.
4. Make sure that any devices connected to the external connectors are plugged in properly. You can also disconnect such devices, thus eliminating them as possible causes of failure.
5. Turn on your Tablet PC. Make sure it has been off at least 10 seconds before you turn it on.
6. Go through the boot sequence.
7. If the problem has not been resolved, refer to the Troubleshooting Table, that follows, for more detailed troubleshooting information.
8. If you still have the problem after taking all of the above approaches, please check our Web site at www.fujitsupc.com for possible known support issues.

- If you keep notes about what you have tried, your support representative may be able to help you more quickly by giving additional suggestions over the phone.
- Do not return a failed Tablet PC to your supplier until you have talked to a support representative.

8. If you have tried the solutions suggested in the Troubleshooting Table and checked our Web site for possible solutions without success, contact your support representative:

   Toll free: 1-800-8Fujitsu
   Fax: 1-901-259-5700
   E-mail: 8fujitsu@fujitsupc.com
   Web site: http://www.fujitsupc.com.

Before you place the call, you should have the following information ready so that the customer support representative can provide you with the fastest possible solution:

- Product name
- Product configuration number
- Product serial number
- Purchase date
- Conditions under which the problem occurred
- Any error messages that have occurred
- Hardware configuration
- Type of device connected, if any

See the Configuration Label on the bottom of your Tablet PC for configuration and serial numbers. *(See figure 2-8 on page 14 for location)*

SPECIFIC PROBLEMS

Using the Troubleshooting Table

When you have problems with your Tablet PC, try to find the symptoms under the Problem column of the troubleshooting table for the feature giving you difficulty.

You will find a description of common causes for that symptom under the column Possible Cause and what, if anything, you can do to correct the condition under Possible Solutions. All possible causes or solutions may not apply to your Tablet PC.

T Series.book Page 54 Thursday, July 31, 2003 10:49 AM

TROUBLESHOOTING TABLE

Problem	Page
Audio Problems	page 54
Docking Problems	page 54
Hard Drive Problems	page 54
Keyboard or Mouse Problems	page 54
Pen Input Problems	page 55
Infrared Problems	page 55
Memory Problems	page 55
Modem Problems	page 55
USB Device Problems	page 56
PC Card Problems	page 56
Power Failures	page 56
Shutdown and Startup Problems	page 58
Video Problems	page 59
Miscellaneous Problems	page 60

Problem	Possible Cause	Possible Solutions
Audio Problems		
There is no sound coming from the built-in speakers.	The software volume control is set too low.	Adjust the sound volume control settings in your software, operating system and applications.
	Headphones are plugged into your Tablet PC.	Plugging in headphones disables the built-in speakers, remove the headphones.
	Software driver is not configured correctly.	Refer to your application and operating system documentation for help.
	Sound could have been muted with function keys.	Press [F3] while holding the [Fn] key to toggle the sound on and off.
Port Replicator Problems		
Tablet PC does not turn on when installed in optional Port Replicator	Port Replicator AC adapter is not plugged in.	Provide power to the Port Replicator.
	Tablet PC is not properly seated in the Port Replicator.	Remove and re-dock your Tablet PC.
Hard Drive Problems		
You cannot access your hard drive.	The setup utility is incorrectly set for your internal (Primary Master) hard drive.	Revise BIOS settings to set the Primary Master correctly. *See "BIOS Setup Utility" on page 34.*
	The wrong drive designator was used by an application when a bootable CD-ROM was used to start the Tablet PC.	Verify drive designator used by application is in use by the operating system. When the operating system is booted from a CD, drive designations are automatically adjusted.
	Security is set so your operating system cannot be started without a password.	Verify your password and security settings.
Keyboard or Mouse Problems		
The built-in keyboard does not seem to work.	The Tablet PC has gone into Standby mode.	Push the **Suspend/Resume** button.
	Your application has locked out your keyboard.	Try to use your integrated pointing device to restart your system. If this fails, turn your Tablet PC off by pressing the suspend/resume button for 10 seconds or more, and then turn it back on.

T Series.book Page 55 Thursday, July 31, 2003 10:49 AM

Problem	Possible Cause	Possible Solutions
You have installed an external keyboard or mouse, and it does not seem to work.	Your external device is not properly installed.	Re-install your device. *See "Device Ports" on page 48.*
	Your operating system software is not set up with the correct driver for that device.	Check your device and operating system documentation and activate the proper driver.
You have connected an external keyboard or a mouse and it seems to be locking up the system.	Your operating system software is not set up with the correct driver for that device.	Check your device and operating system documentation and activate the proper driver.
	Your system has crashed.	Try to restart your Tablet PC. If that fails, turn off the power by pressing the suspend/resume button for at least 10 seconds, and then power back on.
Pen Input Problems		
Cursor is not tracking the pen	The system may be uncalibrated	If the cursor on the screen appears to be misaligned with the pen or is not accurately tracking the pen, calibrate the pen. See "Calibrating the Pen" on page 27.
Infrared Problems		
Infrared data transfer is not working	The IrDA port on the system can't "see" the IrDA port on the other device.	Move the system so that there is a direct line-of-sight path between the two ports.
	The system and the other device are too far from each other.	Move the system and the device so that they are three feet or less from each other.
	The viewing angle between the devices is too great.	The viewing angle between the system port and the device port cannot be more than 15 degrees from a center line between the IrDA port on the Tablet PC and the IrDA port on the other device.
	You are using an old version of IrDA.	The device with which you are trying to communicate must be compliant with IrDA standard 1.1.
	There are possibly problems in one or both devices.	Go to Start -> (All) Programs -> Accessories -> Communications -> New Connection Wizard. Verify that "Set up an advanced connection" is checked and follow the on-screen instructions.
Memory Problems		
Your Power On screen, or Info menu of the BIOS setup utility information, does not show the correct amount of installed memory.	Your memory upgrade module is not properly installed.	Turn off your Tablet PC. Remove and re-install your memory upgrade module. *See "Memory Upgrade Module" on page 43.*
	You have a memory failure.	Check for Power On Self Test (POST) messages. *See "Power On Self Test Messages" on page 61.*
Modem Problems		
Messages about modem operation.	Messages about modem operation are generated by whichever modem application is in use.	See your application software documentation for additional information.

T Series.book Page 56 Thursday, July 31, 2003 10:49 AM

Problem	Possible Cause	Possible Solutions
Modem does not appear to work.	Modem may not have been intialized.	Verify that the modem has been initialized by the operating system. TO do so, right-click on My Computer and select the Hardware tab. Click [Device Manager] and click on the "+" symbol that appears next to Modems. Verify that your device is listed as installed.
USB Device Problems		
You have installed a USB device, but your Tablet PC does not recognize the device, or the device does not seem to work properly.	The device is not properly installed.	Remove and re-install the device. *See "Device Ports" on page 48.*
	The device may have been installed while an application was running, so your Tablet PC is not aware of its installation.	Close the application and restart your Tablet PC.
	Your software may not have the correct software driver active.	See your software documentation and activate the correct driver.
	Your device and another device are assigned the same I/O address.	Check all I/O addresses located within the BIOS setup utility and any other installed hardware or software to make sure there are no duplications.
PC Card Problems		
A card inserted in the PC Card slot does not work or is locking up the system.	The card is not properly installed.	Remove and re-install the card. *See "PC Cards" on page 45.*
	The card may have been installed while an application was running, so your Tablet PC is not aware of its installation.	Close the application and restart your Tablet PC.
	Your software may not have the correct software driver active.	See your software documentation and activate the correct driver.
	Your PC Card device and another device are assigned the same I/O address.	Check all I/O addresses located within the BIOS setup utility and any other installed hardware or software to make sure there are no duplications.
Power Failures		
You turn on your Tablet PC and nothing seems to happen.	The installed battery is completely discharged or there is no power adapter (AC or Auto/Airline) installed.	Check the Status Indicator Panel to determine the presence and condition of the battery. See "Status Indicator Panel" on page 15. Install a charged battery or a Power adapter.
	The battery is installed but is faulty.	Use the Status Indicator Panel to verify the presence and condition of the battery. See "Status Indicator Panel" on page 15. If a battery is indicating a short, remove that battery and operate from another power source or replace that battery.

T Series.book Page 57 Thursday, July 31, 2003 10:49 AM

Problem	Possible Cause	Possible Solutions
You turn on your Tablet PC and nothing seems to happen. (continued)	The battery is low.	Check the Status Indicator Panel to determine the presence and condition of the battery. See "Status Indicator Panel" on page 15. Use a Power adapter until the battery is charged.
	The AC or auto/airline adapter is not plugged in properly.	Verify that your adapter is connected correctly. *See "Power Sources" on page 33.*
	The Power adapter (AC or auto/airline) is faulty.	Try a different Power adapter or install a charged optional second battery.
	The Power adapter (AC or auto/airline) has no power from the AC outlet, airplane seat jack, or the car's cigarette lighter.	Move the AC cord to a different outlet, check for a line switch or tripped circuit breaker for the AC outlet. If you are using an auto/airline adapter in a car make sure the ignition switch is in the On or Accessories position.
Your Tablet PC turns off all by itself.	The power management parameters are set for auto timeouts which are too short for your operating needs.	Press any button on the keyboard, or move the mouse to restore operation. If that fails, push the Suspend/Resume button. Check your power management settings, or close your applications and go to the Power Savings menu of the setup utility to adjust the timeout values to better suit your operation needs.
	You are operating on battery power only and have ignored a low battery alarm until the battery is at the dead battery state and your machine has gone into Dead Battery Suspend mode.	Install a power adapter and then push the Suspend/Resume button. *See "Power Sources" on page 33.*
	You have a battery failure.	Verify the condition of the battery using the Status Indicator panel, and replace or remove any battery that is shorted. *See "Status Indicator Panel" on page 15.*
	Your power adapter has failed or lost its power source.	Make sure the adapter is plugged in and the outlet has power.
Your Tablet PC will not work on battery alone.	The battery is dead.	Replace the battery with a charged one or install a Power adapter.
	No battery is installed.	Install a charged battery.
	The battery is improperly installed.	Verify that the battery is properly connected by re-installing them.
	Your battery is faulty.	Verify the battery condition using the Status Indicator panel and replace or remove any battery that is shorted. *See "Status Indicator Panel" on page 15.*
The battery seems to discharge too quickly.	You are running an application that uses a great deal of power due to frequent hard drive or CD-ROM access, or use of a modem or LAN PC card.	Use a power adapter for this application when at all possible.

T Series.book Page 58 Thursday, July 31, 2003 10:49 AM

Problem	Possible Cause	Possible Solutions
The battery seems to discharge too quickly. (continued)	The power savings features may be disabled.	Check the power management and/or setup utility settings in the Power Savings menu and adjust according to your operating needs.
	The brightness is turned all the way up.	Turn down the brightness adjustment. The higher the brightness the more power your display uses.
	The battery is very old.	Replace the battery.
	The battery has been exposed to high temperatures.	Replace the battery.
	The battery is too hot or too cold.	Restore the Tablet PC to normal operating temperature. The Charging icon on the Status Indicator panel will flash when the battery is outside its operating range.
	The AC Adapter is defective.	Replace with another AC Adapter to see if the problem persists. Replace any defective AC Adapters.
Shutdown and Startup Problems		
The Suspend/Resume button does not work.	The Suspend/Resume button is disabled from the Advanced submenu of the Power menu of the setup utility.	Enable the button from the setup utility.
	You did not hold the button in long enough.	Hold the button longer. This may need to be a few seconds if your application is preventing the CPU from checking for button pushes.
	There may be a conflict with the application software.	Close all applications and try the button again.
The system powers up, and displays power-on information, but fails to load the operating system.	The boot sequence settings of the setup utility are not compatible with your configuration.	Set the operating source by pressing the [F2] key while the Fujitsu logo is on screen, entering the setup utility and adjusting the source settings from the Boot menu. *See "BIOS Setup Utility" on page 34.*
	You have a secured system requiring a password to load your operating system.	Make sure you have the right password. Enter the setup utility and verify the Security settings and modify them as accordingly. *See "BIOS Setup Utility" on page 34.*
An error message is displayed on the screen during the Tablet PC boot sequence.	Power On Self Test (POST) has detected a problem.	See the Power On Self Test (POST) messages to determine the meaning and severity of the problem. Not all messages are errors; some are simply status indicators. *See "Power On Self Test Messages" on page 61.*
Your system display won't turn on when the system is turned on or when the system has resumed.	The system may be password-protected.	Check the status indicator panel to verify that the Security icon is blinking. If it is blinking, enter your password.

T Series.book Page 59 Thursday, July 31, 2003 10:49 AM

Problem	Possible Cause	Possible Solutions
Your Tablet PC appears to change setup parameters when you start it.	BIOS setup changes were not saved when you made them and exited the BIOS setup utility returning it to previous settings.	Make sure you select **Save Changes And Exit** when exiting the BIOS setup utility.
	The BIOS CMOS back-up battery has failed.	Contact your support representative for repairs. This is not a user-serviceable part.
Video Problems		
The built-in display is blank when you turn on your Tablet PC.	The angle of the display and the brightness settings are not adequate for your lighting conditions.	Move the display and the brightness control until you have adequate visibility.
	The optional Port Replicator is attached, an external monitor is plugged in, and the Tablet PC is set for an external monitor only.	Pressing [F10] while holding down the [Fn] key allows you to change your selection of where to send your display video. Each time you press the combination of keys you will step to the next choice. The choices, in order are: built-in display only, external monitor only, both built-in display and external monitor.
	The power management timeouts may be set for very short intervals and you failed to notice the display come on and go off again.	Press any button the keyboard, or move the mouse to restore operation. If that fails, push the Suspend/ Resume button. (The display may be shut off by Standy mode, Auto Suspend or Video Timeout)
The Tablet PC turned on with a series of beeps and your built-in display is blank.	Power On Self Test (POST) has detected a failure which does not allow the display to operate.	Contact your support representative.
Your system display won't turn on when the system is turned on or when the system has resumed.	The system may be password-protected.	Check the status indicator panel to verify that the Security icon is blinking. If it is blinking, enter your password.
The display goes blank by itself after you have been using it.	The Tablet PC has gone into Video Timeout, Standby Mode, or Hibernate Mode because you have not used it for a period of time.	Press a button on the keyboard, or move the mouse to restore operation. If that fails, push the Suspend/ Resume button. Check your power management settings, or close your applications and go to the Power Savings menu of the setup utility to adjust the timeout values to better suit your operation needs. *See "BIOS Setup Utility" on page 34.*
	The power management time-outs may be set for very short intervals and you failed to notice the display come on and go off again.	Press any button on the keyboard, or move the mouse to restore operation. If that fails, push the Suspend/ Resume button. (The display may be shut off by Standby Mode, Auto Suspend or Video Timeout)
The display does not close.	A foreign object, such as a paper clip, is stuck between the display and the keyboard.	Remove all foreign objects from the keyboard.

T Series.book Page 60 Thursday, July 31, 2003 10:49 AM

Problem	Possible Cause	Possible Solutions
The display has bright or dark spots.	If the spots are very tiny and few in number, this is normal for a large LCD display.	This is normal; do nothing.
	If the spots are numerous or large enough to interfere with your operation needs.	The display needs technical diagnosis; contact your support representative.
The application display uses only a portion of your screen and is surrounded by a dark frame.	You are running an application that does not support 800 x 600/1024 x 768 pixel resolution display and display compression is enabled.	When compensation is disabled, a clearer but smaller display for applications that do not support 800 x 600/1024 x 768 pixel resolution will result. You can fill the screen but have less resolution by changing your compensation setting. (See the Video Features submenu, located within the Advanced menu of the BIOS. *See "BIOS Setup Utility" on page 34.*
You have connected an external monitor and it does not display any information.	Your BIOS setup is not set to enable your external monitor.	Try toggling the video destination by pressing [Fn] and [F10] together, or check your BIOS setup and enable your external monitor. (See the Video Features submenu, located within the Advanced Menu of the BIOS. *See "BIOS Setup Utility" on page 34.*
	Your external monitor is not properly installed.	Reinstall your device. *See "External Monitor Port" on page 49.*
	Your operating system software is not set up with the correct software driver for that device.	Check your device and operating system documentation and activate the proper driver.
You have connected an external monitor and it does not come on.	Your external monitor may not be compatible with your Tablet PC.	See your monitor documentation and the External Monitor Support portions of the Specifications section. See "Specifications" on page 73.
Miscellaneous Problems		
An error message is displayed on the screen during the operation of an application.	Application software often has its own set of error message displays.	See your application manual and help displays screens for more information. Not all messages are errors some may simply be status.

T Series.book Page 61 Thursday, July 31, 2003 10:49 AM

POWER ON SELF TEST MESSAGES

The following is an alphabetic list of error-and-status messages that Phoenix BIOS and/or your operating system can generate and an explanation of each message. Error messages are marked with an *. If an error message is displayed that is not in this list, write it down and check your operating system documentation both on screen and in the manual. If you can find no reference to the message and its meaning is not clear, contact your support representative for assistance.

nnnn Cache SRAM Passed
Where nnnn is the amount of system cache in kilobytes successfully tested by the Power On Self Test. (This can only appear if you have an SRAM PC Card installed.)

***Extended RAM Failed at offset: nnnn**
Extended memory not working or not configured properly. If you have an installed memory upgrade module, verify that the module is properly installed. If it is properly installed, you may want to check your Windows Setup to be sure it is not using unavailable memory until you can contact your support representative.

nnnn Extended RAM Passed
Where nnnn is the amount of memory in kilobytes successfully tested.

***Failing Bits: nnnn The hex number nnnn**
This is a map of the bits at the memory address (in System, Extended, or Shadow memory) which failed the memory test. Each 1 (one) in the map indicates a failed bit. This is a serious fault that may cause you to lose data if you continue. Contact your support representative.

***Fixed Disk x Failure or Fixed Disk Controller Failure (where x = 1-4)**
The fixed disk is not working or not configured properly. This may mean that the hard drive type identified in your setup utility does not agree with the type detected by the Power On Self Test. Run the setup utility to check for the hard drive type settings and correct them if necessary. If the settings are OK and the message appears when you restart the system, there may be a serious fault which might cause you to lose data if you continue. Contact your support representative.

***Invalid NVRAM media type**
Problem with NVRAM access. In the unlikely case that you see this message you may have some display problems. You can continue operating but should contact your support representative for more information.

***Keyboard controller error**
The keyboard controller test failed. You may have to replace your keyboard or keyboard controller but may be able to use an external keyboard until then. Contact your support representative.

***Keyboard error**
Keyboard not working. You may have to replace your keyboard or keyboard controller but may be able to use an external keyboard until then. Contact your support representative.

***Keyboard error nn**
BIOS discovered a stuck key and displays the scan code for the stuck key. You may have to replace your keyboard but may be able to use an external keyboard until then. Contact your support representative.

***Operating system not found**
Operating system cannot be located on either drive A: or drive C: Enter the setup utility and see if both the fixed disk, and drive A: are properly identified and that the boot sequence is set correctly. Unless you have changed your installation greatly, the operating system should be on drive C:. If the setup utility is correctly set, your hard drive may be corrupted and your system may have to be re-installed from your back up media.

***Parity Check 1 nnnn**
Parity error found in the system bus. BIOS attempts to locate the address and display it on the screen. If it cannot locate the address, it displays "????". This is a potentially data destroying failure. Contact your support representative.

***Parity Check 2 nnnn**
Parity error found in the I/O bus. BIOS attempts to locate the address and display it on the screen. If it cannot locate the address, it displays "????". This is a potentially data destroying failure. Contact your support representative.

***Press <F1> to resume, <F2> to SETUP**
Displayed after any recoverable error message. Press the [F1] key to continue the boot process or the [F2] key to enter Setup and change any settings.

***Previous boot incomplete – Default configuration used**
Previous Power On Self Test did not complete successfully. The Power On Self Test will load default values and offer to run Setup. If the previous failure was caused by incorrect values and they are not corrected, the next boot will likely fail also. If using the default settings does not allow you to complete a successful boot sequence, you should turn off the power and contact your support representative.

T Series.book Page 62 Thursday, July 31, 2003 10:49 AM

***Real time clock error**
Real-time clock fails BIOS test. May require board repair. Contact your support representative.

***Shadow RAM Failed at offset: nnnn**
Shadow RAM failed at offset nnnn of the 64k block at which the error was detected. You are risking data corruption if you continue. Contact your support representative.

nnnn Shadow RAM Passed
Where nnnn is the amount of shadow RAM in kilobytes successfully tested.

***System battery is dead – Replace and run SETUP**
The BIOS CMOS RAM memory hold up battery is dead. This is part of your BIOS and is a board mounted battery which requires a support representative to change. You can continue operating but you will have to use setup utility default values or reconfigure your setup utility every time you turn off your Tablet PC.

System BIOS shadowed
System BIOS copied to shadow RAM.

***System CMOS checksum bad – run SETUP**
BIOS CMOS RAM has been corrupted or modified incorrectly, perhaps by an application program that changes data stored in BIOS memory. Run Setup and reconfigure the system.

***System RAM Failed at offset: nnnn**
System memory failed at offset nnnn of in the 64k block at which the error was detected. This means that there is a fault in your built-in memory. If you continue to operate, you risk corrupting your data. Contact your support representative for repairs.

nnnn System RAM Passed
Where nnnn is the amount of system memory in kilobytes successfully tested.

***System timer error**
The timer test failed. The main clock that operates the computer is faulty. Requires repair of system board. Contact your support representative for repairs.

UMB upper limit segment address: nnnn
Displays the address of the upper limit of Upper Memory Blocks, indicating released segments of the BIOS memory which may be reclaimed by a virtual memory manager.

Video BIOS shadowed
Video BIOS successfully copied to shadow RAM.

MODEM RESULT CODES

The operating system and application software that is factory installed detects the modem characteristics and provides the necessary command strings to operate the modem. The internal modem operation is controlled by generic AT commands from the operating system and application software. The standard long form result codes may, in some cases, be displayed on your screen to keep you informed of the actions of your modem. The operating system and application software may suppress display of the result codes.

Examples of result codes are:

- OK
- NO CARRIER
- NO DIALTONE
- CONNECT 53000 (Connection complete at 53,000 bps.)
- ERROR
- FAX
- RING (This means an incoming call.)
- BUSY
- NO ANSWER

When using the internal modem with applications that are not factory installed refer to the application documentation.

Restoring Your Pre-installed Software

The Drivers and Applications Restore (DAR) CD contains:

- Sets of device drivers and Fujitsu utilities (in specific directories) that are unique to your LifeBook notebook configuration for use as documented below.
- A link to the Drive Image Special Edition (DISE) utility on your hard disk drive.
- Read-me files that provide additional use information for items on this CD-ROM.

- In order to install applications and/or drivers from the DAR CD, you will need to connect an external CD drive to your system.
- If the DAR CD is in the drive when you boot up the system, and the Boot Sequence is set in the BIOS to boot from the CD drive first (see "Creating a backup image when booting up" on page 63), a message will appear informing you that if you proceed, you will have a choice of: creating a new backup of drive C:, restoring a previous backup, or restoring the original factory image.

  Note that creating a new backup will overwrite any previous backups, and restoring a backup or factory image will overwrite all information on the hard drive, including saved files. If you wish to install drivers or applications **only** from the CD, remove the disk from the drive, reboot the system, and insert the CD after Windows has started.

If you have access to the internet, visit the Fujitsu Support web site at www.fujitsupc.com to check for the most current information, drivers and hints on how to perform recovery and system updates.

DRIVE IMAGE SPECIAL EDITION (DISE)

PowerQuest Drive Image Special Edition (DISE) provides a way to restore your computer if you experience a hard disk crash or other system failure. Fujitsu has used DISE to create an image of everything installed on the computer at the time you purchased it. The image is saved on a separate partition on the hard disk. You can use DISE to restore the factory image and return your computer to the state in which it was shipped from Fujitsu.

Although it is not necessary, you can use DISE to store additional image files you create. For example, if you install several applications and save data files on your hard disk, you can create a new image that includes them and then save that image file on the hard disk. Then, in the event of a hard disk failure, you can restore the image that includes the applications and data files you use.

Using the DISE feature will reduce the amount of usable disk space on your hard disk drive.

Creating a Backup Image

You can create a system backup image of your C:\ drive at any time. The C:\ partition must be a FAT, FAT32, or NTFS partition, and it must be directly before the backup partition on your hard disk.

There are two ways to implement the DISE utility: when booting up the system, or from the desktop.

Creating a backup image when booting up

Before creating an image at boot-up, you must first change the boot-up priority in the BIOS so that the system will go to the media drive first, rather than trying to boot-up from the hard drive or an external floppy disk drive.

To change the boot-up priority:

1. Start your system and press the [F2] key when the Fujitsu logo appears. You will enter the BIOS Setup Utility.
2. Using the arrow keys, go to the Boot menu.
3. Arrow down to the Boot Device Priority submenu and press [Enter].
4. Arrow down to the CD-ROM drive in the list, and press the space bar (or the + key) to move the CD-ROM drive to the top of the list. (The system attempts to boot from the devices in the order in which they are listed.)
5. Press [F10], then click on [Yes] to exit the BIOS Setup Utility and return to the boot process.

After you have changed the boot priority, you can create a backup image when you are booting up:

1. Install the DAR CD in the drive prior to booting up. When bootup begins, a message appears informing you that if you proceed, you will be able to:
   - Create a new backup of drive C
   - Restore a previous backup, or,
   - Restore the original factory image.

Note that creating a new backup will overwrite any previous backups, and restoring a backup or factory image will overwrite all information on the hard drive, including saved files.

T Series.book Page 64 Thursday, July 31, 2003 10:49 AM

2. After you click [**Y**]**es.** You will be presented with two options: [**Create New Backup**] and [**Restore Backup**].

   After you click [**Create New Backup**], follow the on-screen instructions. By selecting [**Create New Backup**], a new image will be written to your backup partition. This will overwrite any previously created image.

Creating a backup image from the desktop

To create a backup image from the desktop, select Drive Image SE from the Program list. You will initially be prompted to create a backup diskette. It is not necessary to create the backup diskette, since the DAR CD performs the same function.

1. At the Drive Image Special Edition main screen, click **Options**> **Create New Backup.** DISE displays a warning that it must go to DOS to create the image.
2. Click **Yes.**

   DISE creates an image file in the backup partition. If you created a backup image previously, the new image overwrites the old one.

Enlarging the Backup Partition

If there is not enough unused space in the backup partition on your hard disk, DISE will resize the partition. DISE will display the minimum, maximum, and recommended sizes for the backup partition. You choose the size you want.

DISE takes the space from the FAT, FAT32, or NTFS partition that you are backing up. If there is not enough unused space in that partition to take, you will not be able to resize the backup partition and create an image file. You can delete files from the FAT, FAT32, or NTFS partition to create more unused space on the hard disk.

Restoring a Backup Image

You can restore either a factory image or a backup image you created. Be aware that restoring a backup image will replace the contents of the C:\ partition with the image you restore.

1. Disable virus protection software. If virus protection software is enabled, DISE will lock up.
2. From the DISE main window, click **Options** > **Restore Backup** to restore an image you created, or click **Options** > **Restore Factory Backup** to restore the factory image.

   DISE shuts down to DOS and restores the image file.

Re-Installing Individual Drivers and Applications

The Drivers and Application CD can be used to selectively re-install drivers and/or applications that may have been un-installed or corrupted.

To re-install drivers and/or applications:

1. Boot up the system and insert the DAR CD after Windows has started. A Fujitsu Welcome screen is displayed after the CD is inserted.
2. From the left frame of the Welcome screen, “System Components” and “3rd Party Applications” can be selected. System Components are those drivers and utilities that have been developed by Fujitsu; 3rd Party Applications are applications developed by other vendors.

Installing System Components

1. To install system components, click on “System Components” in the left frame of the Welcome screen. A list of utilities and drivers will be displayed. Select one or more items from the list, or click [Select All] to select all items in the list. (To de-select your choices, click the [Clear All] button.
2. Click [Install Selected Subsystems] to install the selected items.

Installing 3rd Party Applications

1. To install 3rd party applications, click on “3rd Party Applications” in the left frame of the Welcome screen. A list of applications will be displayed.
2. Select one of the items from the list, and follow the instructions that appear on the screen. Note that only one application may be installed at a time.
3. Repeat step 2 to install additional applications.

6
Care and Maintenance

T Series.book Page 66 Thursday, July 31, 2003 10:49 AM

T Series.book Page 67 Thursday, July 31, 2003 10:49 AM

Care and Maintenance

If you use your LifeBook T Series Tablet PC carefully, you will increase its life and reliability. This section provides some tips for looking after the Tablet PC and its devices.

Electrical equipment may be hazardous if misused. Operations of this product or similar products, must always be supervised by an adult. Do not allow children access to the interior of any electrical products and do not permit them to handle any cables.

LIFEBOOK T SERIES TABLET PC

Caring for your Tablet PC

- Your Tablet PC is a durable but sensitive electronic device. Treat it with care.
- Make a habit of transporting it in a suitable carrying case.
- Do not attempt to service the computer yourself. Any unauthorized service performed on the computer will void the warranty.
- Always follow installation instructions closely.
- Keep it away from food and beverages.
- If you accidentally spill liquid on your Tablet PC:
  1. Turn it off.
  2. Position it so that the liquid can run out.
  3. Let it dry out for 24 hours, or longer if needed.
  4. If your Tablet PC will not boot after it has dried out, call your support representative.
- Do not use your Tablet PC in a wet environment (near a bathtub, swimming pool).
- Always use the AC adapter and batteries that are approved for your Tablet PC.
- Avoid exposure to sand, dust and other environmental hazards.
- Do not expose your Tablet PC to direct sunlight for long periods of time as temperatures above 140° F (60° C) may damage your Tablet PC.
- Keep the covers closed on the connectors and slots when they are not in use.
- Do not put heavy or sharp objects on the computer.
- If you are carrying your Tablet PC in a briefcase, or any other carrying case, make sure that there are no objects in the case pressing on the lid.
- Do not drop your Tablet PC.
- Do not touch the screen with any sharp objects.

Cleaning your Tablet PC

- Always disconnect the power plug. (Pull the plug, not the cord.)
- Clean your Tablet PC with a damp, lint-free cloth. Do not use abrasives or solvents.
- Use a soft cloth to remove dust from the screen. Never use glass cleaners.

Storing your Tablet PC

- If storing your Tablet PC for a month or longer, turn the Tablet PC off, fully charge the battery, then remove and store all Lithium ion batteries.
- Store your Tablet PC and batteries separately. If you store your Tablet PC with a battery installed, the battery will discharge, and battery life will be reduced. In addition, a faulty battery might damage the Tablet PC.
- Store your Tablet PC in a cool, dry location. Temperatures should remain between 13º F (-25º C) and 140º F (60º C).

Traveling with your Tablet PC

- Do not transport your Tablet PC while it is turned on.
- Do not check your Tablet PC as baggage. Carry it with you.
- When traveling with the hard drive removed, wrap the drive in a non-conducting materials (cloth or paper). If you have the drive checked by hand, be ready to install the drive if needed. Never put your hard drive through a metal detector. Have your hard drive hand-inspected by security personnel. You can however, put your hard drive through a properly tuned X-ray machine.
- Take the necessary plug adapters if you're traveling overseas. Check the following diagram to determine which adapter you'll need or ask your travel agent.

Outlet Type	Location
	United States, Canada, Mexico, parts of Latin America, Japan, Korea, the Philippines, Taiwan
	Russia and the Commonwealth of Independent States (CIS), most of Europe, parts of Latin America, the Middle East, parts of Africa, Hong Kong, India, most of South Asia
	United Kingdom, Ireland, Malaysia, Singapore, parts of Africa
	China, Australia, New Zealand

Figure 6-1.

T Series.book Page 68 Thursday, July 31, 2003 10:49 AM

KEYBOARD

Caring for your Keyboard

The keyboard of your computer is a very sensitive instrument. It is made up of many switches that are activated when you press on the keys. The keyboard is a major component of the heat dissipation system in a Tablet PC. Due to heat and size considerations the keyboard is not sealed. Because the keys are so close together, it is not easy for the user to see when liquids have fallen onto the circuitry below the keys.

Attempting to clean the keyboard with a spray on cleaner or rag soaked with cleaner the liquid can drip onto the circuitry sight unseen. Once the liquid seeps between the layers of circuitry, it can cause corrosion or other damage to the circuits. This can result in keys which no longer operate, or which, when pressed, record the wrong characters and other similar failures.

There is no repair for this problem other than replacement. The solution is to become aware of the issue and take appropriate steps to protect your keyboard.

To clean the keyboard, use a rag dampened slightly with cleaning solution. Use extreme care to prevent liquid from dripping between the keys. Spraying directly on the keys should be avoided. The spray should be applied first to the cloth, and then the cloth wiped over the keys.

BATTERIES

Caring for your Batteries

- Always handle batteries carefully.
- Do not short-circuit the battery terminals (that is, do not touch both terminals with a metal object). Do not carry lose batteries in a pocket or purse where they may mix with coins, keys, or other metal objects. Doing so may cause an explosion or fire.
- Do not drop, puncture, disassemble, mutilate or incinerate the battery.
- Recharge batteries only as described in this manual and only in ventilated areas.
- Do not leave batteries in hot locations for more than a day or two. Intense heat can shorten battery life.
- Do not leave a battery in storage for longer than 6 months without recharging it.

Increasing Battery Life

- Keep brightness to the lowest comfortable level.
- Set the power management for maximum battery life.
- Put your Tablet PC in Standby mode when it is turned on and you are not actually using it.
- Limit your CD-ROM access.
- Disable the Windows CD auto insert function.
- Always use fully charged batteries.
- Eject PCMCIA cards when not in use.

OPTIONAL FLOPPY DISK DRIVE AND FLOPPY DISKS

Caring for your Floppy Disks

- Avoid using the floppy disks in damp and dusty locations.
- Never store a floppy disk near a magnet or magnetic field.
- Do not use a pencil or an eraser on a disk or disk label.
- Avoid storing the floppy disks in extremely hot or cold locations, or in locations subject to severe temperature changes. Store at temperatures between 50º F (10º C) and 125º F (52º C).
- Do not touch the exposed part of the disk behind the metal shutter.

Caring for your optional Optional Floppy Disk Drive

- To clean, wipe the floppy disk drive clean with a dry soft cloth, or with a soft cloth dampened with water or a solution of neutral detergent. Never use benzene, paint thinner or other volatile material.
- Avoid storing the floppy disk drive in extremely hot or cold locations, or in locations subject to severe temperature changes. Store at temperatures between 50º F (10º C) and 125º F (52º C).
- Keep the floppy disk drive out of direct sunlight and away from heating equipment.
- Avoid storing the floppy disk drive in locations subject to shock and vibration.
- Never use the floppy disk drive with any liquid, metal, or other foreign matter inside the floppy disk drive or disk.
- Never disassemble or dismantle your floppy disk drive.

OPTIONAL CD DRIVE AND CDs

Caring for your CDs

CDs are precision devices and will function reliably if given reasonable care.

- Always store your CDs in its case when it is not in use.
- Always handle CDs by the edges and avoid touching the surface.
- Avoid storing any CDs in extreme temperatures.
- Do not bend CDs or set heavy objects on them.
- Do not spill liquids on CDs.
- Do not scratch CDs.
- Do not put a label on CDs.
- Do not get dust on CDs.
- Never write on the label surface with a ballpoint pen or pencil. Always use a felt pen.
- If a CD is subjected to a sudden change in temperature, cold to warm condensation may form on the sur-

T Series.book Page 69 Thursday, July 31, 2003 10:49 AM

face. Wipe the moisture off with a clean, soft, lint free cloth and let it dry at room temperature. DO NOT use a hair dryer or heater to dry CDs.

- If a CD is dirty, use only a CD cleaner or wipe it with a clean, soft, lint free cloth starting from the inner edge and wiping to the outer edge.

Caring for your Optional CD-ROM Drive

Your CD-ROM drive is durable but you must treat it with care. Please pay attention to the following points:

- The drive rotates the compact disk at a very high speed. Do not carry it around or subject it to shock or vibration with the power on.
- Avoid using or storing the drive where it will be exposed to extreme temperatures.
- Avoid using or storing the drive where it is damp or dusty.
- Use of a commercially-available lens cleaner kit is recommended to maintain the drive lens.
- Avoid using or storing the drive near magnets or devices that generate strong magnetic fields.
- Avoid using or storing the drive where it will be subjected to shock or vibration.
- Do not disassemble or dismantle the CD-ROM drive.

PC CARDS

Caring for your PC Card Slots

PC Cards are durable, but you must treat them with care. The documentation supplied with your PC Cards provides specific information for caring for the cards.

When you don't have a PC Card installed in your system, you should be sure to install the PC Card slot inserts that came with your system. These will help to keep dust and dirt out of your system.

T Series.book Page 70 Thursday, July 31, 2003 10:49 AM

7
Specifications

T Series.book Page 72 Thursday, July 31, 2003 10:49 AM

T Series.book Page 73 Thursday, July 31, 2003 10:49 AM

Specifications

This section provides the hardware and environmental specifications for your LifeBook T Series Tablet PC. Specifications of particular configurations will vary.

CONFIGURATION LABEL

Your LifeBook T Series Tablet PC has a configuration label located on the bottom. *(See figure 2-8 on page 14 for location)*. This label contains specific information regarding the options you've chosen for your Tablet PC. Following is an example label and information on how to read your own configuration label.

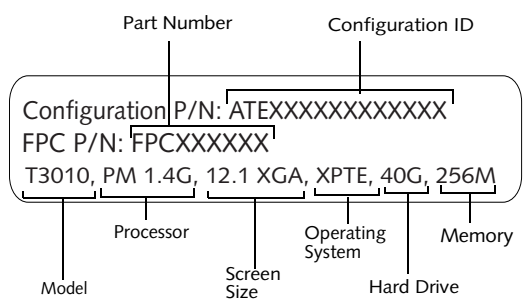

Figure 7-1. Configuration Label

LifeBook T Series Tablet PC Specifications	
The specifications for your particular model may vary. To determine the specifications for your system, please visit our Web site at: www.fujitsupc.com.	
Physical Specifications	
Dimensions	11.5″ w x 9.3″ d x 1.1 / 1.4 (293 mm x 236 mm x 27.4 / 36.4 mm)
Processing Specifications	
CPU/Speed	Intel® Pentium® M processor 1.4 GHz @ 1.48V
Chip set	Intel 855GM - 400 MHz
Memory/Storage Specifications	
Main RAM	• 256 MB SDRAM (DDR 266 MHz) • 144-pin SO DIMM slots x 2 256 MB, 512 MB, and 1.0 GB modules available, with a system maximum of 2.0 GB.
L1 cache (CPU)	64 KB on-die
L2 cache	1 MB on-die

LifeBook T Series Tablet PC Specifications (Continued)	
BIOS ROM	1 MB (Boot Block Type Flash ROM)
Hard disk drive	• 2.5″ HDD • Minimum 40 GB IDE HDD • ATA 100 • Shock-mounted • SMART Support
Display Specifications	
Display	• Color LCD • Active Digitizer • 32-bit color • 12.1″ TFT XGA (1024 x 768), 16M colors External monitor support: VGA (1600 x 1200 maximum) • Brightness: 8 levels • Viewing Angle: Horizontal: 30 degrees (min.) Vertical: 10 degrees (min.)
VRAM	Intel 855MG chipset with 8 MB shared memory using Dynamic Video Memory Technology (DVMT) delivers low-power, high-performance 3D/2D graphics, video, and display capabilities. Dynamic Video Memory Technology (DVMT) dynamically responds to application requirements and efficiently allocates the proper amount of memory (maximum is 64 MB) for optimal graphics and system performance.
Interface Specifications	
Integrated Interfaces	• Modem (RJ-11) LAN (RJ-45) • USB 2.0 x 2 • DC-In • IrDA • 15-pin D-SUB connector for external VGA monitor • Docking connector
Interfaces on Optional Port Replicator	• DC Power • Pass-through LAN Port • External Monitor • USB 2.0 x 2 • Docking Port
PC Card Slots	• Two Type I/Type II or one Type III • PCMCIA CardBus version 3.0

T Series.book Page 74 Thursday, July 31, 2003 10:49 AM

LifeBook T Series Tablet PC Specifications (Continued)	
Infrared	• System IR Port • IrDA version 1.1 (FIR, 4 Mbps)
User Interface support	• Keyboard Pitch: 19 mm, Stroke: 3 mm • TouchPad pointing device with scroll button • Active digitizer with pen input • On-screen keyboard
Audio	• RealTek ALC202 with 18-bit stereo audio, full duplex • Internal mono microphone and speaker • Mono microphone and stereo headphone jacks
User Controls	• Programmable Application Buttons, each with primary and secondary functions (default applications: Microsoft Journal and Calculator) • Security button support • Suspend/Resume button
Status Indicators (LCDs)	• Power • Charge/DC-In • Battery level • HDD • PC Card • Caps Lock • Num Lock • Scroll Lock • Security
Power Specifications	
Main Battery	• 6-cell • Removable, Lithium ion • 10.8 V @3600 mAh, 38.9 Wh • Warm-swappable • Recharge Time: Approximately 3.2 hours • Suspend Life: Minimum 3 days Off State: Approximately 20 days
Bridge Battery	• 6-cell NiMH, 35 mAh • Life (with Suspend-to-RAM on bridge battery only): 5 minutes from full charge
AC Adapter	Autosensing 100 - 240V, supplying 16 VDC, with a current of 3.75 A

LifeBook T Series Tablet PC Specifications (Continued)	
Environmental Specifications	
Temperature	Operating: 41° to 95° F (5° to 35° C) Non-operating: 5° to 140° F (-15° to 60° C)
Humidity	Operating: 20 to 85% non-condensing Non-operating: 8 to 85% non-condensing
Agency Approval Specifications	
Emissions	• EN55022 (CISPR22) Class B • FCC 15, Class B • FCC 15C, 15.247 • ETSI EN 300-328 • ICES-003 • Canada RSS-210
Immunity	• EN55024 (1998) • ETSI EN 301-489-17 V.1.1.1 (2000-9)
Safety	• UL and cUL Listed, UL 60950 • TuV T-Mark, EN60950
Telecom	• FCC Part 68 • IC CS-03
Additional Specifications	
Operating systems	• Microsoft® Windows® XP Tablet PC Edition

T Series.book Page 75 Thursday, July 31, 2003 10:49 AM

Regulatory Information

Changes or modifications not expressly approved by Fujitsu could void this user's authority to operate the equipment

FCC NOTICES

Notice to Users of Radios and Television

These limits are designed to provide reasonable protection against harmful interference in a residential installation. This equipment generates, uses, and can radiate radio frequency energy and, if not installed and used in accordance with the instructions, may cause harmful interference to radio communications. However, there is no guarantee that interference will not occur in a particular installation. If this equipment does cause harmful interference to radio or television reception, which can be determined by turning the equipment off and on, the user is encouraged to try to correct the interference by one or more of the following measures:

- Reorient or relocate the receiving antenna.
- Increase the separation between the equipment and receiver.
- Connect the equipment into an outlet that is on a different circuit than the receiver.
- Consult the dealer or an experienced radio/TV technician for help.

Shielded interconnect cables must be employed with this equipment to ensure compliance with the pertinent RF emission limits governing this device.

Notice to Users of the US Telephone Network

This equipment contains an internal modem (Fujitsu Media Devices, MBH 7MD33) that complies with Part 68 of the FCC rules. On the bottom of this equipment is a label that contains, among other information, the FCC registration number and ringer equivalence number (REN) for this equipment. If requested, this information must be provided to the telephone company.

This equipment is designed to be connected to the telephone network or premises wiring using a standard jack type USOC RJ11C. A plug and jack used to connect this equipment to the premises wiring and telephone network must comply with the applicable FCC Part 68 rules and requirements adopted by the ACTA. A compliant telephone cord and modular plug is provided with this product. It is designed to be connected to a compatible modular jack that is also compliant.

The ringer equivalent number (REN) of this equipment is 0.0B as shown on the label. The REN is used to determine the number of devices that may be connected to a telephone line. Excessive RENs on a telephone may result in the devices not ringing in response to an incoming call. In most but not all areas, the sum of RENs should not exceed five (5.0). To be certain of the number of devices that may be connected to a line, as determined by the total RENs, contact the local telephone company.

If this equipment causes harm to the telephone network, the telephone company will notify you in advance that temporary discontinuance of service may be required. But if advance notice isn't practical, the telephone company will notify the customer as soon as possible. Also, you will be advised of your right to file a complaint with the FCC if you believe it is necessary.

The telephone company may make changes in its facilities, equipment, operations or procedures that could effect the operation of the equipment. If this happens the telephone company will provide advance notice in order for you to make necessary modifications to maintain uninterrupted service.

If trouble is experienced with this equipment, for repair or warranty information, please refer to the manual or contact Fujitsu PC Corporation, Customer Service. If the equipment is causing harm to the telephone network, the telephone company may request that you disconnect the equipment until the problem is resolved.

The equipment cannot be used on public coin service provided by the telephone company. Connection to party line service is subject to state tariffs. (Contact the state public utility commission, public service commission or corporation commission for information).

If your home has specially wired alarm equipment connected to the telephone line, ensure the installation of this computer does not disable your alarm equipment. If you have any questions about what will disable alarm equipment, consult your telephone company or a qualified installer.

The Telephone Consumer Protection Act of 1991 makes it unlawful for any person to use a computer or other electronic device to send any message via a telephone fax machine unless such message clearly contains in a margin at the top or bottom of each transmitted page or on the first page of the transmission, the date an time it is sent and an identification of the business or other entity, or other individual sending the message and the telephone number of the sending machine or such business, other entity, or individual.

T Series.book Page 76 Thursday, July 31, 2003 10:49 AM

DOC (INDUSTRY CANADA) NOTICES

Notice to Users of Radios and Television

This Class B digital apparatus meets all requirements of Canadian Interference-Causing Equipment Regulations.

CET appareil numérique de la class B respecte toutes les exigence du Réglement sur le matérial brouilleur du Canada.

Notice to Users of the Canadian Telephone Network

NOTICE: This equipment (Fujitsu Media Devices modem, MBH 7MD33) meets the applicable Industry Canada Terminal Equipment Technical Specifications. This is confirmed by the registration number. The abbreviation, IC, before the registration number (4061A-8687) signifies that registration was performed based on a Declaration of Conformity indicating that Industry Canada technical specifications were met. It does not imply that Industry Canada approved the equipment.

Before connecting this equipment to a telephone line the user should ensure that it is permissible to connect this equipment to the local telecommunication facilities. The user should be aware that compliance with the certification standards does not prevent service degradation in some situations.

Repairs to telecommunication equipment should be made by a Canadian authorized maintenance facility. Any repairs or alterations not expressly approved by Fujitsu or any equipment failures may give the telecommunication company cause to request the user to disconnect the equipment from the telephone line.

NOTICE: The Ringer Equivalence Number (REN) for this terminal equipment is 0.0. The REN assigned to each terminal equipment provides an indication of the maximum number of terminals allowed to be connected to a telephone interface. The termination on an interface may consist of any combination of devices subject only to the requirement that the sum of the Ringer Equivalence Numbers of all the devices does not exceed five.

For safety, users should ensure that the electrical ground of the power utility, the telephone lines and the metallic water pipes are connected together. Users should NOT attempt to make such connections themselves but should contact the appropriate electric inspection authority or electrician. This may be particularly important in rural areas.

Avis Aux Utilisateurs Du Réseau Téléphonique Canadien

AVIS: Le présent matériel est conforme aux spécifications techniques d'Industrie Canada applicables au matériel terminal. Cette conformité est confirmée par le numéro d'enregistrement. Le sigle IC, placé devant le numéro d'enregistrement (4061A-8687), signifie que l'enregistrement s'est effectué conformément à une déclaration de conformité et indique que les spécifications techniques d'Industrie Canada ont été respectées. Il n'implique pas qu'Industrie Canada a approuvé le matériel.

Avant de connecter cet équipement à une ligne téléphonique, l'utilisateur doit vérifier s'il est permis de connecter cet équipement aux installations de télécommunications locales. L'utilisateur est averti que même la conformité aux normes de certification ne peut dans certains cas empêcher la dégradation du service.

Les réparations de l'équipement de télécommunications doivent être eVectuées par un service de maintenance agréé au Canada. Toute réparation ou modification, qui n'est pas expressément approuvée par Fujitsu, ou toute défaillance de l'équipement peut entraîner la compagnie de télécommunications à exiger que l'utilisateur déconnecte l'équipement de la ligne téléphonique.

AVIS: L'indice d'équivalence de la sonnerie (IES) du présent matériel est de 0.0. L'IES assigné à chaque dispositif terminal indique le nombre maximal de terminaux qui peuvent être raccordés à une interface téléphonique. La terminaison d'une interface peut consister en une combinaison quelconque de dispositifs, à la seule condition que la somme d'indices d'équivalence de la sonnerie de tous les dispositifs n'excède pas 5.

Pour assurer la sécurité, les utilisateurs doivent vérifier que la prise de terre du service d'électricité, les lignes télphoniques et les conduites d'eau métalliques sont connectées ensemble. Les utilisateurs NE doivent PAS tenter d'établir ces connexions eux-mêmes, mais doivent contacter les services d'inspection d'installations électriques appropriés ou un électricien. Ceci peut être particulièrement important en régions rurales.

T Series.book Page 77 Thursday, July 31, 2003 10:49 AM

UL Notice

This unit requires an AC adapter to operate. Use only UL Listed Class 2 Adapters with an output rating of 16 Vdc, with a current of 3.75 A.

AC Adapter output polarity:

The modem-to-telephone network connection must be a line cord using a minimum #26 AWG wire.

For Authorized Repair Technicians Only

- For continued protection against risk of fire, replace only with the same type and rating fuse.
- Danger of explosion if Lithium (clock) battery is incorrectly replaced. Replace only with the same or equivalent type recommended by the manufacturer. Dispose of used batteries according to the manufacturer's instruction.

T Series.book Page 78 Thursday, July 31, 2003 10:49 AM

8
Glossary

T Series.book Page 80 Thursday, July 31, 2003 10:49 AM

T Series.book Page 81 Thursday, July 31, 2003 10:49 AM

Glossary

AC Adapter
A device which converts the AC voltage from a wall outlet to the DC voltage needed to power your Tablet PC.

ACPI
Advanced Configuration and Power Interface

Active-Matrix Display
A type of technology for making flat-panel displays which has a transistor or similar device for every pixel on the screen.

AdHoc

A designation for wireless LAN network configuration. It indicates a form of communication limited to those personal computers which have wireless LAN function. For details, refer to "Ad hoc connection" on page 90.

ADSL

Asymmetric Digital Subscriber Line

Technology for transporting high bit-rate services over ordinary phone lines.

Auto/Airline Adapter
A device which converts the DC voltage from an automobile cigarette lighter or aircraft DC power outlet to the DC voltage needed to power your Tablet PC.

BIOS
Basic Input-Output System. A program and set of default parameters stored in ROM which tests and operates your Tablet PC when you turn it on until it loads your installed operating system from disk. Information from the BIOS is transferred to the installed operating system to provide it with information on the configuration and status of the hardware.

Bit
An abbreviation for binary digit. A single piece of information which is either a one (1) or a zero (0).

bps
An abbreviation for bits per second. Used to describe data transfer rates.

Boot
To start-up a computer and load its operating system from disk, ROM or other storage media into RAM.

Bus
An electrical circuit which passes data between the CPU and the sub-assemblies inside your Tablet PC.

Byte
8 bits of parallel binary information.

Cache Memory
A block of memory built into the micro-processor which is much faster to access than your system RAM and used in specially structured ways to make your overall data handling time faster.

CardBus
A faster, 32-bit version of the PC Card interface which offers performance similar to the 32-bit PCI architecture.

CD-ROM
Compact disk read only memory. This is a form of digital data storage which is read optically with a laser rather than a magnetic head. A typical CD-ROM can contain about 600MB of data and is not subject to heads crashing into the surface and destroying the data when there is a failure nor to wear from reading.

Channel

The frequency band of wireless LAN to be used in communications over wireless LAN or at the access point.

CMOS RAM
Complementary metal oxide semiconductor random access memory. This is a technology for manufacturing random access memory which requires very low levels of power to operate.

Command
An instruction which you give your operating system. Example: run a particular application or format a floppy disk.

Configuration
The combination of hardware and software that makes up your system and how it is allocated for use.

CRT
Cathode Ray Tube. A display device which uses a beam of electronic particles striking a luminescent screen. It produces a visual image by varying the position and intensity of the beam.

Data
The information a system stores and processes.

DC
Direct current. A voltage or current that does not fluctuate periodically with time.

Default Value
A pre programmed value to be used if you fail to set your own.

T Series.book Page 82 Thursday, July 31, 2003 10:49 AM

DHCP

Dynamic Host Configuration Protocol

A protocol used for automatically fetching communication parameters such as IP addresses. The side which assigns IP address is called DHCP server and the side that is assigned it is called DHCP client.

DIMM
Dual-in-line memory module.

DISE
Drive Image Special Edition.
A utility that allows you to restore the original factory image on your hard drive in the event of corruption or accidental erasure of files or applications.

Disk
A spinning platter of magnetic data storage media. If the platter is very stiff it is a hard drive, if it is highly flexible it is a floppy disk, if it is a floppy disk in a hard housing with a shutter it is commonly called a diskette.

Disk Drive
The hardware which spins the disk and has the heads and control circuitry for reading and writing the data on the disk.

Diskette
A floppy disk in a hard housing with a shutter.

DMA
Direct Memory Access

Special circuitry for memory to memory transfers of data which do not require CPU action.

DMI
Desktop Management Interface

A standard that provides PC management applications with a common method of locally or remotely querying and configuring PC computer systems, hardware and software components, and peripherals.

DNS

Domain Name System

A function that controls the correspondence of IP addresses assigned to a computer with the name. Even for those computers whose IP addresses are unknown, if their names are known, it is possible to communicate with them.

DOS
Disk Operating System (MS-DOS is a Microsoft Disk Operating System).

Driver
A computer program which converts application and operating system commands to external devices into the exact form required by a specific brand and model of device in order to produce the desired results from that particular equipment.

ECP
Extended Capability Port. A set of standards for high speed data communication and interconnection between electronic devices.

Encryption Key (Network Key)

Key information used to encode data for data transfer.

This device uses the same encryption key to encode and decode the data, and the identical encryption key is required between the sender and receiver.

ESD
Electro-Static Discharge. The sudden discharge of electricity from a static charge which has built-up slowly. Example: the shock you get from a doorknob on a dry day or the sparks you get from brushing hair on a dry day.

Extended Memory
All memory more than the 640KB recognized by MS-DOS as system memory.

FCC
Federal Communication Commission.

Floppy Disk
A spinning platter of magnetic data storage media which is highly flexible.

GB
Gigabyte.

Hard drive
A spinning platter of magnetic data storage media where the platter is very stiff.

I/O
Input/Output. Data entering and leaving your Tablet PC in electronic form.

I/O Port
The connector and associated control circuits for data entering and leaving your Tablet PC in electronic form.

IDE
Intelligent Drive Electronics. A type of control interface for a hard drive which is inside the hard drive unit.

T Series.book Page 83 Thursday, July 31, 2003 10:49 AM

IEEE 1394
Industry standard that allows you to connect between your Tablet PC and a peripheral device such as a digital camera. Also known as "Firewire" or "iLINK".

IEEE802.11a
One of the wireless LAN standards prescribed by the 802 committee in charge of establishing standards of LAN technology in IEEE (Institute of Electrical and Electronic Engineers). This standard allows communications at the maximum speed of 54 Mbps by using a 5 GHz band which can freely be used without radio communication license.

IEEE802.11b
One of the wireless LAN standards prescribed by 802 committee in charge of establishing standards of LAN technology in IEEE (Institute of Electrical and Electronic Engineers). It allows communications at the maximum speed of 11 Mbps by a band of 2.4 GHz (ISM band) which can freely be used without radio communication license.

IEEE802.11g
One of the wireless LAN standards prescribed by 802 committee in charge of establishing standards of LAN technology in IEEE (Institute of Electrical and Electronic Engineers). It allows communications at the maximum speed of 54 Mbps by a band of 2.4 GHz (ISM band) which can freely be used without radio communication license.

Infrared
Light just beyond the red portion of the visible light spectrum which is invisible to humans.

Infrastructure

A designation of Wireless LAN network configurations. It indicates a form of communication using an Access Point. For details, refer to "Infrastructure connection" on page 90.

IP Address

An address used for computers to communicate in the TCP/IP environment.

Current IPv4 (version 4) uses four values in the range between 1 and 255. (Example: 192.168.100.123).

There are two types of IP address: global address and private address.

The global address is an only address in the world. It is controlled by JPNIC (Japan Network Information Center). A private address is an only address in the closed network.

IR
An abbreviation for infrared.

IrDA
Infrared Data Association. An organization which produces standards for communication using infrared as the carrier.

IRQ
Interrupt Request

An acronym for the hardware signal to the CPU that an external event has occurred which needs to be processed.

KB
Kilobyte.

LAN
Local Area Network

An interconnection of computers and peripherals within a single limited geographic
location which can pass programs and data amongst themselves.

LCD
Liquid Crystal Display

A type of display which makes images by controlling the orientation of crystals in a crystalline liquid.

Lithium ion Battery
A type of rechargeable battery which has a high power-time life for its size and is not subject to the memory effect as Nickel Cadmium batteries.

LPT Port
Line Printer Port. A way of referring to parallel interface ports because historically line printers were the first and latter the most common device connected to parallel ports.

MAC Address

Media Access Control Address

A unique physical address of a network card. For Ethernet, the first three bytes are used as the vendor code, controlled and assigned by IEEE. The remaining three bytes are controlled by each vendor (preventing overlap), therefore, every Ethernet card is given a unique physical address in the world, being assigned with a different address from other cards. For Ethernet, frames are sent and received based on this address.

MB
Megabyte.

Megahertz
1,000,000 cycles per second.

T Series.book Page 84 Thursday, July 31, 2003 10:49 AM

Memory
A repository for data and applications which is readily accessible to your Tablet PC's CPU.

MHz
Megahertz.

MIDI
Musical Instrument Digital Interface. A standard communication protocol for exchange of information between computers and sound producers such as synthesizers.

Modem
A contraction for MOdulator-DEModulator. The equipment which connects a computer or other data terminal to a communication line.

Monaural
A system using one channel to process sound from all sources.

MPU-401
A standard for MIDI interfaces and connectors.

MTU
Maximum Transmission Unit

The maximum data size that can be transferred at a time through the Internet or other networks. You can set a smaller MTU size to obtain successful communication, if you have difficulty transferring data due to the fact that the maximum size is too large.

Network authentication
The method of authentication performed by wireless LAN clients to connect with the access point. There are two types: open system authentication and shared key authentication. The type of authentication must be set to each client and also coincide with the setting of access point with which to communicate. Network authentication is sometimes called authentication mode.

Network key
Data that is used for encrypting data in data communication. The personal computer uses the same network key both for data encryption and decryption, therefore, it is necessary to set the same network key as the other side of communication.

Network name (SSID: Security Set Identifier)
When a wireless LAN network is configured, grouping is performed to avoid interference or data theft. This grouping is performed with "Network name (SSID)". In order to improve security, the network key is set allowing no communication unless "Network name (SSID)" coincides with the network key.

NTSC
National TV Standards Commission. The standard for TV broadcast and reception for the USA.

Open system authentication
One of network authentication types for wireless LAN. Since there is no check of network key upon authentication, clients can connect to the access point without submitting correct network keys. However, in case of actual communications, the same network key must be set. Open system authentication is sometimes called Open key authentication.

Operating System
A group of control programs that convert application commands, including driver programs, into the exact form required by a specific brand and model of microprocessor in order to produce the desired results from that particular equipment.

Partition
A block of space on a hard drive which is set aside and made to appear to the operating system as if it were a separate disk, and addressed by the operating system accordingly.

PCI
Peripheral Component Interconnect

Self-configuring PC local bus. Designed by Intel, PCI has gained wide acceptance as a standard bus design.

PCMCIA
PCMCIA is a trademark of the Personal Computer Memory Card International Association. The Personal Computer Memory Card International Association is an organization that sets standards for add-in cards for personal computers.

Peripheral Device
A piece of equipment which performs a specific function associated with but not integral to a computer. Examples: a printer, a modem, a CD-ROM.

Pitch (keyboard)
The distance between the centers of the letter keys of a keyboard.

Pixel
The smallest element of a display, a dot of color on your display screen. The more pixels per area the clearer your image will appear.

POST
Power On Self Test. A program which is part of the BIOS which checks the configuration and operating condition of your hardware whenever power is applied to your Tablet PC. Status and error messages may be displayed

T Series.book Page 85 Thursday, July 31, 2003 10:49 AM

before the operating system is loaded. If the self test detects failures that are so serious that operation can not continue, the operating system will not be loaded.

PPPoE
Point to Point Protocol over Ethernet.

A protocol for Ethernet, using a Point-to-Point Protocol (PPP), which is used for connection on the phone line.

Program
An integrated set of coded commands to your computers telling your hardware what to do and how and when to do it.

Protocol

Procedures and rules use to send and receive data between computers.

- Method of sending and receiving data

- Process used to handle communication errors

Conditions required for communication are organized in procedures for correct transfer of information.

RAM
Random Access Memory. A hardware component of your Tablet PC that holds binary information (both program and data) as long as it has the proper power applied to it.

RAM Module
A printed circuit card with memory and associated circuitry which allows the user to add additional memory to the computer without special tools.

Reset
The act of reloading the operating system. A reset erases all information stored in RAM.

Restart
See Reset.

Resume
To proceed after interruption. In your Tablet PC this refers to returning to active operation after having been in one of the suspension states.

ROM
Read Only Memory. A form of memory in which information is stored by physically altering the material. Data stored in this way can not be changed by your Tablet PC and does not require power to maintain it.

SDRAM
Synchronous Dynamic Random Access Memory.

Serial Port
A connection to another device through which data is transferred one bit at a time on a single wire with any other wires only for control of the device not for transfer of data.

Shared key authentication
One of the network authentication types for wireless LAN. Upon authentication, the access point checks whether the same network key is set to the client. If the client uses a wrong network key or the network key itself is not set, authentication is unsuccessful, allowing no communications with the access point.

SMART
Self-Monitoring, Analysis and Reporting Technology (SMART) is an emerging technology that provides near-term failure predictions for hard drives. When SMART is enabled the hard drive monitors pre-determined drive attributes that are susceptible to degradation over time. If a failure is likely to occur, SMART makes a status report available so that the Tablet PC can prompt the user to back up the data on the drive. Naturally not all failures are predictable. SMART predictability is limited to those attributes which the drive can self-monitor. In those cases where SMART can give advance warning, a considerable amount of precious data can be saved.

SRAM
Static random access memory. A specific technology of making RAM which does not require periodic data refreshing.

SSID

Service Set Identifier

Specifies which network you are joining. Some systems allow you to specify any SSID as an option so you can join any network.

Standby
To make inoperative for a period of time. Your Tablet PC uses various suspension states to reduce power consumption and prolong the charge of your battery.

Status Indicator
A display which reports the condition of some portion of your hardware. On your Tablet PC this is an LCD screen just above the keyboard.

Stereo (audio)
A system using two channels to process sound from two different sources.

Subnet mask
TCP-IP network is controlled by being divided into multiple smaller networks (subnets). IP address consists of the subnet address and the address of each computer.

T Series.book Page 86 Thursday, July 31, 2003 10:49 AM

Subnet mask defines how many bits of IP address comprise the subnet address. The same value shall be set among computers communicating with each other.

SVGA
Super VGA.

S-Video
Super Video. A component video system for driving a TV or computer monitor.

System Clock
An oscillator of fixed precise frequency which synchronizes the operation of the system and is counted to provide time of day and date.

TCP/IP
Transmission Control Protocol/Internet Protocol.
A standard Internet protocol that is most widely used.

TFT
Thin Film Transistor – A technology for flat display panels which uses a thin film matrix of transistors to control each pixel of the display screen individually.

UL
Underwriters Laboratories – An independent organization that tests and certifies the electrical safety of devices.

USB
Universal Serial Bus.
Standard that allows you to simultaneously connect up to 127 USB devices such as game pads, pointing devices, printers, and keyboards to your computer.

VGA
Video Graphics Array. A video display standard originally introduced by IBM with the PS/2 series of personal computers.

VRAM
Video Random Access Memory. A memory dedicated to video display data and control.

WFM
Wired for Management is Intel's broad-based initiative to reduce the total cost of ownership (TCO) of business computing without sacrificing power and flexibility.

Wi-Fi Compatible
Wi-Fi (Wireless Fidelity) Identifies that the product has passed the interoperability test, supplied by the WECA (Wireless Ethernet Compatibility Alliance), which guarantees the interoperability of wireless IEEE 802.11 LAN products. For more information on the Wi-Fi standard, go to the WECA website at: www.wirelessethernet.com.

WLAN
Wireless Local Area Network. A wireless interconnection of computers and peripherals within a single limited geographic location which can pass programs and data amongst themselves.

Write Protect
Prevent alteration of the binary state of all bits in a storage media. Example: all information on a device such as a floppy diskette; a block of space in a storage media such as a partition of a hard drive; a file or directory of floppy diskette or hard drive.

XGA
Extended VGA.

Zip Drive
A 100MB or 250MB read/write removable media disk drive.

T Series.book Page 105 Thursday, July 31, 2003 10:49 AM

Index

A

AC
- adapter 33, 81
- indicator 15
- plug adapters 67

ACPI 81

Active-Matrix Display 81

ADSL 81

Anti-theft Lock Slot 12

Auto/Airline Adapter 33, 81

B

Battery 41
- alarm 41
- care 68
- charging indicator 16
- cold-swapping 42
- compartment 14
- conserving power 36
- dead 57
- faulty 57
- increasing life 68
- level indicators 15
- lithium ion battery 41, 83
- low 41
- problems 57, 58
- recharging 41
- replacing 42
- shorted 42
- suspend mode 41
- warm-swapping 42

Battery Release Latch 9

BIOS 81
- guide 34
- setup utility 34

Boot 81

Boot Sequence 34

Built-in Microphone 13

Button Icons 21

C

Cache Memory 81

CapsLock Indicator 16

CardBus 81

CD-ROM 81
- care 69

Changing Tablet PC Button Functions 22

Channels 81

Closed Cover Switch 10

CMOS RAM 81

Configuration Label 14

Conventions used 3

CRT 81

Cursor Keys 20

D

DC in Connector 9

DC Output Cable 33

DC Power Jack 13, 33

Default Value 81

Device Ports 48

DIMM 43, 82

DISE 63

Display Panel 10
- brightness 18
- opening 17
- problems 59

Display Panel Latch 10

Display Timeout 37

DMA 82

DMI 82

DNS 82

Docking Port 48

Drive Image Special Edition (DISE) 63

Drivers and Application Restore CD 64

E

ECP 82

Encryption Key (Network Key) 82

Enlarging the Backup Partition 64

Error Messages 61

ESD 82

Extended Memory 82

External Monitor Port 13, 49

F

Floppy Disk
- care 68

Function Key
- F10 20
- F3 20

T Series.book Page 106 Thursday, July 31, 2003 10:49 AM

F4 20
F5 20
F6 20
F7 20
F8 20
F9 20
FN 20
Fn 20

H

Hard Disk Drive
access indicator 16
problems 54
Hard Disk Timeout 37
Headphone Jack 9, 11, 49
Hibernate Mode 37
Hibernation Feature 37

I

IDE 82
IEEE 1394 83
Infrared Port 13, 48
Internal LAN Jack 48
IrDA 9, 48, 83
IRQ 83

K

Keyboard 10, 19
cursor keys 19
numeric keypad 19
problems 54
windows keys 19

L

LAN (RJ-45) Jack 13
LifeBook Security Application Panel
operating 23
passwords 22
uninstalling 24
LifeBook Security/Tablet PC Buttons 10, 21
LifeBook T Series Tablet PC specifications
additional 74
agency approval 74
display specifications 73
environmental 74
physical specifications 73, 74
power 74
LifeBook Tablet PC
unpacking 7
Local Area Network (LAN) 9

M

Memory
capacity 44
compartment 14, 43
installing 43
problems 55
removing 43
upgrade module 43
Microphone Jack 9, 11, 49
Microprocessor 73
MIDI 84
Modem 9, 12
Modem (RJ-11) Port 12, 48
Modem Result Codes 62
Mouse
problems 54
See Touchpad
MPU-401 84

N

NTSC 84
Numeric Keypad 19
NumLk Indicator 16

O

optional accessories 8
Additional Accessories 8
additional accessories 8
carrying cases 8
docking options 8
memory 8
power options 8
storage options 8

P

Parallel Port 84
PC Card
care 69
installing 45
problems 56
removing 45
slot 9, 11
PCI 84
PCMCIA 84
Pen. 10
calibrating the pen 27
replacing the tip 28
using the pen 27
Pen and Active Digitizer 27

T Series.book Page 107 Thursday, July 31, 2003 10:49 AM

Port Replicator 46
attaching 47
connector 14
detaching 47
problems 54
POST 84
Power
AC adapter 33
Auto/Airline adapter 33
failure 56, 57
indicator 15
management 36
off 38
on 34
problems 58
sources 33
Power Management 36, 37
Power On Self Test 34, 61
Preparation for wireless LAN connection 93

R

Registration 35
Re-Installing Individual Drivers and Applications . . 64
Restarting the system 37
Restoring a Backup Image 64
Restoring Your Pre-installed Software 63
RJ-11 48
RJ-45 . . . . . 9, 48
Rotation Hinge 10

S

ScrLk Indicator 16
SDRAM 14, 43
Security Indicator 16
Security Lock Slot 9
Serial Port 85
Setting Up LifeBook Security Panel 22
Shut Down 38
SMART 85
Smart Card Reader 45
Specifications 73
SRAM 85
SSID 85
Standby Mode 37
Status Indicator Panel 10, 15
Suspend 36, 85
Suspend/Resume Button 9, 12, 36
S-Video 86

T

Tablet Dock Port 9
Tablet PC
care 67
storing 67
traveling 67
TCP/IP 86
Touch Screen
clicking 28
double-clicking 28
Touchpad
clicking 10, 25
control adjustment 26
double-clicking 25
dragging 26
Troubleshooting 53
battery 57
built-in Speakers 54
hard drive 54
memory 55
mouse/keyboard 54
PC Card 56
port replicator 54
ports 56
power 56
video 59

U

Universal Serial Bus Port 48
USB 48
problems 56
USB Port 9, 13
Using the Active Digitizer 28
Using the System as a Tablet 17

V

Volume Control 29

W

Warm-swap 42
WFM 86
Wi-Fi Compatible 86
Windows
end user license agreement 35
Windows keys 19
Application key 19
Start key 19
Wireless LAN
Ad Hoc Mode 90
before using the wireless LAN 90
Broadcom wireless LAN 90

T Series.book Page 108 Thursday, July 31, 2003 10:49 AM

connection using Windows XP 93
for better communications 91
Infrastructure Mode 90
Intel PROSet wireless LAN 90
IP address information 102
other settings 99
setting of power-saving function 99
specifications 103
starting transmission 92
stopping transmission 92
troubleshooting 100
Wireless LAN On-Off Switch 9, 13
WLAN 86