Model APS-997LORA

Installation Manual

2 Way LCD Vehicle Security and Remote Start System

Table Of Contents:

Before You Begin	Page 2
Wire Harnesses Quick View	Page 3, 4, & 5
Mounting Of The Major Components	Page 6
8 Pin Power Harness Wiring	Page 7 - 8
26 Pin Accessory Input/Output Harness Wiring	Page 9 - 14
4 Pin GND, Siren & Parking Light Harness	Page 15
Door Lock Harness Wiring	Page 16 - 18
Telematic Port Information	Page 18
6 Pin Antenna Harness	Page 18
4 Pin Shock Sensor Harness	Page 19
Time Start Programming & Information	Page 19
Temperture Start Programming & Information	Page 19
DBI Port Information	Page 19
Diesel Engine Setting Information	Page 19
Diagnostics Access & Information	Page 20
Engine Monitoring Selections, (Voltage Tach, DBI, Hybrid,)	Page 20
Tach Programming	Page 20 & 28
Testing Your Installation Hood Pin Safety	Page 21
Manual Override Safety Testing and Operation	Page 21
Neutral Safety Switch Testing	Page 21 - 23
Dome Delay Learn Circuit	Page 24
Shock Sensor Adjusting	Page 24
Completing Your Installation	Page 25
Programming Transmitters	Page 26
Programming Alarm Feature Bank 2	Page 26 & 27
Programming Remote Start Feature Bank 3	Page 28 & 29
Circuit Wiring Layout	Page 30

PATENTED: www.voxxintl.com/company/patents

Before You Begin

PROFESSIONAL INSTALLATION IS STRONGLY RECOMMENDED

Roll down window to avoid locking the keys in the vehicle during installation

Avoid mounting components or routing wires near hot surfaces or near moving parts like the steering wheel as it may prevent proper operation of the vehicle

Tape or loom wires under the hood and dash for protection as well appearance

Use grommets when routing wires through metal surfaces to prevent chafing and shorting

Use a Digital Multi Meter for testing and verifying circuits. DO NOT USE A "TEST LIGHT" OR "COMPUTER SAFE PROBE" as these can set off air bags or damage sensitive vehicle computers and electronics

For technical support go to www.avxtech1.com
or call 1 800 225 6074

FCC COMPLIANCE
This device complies with part 15 of the FCC Rules. Operation is subject to the following two conditions:
(1) This device may not cause harmful interference, and
(2) this device must accept any interference received, including interference that may cause undesired operation.

This equipment has been tested and found to comply with the limits for a Class B digital device, pursuant to part 15 of the FCC Rules. These limits are designed to provide reasonable protection against harmful interference in a residential installation. This equipment generates, uses and can radiate radio frequency energy and, if not installed and used in accordance with the instructions, may cause harmful interference to radio communications. However, there is no guarantee that interference will not occur in a particular installation. If this equipment does cause harmful interference to radio or television reception, which can be determined by turning the equipment off and on, the user is encouraged to try to correct the interference by one or more of the following measures:
—Reorient or relocate the receiving antenna.
—Increase the separation between the equipment and receiver.
—Connect the equipment into an outlet on a circuit different from that to which the receiver is connected.
—Consult the dealer or an experienced radio/TV technician for help.

Warning!
Changes or modifications not expressly approved by the part responsible for compliance could void the use's authority to operate the equipment
NOTE:The manufacturer is not responsible for any radio or TV interference caused by unauthorized modifications to this equipment. Such modifications could void the user's authority to operate the equipment.

26 Pin Main Wiring Harness #1124302

1	Green/White	Dome Light Output (-)
2	LT. Blue	Ground While Running Output (-)
3	Black/White	Horn Output (-)
4	Purple	(+) Door Trigger input
5	Brown/Black	(+) Inhibit/Shutdown To Brake Switch
6	DK. Blue/Black	External Remote Start Trigger Input (-)
7	Orange/Black	(-) Parking Brake Input
8	Green/Yellow	Glow Plug Input
9	Brown	(-) Door Trigger Input
10	Green/Orange	Tachometer Input
11	DK Green	(-) Instant Trigger Input
12	NC	No Connection, Empty Cavity
13	LT. Green	(-) Trigger Input
14	DK. Blue	Channel 3 Trunk Release Output (-)
15	Green/Black	Channel 4 Output (-)
16	DK.Blue/Red	Channel 7 Output (-)
17	Black/LT.Green	Pulse After Start Output (-)
18	Black/Blue	Pulse Before Start Output (-)
19	Black/Red	Pulse After Shut Down Output (-)
20	Black/Yellow	Pulse During Crank Output (-)
21	LT. Blue/Black	Channel 6 Output (-)
22	LT.Blue/Green	Channel 5 Output (-)
23	Gray/Black	(-) Inhibit/Shutdown To Hood Switch
24	Orange	Start Inhibit Relay Control (-)
25	White/Blue	(-) Headlight Activation Output
26	Orange/White	N.O Start Inhibit Relay Control (-)

8 Pin Power / Start Harness #1124299

1 Blue	Ignition 1 (+)
2 Red/White	Battery 1 - 12V (+)
3 Green	Ignition 2 (+)
4 Pink	Ignition 3 Common Contact
5 Purple	Accessory (+)
6 Red	Battery 2 - 12V (+)
7 Yellow	Starter Output
8 Red/Black	Ignition 3 Normally Open Contact

4 Pin 2nd Main Harness #1124301

1 Black	Chassis Ground
2 White/Red	Parking Light Relay Input
3 White/Black	(+) Siren Output
4 White	Parking Light Relay Output

3 Pin Door Lock Output Harness #1122906

1 Red	(-) Door Lock Output
2 Green	(-) Door Unlock Output
3 Red/Black	(-) 2nd Door Unlock Output

4 Pin Shock Sensor Harness #1122591

1 Blue	Predetect
2 Green	Full Trigger
3 Black	Chassis Ground
4 Red	+ 12 Volts

6 Pin Antenna Harness #1124293

1 Red	+ 5 VDC
2 Green	RX
3 Black	Ground
4 Grey	Valet Enable
5 Blue	LED Cathode
6 Blue	TX

TRX17LORA
1181259

This unit is to be used in vehicles with **AUTOMATIC TRANSMISSIONS** only! Although this combination Alarm/Remote Start unit is a sophisticated system with many advanced features, **IT MUST NOT** be installed into a vehicle with a **manually operated transmission**. Doing so may result in serious personal injury and property damage!

INSTALLATION OF THE MAJOR COMPONENTS:

CONTROL MODULE: PART # 1365405

Select a mounting location inside the passenger compartment (up behind the dashboard). The mounting location selected must be within 24" of the ignition switch wiring harness to allow connection of the 6 pin main wiring harness. Be certain that the chosen location will not interfere with proper operation of the vehicle. Avoid mounting the module to or routing the wiring around the steering shaft/column, as the module or wiring may wrap around or block the steering wheel preventing proper control of the vehicle. The module will be secured after all wiring is completed which will allow complete access until the job is done. **Do Not Mount The Module In The Engine Compartment**, as it is not waterproof.

SIREN: PART# AS9903E

Select a location in the engine compartment that is not accessible from below the vehicle. The selected location must be clear of hot or moving parts within the engine compartment The siren must be pointed downward to prevent water retention and the open or flared end must be pointed away from and out of the engine compartment for maximum sound distribution. Before securing the siren, check behind your chosen location to assure that the mounting screws will not penetrate any factory wiring or fluid lines. Secure the siren mounting bracket using #8 self taping screws.

HOOD PIN SWITCH: PART # 1363699

The pin switch included in this package is intended for protecting the hood area of the vehicle. In all cases, the switch must be mounted to a grounded metal surface. When the pin switch is activated, (hood open), it will supply a ground to the input wire activating the alarm. In addition, the hood switch is required for the safety shut down of the remote start unit. If the vehicle is being worked on, this hood switch prevents the remote start activation even if the RF command to start is issued. **This switch must be installed in all applications. Failure to do so may result in personal injury or property damage.**

PUSH-BUTTONPROGRAM SWITCH/LED/RECEIVER/ANTENNA ASSEMBLY: PART # 1181259

The Superheterodyne Receiver Antenna Assembly provided with this unit allows routing from below the dash board for maximum operating range. Choose a location above the belt line (dashboard) of the vehicle for best reception. Special considerations must be made for windshield glass as some newer vehicles utilize a metallic shielded window glass that will inhibit or restrict RF reception. In these vehicles, route the antenna toward a rear window location for best reception. Secure the antenna with double stick tape provided.

SHOCK SENSOR: PART # AS9492a

Select a centrally located, solid mounting surface for the shock sensor that will allow consistent operation from all areas of the vehicle. The selected location must be within 18" of the control module to allow routing and connecting of the 4 pin harness. Secure the shock sensor to the chosen location using two #8 self tapping sheet metal screws. The sensor can also be secured to an existing dash brace using cable tie straps. Whichever mounting method is used be sure to allow access to the sensitivity adjustment potentiometer for use later in the installation.

STARTER INHIBIT RELAY: PART # 1363731

Select a mounting location within 12" of the ignition switch's low current start solenoid wire. Secure the relay to an existing harness in the chosen location using a cable tie around the relay's wiring harness. **CAUTION!** Do not wire tie the metal bracket to an existing wiring harness as vibration may cause chaffing and shorting damaging the factory wiring. If an existing harness is not available then secure the relay's metal mounting tab to an under dash metal brace with a #8 self tapping sheet metal screw. Wire the relay as per the diagram found later in this manual.

IMPORTANT!

DO NOT PLUG THE EIGHT PIN MAIN POWER HARNESS OR THE MULTI PIN INPUT / OUTPUT HARNESS INTO THE CONTROL MODULE UNTIL ALL CONNECTIONS TO THE VEHICLE HAVE BEEN MADE. AFTER SELECTING YOUR TARGET WIRES AS DEFINED BELOW, DISCONNECT THE NEGATIVE BATTERY CABLE FROM THE VEHICLE BATTERY PRIOR TO MAKING ANY CONNECTIONS.
Note: Do not remove the fuse holders from this wire harness. Fuses must be used and located as close as possible to the power source for adequate protection of the vehicle.

WIRING THE 8 PIN MAIN POWER HARNESS: PART # 1124299

Note: Do not remove the fuse holders from this wire harness. Fuses must be used and located as close as possible to the power source for adequate protection of the vehicle.

1 BLUE Wire: Ignition 1 Output

Connect this wire to the ignition 1 wire from the ignition switch. This wire will show +12 volts when the ignition key is turned to the "ON" or "RUN" and the "START" or CRANK" positions, and will have 0 volts when the key is turned to the "OFF" and "ACCESSORY" positions.
For Diesel Applications, this wire must be connected to the ignition circuit that powers the glow plugs if the vehicle requires glow plug pre-heating. (See selectable feature Bank 3 #12)

2 RED/WHITE WIRE: + 12 volt Battery 1 Source Fused 30A

Locate the vehicle battery wire(s) at the ignition switch. Verification: These wires will register voltage in all positions of the ignition switch. Connect the Red w/White wire to the vehicle's battery wire. This wire provides power for the control circuit as well as the ignition 1 and ignition 2 relays.

3 GREEN Wire: Ignition 2 Output

Connect this wire to the ignition 2 wire from the ignition switch. This wire will show + 12 volts when the ignition key is turned to the "ON" or "RUN" position and is some cases the "START" or CRANK" position. This wire will show 0 volts when the key is turned to the "OFF" and "ACCESSORY" positions.
NOTE: See programming information (Bank 3 Selection #7) concerning this wire to allow output during the "START" mode.

4 PINK Wire: Additional Ignition Output

This wire can be used as an additional + 12 Volt ignition output supplied by the Red/Black wire. This output can be selected to be on or off during the start cycle. (See feature bank 3 selection # 8) Connect this wire to the third ignition circuit in the vehicle and set the selectable feature # 8 of Bank 3 according to the way in which the vehicle's ignition switch operates.

5 PURPLE Wire: Accessory Output

Connect this wire to the Accessory wire from the ignition switch. This wire will show + 12 volts when the ignition switch is turned to the "ACCESSORY" or "ON" and "RUN" positions, and will show 0 volts when the key is turned to the "OFF" and "START" or "CRANK" positions.

6 RED WIRE: + 12 Volt Battery 2 Source Fused 30A

Locate the vehicle battery wire(s) at the ignition switch. Verification: These wires will register voltage in all positions of the ignition switch. Connect the Red wire to the vehicle's battery wire. This wire provides power for the start relay and the accessory relay.

7 YELLOW Wire: Starter Output

Careful consideration for the connection of this wire must be made to prevent the vehicle from starting while in gear. Understanding the difference between a mechanical and an electrical

Neutral Start Switch will allow you to properly identify the circuit and select the correct installation method. In addition you will realize why the connection of the safety wire is required for all mechanical switch configurations.
Failure to make this connection properly can result in personal injury and property damage.
In all installations it is the responsibility of the installing technician to test the remote start unit and ensure that the vehicle cannot start via RF control in any gear selection other than park or neutral.
In both mechanical and electrical neutral start switch configurations, the connection of the Yellow wire will be made to the low current start solenoid wire of the ignition switch harness. This wire will have +12 volts when the ignition switch is turned to the start (crank) position only. This wire will have 0 volts in all other ignition switch positions.
NOTE: This wire must be connected to the vehicle side of the starter cut relay (when used). For the electrical neutral switch configuration, this connection must be made between the starter inhibit relay, (when used) and the neutral safety switch as shown in the following diagram.
Failure to connect this wire to the ignition switch side of the of the neutral safety switch can result in personal injury and property damage.
SEE NEUTRAL START SAFETY TEST FOR FURTHER DETAILS.

YELLOW START WIRE DETAIL

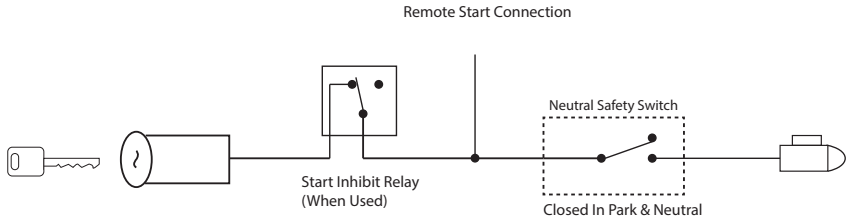

8 RED/BLACK Wire: + 12 Volts Input
Note: The Red/Black and Pink are dry contacts and may be used for negative switching when necessary.
Connecting the Red/Black to chassis ground will result in Pink being ground when the R/S is activated.
This input is to be connected to a separate, (Other than the wire Red or Red/White is connected to), constant on + 12 volt source which will supply + 12 volt power to the additional ignition output, (Pink), wire. Connect this wire to a separate + 12 Volt source.

WIRING CONNECTIONS: 26 Pin Accessory Input/Output Harness **PART # 1124299**

1 Green w/ White trace Wire: Entry Illumination Ground Output

This wire provides a 30 second ground output, (300 mA Max.), whenever the remote is used to disarm the alarm or to unlock the doors. It also provides a continuous pulsed output whenever the alarm is triggered. This wire should be connected to an external relay and wired to the vehicles interior entry lighting circuit whenever the optional Entry Interior Illumination feature is desired.

2 LT. Blue Wire: Ground Output While Running (-) 300mA

This wire provides a 300mA ground output that becomes active 1.5 seconds before the Remote Start Unit initializes and remains grounded while running plus an additional 2 seconds after the Remote Start Unit turns off. In all of the applications described below, a relay will be required.
The Light Blue wire can be used to accommodate the following situations:

A. Sensor By Pass:
If there is a Non Plug in Sensor used with the alarm system and it is not shunted during the Remote Start activation period, then vibration or noise from the running vehicle can cause the alarm to trigger. In this case, connect the Light Blue Wire to terminal #86 of a external relay. Connect terminal # 85 of the relay to a fused + 12 volt battery source. Cut the sensor's trigger wire and connect one end of the cut wire to terminal #30 and the other end of the cut wire to terminal #87a. Just before the Remote Start unit is activated, the relay contacts will open, preventing the sensor's operation until the Remote Start unit shuts off.

B. Additional Ignition Output:
Some vehicle's may require more than three ignition outputs to start and keep the vehicle's engine running. If this is the case, connect the Light Blue wire to terminal #86 of an external relay. Connect terminal # 85 to a fused + 12 volt source. Dependent on the vehicle's requirement, connect terminal #30, to a fused + 12 volt source, or to ground, and connect terminal 87 to the vehicle to supply the additional ignition source.

C. GM VATS Key Override:
If the vehicle has the General Motors VATS system installed, you will need to bypass the system while the vehicle is operating under the control of the Remote Start Unit. To Do This:

1. Measure the resistance of the resistor pellet on the ignition key then select a resistor within 5% of the key's value
2. Locate the pair of VATS wires in the vehicle, usually a pair of thin gauge wires running from the ignition switch to the VATS control module.

NOTE: These wires are typically White w/ Black trace and Violet w/ Yellow trace, however in later model Cadillacs, they are run through an orange sleeve, and are either both Black, both Yellow, or both White wires. Consult the factory service manual for additional information.

3. Connect the Light Blue Wire from the Remote Start Unit to terminal #86 of an external relay. Connect terminal #85 of the relay to a fused + 12 volt battery source.
4. Cut (#1) wire (as shown), and connect the ignition switch side of the cut wire to terminal #87a of the relay. Connect the other side of the (#1) wire to terminal #30.
5. Connect the previously selected resistor from terminal #87 to the second (#2) wire (as shown).

NOTE: The above information and following diagram is for the GM VATS system only.

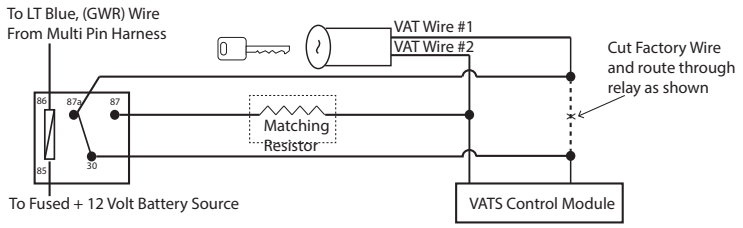

D. Anti-Grind Starter Circuit Connection:
This wire, when connected to a starter inhibit relay, as shown in the diagram below, will prevent the customer from engaging the starter while the vehicle is running under control of the remote start. The "E" series Alarm/Start units have the Anti-Grind feature built into the module controlled by the Orange Start Inhibit Output,,,the keyless start units do not and, if desired, will require this circuit.

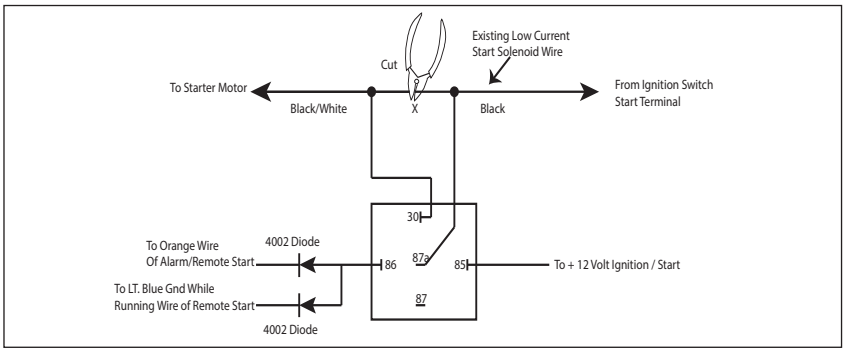

3 Black w/ White trace Wire: 300 mA Horn Output

The black w/ white trace wire is provided to beep the vehicle's horn. This is a transistorized low current output, and should only be connected to the low current ground output from the vehicle's horn switch. If the vehicle uses a + 12 VDC horn switch, then connect the black w/ white trace wire to terminal 86 of a 30Amp automotive relay, and connect relay terminal 85 to a fused + 12 VDC battery source. Connect relay terminal 87 to the vehicle's horn switch output, and connect relay terminal 30 to a fused + 12 VDC battery source.

4 Purple Wire: (+) Door Trigger Input

If the vehicle's door courtesy light switches + 12 volts when the door is opened, (Some Fords and some Imports), you must connect this wire to the positive output from one of the vehicle's door pin switches. In most cases, the Purple wire will need to be connected to only one door switch no matter how many doors the vehicle has as most door lighting circuits are wired in parallel. This wire will be shunted when remote starting the vehicle and will remain shunted, if active, while running under command of the remote start. If this wire is active when the system is armed, the siren will emit three chirps. When the zone clears, the siren will emit 1 chirp to confirm full arming.
Note: for vehicles with interior delay lighting see programming under title "Completing The Installation"

5 Brown w/ Black trace Wire: Positive Inhibit Input Plus Trigger When Armed

The Brown w/ Black Trace wire provides an instant shutdown for the Remote Start Control module whenever it gets + 12 volts also triggers the alarm when armed. If the Brake lights switch in the vehicle switches +

12 volts to the brake light circuit, connect the Brown w/ Black trace wire to the output side of the brake switch. This will allow the Remote Start to shut down if an attempt is made to operate the vehicle without the key while running under the control of the Remote Start. In most vehicles, in order to shift into gear, the brake pedal must be depressed. The brake input will in turn cause the remote start unit to shut off.

6 DK. Blue w/ Black trace Wire: External Trigger Input

The Dark Blue/Black trace wire allows the remote start unit to be activated from an external source. The intent of this wire is to allow the unit to be controlled from a "Car Connection" / or "CAR-LINK" paging system or similar device. When this wire receives a ground pulse, the unit will start the vehicle. Connect this wire to a ground pulsed output from the controlling circuit.

7 Orange w/ Black trace Wire: (-) Parking Brake Input

This wire is used only when the turbo timer mode, Bank 3, feature # 16 is selected ON. This input insures that the vehicle parking brake is applied whenever the vehicle is set up for and the turbo timer circuit is used. This input must switch to ground when the vehicle's parking brake is applied. Connect the Orange/Black wire to the negative output of the vehicle's parking brake switch.

8 Green w/ Yellow trace Wire: Diesel Wait To Start Input

The green/yellow wire, when connected to the wire that get + 12 volts during the glow plug preheat stage will delay the starter output until this wire drops the 12 volts. In other words, in a Diesel vehicle with glow plug preheat circuit, when the ignition is turned on, the vehicle will not crank until the glow plugs are hot enough to fire the atomized fuel oil when injected into the cylinder. By connecting this wire to the glow plug + 12 volt wire, when the remote start unit activates the ignition one output, the glow plug output also activates. The remote start sees the green/yellow with positive voltage and waits for this to go inactive(drop to 0 volts) before activating the starter motor. If this wire is not used or you have difficulty accessing the glow plug preheat circuit, you may elect to utilize the Diesel timed output as specified in Remote Start feature selection Bank 3 Feature #12. NOTE: If green/yellow is used, it will override or negate any setting of bank 3 feature #12.

9 Brown Wire: (-) Negative Door Trigger

If the vehicle's door courtesy light switches ground when the door is opened, (Most GMs and Imports), you must connect this wire to the negative output from one of the vehicle's door pin switches. In most cases the Brown wire will need to be connected to only one door switch no matter how many doors the vehicle has as most door lighting circuits are wired in parallel. This wire will be shunted when remote starting the vehicle and will remain shunted, if active, while running under command of the remote start. If this wire is active when the system is armed, the siren will emit three chirps. When the zone clears, the siren will emit 1 chirp to confirm full arming.

NOTE: for vehicles with interior delay lighting see programming under title "Completing The Installation"

10 Green w/ Orange trace Wire: Tachometer Input Signal

This wire will continually monitor the engine's tach rate while the unit is under power of the Remote Start module. This wire will be routed to the vehicle ECM tach input or through the firewall into the engine compartment and connect to the negative side of the ignition coil. This Remote Start unit learns the tach rate of the vehicle and in most cases will operate properly from one coil pack regardless of the number of cylinders. If the unit has difficulty sensing a single coil, this input can connect to an injector wire as an alternate.

NOTE: For Hybrid mode selection, Bank 3 feature selection 5, this connection is not required, the unit will start the vehicle and run the allotted time based on feature selection and crank duration.

11 DK. Green Wire: (-) Instant Trigger Input

The Dark Green wire is the instant on ground trigger input wire. This wire must be connected to the hood pin switch previously installed, and the trunk pin switch where used.
NOTE: This wire will be shunted when remote control channel 3 is accessed, (trunk release). This wire will remain shunted all the while there is ground present and for 5 seconds after the ground is removed. This allows the operator to open the trunk via the remote transmitter without having to first disarm the alarm system.

12 Empty Cavity / No Connection

13 LT. Green Wire: (-) Instant Trigger Zone 1

This is a instant on ground trigger input intended for the connection of optional triggering devices. The ground trigger output wire of motion detectors, microwave detectors, or glass break detectors, can be connected to this Light Green trigger input wire.

14 Dark Blue Wire: **(-)** 300mA Pulsed Channel 3 Output (Trunk)

The Dark Blue wire supplies a 300mA ground pulsed output whenever channel three of the receiver is accessed. Pressing the pre-programmed transmitter button for three seconds will access channel three. This is a low current output and must be connected to a relay to supply power to the trunk release or the circuit you wish to control. Connect the Dark Blue wire to terminal # 86 of a 30 amp automitive relay Connect terminal # 85 of the relay to a fused + 12 volt source. Connect the common, normally open, and normally closed contacts of the relay to perform the selected function of channel 3.

15 Green w/ Black trace Wire: 300mA Pulsed Channel 4 Output

The Green w/ Black Trace wire supplies a 300 mA switched output whenever channel four of the receiver is accessed. Pressing the pre-programmed transmitter button(s) will provide a 1 second pulse to channel four This is a low current output and must be connected to a relay to supply power to the device you intend to control. Connect Green w/ Black Trace wire to terminal #86 of a 30 amp automotive relay. Connect terminal #85 of the relay to a fused + 12 volt source. Connect the common, normally open, and normally closed contacts of the relay to perform the selected function of the channel 4 output.
NOTE: This wire also can be used for defrost activation as dictated by the setting of feature # 1 of Bank 3. Anytime the vehicle is running under control of the Remote Start and Channel 4 is activated, then dependent on the selection of this feature, Green/Black will be activated for a 1 second pulse, or for 10 minutes.
Note this wire will, as a defrost output, only operate when running under control of the remote start,,,it will not operate when the vehicle is running under the control of the ignition key.
When the key & remote start are off, the output will operate as indicated above.

16 DK. Blue w/ Red trace Wire : Delayed 300 mA PULSED OUTPUT / CHANNEL 7

The light blue/red wire pulses to ground via an independent RF channel from the keychain transmitter. This is a transistorized, low current output, and should only be used to drive an external relay coil.
WARNING: Connecting the light blue/red to the high current circuits, will damage the control module. Connect the light blue/green to terminal 86 of a 30 A automotive relay, and wire the remaining relay contacts to perform the selected function of channel 7.

17 Black w/ Light Green trace Wire: Pulsed Ground Output After Start

The Black w/ Light Green Trace wire will provide a 1 second 300mA pulsed ground output after the vehi-

cle is started under control of the remote start unit. Typically this wire will be used to re-lock the vehicle doors if the doors unlock automatically when the factory anti-theft system is disarmed. This wire will also activate when the transmitter is used to arm/lock the system. This output can be selected to operate in a number of different configurations as shown in selectable feature # 22 of Bank 3.

18 Black w Blue trace Wire: Pulsed Ground Output Before Start

The Black w/ Blue Trace wire will provide a 1 second 300 mA pulsed ground output 500mS before GWR becomes active as well as when the transmitter is used to disarm the system. Typical use for this output would be to disarm a factory theft deterrent system to prevent false triggering of the factory alarm when the remote start unit engages or when the system is used to unlock the doors. This will also activate when the transmitter is used to disarm/unlock the system
NOTE: This output can be selected to operate like the door unlock output as set in alarm feature setting #1 by selecting feature #19 in Bank 3 for 2 Chirps or any other pulse timing shown for that feature selection.

19 Black w/ Red trace Wire: Pulsed Ground Output After Shutdown

The Black w/ Red Trace wire will provide a 1 second 300 mA pulsed ground output 2 seconds after the remote starts GWR wire shuts down. This output will occur regardless of whether the circuit times out or is manually terminated. Typically this output will be used to re-lock the vehicle doors if the doors unlock automatically when the ignition circuit transitions to off. This output is selectable and can function as described in feature selection of bank 3 feature #22.

20 Black w/ Yellow trace Wire: Ground Output During Start (Crank)

The Black w/ Yellow Trace wire will provide a 300 mA ground output while the starter output of the remote start unit is active. This output can be used to activate the Crank Low/Bulb Test wire found in some GM vehicles. This wire is also referred to as the ECM wake up wire in some vehicles.
NOTE: The outputs above are low current outputs and must be used with a relay if the circuit's requirement is more than 300 mA. This output is also selectable and can preform an alternate function as shown in feature selection bank 3 Feature #20.

21 LT. Blue w/ Black trace Wire : (-) 300mA Selectable Output Channel 6

The light blue/green wire pulses to ground via an independent RF channel from the keychain transmitter. This is a transistorized, low current output, and should only be used to drive an external relay coil.
WARNING: Connecting the light blue/black to the high current circuits, will damage the control module. Connect the light blue/black to terminal 86 of a 30 A automotive relay and wire the remaining relay contacts to perform the selected function of channel 6.

22 LT. Blue w/ Green trace Wire : Delayed 300 mA PULSED OUTPUT / CHANNEL 5

The light blue/green wire pulses to ground via an independent RF channel from the keychain transmitter. This is a transistorized, low current output, and should only be used to drive an external relay coil.
WARNING: Connecting the light blue/green to the high current switched output of trunk release circuits, and some remote start trigger inputs, will damage the control module.
Connect the light blue/green to terminal 86 of a 30 A automotive relay, and wire the remaining relay contacts to perform the selected function of channel 5.

23 Grey w/ Black trace Wire: Negative Inhibit Input / Trigger When Armed

The Grey w/ Black Trace wire provides an instant shutdown for the Remote Start Control Module whenever it is grounded. This wire also trigger the alarm when armed when armed. Connect the Grey w/ Black trace wire to the hood pin switch previously installed. This wire must be routed through a grommet in the firewall and connected to the hood pin switch. If connecting to a factory hood pin switch, it is recommended that a double diode circuit be used to prevent feed back of one device to the other.
IMPORTANT! This connection is a safety wire and must be connected as shown and tested as specified. Failure to do so may result in personal injury or property damage. See detail of wiring in the following diagram. This wire may also be used if the vehicle brake light circuit switches ground to the brake lights. An isolation diode must be used for ground switched brake light circuits and must be connected to the output of the brake switch.

24 Orange Wire: 300mA (-) Ground When Armed Output

This wire provides a 300 mA ground output when the alarm circuit is armed to control the starter inhibit relay. Connect the Orange wire to terminal #86 (orange wire) of the relay provided. Connect terminal #85 (red wire) of the relay to an ignition wire in the vehicle that is +12 volts when the ignition switch is turned to the on and start positions and off when the key is off. Locate and cut the low current start

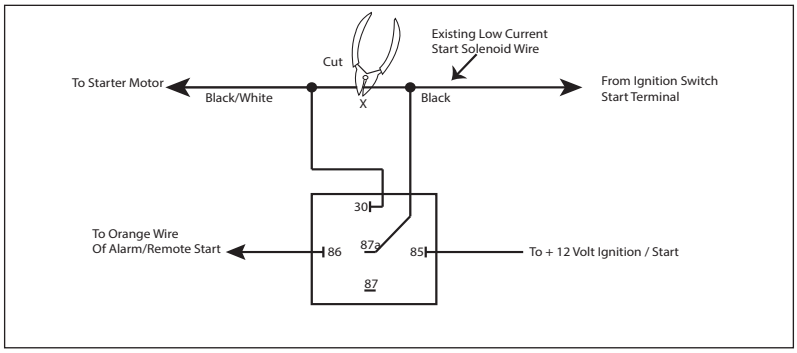

solenoid wire found at the vehicles ignition switch harness. This wire will have + 12 volts when the ignition key is moved to the start (crank) position and will have 0 volts in all other key positions. Connect one side of the cut wire to terminal #87a (Black wire) of the relay. Connect the other side of the cut wire to terminal #30 (White/Black wire) of the relay. See below for detail of wiring, also see Yellow Start wire detail for connection to vehicle considerations.

25 White w/ Blue trace Wire: 300mA (-) Ground Headlight Output

The White w/ Blue Trace wire is provided to operate the optional headlamp illumination feature of the system. This is a low current (300mA) output and must be connected to an external relay to control the high current switching circuit of the vehicle's headlamps. To use this option, connect the White /w Blue Trace wire to terminal # 86 of a 30 amp automotive relay. Connect Terminals #85 and # 30 to a fused + 12 Volts source with a current capability equal to or in excess of the factory headlamp fuse. Connect terminal # 87 of the relay to the switched + 12 volt wire feeding the vehicle's headlamp circuit.
NOTE: For ground switched headlamp circuits, Connect the White /w Blue Trace wire to terminal # 86 of the relay. Connect Terminal #85 to a fused + 12 Volts source. Connect terminal # 30 to a clean chassis ground. Connect terminal # 87 to the ground switched headlamp control wire in the vehicle.

26 Orange w/ White Trace Wire : 300 mA (-) Output When Disarmed

N. O. Starter Disable Circuit, **(Optional Relay Required).**
This wire is provided to control a normally open starter cut relay. Connect the orange/white wire to terminal 86 of the relay. Connect relay terminal 85 to an ignition wire in the vehicle that is live when the key is in the on and crank positions, and off when the key is in the off position. (This is typically an ignition 1 source), Cut the low current starter solenoid wire in the vehicle, and connect the car side of the cut wire to relay terminal 87. Connect the key side of the cut wire to relay terminal 30.

NOTE: This is a normally opened starter cut arrangement, when power is removed from the security system, the starter disable feature will remain operational, and the vehicle will not start. Audiovox does not recommend using the Orange w/ White trace wire to interrupt anything but the starting circuit of the vehicle.

4 Pin Additional Harness: Parking Light Flasher I/O Siren & Ground Part # 1284301

1 Black: Chassis Ground

Connect the Black wire to a known vehicle ground source or to a solid clean metal part of the chassis. Be certain to remove any paint or grease and secure this wire with a self tapping screw and ring terminal.

2 White w/ Red trace Wire: Parking Light Relay Input Wire

This wire is the common contact of the on board parking light flasher relay. If the vehicle you are working on has +12 volt switched parking lights, connect this wire to a fused + 12 volt source. (Max. 15 Amps)
NOTE: If the vehicle's parking lights are ground switched, connect this wire to chassis ground.

3 White w/ Black trace Wire: **(+)** Siren Output

This is the positive siren feed wire. Route this wire through a grommet in the firewall to the siren location. Connect the White w/ Black Trace wire to the Red wire of the Siren. Secure the Black wire of the Siren to a known chassis ground or solid clean metal surface.

4 White Wire: Parking Light Relay Output

This wire is the normally open contact of the on board parking light flash relay. Connect this wire to the vehicle's parking light feed wire. This is the wire that gets switched on, either (+) or (-), when the vehicle's parking light switch is activated.

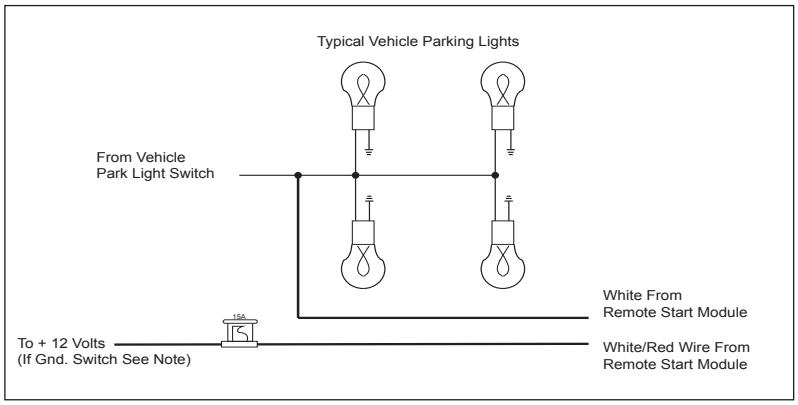

3 Pin Door Lock/Unlock Harness: (White Connector) 300mA Part # 1122906

1 Red Wire: (-) Lock

The Red wire provides a (-) Negative Pulse when the transmitter is used to lock the doors.

2 Green: (-) Unlock

The Green wire provides a (-) Negative Pulse when the transmitter is used to unlock the doors.

3 Red/Black: (-) Second Unlock

The Red w/Black trace wire will provide a (-) Negative Pulse when the transmitter unlock button is pressed a second time directly following a first unlock if the feature is selected at time of installation. This feature is used for second step unlock, (all doors unlock), in a two step unlock circuit. In this arrangement, Red is used to control the drivers door unlock relay, and the Red/Black will be used to control the unlocking of all other doors.

3 Wire Ground Switched Door Lock Circuits:

In this application, the Red wire of the door lock harness provides a ground pulse during the arming sequence, or pulsed ground lock output. Connect the Red wire to the low current ground signal wire from the factory door lock switch to the factory door lock relay.

The Green wire of the door lock harness provides a ground pulse during the disarming sequence, or pulsed ground unlock output. Connect the Green wire to the low current ground signal wire from the factory door unlock switch to the factory door unlock relay. See the following diagram for Wiring Detail.

3 WireGround Switched Door Lock/Unlock Wiring Detail

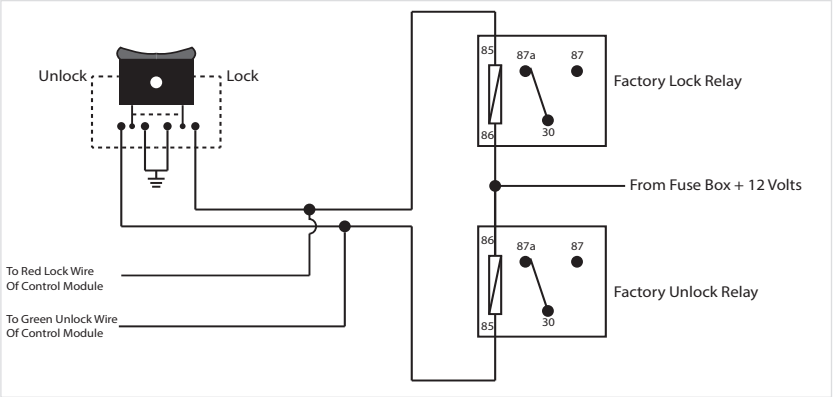

Driver Priority Unlocking:

For driver Priority Unlocking the Red/Black wire will be connected to unlock all doors, and the green will be used to unlock the drivers door. Please review the reference diagrams shown next and wire according to the vehicle's unlocking circuit.

Negative Switch Driver Priority

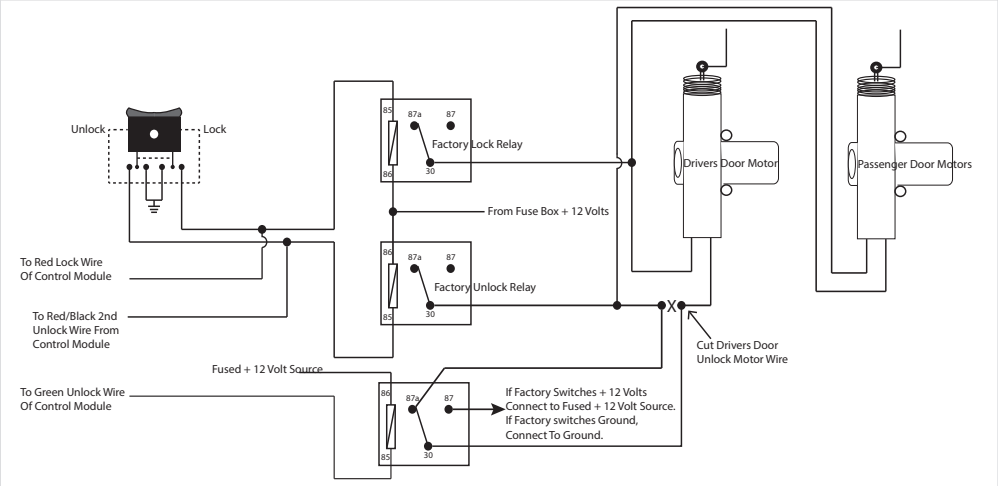

3 Wire Positive Switched Door Locks:

For three wire positive door lock circuits, you will have to invert the output of the door lock wires, with relays or with the "DLVI" Door Lock Voltage Inverter. The DLVI converts a negative pulse to a 1A positive pulse. When using the DLVI, cut the 3 Pin Green & Blue Connector, and splice the Blue form the DLVI to the Green Door unlock Wire of the 2 or 3 pin module's door lock harness, and splice the Green of the DLVI to the Red Door Lock Wire of the 2 or 3 pin module's door lock harness. Connect the Red From the DLVI to a fused 12 Volt Source. Connect the Blue (+) Unlock control output from the DLVI to the vehicles low current (+) Door Unlock Wire. Connect the Green (+) Lock control output fromthe DLVI to the vehicles low current (+) Door Lock Wire._See Below For Wiring Detail.

3 Wire Positive Switched Door Lock/Unlock Wiring Detail

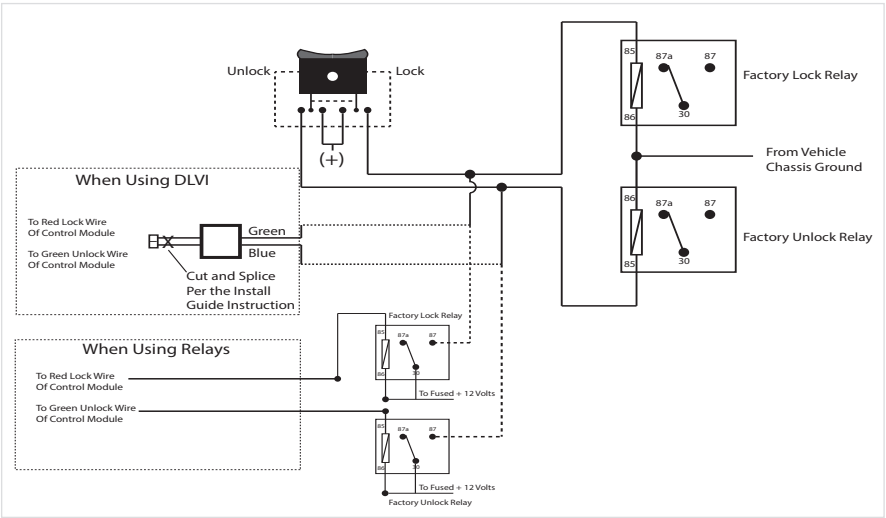

Positive Switch Driver Priority

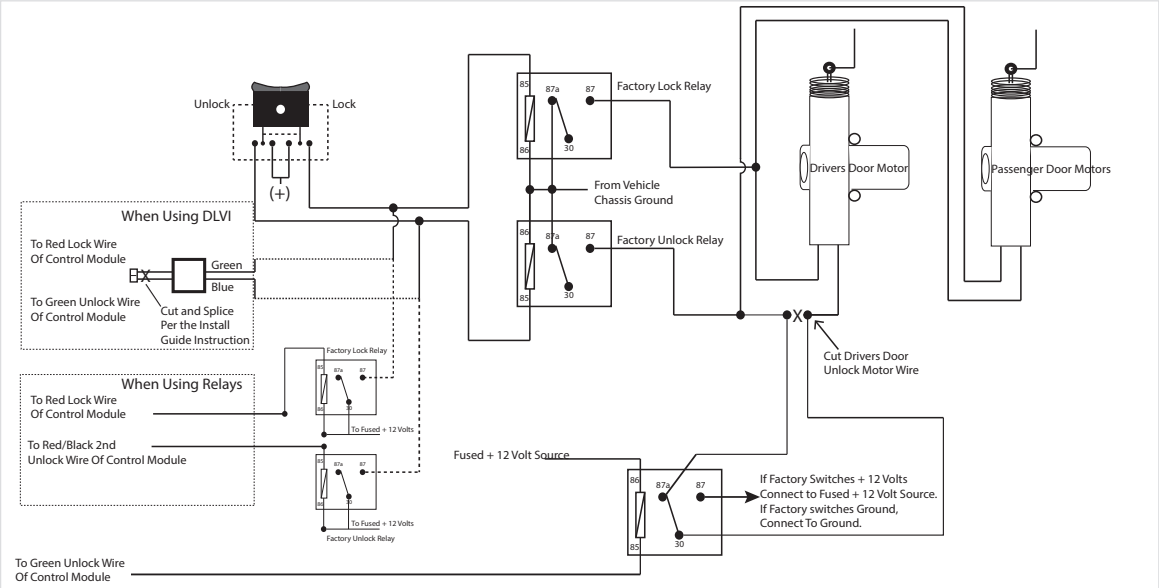

NOTE: Resistive Circuits, Multiplex Circuits As Well As 4 Wire Polarity Reversal and 5 Wire Alternating 12 Volt Door Lock Control Circuits

These applications require the use of additional components which may include relays, fixed resistor, a door lock interface, or a data module. You can search the vehicle @ www.avxtech1.com, Flash-It.com for vehcile specific information, or contact our tech service line or web site for additional information.

Additional Harnesses And Connectors For The System

4 Pin Upgrade Telematic Module: (Connector Port)

Red = + 5 Volts / Black = Ground / White = Data TX / Yellow = Data RX

Connect the 4 pin harness found in the Telematic one way or Carlink II kits to the mating port on the controlling circuit.

NOTE: If using the TWO WAY Telematic module, only Ground, TX, and RX are used on this port, the + 12 volt supply for the two way module must be sourced separately or the unit will not operate.

6 Wire Antenna/Transceiver Program Push-Button Switch/LED Connector: Part # 1124293

Plug the previously routed antenna connector from the antenna transceiver assembly into the mating connector of the control module. This connector supplies 5 volts, ground and RF data input and output, LED cathode, and Valet Enable to and from the antenna transceiver and the remote start module. Be certain this connector is firmly seated making good contact to the control unit.

4 Pin Shock Sensor: (White Connector) **Part # 1122591**

The Red (+12 volt), Black (ground), Blue (pre-detect) and Green (full trigger when armed) wires loaded into the white connector shell are the inputs/outputs of the shock sensor. Route the 4 wire harness from the shock sensor to the remote start control unit and plug the 4 pin white connector into the mating 4 pin connector shell of the control module.

NOTE: While operating under the control of the remote start unit the shock sensor will be shunted,(by-passed). Once the remote start shuts down, the shock sensor will be re-enabled.

TIMED START PROGRAM:

The Remote Start unit has the ability to start the vehicle automatically at timed intervals. This feature is useful in extremely cold climates where starting the engine is the only means to keep the battery charged and fluids warm. The operator has the option to have the unit start every 2 or 4 hours for a maximum of 48 hours. Factory preset is to start at 4 hour intervals. To select 2 or 4 hour automatic start timer:

1. Start By Holding the Push Button Switch found on the windshield mount receiver on.
2. While Holding the Push Button Switch Turn The Ignition Switch On Then Off

3a) Within 10 seconds of turning the ignition switch off, Release and then Push On and release the Push Button Switch 2 times holding it on the second time until the siren and or lights flash and chirp 2 times indicating that the 2 Hour Start Interval has successfully been set. or

3b) Within 10 seconds of turning the ignition switch off, (Step 2) Release and then Push On and release the Push Button Switch 4 times holding it on the fourth time until the siren and or lights flash and chirp 4 times indicating that the 4 Hour Start Interval has successfully been set.

NOTE: Once selected, 2 or 4, this timer interval will remain in memory until it is manually changed. To change, the above sequence will have to be followed.

TIMED START OPERATION:

To begin the start timer, within 10 seconds of turning off the ignition switch, activate the RF command to start 2 times. (Press the start button four times). The lights will flash and the siren will chirp 4 times. Indicating timed interval mode has been initiated. The vehicle will automatically start every 2 or 4 hours as programmed. To cancel the timed start mode start the vehicle either by RF or by the ignition key.

TEMPERATURE START:

When Temperature Start, (Bank 3 feature #13), is selected on, the temperature start mode can be activated from the transmitter by pressing the Lock + Option button simultaneously. Once activated, the unit will start 1 time if the vehicle temperature reaches "0* " and then will run the allotted time.

DIESEL ENGINE SETTINGS:

NOTE: When selecting Diesel operation, (Bank 3 Feature #12), over gasoline, the only change is to the ignition circuits. When Diesel is selected, the ignition circuits will power up 10, 15, or 20 seconds before the start circuit. The intent of this feature is to allow the glow plug warming required by some diesel engines. If your vehicle is a instant start diesel, it is not necessary to activate this feature.

ALSO: When selecting Diesel mode, be certain that the intended vehicle has a true tach reference and be certain to connect the tach input wire. Also note, if the "Diesel Wait to Start" input is connected,(Green/Yellow) this wire will take precedence over the Diesel selection of bank 3 feature 12.

4 PIN IN VEHICLE DATA BUS PORT (DBI Port) (Connector Port)

The 4 pin port located on the side of this module is for proprietary Audiovox data bus interface modules. These modules are used to access a variety of features in the vehicle which can be as simple as door trigger inputs, to more complex door locks outputs, or transponder interfaces for remote starting. DO NOT connect anything to this port other than the Audiovox IDB modules or damage to the Remote Start module will occur. All installation instructions for the IDB modules will be packaged with the individual component along with the proper 4 pin wiring harness requires to access the data transmit & receive as well as the proper voltage levels for the interface.

Monitoring The Vehicle's Engine: Program Feature #5 Bank 3)

There are 4 ways that the remote start monitors the engine running, one or the other must be selected for your application for the remote start to operate correctly.

1) VOLTAGE SENSE SETTING:

The unit will monitor the voltage level of the battery during remote start, wait for the voltage to drop while cranking, then look for the voltage level to go above the level it was before the vehicle began to crank which indicates the vehicle is running. Feature #14 of Bank 3 must be set for averaging or the voltage sense feature will not operate indicated by the parking lights flashing 7 times.

2) TACH RATE SETTING:

1. Turn the ignition key to the On position.
2. Press and release the valet/program push button switch 3 times.
3. Immediately turn the ignition key Off.
4. Press and hold the valet/program push button switch, then start the vehicle using the key.
5. When the unit senses the tach signal, the parking lights will begin to flash.
6. Release the valet/program pushbutton switch. The parking lights will turn on for three seconds to indicate that the learned tach signal is stored and the unit is out of the tach learn mode.

NOTE: If the unit fails to learn tach rate due to an improper tachometer connection or a poor tach source, the parking lights will not flash. To correct this situation, locate and connect the Green/Orange wire to the proper tach signal, and then repeat the tach learn routine.

3) DBI TACH SETTING:

Selecting this setting in the option menu indicates that you have a DBI module and have determined that a tach signal is available for the vehicle you are connecting to. The unit will look at the DBI data port for the tach signal. If the vehicle fails to start, or the unit flashes 7 times, recheck the DBI manual to insure that tach is available for your vehicle. If not the tach connection wire, Green/Orange must be used.

4) HYBRID SETTING:

Selecting this setting in the option menu allows for Hybrid vehicles. Also feature #14 of Bank 3 must be set for preset time or the Hybrid feature will not operate indicated by the parking lights flashing 7 times.

CRANK AVERAGING:

When Feature 14 Bank 3 is set for crank averaging, the remote start unit constantly monitors and learns the cranking patterns of the vehicle each time the car is started with the key. The vehicle must be started atleast 4 times with the key for the crank averaging circuit to begin it's monitoring the vehicle's engine.

DIAGNOSTICS:

Enter Bank 3 and turn on selectable feature # 10 as described on the front pages of this manual.

NOTE: Diagnostic mode is a temporary mode. Once you have accessed the diagnostic mode, the unit will pause for two seconds then begin to flash the last stored shut down code. This code will be displayed three times in succession, then the unit will automatically exit the diagnostic on mode.
The parking lights will flash a number of times indicating the reason for the last remote start shutdown. The light flash indications are as follows:

1 Flash	Run timer expired
2 Flashes	Low or no tach signal (RPM)
3 Flashes	Positive inhibit wire activation
4 Flashes	NA
5 Flashes	RF shutdown, Remote signal received, or manual start trigger wire reactivated.
6 Flashes	High tach signal (RPM)
7 Flashes	Tach signal has not been learned
8 Flashes	Negative inhibit wire

TESTING YOUR INSTALLATION:

WARNING!! The following procedure must be performed after the installation of any Remote Start Device. It is the responsibility of the installing technician to complete these tests. Failure to test the unit in the following manner may result in personal injury, property damage, or both.

HOOD PIN SAFETY SHUT DOWN:

The intent of the hood pin safety shut down is to prevent the Remote Start unit from being activated while a mechanic or vehicle owner is performing normal routine vehicle maintenance.
To test the integrity of this circuit:
1. With the drivers window in the down position, start the vehicle using the RF transmitter.
2. Reach inside the car and pull the hood release.
3. Raise the hood and confirm that the remote start unit shuts down. If the unit fails this test, recheck your pin switch connection to the Gray/Black wire of the Remote Start Unit

DO NOT RELEASE THIS VEHICLE TO THE CONSUMER UNTIL YOU CONFIRM THE OPERATION OF THE HOOD PIN SAFETY SHUT DOWN FEATURE.

REMOTE START OVERRIDE MODE / MANUAL SHUT DOWN:

The intent of the remote start override / manual shut down circuit is to allow the vehicle operator to prevent operation of the Remote Start Unit regardless of the RF transmitter operation.

To Enter The Remote Start Override Mode:

1) With the system disarmed/unlocked, and the ignition switch off Press and Hold the pushbutton switch located on the receiver unit on.

2) Turn the ignition switch on, off, on, off, on, off.

3) The LED begins to flash two short flashes followed by one long flashes and continues this pattern until returned to normal mode of operation.

The action above puts the unit into the Remote Start Override mode or vehicle service mode and will not start from the RF transmitter or any other input.

To Exit Remote Start Override Mode:

1) With the system disarmed, Press and Hold the PBLED on.

2) Turn the ignition switch on, off, on, off, on, off.

3) The LED turns off indicating that the R/S unit is fully functional one again.

DO NOT RELEASE THIS VEHICLE TO THE CONSUMER UNTIL YOU CONFIRM THE OPERATION OF THE MANUAL SHUT DOWN / ENABLE FEATURE.

NEUTRAL START SAFETY TEST:

The intent of the neutral start switch is to prevent the vehicle from starting while the gear selector is in any position other than Park, or Neutral. When installing a Remote Start Device, it is imperative that the Yellow Starter wire be connected to the ignition switch side of the Neutral Start Switch. Consideration for the placement of a starter inhibit relay is important as well and should be connected to the ignition switch side of the Yellow Start Wire.

To test the integrity of the Neutral Start Safety Circuit:

1) Set the vehicle parking brake.

2) Block the drive wheels to prevent vehicle movement.

3) Temporarily disconnect the Brown/Black positive shut down wire from the vehicle's brake switch.

4) Sitting in the vehicle, start the engine using the vehicle's ignition key.

5) Step on the brake pedal and shift the gear selector into reverse.

6) Allow the transmission to shift. When you feel the engine pull, do not move the gear selector just turn the ignition switch off. DO NOT attempt to remove the key.

7) Keeping the brake pedal depressed, activate the RF transmitter in an attempt to start the vehicle. The car should not start.

8) Repeat the above test this time move the gear selector to the drive position.

If the unit attempts to start, failing this test, recheck your Yellow Wire's connection. This wire must be connected to the ignition switch side of the Neutral Start Switch. If the vehicle you are working on does not have an Electrical Neutral Safety Switch, it will be necessary to reconfigure the Remote Starts Wiring to accommodate the vehicle. The information concerning the Mechanical Neutral Safety Switch provided below will help you to determine if the vehicle you are working on has this type of safety switch and will provide alternate wiring methods to accommodate this situation.

CAUTION! REMEMBER TO RECONNECT THE BROWN/BLACK NEUTRAL SAFETY WIRE TEMPORARILY DISCONNECTED IN STEP 3

MECHANICAL NEUTRAL SAFETY SWITCH CONSIDERATIONS:

Mechanical neutral safety switch configurations differ slightly in that they do not offer the same level of safety when installing a remote start device. Often when the ignition switch is turned off while the gear selector is in any position other than park or neutral, the mechanical function will not allow the key to be turned to the start position or be removed from the ignition cylinder. This configuration prevents mechanical operation while the vehicle is in gear but offers no consideration for electrical operation. Because of this potential problem, this installation requires the additional connection of a safety wire from the remote start device to the vehicle Park/Neutral ECM Input or the vehicle key in sensor. This connection will prevent remote start operation if the key is left in the ignition switch regardless of the gear selectors position.

DO NOT RELEASE THIS VEHICLE TO THE CONSUMER UNTIL YOU CONFIRM THE OPERATION OF THE MECHANICAL NEUTRAL SAFETY START FEATURE.

KEY IN SENSOR CIRCUITS:

If the vehicle you are working on does not have or you cannot locate the ECM reference wire, there are two alternatives available. Although not preferred, the vehicle Key In Sensor may be reconfigured to allow a margin of safety and will prevent the vehicle with a Mechanical Neutral Start Switch from starting in gear.
WE ADVISES THAT YOU MAINTAIN THE FACTORY CIRCUIT WHENEVER POSSIBLE. The following two circuits may be used only if the above circuit is not available.

NOTE: When completing an installation using either of the following key in sensor circuits, if the operator inserts the ignition key while the vehicle is running under the control of the Remote Start, the vehicle will shut down. This must be explained to the operator as it is in contrast to the normal operation of a vehicle utilizing an electrical neutral start switch and is inconsistent with the operators manual. Additional information concerning Key In Sensor methods 1 & 2 are listed below and should be reviewed before considering either alternative.
Method 1 will allow the safety required for the remote start unit and prevent the vehicle from starting while in any gear other than Park or Neutral while the key is in the ignition cylinder however, if the key is left in the ignition switch and the door is left opened, the added relay will be energized causing a 150mA drain on the battery.
Method 2 will allow the safety required for the remote start unit and prevent the vehicle from starting while in any gear other than Park or Neutral while the key is in the ignition cylinder however, the original factory key in chime module will not alert the owner that the key has been left in the ignition switch. In addition, this may also effect other warning tones such as the light on reminder.
These situations should be carefully considered before altering the vehicle's wiring and must be fully explained to the consumer.

METHOD 1

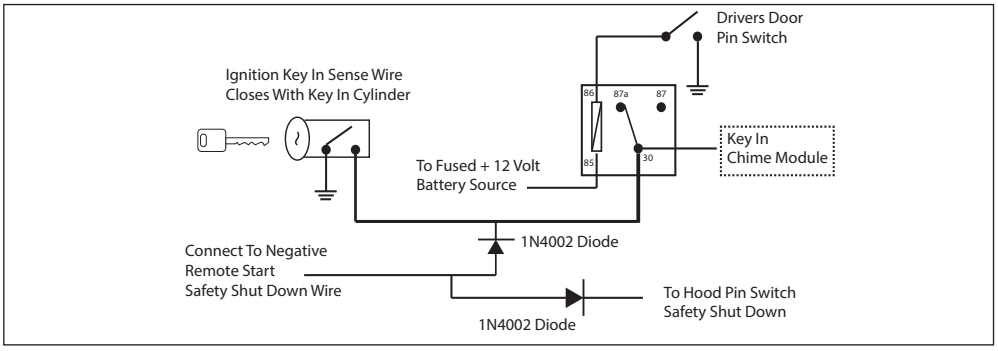

To connect to the key in sensor as shown in method 1:
1) Locate the control wire that connects the drivers door pin switch to the key in sensor switch.

2) Cut this wire and connect the ignition cylinder side to chassis ground.

3) Locate the key in sensor switch wire that connects the chime module to the ignition cylinder .

4) Cut this wire and connect the ignition cylinder side to terminal 30 of a P&B VF45F11 or equivalent relay.

5) Connect the cathode (striped) side of a 4002 series diode to this same wire, and connect the (non striped) side to the negative shut down safety wire (Gray / Black) of the Audiovox Remote Start Unit.

6) Connect terminal 86 of the relay to a fused +12 volt constant battery source.

7) Connect terminal 87 of the relay to the Chime Module side of the previously cut wire in step 4.

8) Connect terminal 85 of the relay to the Drivers Door side of the pin switch wire previously cut in step 2.

NOTE: A second 4002 series diode may be required to maintain the integrity of the hood open, shut down circuit. If this is the case, it must be installed as shown in the diagram above. The anode (Non Striped) side must be connected to the Gray/Black wire of the Remote Start Unit. The cathode (Striped) side must be connected to the hood pin switch. If the hood pin switch is also used for an alarm trigger input, be certain to use the dual diode set up shown earlier in this manual.

METHOD 2:

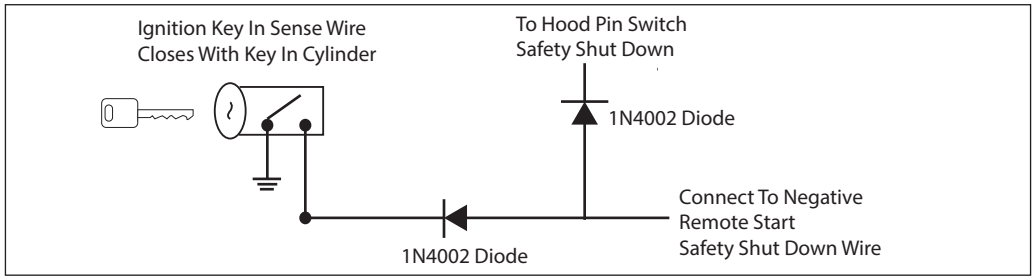

To connect to the key in sensor circuit as shown for method 2:

1) Locate the control wire that connects the drivers door pin switch to the key in sensor switch.
2) Cut this wire and connect the ignition cylinder side to chassis ground.

3) Locate the key in sensor switch wire that connects the chime module to the ignition cylinder .

4) Cut this wire and connect the ignition cylinder side to the Remote Start Negative Safety Shut down Wire Gray/Black, using a 4002 series diode as shown above.

NOTE: A second 4002 series diode may be required to maintain the integrity of the hood open, shut down circuit. If this is the case, it must be installed as shown in the diagram above. The anode (Non Striped) side must be connected to the Gray/Black wire of the Remote Start Unit. The cathode (Striped) side must be connected to the hood pin switch. IIf the hood pin switch is also used for an alarm trigger input, be certain to use the dual diode set up shown earlier in this manual.

AFTER THE CONNECTION OF THE NEUTRAL START SAFETY WIRE AS INDICATED IN ANY OF THE PREVIOUS ALTERNATE CONFIGURATIONS, THIS CIRCUIT MUST BE TESTED FOR PROPER OPERATION.

Retest by following the steps outlined in the NEUTRAL START SAFETY TEST section of the manual.

DOME DELAY LEARN FEATURE:

This unit has the ability to learn the dome light delay time, up to 60 seconds. If the vehicle has delay interior lights, and you wish to avoid three chirp, defect zone, indication normally associated with this type of interior light, we suggest you learn the interior light delay.

To learn the light delay, start with all doors closed:

1) Use the transmitter to Lock / Unlock / Lock / Unlock / Lock / Unlock / Lock, the system. The LED turns on solid to confirm the system entered the learn mode.

2) Immediately open and close the door of the vehicle to initiate the dome delay. The unit will monitor the door trigger input Positive, (Purple), and Negative, (Brown) when active. When the dome light turns off, the unit will add 2 seconds then exit the learn mode.

3) The LED will begin flashing the Armed indication indicating the unit has exited the learn mode and is armed.

ADJUSTING THE SHOCK SENSOR:

If used, the sensitivity of the pre - detect circuit is automatically set 30% less sensitive than the full trigger circuit.

1) Using a small screwdriver, gently turn the adjustment screw fully counterclockwise. (DO NOT over turn this screw. Maximum rotation for this adjustment is 270°). Close the hood and trunk lids, and arm the alarm. Wait 6 seconds for the accessories trigger zone to stabilize, then firmly strike the rear bumper with the side of a closed fist considering the amount of force required to break a window.
CAUTION: Never perform this test on the vehicle's glass, as you may break the window.

2) Turn the adjustment screw clockwise (increasing sensitivity) about ¼ turn and re-test.

3) Repeat this procedure until the alarm sounds. Ultimately, one firm strike to the rear bumper will cause the alarm to emit pre-detect warning tones.

WARNING ! Setting the sensitivity too high can cause false alarms due to noise vibrations from passing trucks and heavy equipment. To decrease sensitivity, turn the adjustment screw counter clockwise.

COMPLETING THE INSTALLATION:

After you have confirmed the operation of the Remote Start unit and tested all the safety features of the system:

1) Mount the control module up and behind the dash securing it in place with cable ties or screws. Be certain that the chosen mounting location will not inhibit any of the controls of the vehicle.
2) Securely harness and tie all wiring up and away from all hot and moving parts that they may come in contact with under the dash board or in the engine compartment areas.

CAUTION: Particularly avoid the area around the steering shaft and column, as wires can wrap around these mechanisms and impair the safe operation of the vehicle.

3) Apply the Caution Labels supplied with this kit to a conspicuous area in the engine compartment. Make sure to clean the surface before affixing the label.

4) Check the vehicle's wipers, lights, horn, etc.... to insure proper operation.

5) Replace all panels that were removed during installation, and retest the system.

6) Explain all activated features and safety systems associated with the Remote Start Unit installed. Also point out the location of the Push-Button LED Override/Valet switch to the customer and explain it's operation.

The transmitters are pre-programmed from the factory, If you find you need to program new or additional transmitters follow the instructions below.

PROGRAMMING BANK 1 (TRANSMITTERS):

1) Turn the ignition key to the on position.
2) Press and release the valet/programming switch 3 times (Siren Chirps Once).
3 Press the Lock Button of each transmitter you want programmed until you hear a chirp from the horn or siren.
4) Turn the ignition switch off. 1 Short followed by 1 Long Chirp indicates exit of programming mode.

The above action programs the Lock, Unlock, Start/Trunk, and Option 1 buttons of the system. For additional channel programming see the owners guide found within the literature bag packaged with this kit.

PROGRAMMING BANK 2 (ALARM FEATURES):

You can enter bank 2 from bank 1 by turning the ignition key off then on from step 4 of Bank 1, you will hear 2 chirps, or You can also go right to bank 2 by:

1) Turn the ignition key to the on position.

2) Press and release the valet/programming switch 3 times (Siren Chirps Once).

3) Turn the ignition key off then on you will hear 2 chirps.

4) Press the pushbutton switch once to advance to feature 1, twice to advance to feature 2, etc,,,then use the lock button of the transmitter to select the feature setting.

Example to set passive arming:
1) Turn the ignition key to the on position.

2) Press and release the valet/programming switch 3 times (Siren Chirps).

3) Turn the ignition key off, then on, 1Siren chirps 2 times.

4) Press the pushbutton switch six times to advance to features 6, Pass/Act Arm, then use the lock button of the transmitter to select two chirps "Passive Arm".

5) To exit the programming mode, turn the ignition key off ore than 6 seconds. Siren sounds a short chirp followed by a long Chirp.

New ,,The chirp and LED patterns have been changed to make it easier to determine what feature you are in. As well the feature bank will not time out until the ignition switch is off for more than 5 seconds. The change will ne noted when you get to feature # 11, the LED and chirp pattern will be 1 pause, 1,,#12 will be 1 pause, 2, #13 will be 1 pause 3, #22 will be 2 pause 2, etc,,,. This will reduce noise, and make it eaised for the installer to determing what feature they are up to.

Feature Bank Reset: If you wish to reset a feature bank to the default settings,,,from within that bank, press and hold the pushbutton on the receiver/antenna for 5 seconds or until a chirp / flash is heard from the system. This action resets the feature bank. The feature banks are reset individually so resetting bank 2 will not effect bank 3 & visa versa.

SELECTABLE FEATURES

The selectable features of this unit can be set manually as explained above, or online by using our web link. The Accessory VE-PROG kit will include the necessary cables to connect to your computer along with the web access information and application required to take advantage of this feature.
Factory default settings are indicated by **BOLD** text below.

Note : The method of manual override can either be selected to operate from the valet switch or operate by custom code. Custom Code programming is found in the owners guide. Be certain to place a check mark indicating the method used in the box located on the last page of the owner's manual.

NOTE: Manual programming Keyless Entry Models with no horn output will Flash the Parking Lights instead of chirp where chirp is indicated.
Also, No data will be indicated if a feature is not available for a particular model. The unit will enter the feature but no selection will be available.

Programmable Feature Bank 1 Is For Transmitter Programming See Transmitter Programming Guide.

Programmable Features Bank 2 Is Alarm Selectable Features:

Feature Selection	1 Chirp	2 Chirps	3 Chirps	4 Chirps	5 Chirps	6 Chirps
1st DoorL/UL	500 **mS**	3.5 Sec.	500mS L. Dbl. U/L	Dbl L. 500mS UL	Dbl L. Dbl UL	500mS/350mS ul
2nd Accy Lock	Auto Lock On	**Auto Lock Off**				
3rd Accy. UL	Auto UL Dr.	Auto UL All	**Auto UL Off**			
4th Headlights	On Arm	On Disarm	**On Both**	Off		
5th Passive Locks	Passive	**Active**				
6th Pass/Act Arm	Passive Arm	**Active Arm**				
7th Siren/Horn	**Siren/Horn**	Siren Only	Horn Only			
8th Horn Chirp	10mS	**16mS**	30mS	40mS	50mS	
9th O/R Method	Custom Code	**Valet**				
10th 2 Step U/L	On	**Off**				
11th Chp Del Tx	On	**Off**				
12th Trigger Circuits	**All On**	Doors Off	Hood/Trunk Off	All Off		
13th L/UL Poll	Not Available					
14th Aux Ch 5 Sel	**Pulse**	Push & Hold	10 Sec	20 Sec	Latch On/Off	Hold 3/S For O/P
15th Aux Ch 6 Sel	**Pulse**	Push & Hold	10 Sec	20 Sec	Latch On/Off	Hold 3/S For O/P
16th Aux Ch 7 Sel	**Pulse**	Push & Hold	10 Sec	20 Sec	Latch On/Off	Hold 3/S For O/P
17th Trigger Delay	**Not Available**					
18th Data Port Select	**DBI Protocol**	ADS Protocol				

If Programming via PC while connected to + 12 VDC you must manually enter the programming mode as shown below.:

Turn the ignition on

Press and release valet switch 3 times

turn ignition off then on, off then on, off then on, off then on to enter web/on-line feature selection Bank 5.

Siren chirps 5 times indicating access to feature program mode. Launch the application on your PC,,Connect the module via the USB to DBI harness and follow program prompts.

PROGRAMMING BANK 3 (REMOTE START):

You can enter Bank 3 from Bank 2 by turning the ignition key off then on after you've made the changes you wanted in Bank 2, (Siren Chirps 3 times), You can also go right to bank 3 by:

1) Turn the ignition key to the on position.

2) Press and release the valet/programming switch 3 times (Siren Chirps Once).

3) Turn the ignition key off then on. (Siren Chirps 2 Times)

4) Turn the ignition key off then on. (Siren Chirps 3 Times)

5) Press the pushbutton switch once to advance to feature 1, twice to advance to feature 2, etc,,,then use the lock button of the transmitter to select the feature setting.

Example to set engine input check to DBI Tach:

1) Turn the ignition key to the on position.

2) Press and release the valet/programming switch 3 times (Siren Chirps Once)

3) Turn the ignition key off, then on. (2 Chirps)

4) Turn the ignition key off then on. (3 Chirps)

5) Press the pushbutton switch five times to advance to features 5, Input Check, then use the lock button of the transmitter to select three chirps, "DBI Tach"

6) To exit the programming mode, turn the ignition key off more than 6 seconds. Siren sounds a short chirp followed by a long Chirp.

TACH RATE PROGRAMMING:

1. Turn the ignition key to the On position.

2. Press and release the valet/program push button switch 3 times.

3. Immediately turn the ignition key Off.

4. Press and hold the valet/program push button switch, then start the vehicle using the key.

5. When the unit senses the tach signal, the parking lights will begin to flash.

6. Release the valet/program pushbutton switch. The parking lights will turn on for three seconds to indicate that the learned tach signal is stored and the unit is out of the tach learn mode.

NOTE: If the unit fails to learn tach rate due to an improper tachometer connection or a poor tach source, the parking lights will not flash. To correct this situation, locate and connect the Green/Orange wire to the proper tach signal, and then repeat the tach learn routine.

Programmable Features Bank 3 Is Remote Start Selectable Features:

Feature Selection	1 Chirp	2 Chirps	3 Chirps	4 Chirps	5 Chirps	6 Chirps
1st Defrost Output	**Pulsed**	10 Mins				
2nd RF Start Chirp	Off	On	**On & Carfinder**			
3rd Run Time	5 Mins	**10 Mins**	15 Mins	20 Mins	45 Mins	60 Mins
4th Parking Lights	**On Steady**	Flashing				
5th Input Check	Voltage	**Tach**	DBI Tach	Hybrid		
6th Voltage Level	**>0.5V B4 Start**	< 0.5V B4 Start				
7th Ign. 2 Select	Off During Crank	**On During Crank**	Same As Accy.			
8th Ign. 3 Select	Off During Crank	**On During Crank**	Same As Accy	Same As Starter		
9th Accy. Relay	**Off During Crank**	On During Crank	Same As Starter			
10th Diagnostics	**Off**	On				
11th Crank Time	0.8 Sec	**1.0 Sec**	1.5 Sec	2.0 Sec	3.0 Sec	4.0 Sec
12th Gas/Diesel	**Gas**	Diesel 10	Diesel 15	Diesel 20		
13th Temp Start	**Off**	On				
14th Crank Averaging	**Averaging**	Preset Time	**Note:** When averaging, the engine must be started			
			4 times with the key	to be effective.		
15th R/S Shock	**Shunt Unit Clear**	Shunt R/S Cycle	Shunt From Tx			
16th Turbo Select	**Off**	3 Mins	5 Mins	10 Mins		
17th One or Two Press Start	**Two Press**	One Press				
18th Door Lock Control	**No Change**	Unlock Before & Lock After Start	Unlock Before Start	Lock After Start		
19th Alt O/P Before Start	**Single Pulse**	As Feat 1 Bank 2	350mS Pulse	500mS Pulse	800mS Pulse	
20th Alt O/P During Crank	**During Crank**	Gnd When Running	O/P Same as Ing 1	O/P Same As Accy		
21st Alt O/P After Start	**Pulse After Start**	Gnd When Running	O/P Same as Ign 1	O/P Same As Accy.	O/P During Crank	
22nd Alt O/P Aft Shut Dwn	**Pulse Aft Sht Dwn**	Gnd When Running	O/P Same as Ign 1	O/P Same As Accy.	O/P During Crank	
23rd Ign & Accy Relays	**No Pulse w/Unlock**	Pulse Ign, Accy, & GWR w/Unlock	Pulse Ign, Accy, & GWR w/Unlock Follow 1 S w/ASD Pulse			

Note : If feature #5 is set for Voltage or Hybrid, the unit must also have feature #14 set for averaging or the Pk. Lts. will flash 7 times and the unit not start.

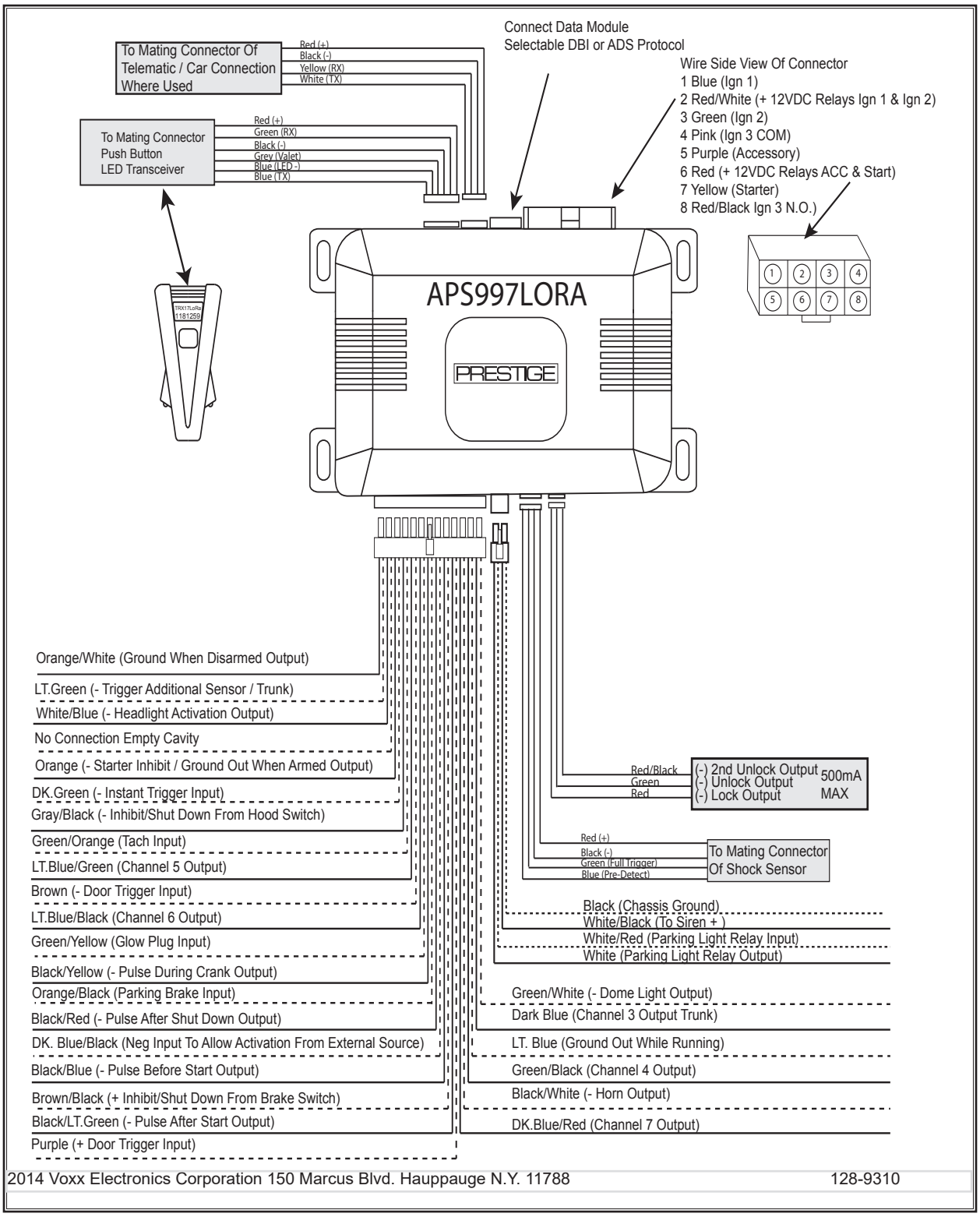

2014 Voxx Electronics Corporation 150 Marcus Blvd. Hauppauge N.Y. 11788 128-9310