3D Antenna Measurement Summary Report

REPORT NO.: ORBDKX-WTW-P24110275

MODEL NAME: AW311WLD

TESTED DATE: 2024.12.23

ISSUED DATE: 2025.1.3

APPLICANT : PRIMAX ELECTRONICS LTD.

ADDRESS : No. 669, Ruey Kuang Road, Neihu, Taipei, Taiwan, R.O.C.

ISSUED BY: Bureau Veritas Consumer Products Services (Hong Kong) Limited, Taoyuan Branch Mobile Communications Laboratory

ADDRESS: No.19, Hwa Ya 2nd Rd., Kwei shan Dist., Taoyuan City, Taiwan (R.O.C)

The client to claim product certification, approval, or endorsement by TAF, CTIA or any government agencies, should not use this report.

This report is governed by, and incorporates by reference, the Conditions of Testing as posted at the date of issuance of this report at http://www.bureauveritas.com/home/about-us/our-business/cps/about-us/terms-conditions/ and is intended for your exclusive use. Any copying or replication of this report to or for any other person or entity, or use of our name or trademark, is permitted only with our prior written permission. This report sets forth our findings solely with respect to the test samples identified herein. The results set forth in this report are not indicative or representative of the quality or characteristics of the lot from which a test sample was taken or any similar or identical product unless specifically and expressly noted. Our report includes all of the tests requested by you and the results thereof based upon the information that you provided to us. Measurement uncertainty is only provided upon request for accredited tests. Statements of conformity are based on simple acceptance criteria without taking measurement uncertainty into account, unless otherwise requested in writing. You have 60 days from date of issuance of this report to notify us of any material error or omission caused by our negligence or if you require measurement uncertainty; provided, however, that such notice shall be in writing and shall specifically address the issue you wish to raise. A failure to raise such issue within the prescribed time shall constitute your unqualified acceptance of the completeness of this report, the tests conducted and the correctness of the report contents.

RELEASE CONTROL RECORD

REPORT NO.	REASON FOR CHANGE	DATE ISSUED
ORBDKX-WTW-P24110275	Original release	2025.1.3

TABLE OF CONTENTS

GENERAL INFORMATION 3

1. Test Methods 4
2. Description of the anechoic chamber: 4
3. Test Equipment List 5
4. Measurement Uncertainty 5
5. Testing Setup Photograph 5
6. Antenna Radiation Performance 5
7. 3D Antenna Patterns 6

APPENDIX. EUT photographs 9

GENERAL INFORMATION

APPLICANT:	PRIMAX ELECTRONICS LTD.
MANUFACTURER:	PRIMAX ELECTRONICS LTD.
MODEL NAME:	AW311WLD
ANTENNA TYPE:	PIFA
MEASUREMENT STATNDARD	ANSI/IEEE Std 149 2021

TESTED BY : Leo Chen / Engineer **, DATE :** 2025.1.3

PREPARED BY : Johnny Liu / Supervisor **, DATE :** 2025.1.3

APPROVED BY : Ken Chan / Manager **, DATE :** 2025.1.3

1. Test Methods

The Antenna Gain Test is performed according to The ANSI/IEEE Std 149 12.3.1 Antenna Gain (Small size (< 42cm) Linear Polarization Antennas), using a two-axis support device and one fixed measurement antenna. The EUT is positioned along the required MAPS centerline fixture holder. The EUT is then stepped between 0 and 180 degrees along the theta axis in 15-degree increments. At each theta position, the phi axis is stepped from 0-360 degrees in 15-degree increments. Data is recorded using the Network analyzer for both theta and phi polarizations at each position. Depending on the protocol, an appropriate filter is used in the EMQuest software to process the data. Upon completion of the test, test results (angular dependent EIRP) is calculated at each measurement point and the required value is automatically calculated. This test procedure is repeated for frequency and configuration as required.

2. Description of the anechoic chamber:

Length: 7.32 m
Width: 3.66 m
Height: 3.51 m

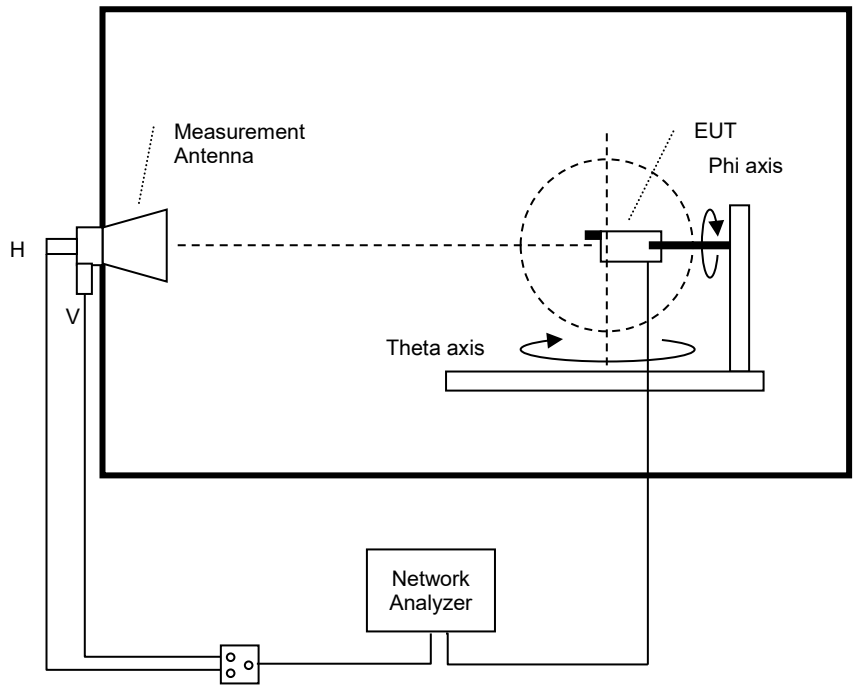

3. Test Equipment List

TYPE OF EQUIPMENT	MODEL NUMBER	SERIAL NUMBER	CALIBRATION DUE DATE
(OTA3-HY) ETS Anechoic Chamber	ETS-Lindgren AMS-8500	CT0000411-1132	N/A
Measurement Software	ETS-Lindgren EMQuest V1.14 build 31654	1281	N/A
Multi-Axis Positioning System	ETS-Lindgren 2090-OPTI	00086248	N/A
Switch Control	Agilent 3499A	MY42005285	N/A
Network Analyzer	Agilent E5071C	MY46104190	2025/5/29

4. Measurement Uncertainty

Expanded Uncertainty for Measurement (k=2 or 95.45% Confidence Level) at Passive antenna test over frequency range:.

FREQUENCY RANGE	MEASUREMENT UNCERTAINTY
780~2200 MHz	1.40 dB
2200~3000 MHz	1.72 dB
3000~6000 MHz	3.86 dB

5. Testing Setup Photograph

Please refer to another document - Test Setup and EUT photographs. (APPENDIX.)

6. Antenna Radiation Performance

Frequency (MHz)	2405	2439	2474
Average Gain (dBi)	-5.35	-4.78	-4.60
Peak Gain (dBi)	0.18	0.84	1.09
Efficiency (%)	29.17	33.27	34.66

7. 3D Antenna Patterns

2405MHz

Total

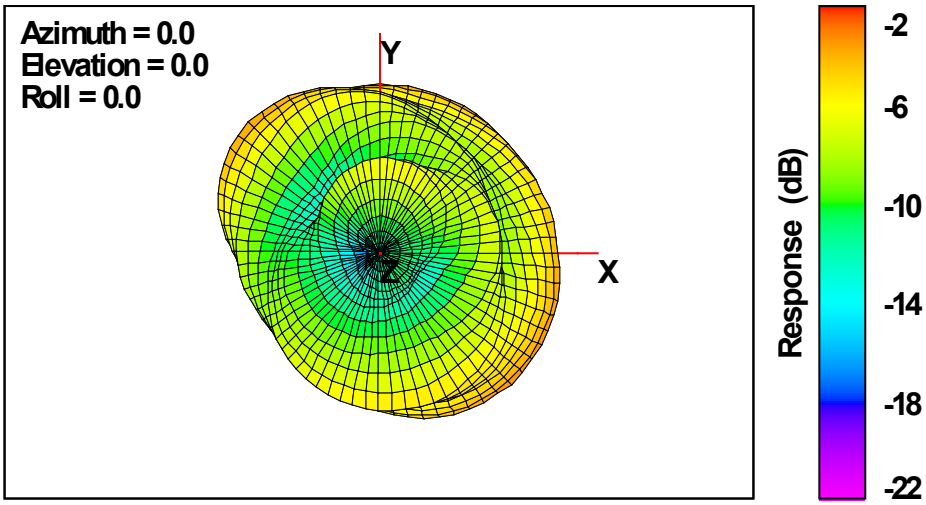

Total

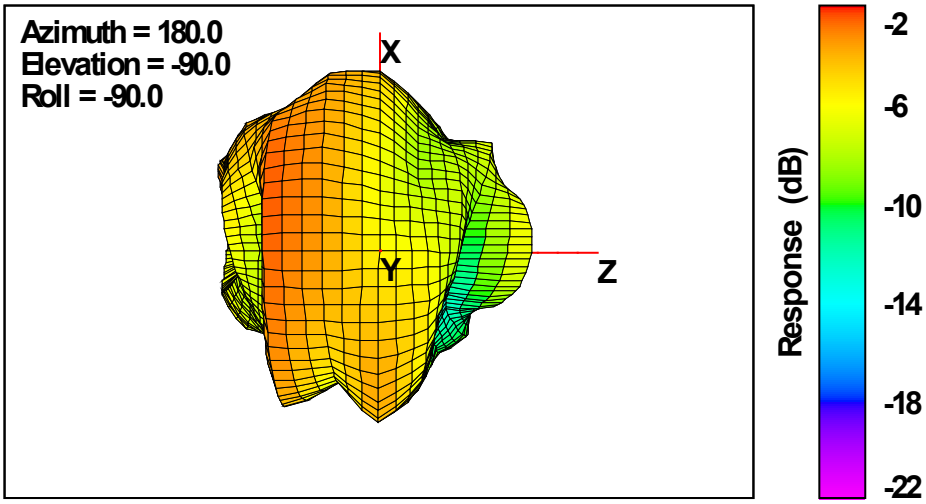

Total

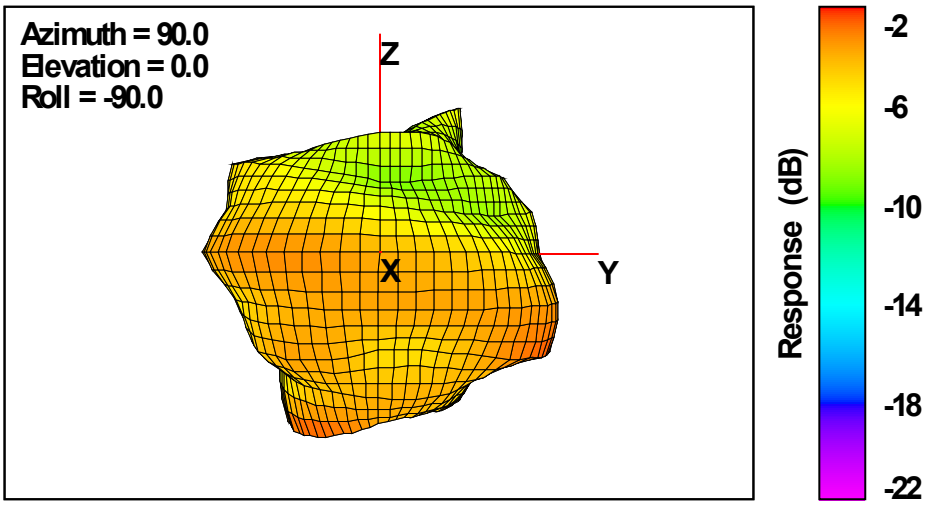

2439MHz

Total

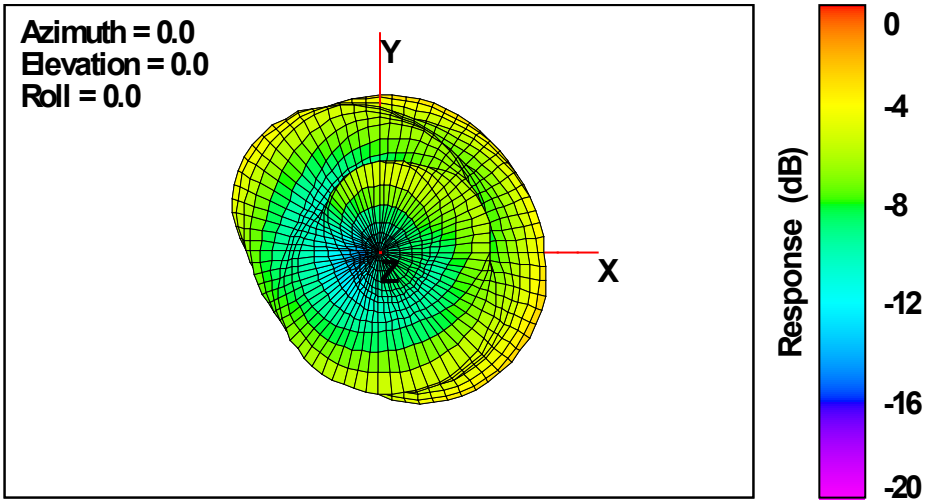

Total

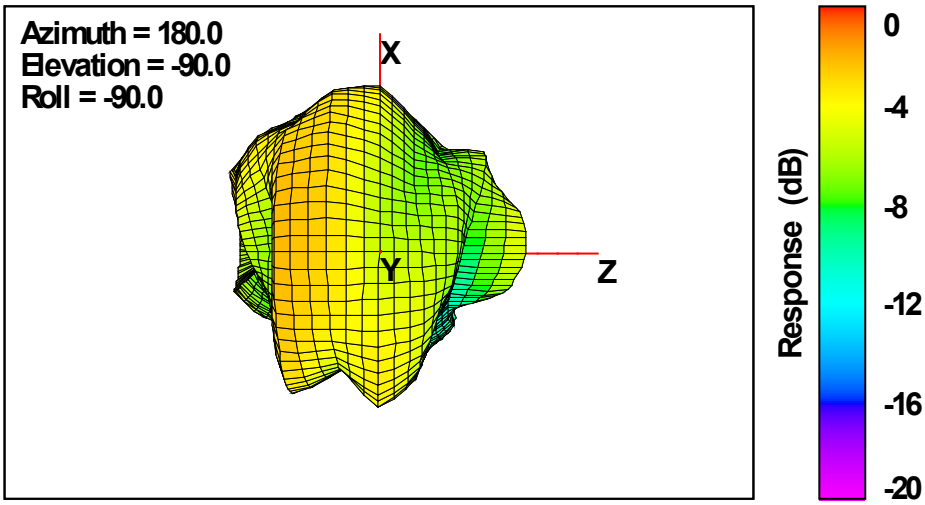

Total

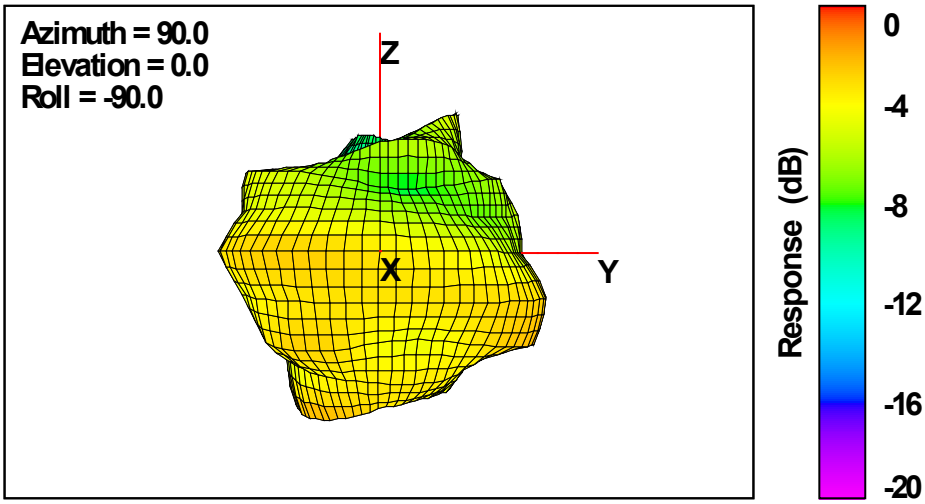

2474MHz

Total

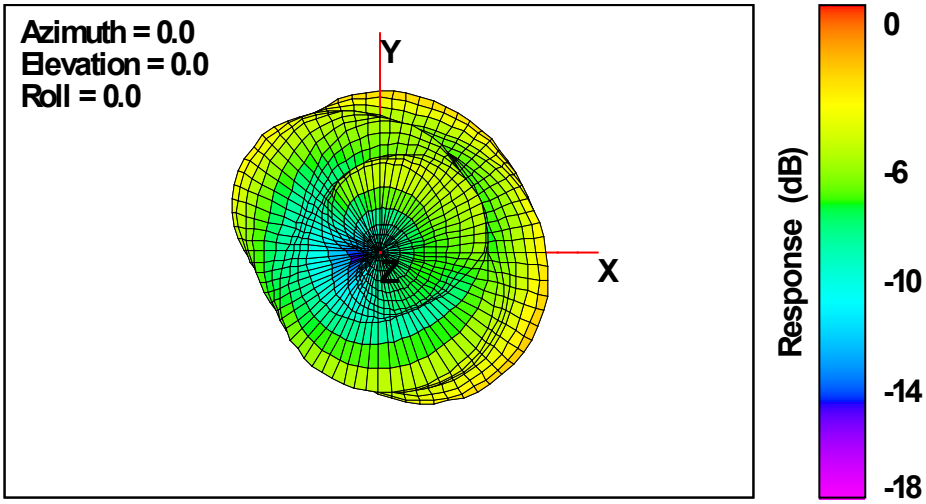

Total

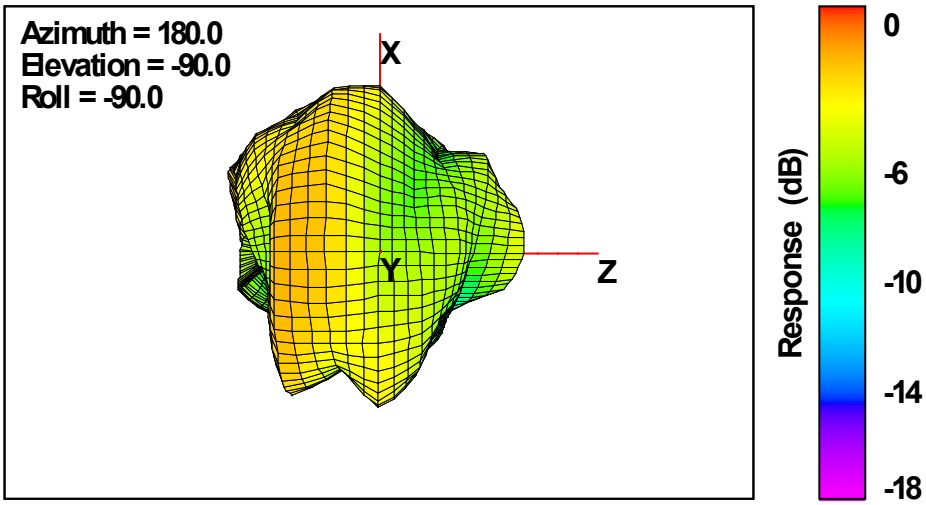

Total

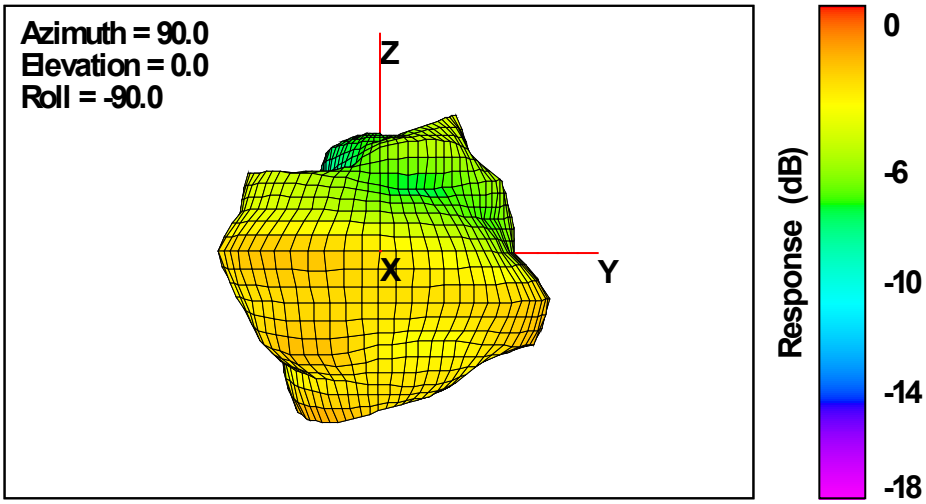

APPENDIX. EUT photographs

Please refer to another document - Test Setup and EUT photographs. (APPENDIX.)