T889 Power Amplifier

UHF FM 800-870MHz

Issue 100 October 1995

M889-00-100

Head Office
New Zealand

Tait Electronics Ltd
558 Wairakei Road
P.O. Box 1645
Christchurch
New Zealand
Phone: 64 3 358-3399
Fax: 64 3 358-3636

Australia

Tait Electronics (Aust) Pty Ltd
275 Toombul Road
Northgate 4013
P.O. Box 679
Virginia
Queensland 4014
Australia
Phone: 61 7 3260-7799
Toll Free: 1800 077-112
Fax: 61 7 3260-7990

Canada

Tait Mobile Radio Inc.
Unit 5, 158 Anderson Avenue
Markham
Ontario L6E1A9
Canada
Phone: 1 905 472-1100
Toll Free: 1 800 890-8248
Fax: 1 905 472-5300

France

Tait France Sarl
2 Avenue de la Cristallerie
92 316 Sèvres, Cedex
France
Phone: 33 1 41 14-05-50
Fax: 33 1 41 14-05-55

Germany

Tait Mobilfunk GmbH
Willstätterstraße 50
D-90449 Nürnberg 60
Germany
Phone: 49 911 96 746-0
Fax: 49 911 96 746-79

New Zealand

Tait Communications Ltd
Unit 4, 75 Blenheim Road
P.O. Box 1185
Christchurch
Phone: 64 3 348-3301
Fax: 64 3 343-0558

Singapore

Tait Electronics (Far East) Pte Ltd
4 Leng Kee Road
SIS Building #05-11A
Singapore 159088
Phone: 65 471-2688
Fax: 65 479-7778

United Kingdom

Tait Mobile Radio Ltd
Ermine Business Park
Ermine Road
Huntingdon
Cambridgeshire PE18 6YA
United Kingdom
Phone: 44 1480-52255
Fax: 44 1480-411996

USA

Tait Electronics (USA) Inc.
9434 Old Katy Road
Suite 110
Houston
Texas 77055
USA
Phone: 1 713 984-8684
Toll Free: 1 800 222-1255
Fax: 1 713 468-6944

 Copyright TEL

About This Manual

Scope

This manual contains general, technical and servicing information on the T889 Power Amplifier.

Revision Control

Each page in this manual has a date of issue. This is to comply with various Quality Standards, but will also serve to identify which pages have been updated and when. Each page and its publication date is listed in the “List of Effective Pages”.

Any portion of text that has been changed is marked by a vertical line (as shown at left) in the outer margin of the page. Where the removal of an entire paragraph means there is no text left to mark, an arrow (as shown at left) will appear in the outer margin. The number beside the arrow will indicate how many paragraphs have been deleted.

2

The manual issue and revision status are indicated by the last three digits of the manual IPN. These digits start at 100 and will increment through 200, 300, etc., as the manual is updated and republished, e.g:

1 0 0

issue status — revision status

The last two digits are used for manuals published in an updatable ring binder format and do not apply to this manual.

PCB Information

PCB information is provided for all current issue PCBs, as well as all previous issue PCBs manufactured in production quantities, and is grouped according to PCB. Thus, you will find the parts list, grid reference index (if necessary), PCB layouts and circuit diagram(s) for each individual PCB grouped together.

Errors

If you find an error in this manual, or have a suggestion on how it might be improved, please do not hesitate to contact the Technical Writer, Radio Infrastructure Division, Tait Electronics Ltd, P.O. Box 1645, Christchurch, New Zealand.

Technical Information

Any enquiries regarding this manual or the equipment it describes should be addressed in the first instance to your nearest approved Tait Dealer or Service Centre. Further technical assistance may be obtained from the Customer Support Group, Radio Infrastructure Division, Tait Electronics Ltd, Christchurch, New Zealand.

Updating Equipment And Manuals

In the interests of improving performance, reliability or servicing, Tait Electronics Ltd reserve the right to update their equipment and/or manuals without prior notice.

Copyright

All information contained in this manual is the property of Tait Electronics Ltd. All rights are reserved. This manual may not, in whole or part, be copied, photocopied, reproduced, translated stored or reduced to any electronic medium or machine readable form without prior written permission from Tait Electronics Ltd.

Ordering Tait Service Manuals

Service Manuals should be ordered from your nearest Tait Branch or approved Dealer. When ordering, quote the Tait Internal Part Number (IPN) and, where applicable, the version.

Date Of Issue

IPN M889-00-100 T889 Power Amplifier Service Manual

Issue 100 published October 1995

Table Of Contents

This manual is divided into seven Sections as listed below. There is a detailed table of contents at the start of each Section.

Section	Title
1	General Information
2	Circuit Operation
3	Introduction To Servicing
4	Initial Tuning & Adjustment
5	Fault Finding
6	Installation
7	PCB Information

List Of Effective Pages

The total number of pages in this Manual is 64, as listed below.

Page	Issue Date	
1	02/10/95	
2	02/10/95	
3	02/10/95	
4	02/10/95	
5	02/10/95	
6	02/10/95	
1.1	02/10/95	
1.2	blank	
1.3	02/10/95	
1.4	02/10/95	
1.5	02/10/95	
1.6	02/10/95	
2.1	02/10/95	
2.2	blank	
2.3	02/10/95	
2.4	02/10/95	
2.5	02/10/95	
2.6	02/10/95	
3.1	02/10/95	
3.2	blank	
3.3	02/10/95	
3.4	02/10/95	
3.5	02/10/95	
3.6	02/10/95	
3.7	02/10/95	
3.8	02/10/95	
3.9	02/10/95	
3.10	02/10/95	
4.1	02/10/95	
4.2	blank	
4.3	02/10/95	
4.4	02/10/95	
5.1	02/10/95	
5.2	blank	
5.3	02/10/95	
5.4	02/10/95	
5.5	blank	(fold-out)
5.6	02/10/95	(fold-out)
5.7	02/10/95	
5.8	02/10/95	
5.9	02/10/95	

Page	Issue Date	
5.10	blank	
6.1	02/10/95	
6.2	blank	
6.3	02/10/95	
6.4	02/10/95	
6.5	02/10/95	
6.6	blank	
7.1.1	02/10/95	
7.1.2	blank	
7.1.3	02/10/95	
7.1.4	02/10/95	
7.2.1	02/10/95	
7.2.2	02/10/95	
7.2.3	02/10/95	
7.2.4	02/10/95	
7.2.5	02/10/95	
7.2.6	blank	
7.2.7	02/10/95	
7.2.8	02/10/95	
7.2.9	02/10/95	(fold-out)
7.2.10	02/10/95	(fold-out)
7.2.11	02/10/95	(fold-out)
7.2.12	02/10/95	(fold-out)

Copyright TEL

1 General Information

This section provides a brief description of the T889 PA, along with detailed specifications and a list of variants available.

The following topics are covered in this section.

Section	Title	Page
1.1	**Introduction**	**1.3**
1.2	**Specifications**	**1.4**
1.2.1	Introduction	1.4
1.2.2	General	1.4
1.3	**Versions**	**1.6**

Copyright TEL

1.1 Introduction

The T889 is an FM base station power amplifier designed for single or multichannel operation within the frequency range 800 to 870MHz. The output power capability is 20 to 100W.

The PA comprises a broad band, two stage drive amplifier whose output is split to drive four separate output stages. The outputs from these final stages are then recombined and filtered before being fed to the output socket. This type of balanced output stage offers two advantages over single ended types:

- improved intermodulation performance in the presence of high signal levels from adjacent transmitters;
- enhanced reliability: if one of the four output stages fails, the transmitter can still produce half its rated power.

VSWR and thermal protection is incorporated into the basic design, while monitoring and alarm signals are available for both forward and reverse power. The output power is adjustable from the front panel.

The main PCB is mounted directly on a die-cast chassis/heatsink. For long-term reliability, four high quality, low loss Teflon PCBs are sweated to the main PCB in areas of high RF current. Extensive use is also made of the latest surface mount technology.

Forced air cooling for the heatsink is provided on the T889 by a fan, which is activated whenever the transmitter is keyed. Thermal sensors will also activate the fan automatically if the internal temperature reaches an unacceptable level.

The T889 has a width of 120mm, occupying a double module in a Tait rack shelf (T99-770) which will accommodate up to seven standard modules to give an attractive and convenient installation.

1.2 Specifications

1.2.1 Introduction

The performance figures given are minimum figures, unless otherwise indicated, for equipment tuned with the maximum switching band and operating at standard room temperature (+22°C to +28°C).

Where applicable, the test methods used to obtain the following performance figures are those described in the EIA specification. However, there are several parameters for which performance according to the CEPT specification is given.

Details of test methods and the conditions which apply for Type Approval testing in all countries can be obtained from Tait Electronics Ltd.

1.2.2 General

Power Output:		
Rated Power	..	90W
Range Of Adjustment	..	20 to 100W (typical)
Duty Cycle Rating:	..	90W continuous to +60°C
Intermodulation (PA with output isolator)	..	-70dBc or -40dBi[1] with 25dB isolation & interfering signal of -30dBc
Mismatch Capability:		
Ruggedness	..	infinite VSWR
Stability	..	5:1 VSWR (all phase angles)
Supply Voltage:		
Operating Voltage	..	10.8 to 16V DC
Standard Test Voltage	..	13.8V DC
Polarity	..	negative earth only
Polarity Protection	..	diode
Supply Current:		
Standby	..	50mA
Transmit	..	27A (20A typical @ 850MHz)

1. dBi denotes the level of the intermodulation product relative to the interfering signal.

 Copyright TEL

Spurious Emissions:

Conducted	- Transmit	..	-36dBm to 1GHz
			-30dBm to 4GHz
	- Standby	..	-57dBm to 1GHz
			-47dBm to 4GHz
Radiated	- Transmit	..	-36dBm to 1GHz
			-30dBm to 4GHz
	- Standby	..	-57dBm to 1GHz
			-47dBm to 4GHz

Dimensions:

Height	..	191mm
Width	..	120mm
Length	..	340mm

Weight: .. 3.5kg

1.3 Versions

Description	Version		
	10		
800-870MHz	●		

Copyright TEL

2 Circuit Operation

This section provides a basic description of the circuit operation of the T889 PA.

The following topics are covered in this section.

Section	Title	Page
2.1	**Introduction**	**2.3**
2.2	**RF Circuitry**	**2.3**
2.3	**Control Circuitry**	**2.4**
2.3.1	Power Control	2.5
2.3.2	Driver Power Level	2.5
2.3.3	Thermal Protection	2.5
2.3.4	Forward And Reverse Power Alarms	2.5
2.3.5	Forward And Reverse Power Metering	2.6
2.3.6	Fan Control Circuitry	2.6

Figure	Title	Page
2.1	High Level Block Diagram	2.3
2.2	Control Circuitry Block Diagram	2.4
2.3	Fan Control Logic Diagram	2.6

Copyright TEL

2.1 Introduction

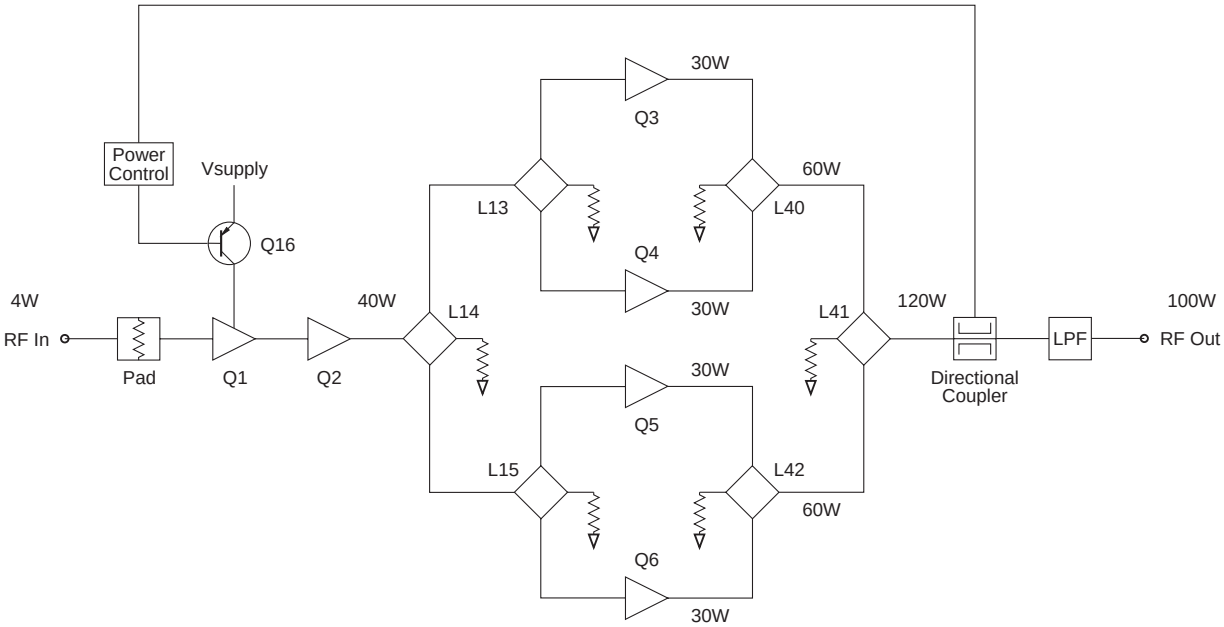

Figure 2.1 High Level Block Diagram

The T889 comprises a three stage RF power amplifier with extensive control circuitry. The final stage is composed of four transistors (Q3, Q4, Q5 & Q6) whose outputs are combined to provide the rated output power.

The configuration of each of the main circuit blocks may be seen on a functional level in Figure 2.1.

2.2 RF Circuitry

The driver stage of the T889 consists of a two stage transistor amplifier (Q1, Q2) which delivers a minimum of 40W. This signal is split via three 3dB couplers (L13, L14 & L15) and used to drive the four final amplifiers (Q3, Q4, Q5 & Q6). These outputs are recombined by L40, L41 & L42 and passed to the antenna socket via the directional coupler and low pass filter.

The directional coupler senses forward and reflected power, which is rectified (D1, D2) and passed to the control circuitry for metering, alarm and power control purposes.

Power control is via a series pass transistor (Q16), which controls the supply voltage on the collector of the driver transistor (Q1).

2.3 Control Circuitry

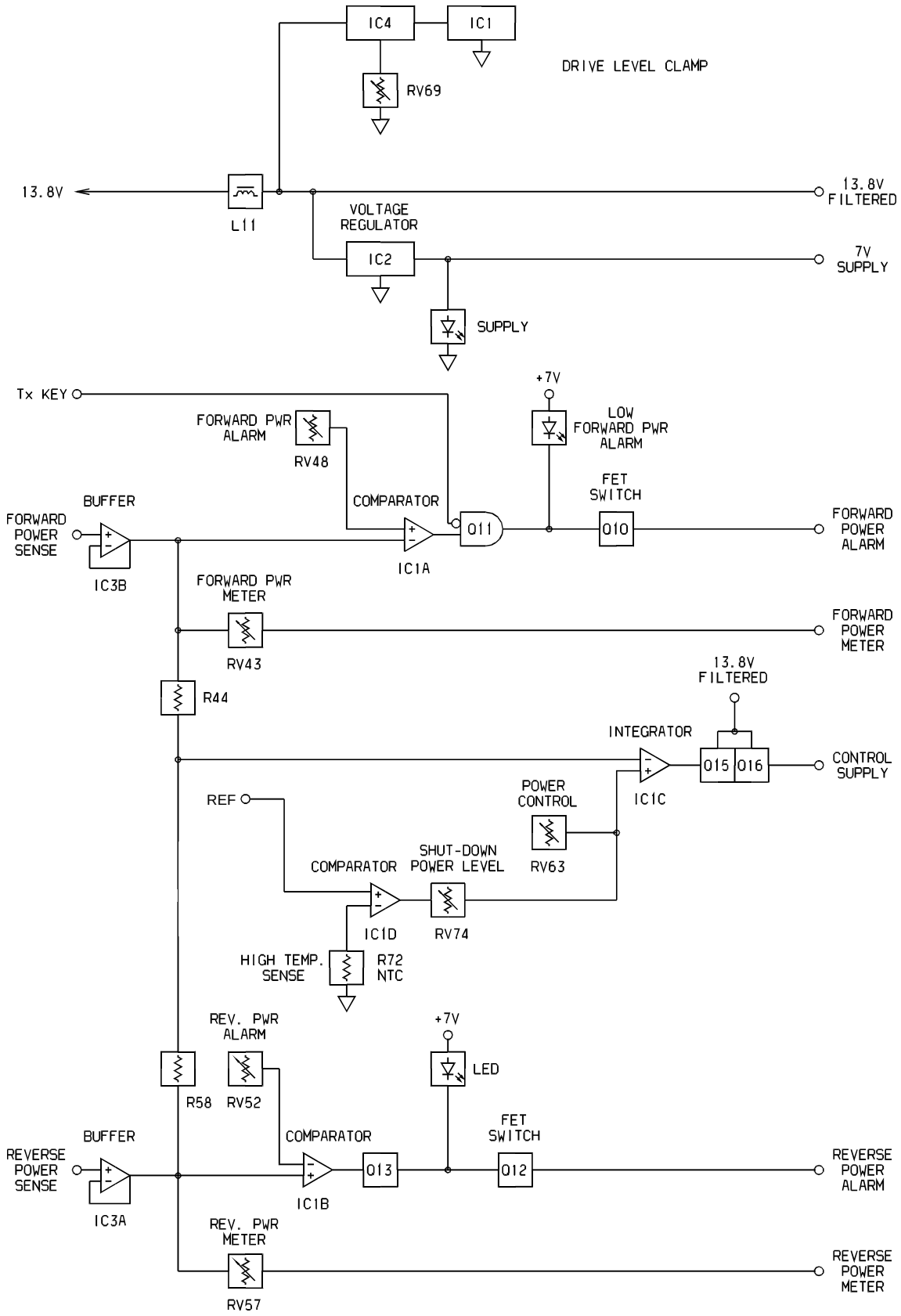

Figure 2.2 Control Circuitry Block Diagram

 Copyright TEL

2.3.1 Power Control

The DC voltages from the directional coupler representing forward and reflected power are buffered by the two voltage followers, IC3 pins 1, 2 & 3 and pins 5, 6 & 7. Their outputs are summed at an integrator (IC1 pins 8, 9 & 10), which drives the series pass control element (Q16).

Forward and reflected power are summed so that, under high output VSWR, the power control turns the PA down. This is because the control loop adjusts for the same DC voltage from the directional coupler that would have been present if there were no reflected power.

2.3.2 Driver Power Level

The maximum output power of the T889 can be limited by placing a ceiling on the driver output power level using RV69 (accessible through the side cover). For example, if RV69 is set for a maximum output power of 50W, the range of adjustment using RV63 (front panel power adjust) will be 20 to 50W.

2.3.3 Thermal Protection

At excessively high temperatures, the output power will automatically reduce to a preset level (set by RV74), thus preventing the PA from overheating.

A thermistor controlled voltage divider (R68, R72) applies a voltage to a comparator with hysteresis (IC1 pins 12, 13 & 14).

The output current from the comparator is summed into the power control network via RV74 so that the power level to which the PA must turn down may be set.

2.3.4 Forward And Reverse Power Alarms

If forward power drops below, or reverse power rises above, presettable limits, alarms may be triggered.

The alarm outputs are open drain configuration and are low under normal conditions (i.e. forward and reverse power levels are normal).

IC1 pins 1, 2 & 3 and pins 5, 6 & 7 form comparators with thresholds adjusted via RV48 and RV52 respectively. The inputs are from the forward and reverse power signals from the directional coupler, buffered by IC3 pins 1, 2 & 3 and pins 5, 6 & 7. Thus, the power levels at which the forward and reverse power alarms are triggered are defined by RV48 and RV52 respectively.

2.3.5 Forward And Reverse Power Metering

Forward and reverse power signals from the two IC3 buffers are available for metering purposes. The output currents are adjustable via RV43 (forward power) and RV57 (reverse power).

2.3.6 Fan Control Circuitry

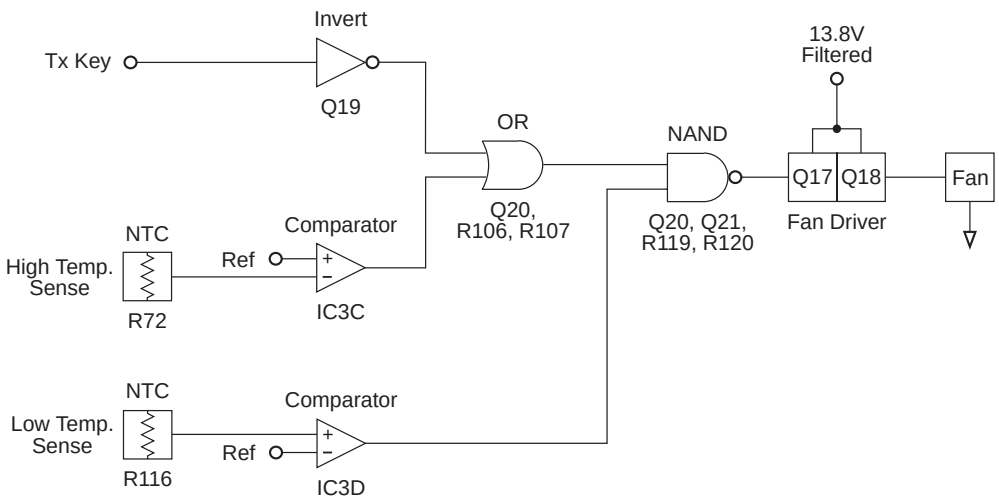

Figure 2.3 Fan Control Logic Diagram

Comparator IC3 pins 8, 9 & 10 are set to trigger at heatsink temperatures greater than +70°C, and pins 12, 13 & 14 at temperatures greater than -10°C.

A logic AND function is applied to the comparator outputs by Q20 and Q21, thereby turning on the fan unconditionally (via Q17 and Q18) if the heatsink temperature exceeds +70°C.

A logic OR function is applied to comparator IC3 pins 8, 9 & 10 and Tx KEY signals, thereby turning on the fan when the transmitter is keyed and the temperature is between -10°C and +70°C.

If the temperature drops below -10°C, Q21 is turned off, preventing either Q19 or Q20 from activating the fan.

 Copyright TEL

3 Introduction To Servicing

This section provides some general and advisory information on servicing procedures.

The following topics are covered in this section.

Section	Title	Page
3.1	**General**	**3.3**
3.1.1	Caution: CMOS Devices	3.3
3.1.2	Caution: Aerial Load	3.3
3.1.3	Caution: Beryllium Oxide & Power Transistors	3.4
3.2	**Mechanical**	**3.5**
3.2.1	Pozidriv Recess Head Screws	3.5
3.2.2	UNC Thread Screws	3.5
3.2.3	Screw Torques	3.5
3.2.4	Disassembly / Reassembly	3.5
3.3	**Component Replacement**	**3.6**
3.3.1	Leaded Components	3.6
3.3.1.1	Desoldering Iron Method	3.6
3.3.1.2	Component Cutting Method	3.6
3.3.2	Surface Mount Devices	3.7
3.4	**To Replace PA Transistors**	**3.8**
3.4.1	Capacitor / Transistor Spacing	3.8
3.4.1.1	Q1 (2SC2933 Pre-Driver)	3.8
3.4.1.2	Q2, Q3, Q4, Q5 & Q6 (SD1414)	3.8
3.4.2	Replacement Procedure	3.8
3.5	**To Remove The PCB From The Heatsink**	**3.10**
3.6	**To Remove Cased Mica Capacitors**	**3.10**

Figure	Title	Page
3.1	Typical Anti-static Bench Set-up	3.3
3.2	Typical Transistor / Capacitor Spacing (Q1 & Q2 Shown)	3.9

Copyright TEL

3.1 General

If you require further information about the T889 or this manual, contact your nearest authorised Tait Dealer or Service Centre. Further assistance may be obtained from the Customer Support Group, Radio Infrastructure Division, Tait Electronics Ltd, Christchurch, New Zealand.

When requesting this information, please quote the equipment type number (e.g. T889-10) and serial number. In the case of the service manual quote the Tait Internal Part Number (IPN), e.g. M889-00-100, and for circuit diagrams quote the “Title”, “IPN” and “Issue”.

3.1.1 Caution: CMOS Devices

This equipment contains CMOS Devices which are susceptible to damage from static charges. Care when handling these devices is essential. For correct handling procedures refer to the manufacturers' data books, e.g. Philips data books covering CMOS devices, or Motorola CMOS data books, Section 5 “Handling”, etc.

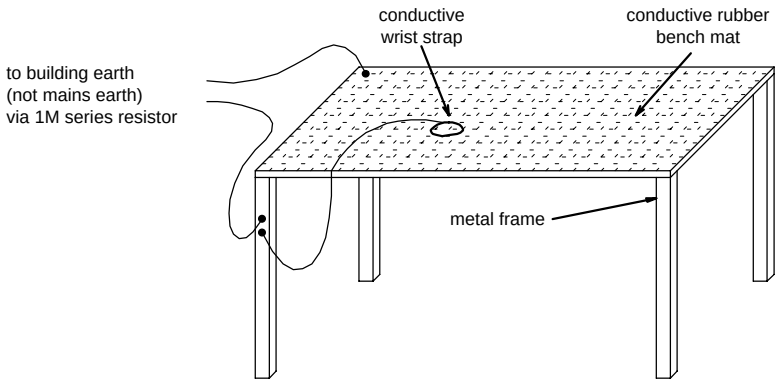

Figure 3.1 Typical Anti-static Bench Set-up

An anti-static bench kit (refer to Figure 3.1) is available from Tait Electronics Ltd under the usual consumable goods ordering system. The kit is held in stock under IPN 937-00000-34 and contains:

1 conductive rubber bench mat
1 earth lead to connect the mat to ground (c/w 1M series resistor)
1 wrist strap
information leaflet.

3.1.2 Caution: Aerial Load

The equipment has been designed to operate safely under a wide range of aerial loading conditions. However, it is strongly recommended that the transmitter should not be operated in the absence of a suitable load. Failure to observe this warning may result in damage to the transmitter output power stage.

3.1.3 Caution: Beryllium Oxide & Power Transistors

The RF power transistors in current use all contain some beryllium oxide. This substance, while perfectly harmless in its normal solid form, can become a severe health hazard when it has been reduced to dust. For this reason the RF power transistors should not be broken open, mutilated, filed, machined, or physically damaged in any way that can produce dust particles.

 Copyright TEL

3.2 Mechanical

3.2.1 Pozidriv Recess Head Screws

Pozidriv recess head screws are the preferred standard on all Tait manufactured equipment. The very real advantages of this type of screw will not be realised unless the correct screwdrivers are used by servicing personnel.

3.2.2 UNC Thread Screws

All black finish Pozidriv screws used in the T889 are 4-40 UNC thread and cannot be interchanged with M3 screws. Note that different lengths are used in different applications.

3.2.3 Screw Torques

It is important to tighten the cover and power transistor securing screws to the correct torque to ensure that the T889 maintains its specified performance.

We recommend the following torque settings:

cover screws	..	6lb-in./0.7Nm
power transistors	..	6lb-in./0.7Nm

3.2.4 Disassembly/Reassembly

The power output level setting procedures should be carried out with the cover on.

3.3 Component Replacement

3.3.1 Leaded Components

Whenever components are removed from or fitted to the PCB, care must be taken to avoid damage to the track. The two satisfactory methods of removing components from PTH PCBs are detailed below.

Note: The first method requires the use of a desoldering station, e.g. Philips SBC 314 or Pace MBT-100E.

3.3.1.1 Desoldering Iron Method

Place the tip over the lead and, as the solder starts to melt, move the tip in a circular motion.

Start the suction and continue the movement until 3 or 4 circles have been completed.

Remove the tip while continuing suction to ensure that all solder is removed from the joint, then stop the suction.

Before pulling the lead out, ensure it is not stuck to the plating.

If the lead is still not free, resolder the joint and try again.

Note: The desoldering iron does not usually have enough heat to desolder leads from the ground plane. Additional heat may be applied by holding a soldering iron on the tip of the desoldering iron (this may require some additional help).

3.3.1.2 Component Cutting Method

Cut the leads on the component side of the PCB.

Heat the solder joint ***sufficiently*** to allow ***easy*** removal of the lead by drawing it out from the component side: do ***not*** use undue force.

Fill the hole with solder and then clear with solderwick.

 Copyright TEL

3.3.2 Surface Mount Devices

Caution: **Surface mount devices (SMD's) require special storage, handling, removal and replacement techniques. This equipment should be serviced only by an approved Tait Dealer or Service Centre equipped with the necessary facilities. Repairs attempted with incorrect equipment or by untrained personnel may result in permanent damage. If in doubt, contact Tait Electronics Ltd or your nearest Tait Branch or Subsidiary.**

3.4 To Replace PA Transistors

Caution: **As the location of certain components in the PA is critical to performance, it is important that any components removed or disturbed are refitted in *EXACTLY* the same position.**

Caution: **Do not solder the tabs before torquing down otherwise the device may be broken.**

3.4.1 Capacitor /Transistor Spacing

Refer to Figure 3.2.

3.4.1.1 Q1 (2SC2933 Pre-Driver)

Before attempting to remove Q1, measure the distance between the capacitors labelled “c” and the transistor body (measurement “a”) so that the capacitors can be replaced in ***exactly*** the same position.

Note: Be sure to measure between the transistor body and the ***tabs*** (not the body) of the capacitors.

Position the capacitors labelled “b” hard up against the transistor body.

3.4.1.2 Q2, Q3, Q4, Q5 & Q6 (SD1414)

Position all capacitors labelled “b” hard up against the transistor body.

3.4.2 Replacement Procedure

Desolder the tabs (and grounding clips if an SD1414) by heating with a soldering iron and lifting away from the PCB with a thin stainless steel spike, or screwdriver.

Unscrew the transistor and remove the device.

Smear the face of the replacement device with heatsink compound and tighten it securely (torque setting 6lb-in./0.7Nm) to the heatsink. If you are replacing an SD1414, remember to fit new grounding clips.

Solder the tabs.

Replace each capacitor as instructed in Section 3.4.1.

 Copyright TEL

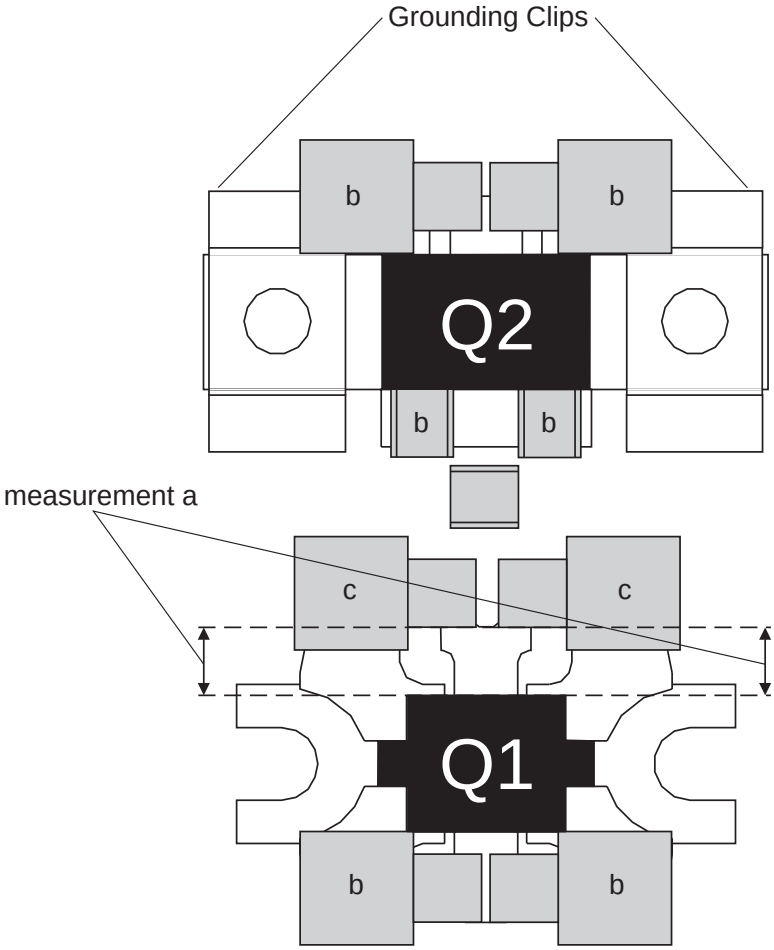

Figure 3.2 Typical Transistor/Capacitor Spacing (Q1 & Q2 Shown)

3.5 To Remove The PCB From The Heatsink

Most components are soldered topside only, but in some cases access to the underside of the PCB is necessary.

Remove the D-range connector.

Disconnect the power feed to the fan.

Remove the 13 PCB retaining screws (2 are hidden beneath the harmonic filter shield).

Remove the transistor mounting screws.

Remove the mounting screws for the TO-220 devices:

R6, R7, R9, R16, R17, R17a and R18.

Remove the retaining screws for the wireline couplers (L13, L14, L15, L40, L41 and L42).

Remove the output 50 ohm coaxial connector by unscrewing it from the heatsink casting and desoldering it from the PCB.

Disconnect the input 50 ohm coaxial cable by unplugging it at the PCB.

Disconnect the battery positive and negative feed wires from the PCB.

Disconnect the alarm and metering wires from the PCB.

Lift the PCB gently from the heatsink to gain access to the underside of the PCB.

Caution: **Do not operate the PA with the PCB detached as the heatsink is used for earthing and for the dissipation of heat generated within the transistors.**

To replace the PCB, reverse the order of removal, taking care that the wiring is correctly routed and is not subjected to 'pinching'.

3.6 To Remove Cased Mica Capacitors

Cased mica capacitors can be removed by heating the top with a heavy-duty soldering iron and gently lifting the capacitor off the PCB with a solder-resistant spike or equivalent.

 Copyright TEL

4 Initial Tuning & Adjustment

The following section describes the initial set-up procedures, including alarm adjustment and power meter calibration.

The following topics are covered in this section.

Section	Title	Page
4.1	Initial Connections	4.3
4.2	RF Alignment	4.3
4.3	High Temperature Shutdown Power Level	4.3
4.4	Low Forward Power Alarm	4.3
4.5	High Reverse Power Alarm	4.4
4.6	Remote Forward Power Meter Calibration	4.4
4.7	Remote Reverse Power Meter Calibration	4.4

Copyright TEL

4.1 Initial Connections

Connect the PA to a power supply, an output RF load and a power meter as detailed below:

power supply rating	>30A
RF load	>150W.

Provide a keyed RF drive at the required frequency.

Connect the drive source key line to pin 12 of the external connector.

Set RV69 (temperature shutdown) fully anticlockwise to avoid RF power cycling between the levels as set by RV63 and RV74.

4.2 RF Alignment

Set RV63 (power control) fully clockwise.

Key on the drive source (the power output should exceed 100W).

Adjust RV69 (driver power level) until the output power drops to 100W.

Adjust RV63 to reduce the power output to the required level (e.g. 90W).

4.3 High Temperature Shutdown Power Level

Set RV63 (power control) to the required output power.

Earth pin 12 of IC1 (the pad at NTC R72 is convenient).

Adjust RV74 (shutdown power level) for an output power of 20W.

Remove the earth from pin 12 of IC1.

4.4 Low Forward Power Alarm

Set RV63 (power control) to the output power at which the alarm is required to activate.

Adjust RV48 (forward power alarm) until the front panel LED just lights.

Reset RV63 to the required output power.

Note: Remote indication is available at D-range pin 3.

4.5 High Reverse Power Alarm

Set RV63 to the required output power.

Connect a known mismatch of the required value to the PA output.

Apply RF drive and Tx key.

Adjust RV52 (reverse power alarm) so that the front panel high reverse power LED just lights.

Example: A VSWR of 3:1 can be simulated by connecting an unterminated 150W 3dB pad to the PA output. This will result in a return loss of 6dB.

Note: Remote indication is available at D-range pin 4.

4.6 Remote Forward Power Meter Calibration

If a remote meter is connected, adjust RV43 (forward power meter) for the remote reading to agree with the RF power meter reading.

4.7 Remote Reverse Power Meter Calibration

If a remote meter is connected, connect a 50 ohm 3dB pad (with the output open circuit) to the PA output.

Apply RF drive and Tx key.

Adjust RV57 (reverse power meter) for a quarter of the forward power reading.

 Copyright TEL

5 Fault Finding

The following test procedures and fault finding flow charts may be used to help locate a hardware problem, however they are by no means a complete fault finding procedure. If the fault still exists after having progressed through them in a logical manner, contact your nearest authorised Tait Dealer or Service Centre. Further assistance may be obtained from the Customer Support Group, Radio Infrastructure Division, Tait Electronics Ltd, Christchurch, New Zealand.

The following topics are covered in this section.

Section	Title	Page
5.1	**Visual Checks**	**5.3**
5.2	**Component Checks**	**5.3**
5.3	**DC Checks**	**5.3**
5.4	**RF Checks**	**5.4**
5.5	**Fault Finding Charts**	**5.7**
5.5.1	PA	5.7
5.5.2	Power Control	5.8
5.5.3	Fan Control Circuitry	5.9

Figure	Title	Page
5.1	Positioning Of Test Leads For Q1-Q6	5.6

Copyright TEL

5.1 Visual Checks

Remove the cover from the T889 and inspect the PCB for damaged or broken components, paying particular attention to the surface mounted devices (SMD's).

Check for defective solder joints. If repair or replacement is considered necessary, refer to Sections 3.3, 3.4, 3.5 and 3.6.

5.2 Component Checks

If a transistor is suspected of faulty operation, an indication of its performance can be assessed by measuring the forward and reverse resistance of the junctions. First make sure that the transistor is not shunted by some circuit resistance (unless the device is completely desoldered). A 20k ohm/V or better multimeter should be used for taking the measurements, using only the medium or low resistance ranges.

The collector current drawn by multi-junction transistors is a further guide to their performance.

If an IC is suspect, the most reliable check is to measure the DC operating voltages. Due to the catastrophic nature of most IC failures, the pin voltages will usually be markedly different from the recommended values in the presence of a fault. The recommended values can be obtained from either the circuit diagram or the component data catalogue.

5.3 DC Checks

Check that +13.8V is present on the collectors of Q2, Q3, Q4, Q5 and Q6. Make this measurement when the transmitter is not keyed.

Check that approximately 8-13.8V is present on the collector of Q1 (the level is dependent on RV69 being set to maximum).

Check that +13.8V is present at pin 4 of IC3.

Check that approximately +12V is present at pin 4 of IC1 (the level is dependent on RV69 being set to maximum).

Check that +7.0V is present at the output of regulator IC2.

5.4 RF Checks

The PA Fault Finding Chart (Section 5.5.1) provides a systematic approach for locating a fault in the RF circuitry. Use this chart in conjunction with Figure 5.1, which shows the locations of the 50Ω input and output test points for RF transistors Q1-Q6.

Transistor	Input Transmission Line	Output Transmission Line
Q1-Q2	L1	L12
Q3	L16	L22
Q4	L26	L32
Q5	L33	L39
Q6	L43	L49

Note 1: ***Always*** test individual PA stages at the 50Ω test points, located at the ends of the semi-rigid transmission lines furthest away from the RF transistors.

Note 2: ***Always*** test Q1 and Q2 as a pair.

Note 3: Use 50Ω semi-rigid coax for the flying test leads.

For problems with the power control circuitry, refer to the Power Control Fault Finding Chart (Section 5.5.2).

 Copyright TEL

replace A4 pages 5.5/5.6 with A3 pages 5.5/5.6, file name 88900_5a.100

replace A4 pages 5.5/5.6 with A3 pages 5.5/5.6, file name 88900_5a.100

Copyright TEL

5.5 Fault Finding Charts

5.5.1 PA

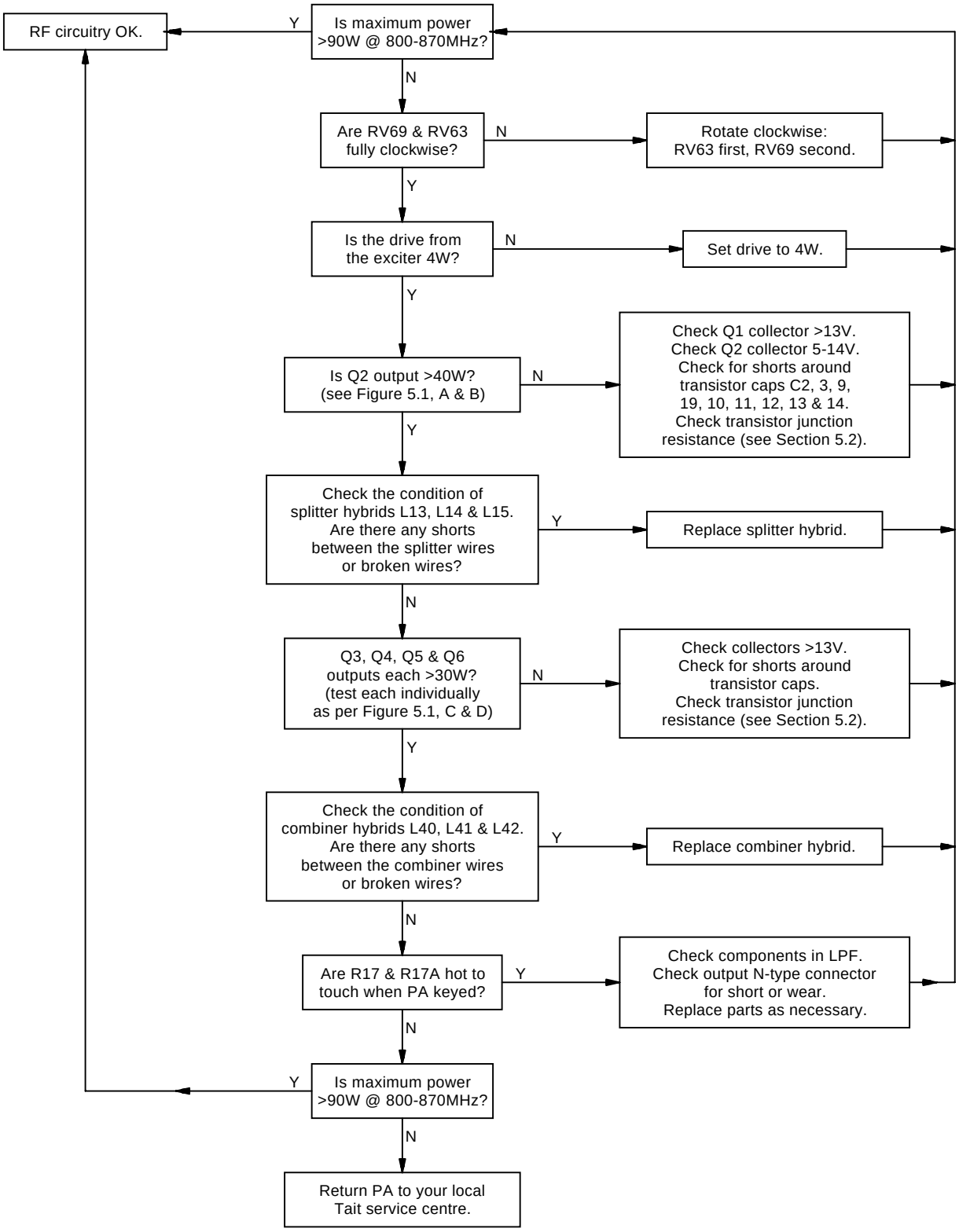

5.5.2 Power Control

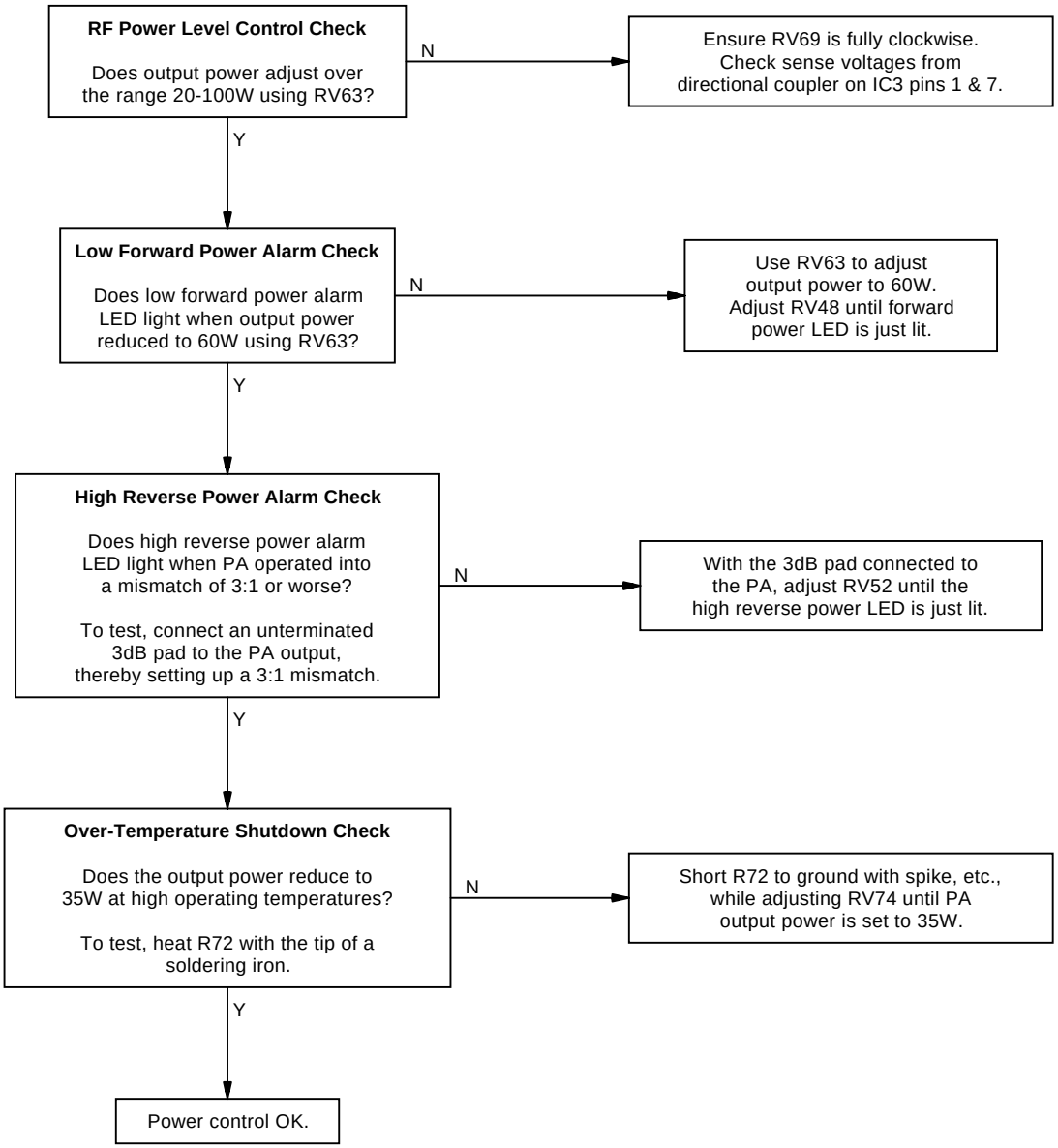

 Copyright TEL

5.5.3 Fan Control Circuitry

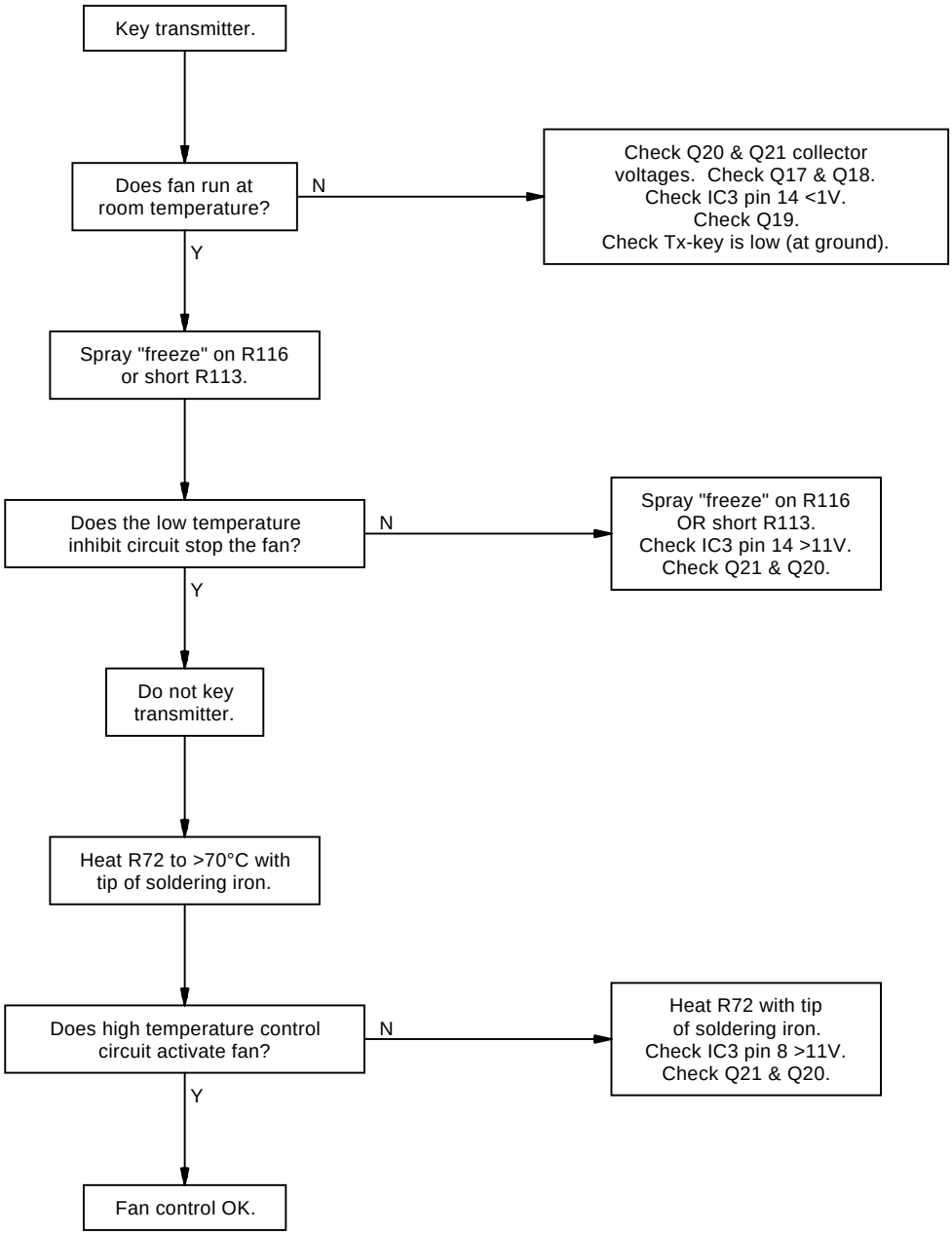

Copyright TEL

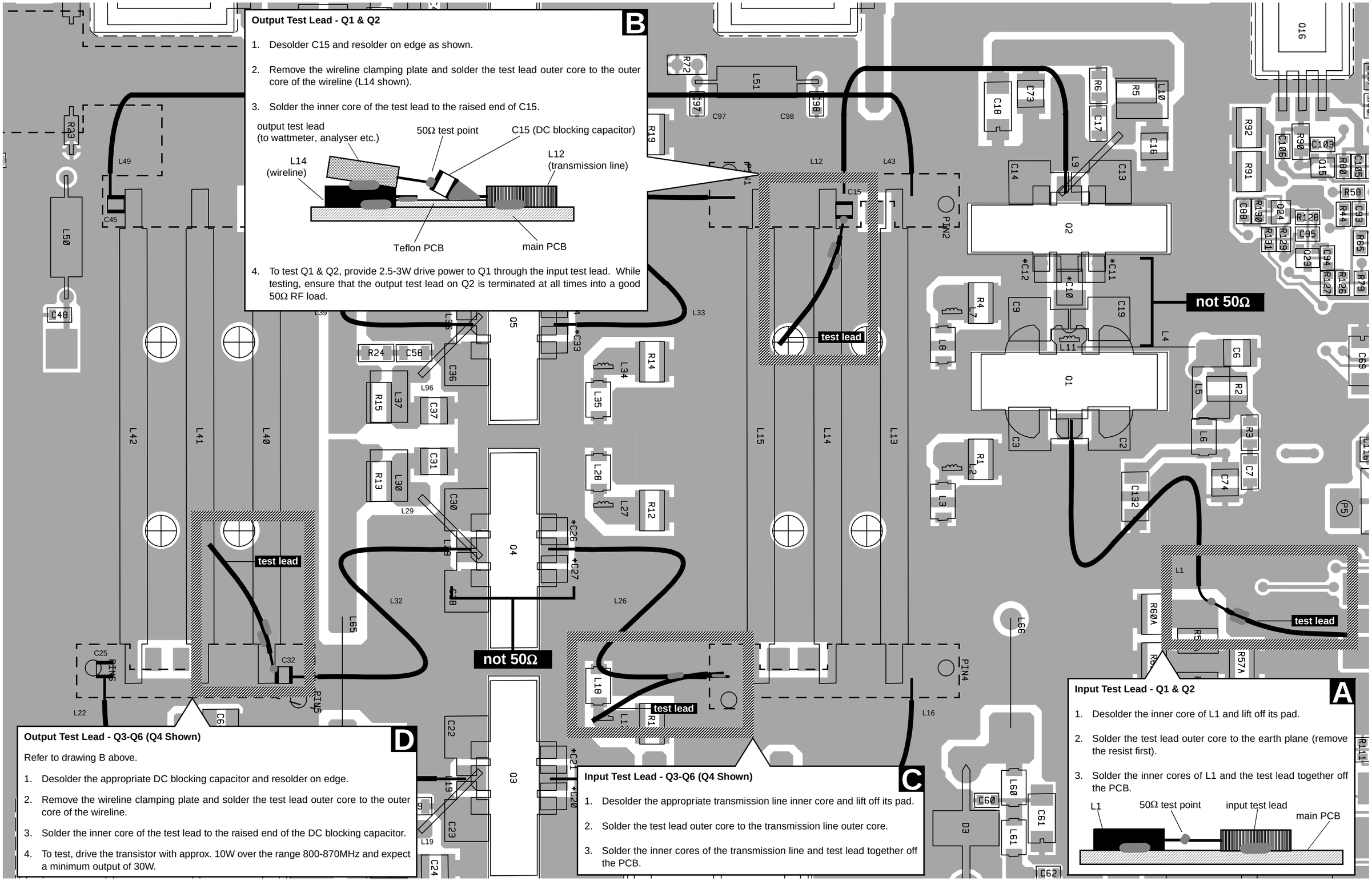

Figure 5.1 Positioning Of Test Leads For Q1-Q6

Copyright TEL

6 Installation

The following section gives a brief description of the basic rack mounting and wiring procedures.

The following topics are covered in this section.

Section	Title	Page
6.1	**Rack Mounting**	**6.3**
6.2	**Rack Wiring**	**6.5**
6.3	**Power Supply**	**6.5**

Figure	Title	Page
6.1	Guide Rails	6.3
6.2	Chassis Connectors	6.3
6.3	Latched Position	6.4
6.4	D-Range Wiring - Rear View	6.5

6.1 Rack Mounting

The T889 PA is designed for use in a standard 483mm rack frame using the supporting guide rails supplied with the unit (refer to Figure 6.1).

The lower guide rail is located in the rack frame with three screws, two at the rear and one at the front. The short upper guide rail is located with just one screw. The PA is secured into the guide with two front panel mounting screws.

The RF input via the rear panel BNC connector should be connected to an adjacent T881 transmitter. The RF output is via the rear N-type connector, whilst all DC, audio and control connections are via the D-range connector.

The guide rails will allow the PA to be latched in the extended position (refer to Figure 6.3).

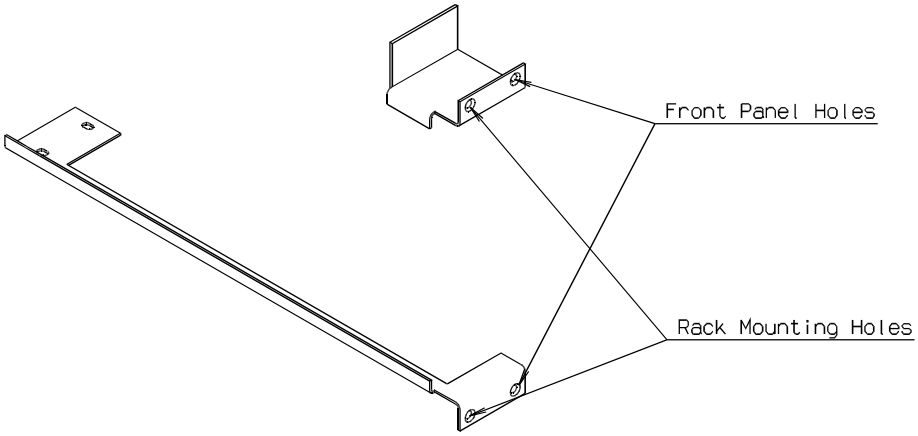

Figure 6.1 Guide Rails

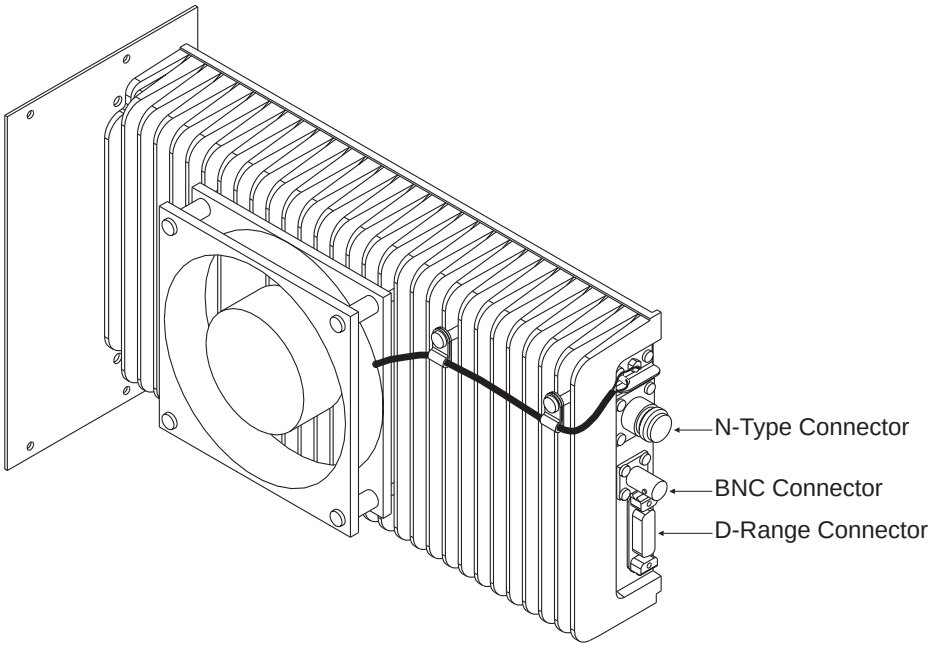

Figure 6.2 Chassis Connectors

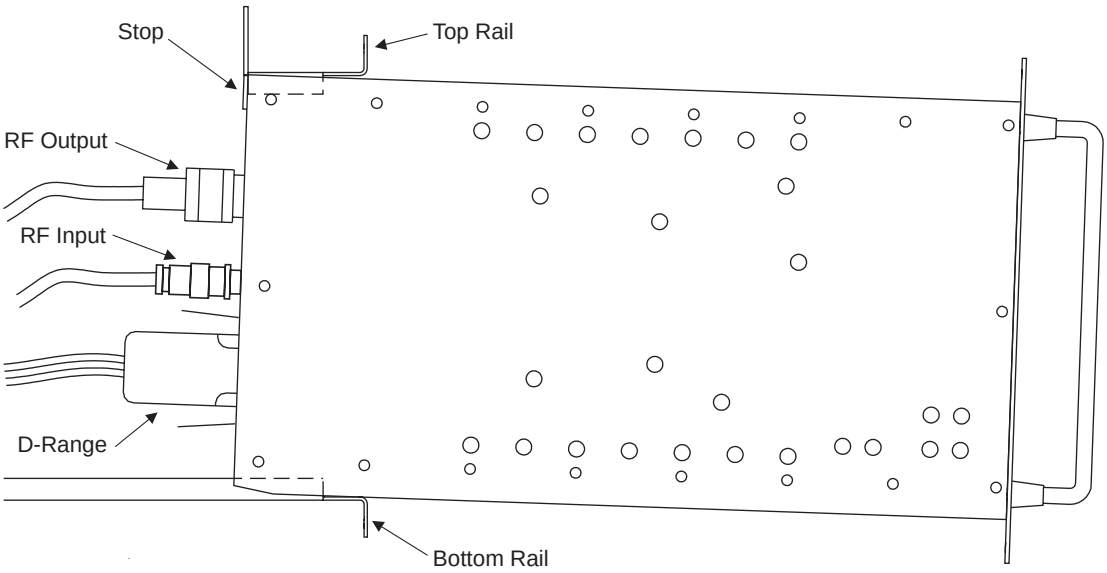

Figure 6.3 Latched Position

Copyright TEL

6.2 Rack Wiring

Wire the D-range connector as shown in Figure 6.4. Ensure that the cables are not subjected to any stresses due to tight bends or incorrect lengths.

The RF coaxial cables to the BNC and N-type connectors should be free from acute bends or twists. If access to the rear of the rack frame is restricted, the cables should be long enough to permit full withdrawal of the chassis from the guide.

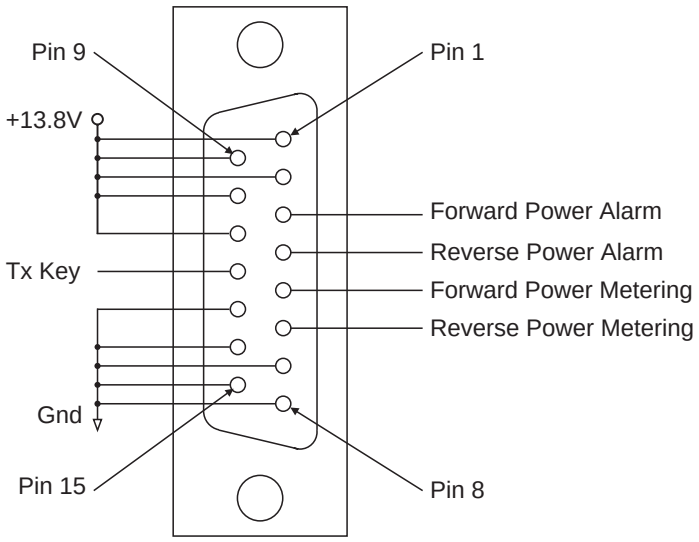

Figure 6.4 D-Range Wiring - Rear View

6.3 Power Supply

If a power supply other than an appropriate Tait model is used, ensure that it is capable of providing enough current to drive the T800 system and is also free from excessive ripple or noise.

7 PCB Information

This section provides parts lists, a grid reference index, PCB layouts and circuit diagrams for the T889 PA.

This section contains the following information.

Section	Title	IPN	Page
7.1	**Introduction**		**7.1.3**
7.2	**T889 PA PCB**	**220-01326-01**	**7.2.1**

Copyright TEL

7.1 Introduction

PCB Identification

All PCBs are identified by a unique 10 digit number, the last 2 digits of which define the issue status. The issue status starts at 00 and increments through 01, 02, 03, etc. as the PCB is updated. Some issue PCBs never reach full production status and are therefore not included in this manual. A letter following the 10 digit IPN has no relevance in identifying the PCB for service purposes.

Parts Lists

The 10 digit numbers (000-00000-00) in this Parts List are “internal part numbers” (IPNs). Your spare parts orders can be handled more efficiently if you quote the IPN and provide a brief description of the part.

The components listed in this parts list are divided into two main types: those with a circuit reference (e.g. C2, D1, R121, etc.) and those without (miscellaneous and mechanical).

Those with a circuit reference are grouped firstly by PCB, then by component type in numerical order. Each component entry comprises three or four columns: the circuit reference, variant number (if applicable), IPN and description. A number in the variant column indicates that this component is fitted only to that variant.

The miscellaneous and mechanical section lists the variant and common parts in IPN order.

Grid Reference Index

To assist in locating components and labelled pads on the PCB layouts and circuit diagrams, a component grid reference index has been provided. This index lists the components and pads in alphabetical order, along with the appropriate alphanumeric grid references.

The first digit in the circuit diagram reference is the sheet number, and the last two characters give the location of the component on that sheet.

The first digit in the PCB layout reference is a “1” or “2”, indicating the top or bottom side layout respectively, and the last two characters give the location of the component on that diagram.

Using CAD Circuit Diagrams

Reading a CAD circuit diagram is similar to reading a road map, in that both have an alphanumeric border. The circuit diagrams in this manual use letters to represent the horizontal axis, and numbers for the vertical axis. These circuit diagram “grid references” are useful in following a circuit that is spread over two or more sheets.

When a line representing part of the circuitry is discontinued, a reference will be given at the end of

the line to indicate where the rest of the circuitry is located. The first digit refers to the sheet number (printed on the bottom right hand corner of the CAD diagram) and the last two characters refer to the location on that sheet of the continuation of the circuit (e.g. 1-D4).

If more than one line is represented (indicated by a double thickness line), a dot with a reference label will follow the route each individual line represents.

 Copyright TEL

7.2 T889 PA PCB

This section contains the following information.

IPN	Section	Page
220-01326-01	Parts List	7.2.2
	Mechanical & Miscellaneous Parts	7.2.5
	Grid Reference Index	7.2.7
	PCB Layout - Bottom Side	7.2.9
	PCB Layout - Top Side	7.2.10
	RF Section Circuit Diagram	7.2.11
	Control Section Circuit Diagram	7.2.12

T889 Parts List (IPN 220-01326-01)

How To Use This Parts List

The components listed in this parts list are divided into two main types: those with a circuit reference (e.g. C2, D1, R121, etc) and those without (miscellaneous and mechanical).

Those with a circuit reference are grouped by component type in numerical order. Each component entry comprises three or four columns: the circuit reference, variant number (if applicable), IPN and description. A number in the variant column indicates that this component is fitted only to that variant.

The miscellaneous and mechanical section lists the variant and common parts in IPN order.

Parts List Amendments

Although shown in the parts list, PCB layout and circuit diagrams, R57A, R59A and R60A are not fitted (to increase the drive to Q1).

Ref	Var	IPN	Description
C1		015-02470-03	CAP CER CHIP 47P 5% NPO 500V HIQ GRH111 2.
C2		029-02120-02	CAP MICA 5MM CASE 12P 5%
C3		029-02120-02	CAP MICA 5MM CASE 12P 5%
C6		015-02470-03	CAP CER CHIP 47P 5% NPO 500V HIQ GRH111 2.
C7		015-06100-08	CAP CER 1206 CHIP 100N 10% X7R 50V
C9		029-02100-02	CAP MICA 5MM CASE 10P 5%
C10		015-01680-02	CAP CER HIQ 1210 CHIP 6P8 5% NPO 200V
C11		015-02120-03	CAP CER CHIP 12P 5% 500V HIQ GRH111 2.8MM
C12		015-02120-03	CAP CER CHIP 12P 5% 500V HIQ GRH111 2.8MM
C13		029-02200-02	CAP MICA 5MM CASE 20P 5%
C14		029-02220-02	CAP MICA 5MM CASE 22P 5%
C15		015-02470-03	CAP CER CHIP 47P 5% NPO 500V HIQ GRH111 2
C16		015-02470-03	CAP CER CHIP 47P 5% NPO 500V HIQ GRH111 2
C17		015-06100-08	CAP CER 1206 CHIP 100N 10% X7R 50V
C18		014-07470-03	L) CAP TANT CHIP 4U7 25V +-20% 6X3.2X2.5M
C19		029-02120-02	CAP MICA 5MM CASE 12P 5%
C20		015-02150-03	CAP CER CHIP 15P 5% 500V HIQ GRH111 2.8MM
C21		015-02120-03	CAP CER CHIP 12P 5% 500V HIQ GRH111 2.8MM
C22		029-02220-02	CAP MICA 5MM CASE 22P 5%
C23		029-02220-02	CAP MICA 5MM CASE 22P 5%
C24		015-02470-03	CAP CER CHIP 47P 5% NPO 500V HIQ GRH111 2
C25		015-02470-03	CAP CER CHIP 47P 5% NPO 500V HIQ GRH111 2
C26		015-02150-03	CAP CER CHIP 15P 5% 500V HIQ GRH111 2.8MM
C27		015-02120-03	CAP CER CHIP 12P 5% 500V HIQ GRH111 2.8MM
C28		029-02220-02	CAP MICA 5MM CASE 22P 5%
C29		015-06100-08	CAP CER 1206 CHIP 100N 10% X7R 50V
C30		029-02220-02	CAP MICA 5MM CASE 22P 5%
C31		015-02470-03	CAP CER CHIP 47P 5% NPO 500V HIQ GRH111 2
C32		015-02470-03	CAP CER CHIP 47P 5% NPO 500V HIQ GRH111 2
C33		015-02150-03	CAP CER CHIP 15P 5% 500V HIQ GRH111 2.8MM
C34		015-02120-03	CAP CER CHIP 12P 5% 500V HIQ GRH111 2.8MM
C35		029-02220-02	CAP MICA 5MM CASE 22P 5%
C36		029-02220-02	CAP MICA 5MM CASE 22P 5%
C37		015-02470-03	CAP CER CHIP 47P 5% NPO 500V HIQ GRH111 2
C38		015-02470-03	CAP CER CHIP 47P 5% NPO 500V HIQ GRH111 2
C39		014-07470-03	L) CAP TANT CHIP 4U7 25V +-20% 6X3.2X2.5M
C40		015-02150-03	CAP CER CHIP 15P 5% 500V HIQ GRH111 2.8MM
C41		015-02120-03	CAP CER CHIP 12P 5% 500V HIQ GRH111 2.8MM
C42		029-02220-02	CAP MICA 5MM CASE 22P 5%
C43		029-02220-02	CAP MICA 5MM CASE 22P 5%
C44		015-02470-03	CAP CER CHIP 47P 5% NPO 500V HIQ GRH111 2
C45		015-02470-03	CAP CER CHIP 47P 5% NPO 500V HIQ GRH111 2
C46		015-06100-08	CAP CER 1206 CHIP 100N 10% X7R 50V
C47		014-07470-03	L) CAP TANT CHIP 4U7 25V +-20% 6X3.2X2.5M
C48		015-24470-08	CAP CER 0805 CHIP 4N7 10% X7R 50V
C50		015-22470-01	CAP CER 0805 CHIP 47P 5% NPO 50V
C51		015-22470-01	CAP CER 0805 CHIP 47P 5% NPO 50V
C52		015-24470-08	CAP CER 0805 CHIP 4N7 10% X7R 50V
C53		029-01270-02	CAP MICA 5MM CASE 2P7 +-0.25P
C54		029-01560-01	CAP MICA 10MM CASE 5P6 +-0.25P
C55		029-01680-01	CAP MICA 10MM CASE 6P8 5%
C56		029-01560-01	CAP MICA 10MM CASE 5P6 +-0.25P
C57		029-01270-02	CAP MICA 5MM CASE 2P7 +-0.25P
C58		015-06100-08	CAP CER 1206 CHIP 100N 10% X7R 50V
C59		014-07470-03	L) CAP TANT CHIP 4U7 25V +-20% 6X3.2X2.5M
C60		015-24470-08	CAP CER 0805 CHIP 4N7 10% X7R 50V
C61		014-07470-03	L) CAP TANT CHIP 4U7 25V +-20% 6X3.2X2.5M
C62		015-24100-08	CAP CER 0805 CHIP 1N 10% X7R 50V
C64		015-01330-06	CAP CER 1210 CHIP 3P3 NPO 500V GRM42-2
C65		015-22470-01	CAP CER 0805 CHIP 47P 5% NPO 50V
C66		015-22470-01	CAP CER 0805 CHIP 47P 5% NPO 50V
C67		015-02470-03	CAP CER CHIP 47P 5% NPO 500V HIQ GRH111 2
C68		015-02470-03	CAP CER CHIP 47P 5% NPO 500V HIQ GRH111 2
C69		014-08100-00	CAP TANT CHIP 10M 16VW +-20% 6X3.2X2.5MM
C70		015-06100-08	CAP CER 1206 CHIP 100N 10% X7R 50V
C71		015-22470-01	CAP CER 0805 CHIP 47P 5% NPO 50V
C72		015-02470-03	CAP CER CHIP 47P 5% NPO 500V HIQ GRH111 2
C73		015-02470-03	CAP CER CHIP 47P 5% NPO 500V HIQ GRH111 2
C74		015-02470-03	CAP CER CHIP 47P 5% NPO 500V HIQ GRH111 2
C76		015-24470-08	CAP CER 0805 CHIP 4N7 10% X7R 50V
C77		015-22470-01	CAP CER 0805 CHIP 47P 5% NPO 50V
C78		015-22470-01	CAP CER 0805 CHIP 47P 5% NPO 50V
C81		015-22470-01	CAP CER 0805 CHIP 47P 5% NPO 50V
C84		015-24470-08	CAP CER 0805 CHIP 4N7 10% X7R 50V
C85		015-22470-01	CAP CER 0805 CHIP 47P 5% NPO 50V
C87		015-22470-01	CAP CER 0805 CHIP 47P 5% NPO 50V
C88		015-22470-01	CAP CER 0805 CHIP 47P 5% NPO 50V
C89		015-06100-08	CAP CER 1206 CHIP 100N 10% X7R 50V
C90		015-06100-08	CAP CER 1206 CHIP 100N 10% X7R 50V
C91		014-08100-00	CAP TANT CHIP 10M 16VW +-20% 6X3.2X2.5MM
C92		015-25100-08	CAP CER 0805 CHIP 10N 10% X7R 50V
C93		015-22470-01	CAP CER 0805 CHIP 47P 5% NPO 50V
C94		015-25100-08	CAP CER 0805 CHIP 10N 10% X7R 50V
C95		015-22470-01	CAP CER 0805 CHIP 47P 5% NPO 50V
C96		015-22470-01	CAP CER 0805 CHIP 47P 5% NPO 50V
C97		015-22470-01	CAP CER 0805 CHIP 47P 5% NPO 50V
C98		015-24470-08	CAP CER 0805 CHIP 4N7 10% X7R 50V
C99		015-22470-01	CAP CER 0805 CHIP 47P 5% NPO 50V
C102		015-22470-01	CAP CER 0805 CHIP 47P 5% NPO 50V
C103		015-22470-01	CAP CER 0805 CHIP 47P 5% NPO 50V
C104		015-24470-08	CAP CER 0805 CHIP 4N7 10% X7R 50V
C105		015-22470-01	CAP CER 0805 CHIP 47P 5% NPO 50V
C106		015-22470-01	CAP CER 0805 CHIP 47P 5% NPO 50V
C107		014-07100-02	CAP TANT CHIP 1U0 3.2 X 1.6MM 267 SERIES
C108		015-22470-01	CAP CER 0805 CHIP 47P 5% NPO 50V
C109		015-22470-01	CAP CER 0805 CHIP 47P 5% NPO 50V
C114		015-22470-01	CAP CER 0805 CHIP 47P 5% NPO 50V
C115		015-22470-01	CAP CER 0805 CHIP 47P 5% NPO 50V
C116		015-22470-01	CAP CER 0805 CHIP 47P 5% NPO 50V
C117		015-22470-01	CAP CER 0805 CHIP 47P 5% NPO 50V
C118		015-22470-01	CAP CER 0805 CHIP 47P 5% NPO 50V
C119		015-22470-01	CAP CER 0805 CHIP 47P 5% NPO 50V
C120		015-22470-01	CAP CER 0805 CHIP 47P 5% NPO 50V
C121		015-22470-01	CAP CER 0805 CHIP 47P 5% NPO 50V
C122		015-22470-01	CAP CER 0805 CHIP 47P 5% NPO 50V
C123		015-22470-01	CAP CER 0805 CHIP 47P 5% NPO 50V
C124		015-22470-01	CAP CER 0805 CHIP 47P 5% NPO 50V
C125		015-22470-01	CAP CER 0805 CHIP 47P 5% NPO 50V
C126		015-22470-01	CAP CER 0805 CHIP 47P 5% NPO 50V
C127		015-22470-01	CAP CER 0805 CHIP 47P 5% NPO 50V
C128		015-22470-01	CAP CER 0805 CHIP 47P 5% NPO 50V
C129		015-22470-01	CAP CER 0805 CHIP 47P 5% NPO 50V
C130		015-22470-01	CAP CER 0805 CHIP 47P 5% NPO 50V
C131		015-22470-01	CAP CER 0805 CHIP 47P 5% NPO 50V
C132		014-07470-03	L) CAP TANT CHIP 4U7 25V +-20% 6X3.2X2.5
D1		001-00013-45	(S) DIODE SCHOTTKY 1SS97/2
D2		001-00013-45	(S) DIODE SCHOTTKY 1SS97/2

Copyright TEL

Ref	Var	IPN	Description
D3		001-00011-60	(S) DIODE SR2607 6A/30V
D4		001-10000-70	(S) DIODE SMD BAV70 DUAL SWITCH SOT-23 CO
D6		001-10000-70	(S) DIODE SMD BAV70 DUAL SWITCH SOT-23 CO
D13		001-10000-70	(S) DIODE SMD BAV70 DUAL SWITCH SOT-23 CO
FTC		012-04100-05	CAP F/THRU 1N SUPPR FLTR STUD MTG (fan circuit; mounted on heatsink)
IC1		002-10003-24	(S) IC SMD 324 QUAD OP AMP SO14
IC2		002-00014-62	(S) IC 317L 100MA REG 3 TERMINAL TO-92
IC3		002-10003-24	(S) IC SMD 324 QUAD OP AMP SO14
IC4		002-00014-62	(S) IC 317L 100MA REG 3 TERMINAL TO-92
IC5		002-10003-58	(S) IC SMD LM358 DUAL OP AMP
L1		051-00626-00	COAX 1/4 WAVE XFMR 35E HELI LEFT HAND
L3		065-10004-20	BEAD FE SMD CBD 4.6/3/3-4S2
L4		051-00005-28	COIL TAIT NO 528 HAIRPIN 17MM T550A
L5		052-08160-55	COIL A/W 5.5T/6.0MM HOR 0.8MM WIRE
L6		065-10004-20	BEAD FE SMD CBD 4.6/3/3-4S2
L8		065-10004-20	BEAD FE SMD CBD 4.6/3/3-4S2
L9		051-00005-60	IND HAIRPIN 10MM TALL T859
L10		052-08160-55	COIL A/W 5.5T/6.0MM HOR 0.8MM WIRE
L12		051-00623-00	COAX 1/4 WAVE XFMR 25E HAIR PIN
L13		051-00619-00	COUPLER WIRELINE 800MHZ (53MM JACKET ST
L14		051-00619-00	COUPLER WIRELINE 800MHZ (53MM JACKET ST
L15		051-00619-00	COUPLER WIRELINE 800MHZ (53MM JACKET ST
L16		051-00629-00	COAX 1/4 WAVE XFMR 35E HOCKEY STICK RIGH
L18		065-10004-20	BEAD FE SMD CBD 4.6/3/3-4S2
L19		051-00005-60	IND HAIRPIN 10MM TALL T859
L20		052-08160-55	COIL A/W 5.5T/6.0MM HOR 0.8MM WIRE
L22		051-00624-00	COAX 1/4 WAVE XFMR 25E HOCKEY STICK LEFT
L26		051-00627-00	COAX 1/4 WAVE XFMR 35E HELI RIGHT HAND
L28		065-10004-20	BEAD FE SMD CBD 4.6/3/3-4S2
L29		051-00005-60	IND HAIRPIN 10MM TALL T859
L30		052-08160-55	COIL A/W 5.5T/6.0MM HOR 0.8MM WIRE
L32		051-00621-00	COAX 1/4 WAVE XFMR 25E HELI LEFT HAND
L33		051-00626-00	COAX 1/4 WAVE XFMR 35E HELI LEFT HAND
L35		065-10004-20	BEAD FE SMD CBD 4.6/3/3-4S2
L36		051-00005-60	IND HAIRPIN 10MM TALL T859
L37		052-08160-55	COIL A/W 5.5T/6.0MM HOR 0.8MM WIRE
L39		051-00622-00	COAX 1/4 WAVE XFMR 25E HELI RIGHT HAND
L40		051-00619-00	COUPLER WIRELINE 800MHZ (53MM JACKET ST
L41		051-00619-00	COUPLER WIRELINE 800MHZ (53MM JACKET ST
L42		051-00619-00	COUPLER WIRELINE 800MHZ (53MM JACKET ST
L43		051-00628-00	COAX 1/4 WAVE XFMR 35E HOCKEY STICK LEFT
L45		065-10004-20	BEAD FE SMD CBD 4.6/3/3-4S2
L46		051-00005-60	IND HAIRPIN 10MM TALL T859
L47		052-08160-55	COIL A/W 5.5T/6.0MM HOR 0.8MM WIRE
L49		051-00625-00	COAX 1/4 WAVE XFMR 25E HOCKEY STICK RIGH
L50		056-00021-04	IND FXD 330NH AXIAL
L51		056-00021-04	IND FXD 330NH AXIAL
L52		056-00021-04	IND FXD 330NH AXIAL
L53		052-08323-20	COIL A/W 2T/2.3MM SMD 0.8MM WIRE
L54		052-08325-20	COIL A/W 2T/2.5MM SMD 0.8MM WIRE
L55		052-08325-20	COIL A/W 2T/2.5MM SMD 0.8MM WIRE
L56		052-08323-20	COIL A/W 2T/2.3MM SMD 0.8MM WIRE
L60		065-10004-20	BEAD FE SMD CBD 4.6/3/3-4S2
L61		065-10004-20	BEAD FE SMD CBD 4.6/3/3-4S2
L63		052-56130-85	COIL A/W 8.5T/3.0MM HOR 0.56MM WIRE
L64		051-00630-00	LINK 15MM 1.4MM2 COPPER STAPLE
L65		051-00630-00	LINK 15MM 1.4MM2 COPPER STAPLE
L66		051-00630-00	LINK 15MM 1.4MM2 COPPER STAPLE
LED		008-00013-32	(S) LED 3MM RED LO CURRENT NO MTG (x2)
(front panel)		008-00013-35	(S) LED 3MM GREEN LO CURRENT NO MTG
LINK1		036-10000-00	RES M/F 0805 CHIP ZERO OHM
LINK2		036-10000-00	RES M/F 0805 CHIP ZERO OHM
P1		240-02100-44	SKT COAX MINI JACK PCB MTG ANGLED
Q1		000-00293-30	(S) XSTR 2SC2933 NPN EPITAXIAL PLANAR 900M
Q2	see note below	000-00141-40	(LS) XSTR SD1414 6LFL UHF 45W
Q3		000-00141-40	(LS) XSTR SD1414 6LFL UHF 45W
Q4		000-00141-40	(LS) XSTR SD1414 6LFL UHF 45W
Q5		000-00141-40	(LS) XSTR SD1414 6LFL UHF 45W
Q6		000-00141-40	(LS) XSTR SD1414 6LFL UHF 45W
Q10		000-10017-00	(LS) XSTR SMD MMBF170LT1 FET SOT23
Q11		000-10008-17	(S) XSTR SMD BC817-25 NPN SOT-23 AF LO PW
Q12		000-10017-00	(LS) XSTR SMD MMBF170LT1 FET SOT23
Q13		000-10008-17	(S) XSTR SMD BC817-25 NPN SOT-23 AF LO PW
Q15		000-10008-17	(S) XSTR SMD BC817-25 NPN SOT-23 AF LO PW
Q16		000-00030-95	(S) XSTR 2N6107 PNP TO-220 AF PWR
Q17		000-10008-57	(S) XSTR SMD BCW70/BC857-215 PNP SOT23 AF
Q18		000-00011-70	(S) XSTR BD136 PNP AF PWR TO126
Q19		000-10008-57	(S) XSTR SMD BCW70/BC857-215 PNP SOT23 AF
Q20		000-10008-17	(S) XSTR SMD BC817-25 NPN SOT-23 AF LO PW
Q21		000-10008-17	(S) XSTR SMD BC817-25 NPN SOT-23 AF LO PW
Q22		000-10008-48	(S) XSTR SMD BCW60/BC848B215 NPN SOT23 AF
Q23		000-10008-48	(S) XSTR SMD BCW60/BC848B215 NPN SOT23 AF
Q24		000-10008-57	(S) XSTR SMD BCW70/BC857-215 PNP SOT23 AF
Q25		000-10008-48	(S) XSTR SMD BCW60/BC848B215 NPN SOT23 AF

Note: Fit two new grounding clips (IPN 319-40009-00) when replacing SD1414 transistors (see Section 3.4.2).

Ref	Var	IPN	Description
R1		036-02100-03	L) RES 1218 PWR CHIP 10E 20% 1W
R2		036-02100-03	L) RES 1218 PWR CHIP 10E 20% 1W
R3		036-02100-02	RES 10E 1206 CHIP 200V 250MW RC01
R4		036-02100-03	L) RES 1218 PWR CHIP 10E 20% 1W
R5		036-02100-03	L) RES 1218 PWR CHIP 10E 20% 1W
R6		036-02100-02	RES 10E 1206 CHIP 200V 250MW RC01
R7		039-01650-00	RES DUMP LOAD 50E 16W TO-220
R8		039-05025-00	RES DUMP LOAD 25E 50W TO-220
R9		039-01650-00	RES DUMP LOAD 50E 16W TO-220
R10		036-02100-03	L) RES 1218 PWR CHIP 10E 20% 1W
R11		036-02100-03	L) RES 1218 PWR CHIP 10E 20% 1W
R12		036-02100-03	L) RES 1218 PWR CHIP 10E 20% 1W
R13		036-02100-03	L) RES 1218 PWR CHIP 10E 20% 1W
R14		036-02100-03	L) RES 1218 PWR CHIP 10E 20% 1W
R15		036-02100-03	L) RES 1218 PWR CHIP 10E 20% 1W
R16		039-05025-00	RES DUMP LOAD 25E 50W TO-220
R17		039-05025-00	RES DUMP LOAD 25E 50W TO-220
R17A		039-05025-00	RES DUMP LOAD 25E 50W TO-220
R18		039-05025-00	RES DUMP LOAD 25E 50W TO-220
R19		036-02100-03	L) RES 1218 PWR CHIP 10E 20% 1W
R20		036-02100-03	L) RES 1218 PWR CHIP 10E 20% 1W
R21		036-02100-02	RES 10E 1206 CHIP 200V 250MW RC01
R22		030-53100-20	RES FILM AI 100E 5% 0.4W 4X1.6MM
R23		030-53100-20	RES FILM AI 100E 5% 0.4W 4X1.6MM
R24		036-02100-02	RES 10E 1206 CHIP 200V 250MW RC01
R29		036-02100-02	RES 10E 1206 CHIP 200V 250MW RC01
R36		036-13680-00	RES M/F 0805 CHIP 680E 5%
R37		036-14100-00	RES M/F 0805 CHIP 1K 5%
R37A		036-14100-00	RES M/F 0805 CHIP 1K 5%
R38		036-17100-00	RES M/F 0805 CHIP 1M 5%
R42		036-15100-00	RES M/F 0805 CHIP 10K 5%
RV43		042-05470-09	RES PRESET 50K CERMET 9.5MM SQ FLAT
R44		036-14470-00	RES M/F 0805 CHIP 4K7 5%
R47		036-16100-00	RES M/F 0805 CHIP 100K 5%
RV48		042-04500-08	RES PRESET 5K CERMET 9.5MM SQ FLAT
R49		036-13680-00	RES M/F 0805 CHIP 680E 5%
R50		036-13680-00	RES M/F 0805 CHIP 680E 5%
RV52		042-04500-08	RES PRESET 5K CERMET 9.5MM SQ FLAT
R55		036-17100-00	RES M/F 0805 CHIP 1M 5%
R56		036-15100-00	RES M/F 0805 CHIP 10K 5%
RV57		042-05470-09	RES PRESET 50K CERMET 9.5MM SQ FLAT
R57		036-03820-03	L) RES 1218 PWR CHIP 820E 20% 1W
R57A		036-03820-03	L) RES 1218 PWR CHIP 820E 20% 1W
R58		036-14470-00	RES M/F 0805 CHIP 4K7 5%
R59		036-01560-03	L) RES 1218 PWR CHIP 5E6 20% 1W
R59A		036-01560-03	L) RES 1218 PWR CHIP 5E6 20% 1W
R60		036-03820-03	L) RES 1218 PWR CHIP 820E 20% 1W
R60A		036-03820-03	L) RES 1218 PWR CHIP 820E 20% 1W
R61		036-13220-00	RES M/F 0805 CHIP 220E 5%
R62		036-14100-00	RES M/F 0805 CHIP 1K 5%
#RV63		044-04200-03	RES PRESET MULTITURN 2K 10T PNL MTG
R64		036-14470-00	RES M/F 0805 CHIP 4K7 5%
R65		036-16100-00	RES M/F 0805 CHIP 100K 5%
R66		036-16100-00	RES M/F 0805 CHIP 100K 5%
R67		036-15100-00	RES M/F 0805 CHIP 10K 5%
R68		036-14470-00	RES M/F 0805 CHIP 4K7 5%
RV69		042-04220-02	RES PRESET 2K CERMET 9.5MM SQ FLAT TOP A
R69		036-12100-00	RES M/F 0805 CHIP 10E 5%
R70		036-13220-00	RES M/F 0805 CHIP 220E 5%
R72		045-04470-01	RES NTC 4K7 5% 5MM DISC
R73		036-16220-00	RES M/F 0805 CHIP 220K 5%
RV74		042-06500-08	RES PRESET 500K CERMET 9.5MM SQ FLAT
R75		036-15100-00	RES M/F 0805 CHIP 10K 5%
R76		036-14470-00	RES M/F 0805 CHIP 4K7 5%
R77		036-14220-00	RES M/F 0805 CHIP 2K2 5%
R78		036-14100-00	RES M/F 0805 CHIP 1K 5%
R79		036-16100-00	RES M/F 0805 CHIP 100K 5%
R80		036-13100-00	RES M/F 0805 CHIP 100E 5%
R81		036-14100-00	RES M/F 0805 CHIP 1K 5%
R82		036-14220-00	RES M/F 0805 CHIP 2K2 5%
R83		036-14100-00	RES M/F 0805 CHIP 1K 5%
R84		036-14220-00	RES M/F 0805 CHIP 2K2 5%
R85		036-14100-00	RES M/F 0805 CHIP 1K 5%
R86		036-14100-00	RES M/F 0805 CHIP 1K 5%
R87		036-15100-00	RES M/F 0805 CHIP 10K 5%
R88		036-15100-00	RES M/F 0805 CHIP 10K 5%
R89		036-13100-00	RES M/F 0805 CHIP 100E 5%
R90		036-03100-02	RES 100E 1206 CHIP 200V 250MW RC01
R91		036-03330-03	L) RES 1218 PWR CHIP 330E 20% 1W
R92		036-03330-03	L) RES 1218 PWR CHIP 330E 20% 1W
R95		036-14100-00	RES M/F 0805 CHIP 1K 5%
R96		036-14470-00	RES M/F 0805 CHIP 4K7 5%
R97		036-14100-00	RES M/F 0805 CHIP 1K 5%
R98		036-15100-00	RES M/F 0805 CHIP 10K 5%
R99		036-14390-00	RES M/F 0805 CHIP 3K9 5%
R100		036-14100-00	RES M/F 0805 CHIP 1K 5%
R101		036-12100-00	RES M/F 0805 CHIP 10E 5%
R102		036-16220-00	RES M/F 0805 CHIP 220K 5%
R103		036-15330-00	RES M/F 0805 CHIP 33K 5%
R104		036-15150-00	RES M/F 0805 CHIP 15K 5%
R105		036-16470-00	RES M/F 0805 CHIP 470K 5%
R106		036-15150-00	RES M/F 0805 CHIP 15K 5%
R107		036-14390-00	RES M/F 0805 CHIP 3K9 5%
R108		036-15100-00	RES M/F 0805 CHIP 10K 5%
R109		036-14330-00	RES M/F 0805 CHIP 3K3 5%
R110		036-16100-00	RES M/F 0805 CHIP 100K 5%
R111		036-16220-00	RES M/F 0805 CHIP 220K 5%
R112		036-16220-00	RES M/F 0805 CHIP 220K 5%

Ref	Var	IPN	Description	Ref	Var	IPN	Description
R113		036-15270-00	RES M/F 0805 CHIP 27K 5%				
R115		036-16470-00	RES M/F 0805 CHIP 470K 5%				
R116		045-04470-01	RES NTC 4K7 5% 5MM DISC				
R117		036-15150-00	RES M/F 0805 CHIP 15K 5%				
R118		036-14390-00	RES M/F 0805 CHIP 3K9 5%				
R119		036-14820-00	RES M/F 0805 CHIP 8K2 5%				
R120		036-14680-00	RES M/F 0805 CHIP 6K8 5%				
R121		036-14100-00	RES M/F 0805 CHIP 1K 5%				
R122		036-14100-00	RES M/F 0805 CHIP 1K 5%				
R123		036-13470-00	RES M/F 0805 CHIP 470E 5%				
R124		036-13220-00	RES M/F 0805 CHIP 220E 5%				
R125		036-16100-00	RES M/F 0805 CHIP 100K 5%				
R126		036-16150-00	RES M/F 0805 CHIP 150K 5%				
R127		036-15100-00	RES M/F 0805 CHIP 10K 5%				
R128		036-16100-00	RES M/F 0805 CHIP 100K 5%				
R129		036-15220-00	RES M/F 0805 CHIP 22K 5%				
R130		036-15100-00	RES M/F 0805 CHIP 10K 5%				
R131		036-15100-00	RES M/F 0805 CHIP 10K 5%				
R132		036-13220-00	RES M/F 0805 CHIP 220E 5%				

Copyright TEL

T889 Mechanical & Miscellaneous Parts (220-01326-01)

IPN	Description
012-04150-01	CAP CER F/THRU 1N5 NO LEAD C1-C15
051-00006-02	SOLDER SPRING 1.3MM A4M1877 (x6) (LED wire joints)
065-00010-13	BEAD FERRITE 7D 1.9*0.9*3.8MM STACK POLE ASSEMBLE D.RANGE
065-00010-20	BEAD FERRITE BALUN 4B1 PHILIPS
200-00010-03	WIRE T/C 0.9MM
201-00030-01	WIRE #1 T/C WIRE 7/0.2MM PVC BROWN
201-00030-02	WIRE #1 T/C WIRE 7/0.2MM PVC RED
201-00030-03	WIRE #1 T/C WIRE 7/0.2MM PVC ORANGE
201-00030-04	WIRE #1 T/C WIRE 7/0.2MM PVC YELLOW
201-00030-05	WIRE #1 T/C WIRE 7/0.2MM PVC GREEN
201-00030-06	WIRE #1 T/C WIRE 7/0.2MM PVC BLUE
201-00030-07	WIRE #1 T/C WIRE 7/0.2MM PVC VIOLET
201-00030-09	WIRE #1 T/C WIRE 7/0.2MM PVC WHITE
201-00030-10	WIRE #1 T/C WIRE 7/0.2MM PVC BLACK
201-00050-12	CABLE AUTO 152 RED 28/0.3MM PVC
201-00050-25	CABLE AUTO 154 RED 41/0.3MM PVC
201-00050-26	CABLE AUTO 154 BLACK 41/0.3MM PVC
206-00010-11	CABLE COAX 50 OHM RG316-U PTFE
206-00010-15	CABLE COAX 50 OHM RG223-U DOUBLE SCRN (exciter/PA connecting lead)
220-01326-01	PCB T889 90W 800-870M PA
240-00010-55	PLUG 15 WAY D RANGE WIRE WRAP PINS PNL MTG
240-00100-06	PLUG COAX N TYPE CORD MTG CAPTIVE CONTACT (exciter/PA connecting lead)
240-00100-10	PLUG COAX BNC CORD MTG CAPTIVE & CLAMPED (exciter/PA connecting lead)
240-00100-43	PLUG COAX MINI PIN PLUG CRIMP 1.5D COAX FIT TO COAX.
240-02010-54	SKT 15WAY DRANGE PNL MTG 125 DEG C
240-02100-17	SKT COAX BNC PNL JACK CAPTIVE/CLAMPED FIT TO COAX
240-02100-51	SKT N-TYPE FLANGE FEMALE SEMI-RIGID
240-06010-14	CLAMP LATCHING 15 WAY D RANGE
240-06010-15	BLOCK LATCHING 15WAY D RANGE
258-00010-03	FAN 12V 119 X 119 X 25MM TUBE AXIAL
302-05204-00	BRKT A3M2314 F/THRU MTG T859
303-11182-01	HEATSINK T889 COMPLETE D-CAST MECH, DRILLED
303-23117-00	COVER COMPL A2M2223/2 A2M2223/1 SIDE
303-50005-00	CONTACT A4M2311 SPRING EARTH T858
306-01010-00	FERRULE A4M948 HANDLE FXD EQUIP
308-01007-00	HANDLE A4M949 FXD EQUIP
316-06515-00	PNL FRT T889 SCRND COMPLETE

IPN	Description
318-01011-00	RAIL A2M1872 BOTTOM T377 PA
318-01012-00	RAIL A3M1873 TOP T377 PA
319-01152-00	SHIELD A3M2250 F/THRU MTG T857 ASSEMBLE D.RANGE
319-01186-00	SHIELD WALL T889 HARMONIC FILTER
319-01187-00	SHIELD LID T889 HARMONIC FILTER
319-30035-00	SPACER A4M1469 FRT PNL T359-02
319-30061-00	SPACER PLATE T889 WIRELINE
319-30062-00	SPACER T889 PRE DRIVER TRANSISTOR
319-40009-00	STRAP RF PWR XSTR EARTHING T889
319-40010-00	STRAP RESISTOR EARTHING T889
345-00040-06	SCREW M3*8MM PAN POZI ST BZ
345-00040-09	SCREW M3*6MM CSK POZI TRUNCATED HEAD ST BZ
345-00040-16	SCREW M3X20MM PAN POZI ST BZ
345-00040-20	SCREW M3*8MM BUTTON SKT HD BLACK ZINC PHOS
349-00020-07	(L) SCREW 4-40 X 5/16 PAN POZI TAPTITE BLACK
349-00020-07	(L) SCREW 4-40 X 5/16 PAN POZI TAPTITE BLACK
349-00020-09	SCREW TAPTITE 4-40X3/8 IN PAN POZI BLACK
349-00020-43	SCREW TAPTITE M4X12MM PAN POZI BZ
349-00020-49	SCREW TAPTITE M4X35MM PAN POZI BZ
349-00020-50	SCREW TAPTITE 4-40 * 5/8 PAN POZI BLACK
352-00010-29	NUT M4 NYLOC HEX
353-00010-10	WASHER M3 FLAT 7MM*0.6MM ST BZ
356-00010-03	TAG SOLDER 3MM LONG M614/3.2
356-00010-03	TAG SOLDER 3MM LONG M614/3.2,Q4,Q6,Q7
356-00010-26	PIN TRACK HARWIN T1559-01 FOR 1.6MM PCB
357-00010-45	CLAMP CABLE 4.8MM P CLIP
360-00010-41	BUSH SHORTY BLACK HEYCO B-187-125
362-00010-07	GASKET SIL INSULATING TO-220
362-00010-13	BUSH INSULATING 1.1MM TOP HAT
362-00010-33	GROMMET LED MTG 3MM LO CURRENT LEDS
365-00100-20	LABEL WHITE S/A 28X11MM QUIKSTIK RW718/4
369-00010-14	TIE CABLE NYLON 100*2.6MM
399-00010-56	BAG PLASTIC 200*250MM
400-00020-07	SLEEVING 2MM SIL RUBBER Fit to LED's, x30mm on each LED.
400-00020-30	HEATSHRINK 3MM
410-00010-43	PKG T296 AMPAC REF 73-46

Copyright TEL

T889 Grid Reference Index (IPN 220-01326-01)

How To Use This Grid Reference Index

The first digit in the PCB layout reference is a "1" or "2", indicating the top or bottom side layout respectively, and the last two characters give the location of the component on that diagram.

The first digit in the circuit diagram reference is the sheet number, and the last two characters give the location of the component on that sheet.

Device	PCB	Circuit
C1	1:S2	1-A4
C2	1:R5	1-D3
C3	1:R5	1-D3
C6	1:S6	1-D4
C7	1:S5	1-C4
C9	1:R7	1-E3
*C10	1:R7	1-F4
*C11	1:R7	1-F3
*C12	1:Q7	1-G3
C13	1:R8	1-H3
C15	1:N8	1-I4
C14	1:R8	1-H3
C16	1:R8	1-G4
C17	1:R9	1-G4
C18	1:Q9	1-F4
C19	1:R7	1-E3
*C20	1:K2	1-K7
*C21	1:K2	1-L7
C22	1:K2	1-M7
C23	1:K2	1-M7
C24	1:J1	1-O7
C25	1:F3	1-P7
*C26	1:K4	1-K5
*C27	1:K4	1-L5
C28	1:K4	1-M5
C29	1:J2	1-N6
C30	1:K4	1-M5
C31	1:J5	1-O5
C32	1:H3	1-P5
*C33	1:K6	1-K3
*C34	1:K7	1-L3
C35	1:K7	1-M3
C36	1:K7	1-M3
C37	1:J6	1-N4
C38	1:H8	1-P3
C39	1:H1	1-O6
*C40	1:K9	1-K1
*C41	1:K9	1-L1
C42	1:K9	1-M1
C43	1:K9	1-M1
C44	1:J10	1-N2
C45	1:F8	1-P1
C46	1:J9	1-O2
C47	1:H10	1-O2
C48	1:E7	1-S5
C50	1:E10	1-S4
C51	1:E8	1-T3
C52	1:E7	1-S3
C53	1:D9	1-T4
C54	1:C8	1-T4
C55	1:C8	1-U4
C56	1:B8	1-V4
C57	1:A8	1-V4
C58	1:J6	1-O4
C59	1:J7	1-O4
C60	1:Q2	2-B2
C61	1:Q2	2-C2
C62	1:Q1	2-D2
C64	1:G3	1-R5

Device	PCB	Circuit
C65	1:U7	2-P1
C66	1:T3	1-B4
C67	1:J2	1-O6
C68	1:J7	1-P4
C69	1:U6	2-F0
C70	1:U5	2-D0
C71	1:V8	2-G0
C72	1:J8	1-P2
C73	1:Q9	1-F4
C74	1:S5	1-B4
C76	1:V10	2-B8
C77	1:V10	2-B8
C78	1:U10	2-D7
C81	1:T2	2-F6
C84	1:V9	2-B4
C85	1:V9	2-B4
C87	1:S2	2-E2
C88	1:S8	2-R1
C89	1:V7	2-D0
C90	1:V7	2-C0
C91	1:V8	2-L2
C92	1:U8	2-P3
C93	1:U8	2-N2
C94	1:T7	2-P0
C95	1:T7	2-P0
C96	1:V5	2-K0
C97	1:M9	1-U9
C98	1:N9	1-V9
C99	1:V6	2-L0
C102	1:U8	2-Q2
C103	1:T8	2-Q2
C104	1:U7	2-Q3
C105	1:T8	2-R3
C106	1:T8	2-R2
C107	1:U9	2-Q1
C108	1:U3	2-J8
C109	1:U4	2-H4
C114	1:V10	2-A8
C115	1:V9	2-A4
C116	1:U5	2-R7
C117	1:W7	2-P9
C118	1:W7	2-P8
C119	1:W8	2-P7
C120	1:W8	2-P6
C121	1:V3	2-P5
C122	1:V3	2-P4
C123	1:U5	2-Q7
C124	1:U5	2-Q7
C125	1:U5	2-R8
C126	1:U3	2-N6
C127	1:U3	2-N7
C128	1:V3	2-M4
C129	1:V3	2-N5
C130	1:U9	2-C8
C131	1:U9	2-C4
C132	1:R5	1-C4
D1	1:F10	1-S4
D2	1:E8	1-T4
D3	1:Q2	2-B1

Device	PCB	Circuit
D4	1:U8	2-F1
D5	1:W9	2-C9
D6	1:T2	2-G6
D10	1:W10	2-D5
D11	1:W8	2-C5
D13	1:S2	2-E2
IC1	1:V5	2-E8
		2-D5
		2-N0
		2-L1
		2-H0
IC2	1:V8	2-C1
IC3	1:V3	2-H8
		2-G4
		2-N6
		2-N5
		2-H0
IC4	1:U7	2-E0
IC5	1:U7	2-F0
		2-P3
		2-P0
L1	1:S4	1-C4
L2	1:P5	1-C4
L3	1:P5	1-C3
L4	1:R6	1-D4
L5	1:S6	1-D4
L6	1:S5	1-C5
L7	1:P7	1-F4
L8	1:P6	1-F3
L9	1:R8	1-H4
L10	1:S9	1-H4
L11	1:R6	1-E4
L12	1:N8	1-H4
L13	1:P5	1-I4
L14	1:N5	1-I5
L15	1:M5	1-J5
L16	1:P2	1-J7
L17	1:L3	1-K7
L18	1:L3	1-K7
L19	1:J1	1-N7
L20	1:J1	1-N7
L21		1-W4
L22	1:F2	1-O7
L26	1:L3	1-J5
L27	1:L5	1-K5
L28	1:L5	1-K5
L29	1:K4	1-N5
L30	1:J5	1-N5
L32	1:J3	1-O5
L33	1:L7	1-J3
L34	1:L6	1-K3
L35	1:L6	1-K3
L36	1:K7	1-N4
L37	1:J6	1-N4
L39	1:J7	1-O3
L40	1:H5	1-Q4
L41	1:G5	1-Q5
L42	1:F5	1-R5
L43	1:P8	1-J1

Device	PCB	Circuit
L44	1:L8	1-K1
L45	1:L8	1-K1
L46	1:K9	1-N2
L47	1:J10	1-N2
L49	1:F8	1-O1
L50	1:F8	1-S5
L51	1:N9	1-U9
L52	1:E7	1-S3
L53	1:D9	1-T4
L54	1:C8	1-U4
L55	1:B9	1-U4
L56	1:A8	1-V4
L58	1:G2	1-R5
L60	1:Q2	2-B2
L61	1:Q1	2-C2
L63	1:S2	1-A4
L64	1:H7	1-P3
L65	1:H2	1-O7
L66	1:Q2	1-F5
LINK1	1:U8	2-F1
LINK2	1:V7	2-M2
P1	1:S2	1-A4
P4	1:A8	1-W4
P5	1:T5	2-S6
PL1	1:A3	2-A2
		2-A1
		2-A2
		2-A2
		2-A1
		2-A9
		2-A6
		2-A0
		2-A0
		2-A0
		2-A1
		2-A1
		2-A5
		2-A3
		2-A8
PIN1	1:M8	
PIN2	1:P8	
PIN3	1:M3	
PIN4	1:P3	
PIN5	1:H3	
PIN6	1:F3	
PIN7	1:H8	
PIN8	1:D9	
Q1	1:R6	1-D4
Q2	1:R7	1-G4
Q3	1:K2	1-M7
Q4	1:K4	1-M5
Q5	1:K7	1-M3
Q6	1:K9	1-M1
Q10	1:V10	2-B8
Q11	1:U9	2-C8
Q12	1:V9	2-B5
Q13	1:U9	2-C4
Q15	1:T8	2-Q2
Q16	1:T10	2-R2

Device	PCB	Circuit
Q17	1:U5	2-R7
Q18	1:U5	2-S8
Q19	1:W7	2-P8
Q20	1:W8	2-Q7
Q21	1:W3	2-Q5
Q22	1:W5	2-M0
Q23	1:T7	2-P0
Q24	1:T8	2-Q0
Q25	1:U7	2-P2
R1	1:Q5	1-C3
R2	1:S6	1-D4
R3	1:S5	1-C4
R4	1:Q7	1-F3
R5	1:R9	1-G4
R6	1:R9	1-G4
R7	1:M10	1-I4
R8	1:M1	1-I5
R9	1:M1	1-J5
R10	1:L3	1-J7
R11	1:J1	1-N7
R12	1:L5	1-J5
R13	1:J5	1-N5
R14	1:L6	1-J3
R15	1:J6	1-N4
R16	1:F10	1-Q4
R17	1:G1	1-Q6
R17A	1:F1	1-Q5
R18	1:F1	1-S5
R19	1:L8	1-J1
R20	1:J10	1-N2
R21	1:J9	1-O2
R22	1:E10	1-T4
R23	1:F9	1-S4
R24	1:J6	1-O4
R29	1:J2	1-N6
R36	1:W9	2-C9
R37	1:V5	2-K0
R37A	1:W5	2-K0
R38	1:U6	2-E8
R42	1:U4	2-F8
RV43	1:V1	2-G6
R44	1:T8	2-G6
R47	1:U5	2-E8
RV48	1:V1	2-F8
R49	1:W10	2-D6
R50	1:V8	2-C6
RV52	1:T1	2-E5
R55	1:V6	2-D4
R56	1:U6	2-E4
RV57	1:S1	2-E3
R57	1:R3	1-A3
R57A	1:S3	1-B3
R58	1:T8	2-G5
R59	1:S3	1-B4
R59A	1:S3	1-B4
R60	1:R3	1-B3
R60A	1:R4	1-B3
R61	1:V8	2-C0
R62	1:V8	2-C0
#RV63	1:U6	2-M3
#RV63A	1:V7	2-M2
R64	1:U8	2-N3
R65	1:U7	2-P1
R66	1:U9	2-P2
R67	1:V6	2-K1
R68	1:V6	2-K2
RV69	1:V2	2-E0
R69	1:U6	2-F0
R70	1:U7	2-F0
R72	1:M9	1-T9
R73	1:V5	2-L0
RV74	1:V2	2-M1
R75	1:V6	2-M0
R76	1:V6	2-M0
R77	1:U8	2-Q3
R78	1:U8	2-Q2

Device	PCB	Circuit
R79	1:U7	2-N1
R80	1:T8	2-R3
R81	1:U6	2-D7
R82	1:U6	2-D8
R83	1:V9	2-C4
R84	1:V6	2-C4
R85	1:S2	2-E3
R86	1:U4	2-G7
R87	1:U3	2-J8
R88	1:U4	2-H4
R89	1:U9	2-Q2
R90	1:T8	2-R2
R91	1:S8	2-Q1
R92	1:S9	2-R1
R95	1:R1	2-C3
R96	1:U2	2-E5
R97	1:T2	2-D6
R98	1:U3	2-J9
R99	1:U4	2-H4
R100	1:V5	2-K2
R101	1:V8	2-L3
R102	1:U3	2-M8
R103	1:U3	2-M6
R104	1:W7	2-P7
R105	1:U3	2-N7
R106	1:W7	2-P7
R107	1:V8	2-P6
R108	1:V8	2-N8
R109	1:W7	2-N9
R110	1:U2	2-M5
R111	1:U2	2-M4
R112	1:U2	2-M4
R113	1:V3	2-N4
R115	1:V3	2-N5
R116	1:V3	2-M5
R117	1:V3	2-P5
R118	1:V3	2-P4
R119	1:U6	2-Q7
R120	1:U5	2-Q8
R121	1:U5	2-Q8
R122	1:W6	2-L6
R123	1:V7	2-M2
R124	1:V7	2-M2
R125	1:U7	2-N0
R126	1:T7	2-N1
R127	1:T7	2-Q1
R128	1:T8	2-Q0
R129	1:T7	2-Q0
R130	1:S8	2-Q1
R131	1:T7	2-R0
R132	1:U8	2-N3
TB1		1-I4
TB2		1-I4
TB3		1-P7
TB4		1-Q7
TB5		1-P5
TB6		1-P5
TB7		1-P3
TB8		1-P3
TB9		1-P1
TB10		1-Q1

Device	PCB	Circuit

Device	PCB	Circuit

Copyright TEL

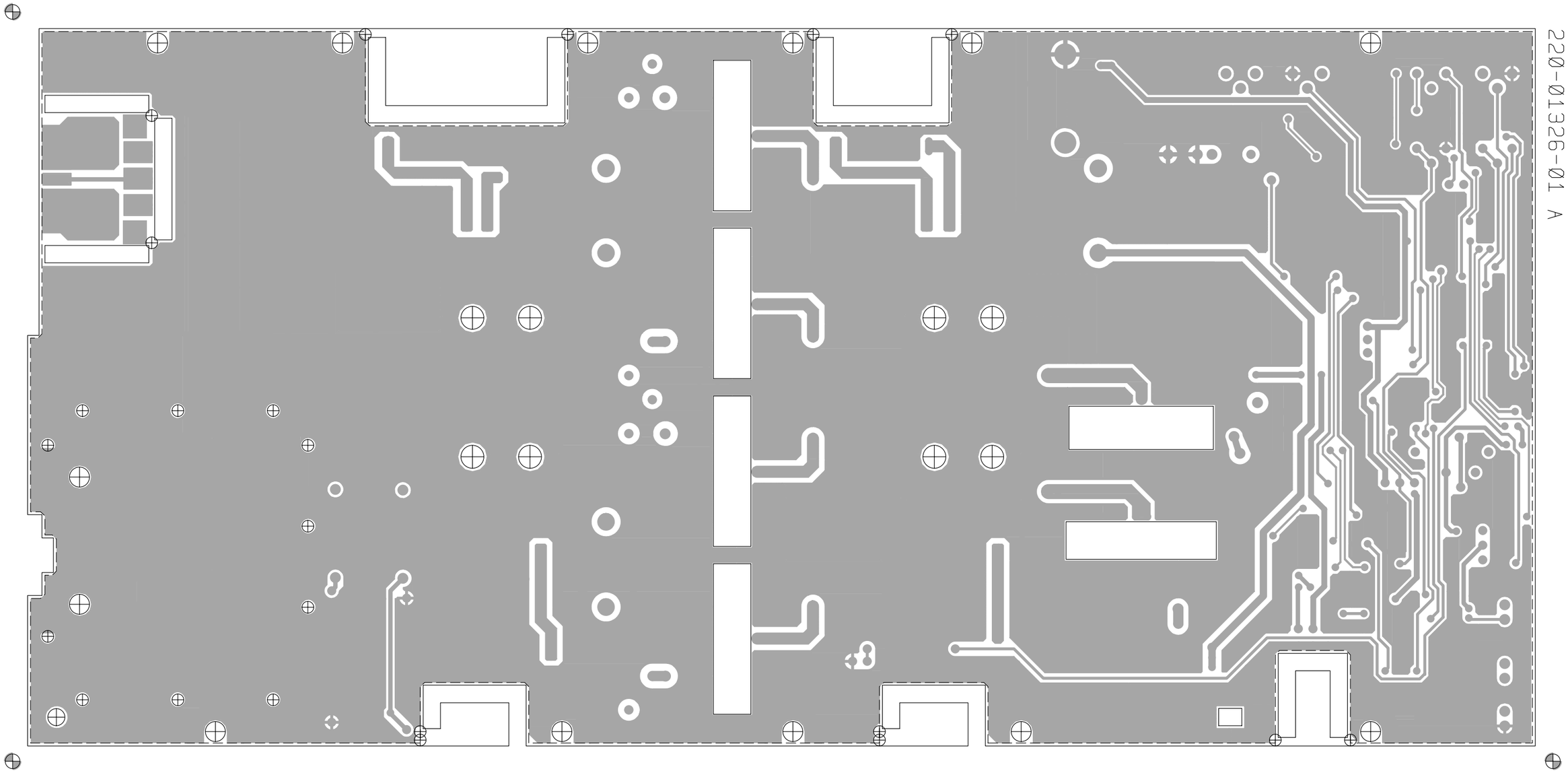

T889 PCB Layout
Bottom Side
220-01326-01

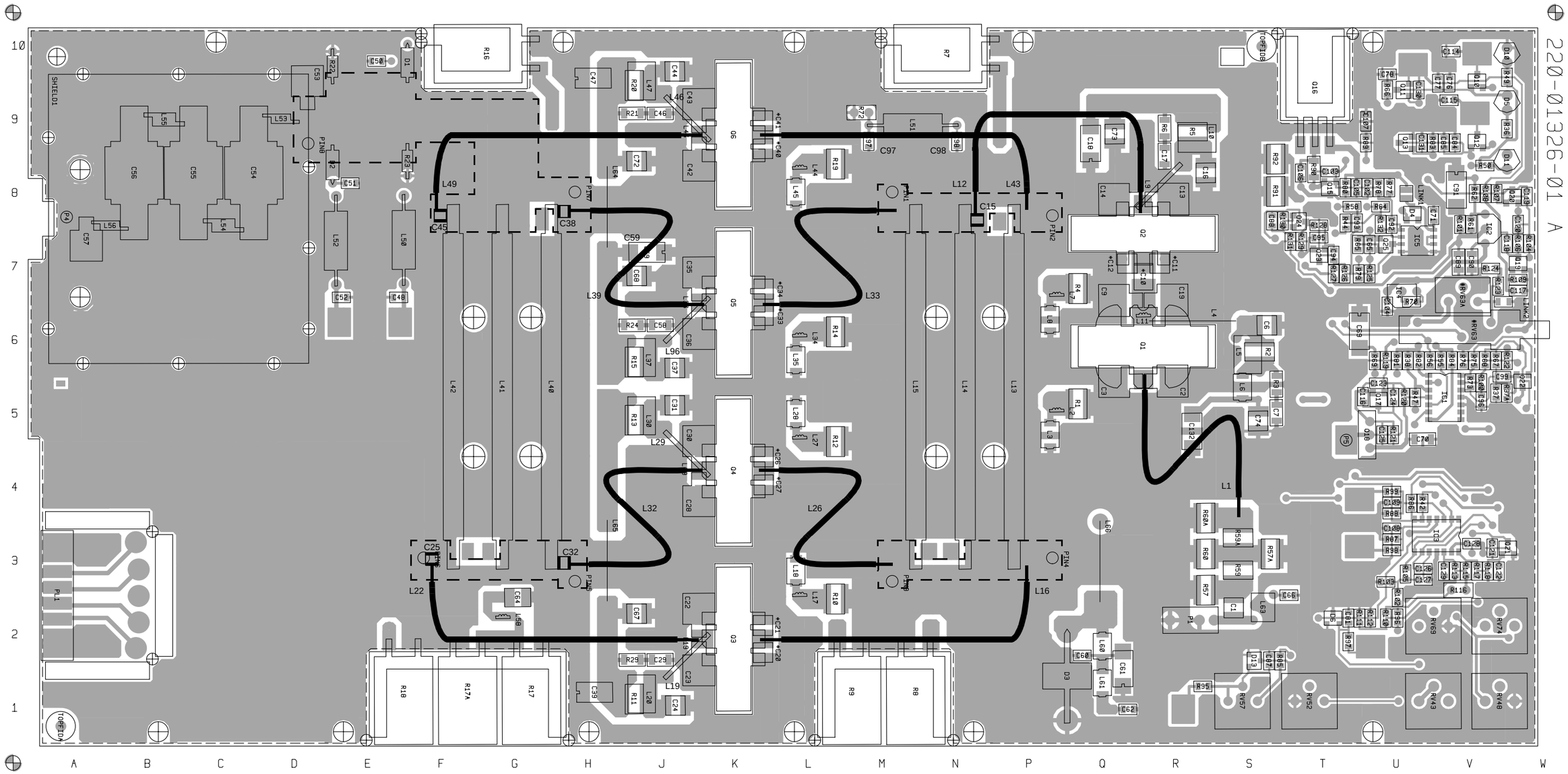

T889 PCB Layout
Top Side
220-01326-01

Copyright TEL

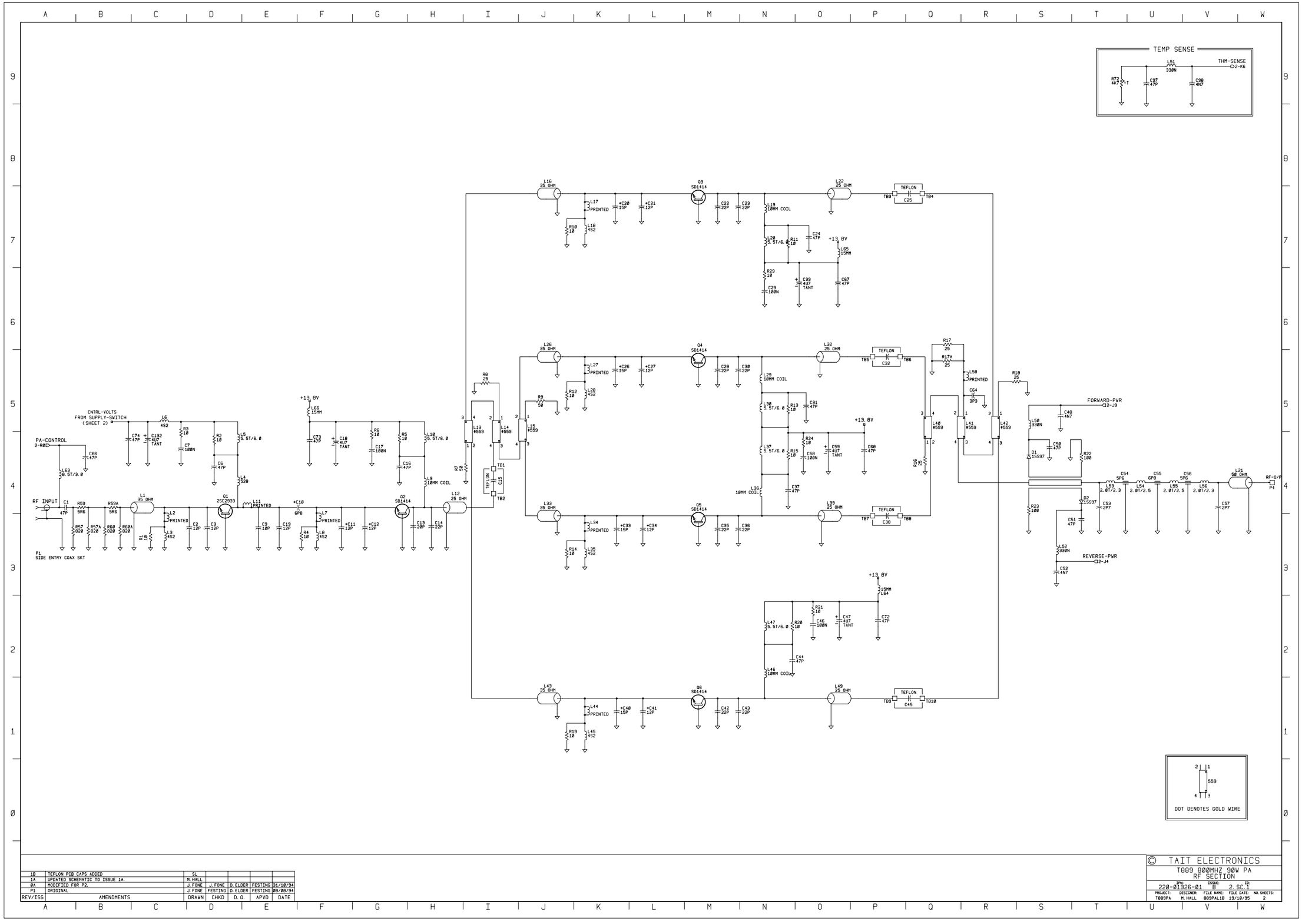
TEMP SENSE
THM-SENSE
CNTRL-VOLTS FROM SUPPLY-SWITCH (SHEET 2)
PA-CONTROL
RF INPUT
P1 SIDE ENTRY COAX SKT
FORWARD-PWR
REVERSE-PWR
RF-O/P
TEFLON
DOT DENOTES GOLD WIRE
1B TEFLON PCB CAPS ADDED
1A UPDATED SCHEMATIC TO ISSUE 1A.
0A MODIFIED FOR P2.
P1 ORIGINAL
REV/ISS AMENDMENTS DRAWN CHKD D.O. APVD DATE
© TAIT ELECTRONICS
T889 800MHZ 90W PA
RF SECTION
220-01326-01 B 2 SC 1
T889PA M.HALL 889PAL1B 19/10/95 2

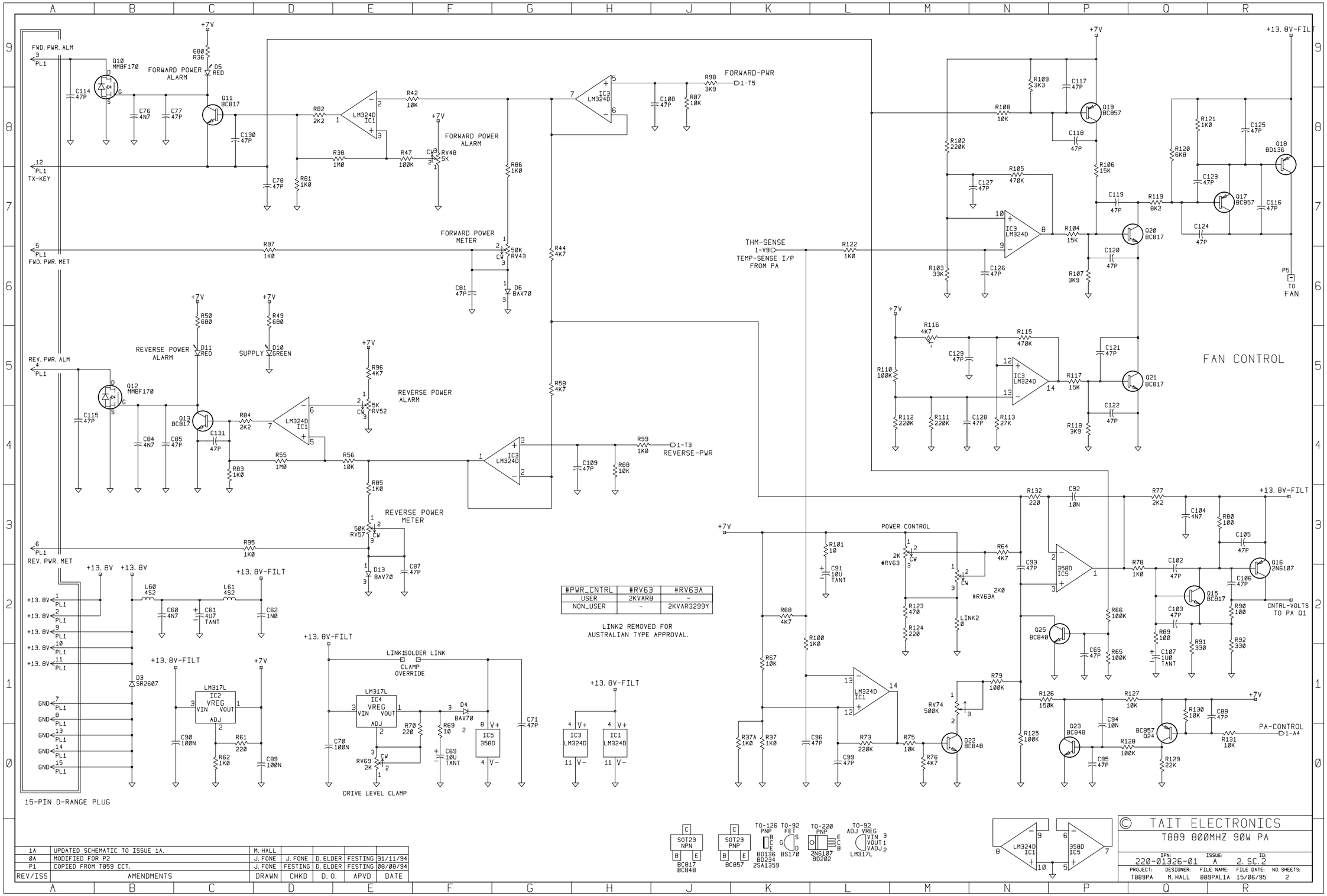

#PWR_CNTRL	#RV63	#RV63A
USER	2KVAR8	-
NON_USER	-	2KVAR3299Y

REV/ISS	AMENDMENTS	DRAWN	CHKD	D. O.	APVD	DATE
1A	UPDATED SCHEMATIC TO ISSUE 1A.	M. HALL				
0A	MODIFIED FOR P2	J. FONE	J. FONE	D. ELDER	FESTING	31/11/94
P1	COPIED FROM T859 CCT.	J. FONE	FESTING	D. ELDER	FESTING	08/08/94

T889 Control Section - 220-01326-01

Copyright TEL