Table 5. Symbols on packaging (continued)

Symbol	Description
	Do not resterilize
	Do not reuse
	Do not use if package is damaged
	Consult instructions for use
	Temperature limitation
	Place telemetry wand here

Table 5. Symbols on packaging (continued)

Symbol	Description
	Open here
EC REP	Authorized Representative in the European Community
	Manufacturer
	Pacemaker RV
	Pacemaker RA, RV
	CRT-P RA, RV, LV

Table 5. Symbols on packaging (continued)

Symbol	Description
	Uncoated device
RF	RF Telemetry

CHARACTERISTICS AS SHIPPED

Refer to the table for pulse generator settings at shipment (Table 6 on page 38).

Table 6. Characteristics as shipped

Parameter	Setting
Pacing Mode	Storage
Pacing Therapy available	DDDR
Sensor	Accelerometer
Pace/Sense Configuration	RA: BI/BI
Pace/Sense Configuration	RV: BI/BI
Pace/Sense Configuration	LV: Off

Table 6. Characteristics as shipped (continued)

Parameter	Setting
Pace/Sense Configuration	LV: BI/BI (VALITUDE X4 Models)
Magnet Rate	100 ppm

The pulse generator is shipped in a power-saving Storage mode to extend its shelf life. In Storage mode, all features are inactive except:

- Telemetry support, which allows interrogation and programming
- Real-time clock
- STAT PACE command

The device leaves Storage mode when one of the following actions occurs; however, programming other parameters will not affect the Storage mode:

- STAT PACE is commanded
- The pulse generator automatically detects lead insertion (refer to "Implanting the Pulse Generator" on page 52)
- Device Mode is programmed to Exit Storage

Once you have programmed the pulse generator out of Storage mode, the device cannot be reprogrammed to that mode.

X-RAY IDENTIFIER

The pulse generator has an identifier that is visible on x-ray film or under fluoroscopy. This identifier provides noninvasive confirmation of the manufacturer and consists of the following:

- The letters, BSC, to identify Boston Scientific as the manufacturer

- The number, 012, for VALITUDE pulse generators. This identifies the Model 2869 PRM software application needed to communicate with the pulse generator.
- The number, 011, for INTUA and INVIVE pulse generators. This identifies the Model 2869 PRM software application needed to communicate with the pulse generator.

The x-ray identifier is embedded in the header of the device. For a left side pectoral implant, the identifier will be visible by x-ray or fluorography at the approximate location shown (Figure 1 on page 40).

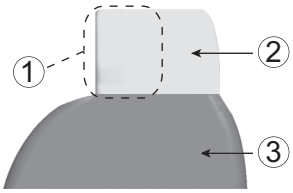

[1] X-Ray Identifier [2] Header [3] Pulse Generator Case

Figure 1. X-ray identifier

For information on identifying the device via the PRM, refer to the PRM Operator's Manual.

The pulse generator model number is stored in device memory and is shown on the PRM Summary screen once the pulse generator is interrogated.

FEDERAL COMMUNICATIONS COMMISSION (FCC)

This device complies with Title 47, Part 15 of the FCC rules. Operation is subject to the following two conditions:

- This device may not cause harmful interference, and
- This device must accept any interference received, including interference that may cause undesired operation.

For pulse generators operating with a transmit frequency of 402 to 405 MHz: this transmitter is authorized by rule under the Medical Device Radiocommunication Service (in part 95 of the FCC Rules) and must not cause harmful interference to stations operating in the 400.150–406.000 MHz band in the Meteorological Aids (i.e., transmitters and receivers used to communicate weather data), the Meteorological Satellite, or the Earth Exploration Satellite Services and must accept interference that may be caused by such stations, including interference that may cause undesired operation. This transmitter shall be used only in accordance with the FCC Rules governing the Medical Device Radiocommunication Service. Analog and digital voice communications are prohibited. Although this transmitter has been approved by the Federal Communications Commission, there is no guarantee that it will not receive interference or that any particular transmission from this transmitter will be free from interference.

CAUTION: Changes or modifications not expressly approved by Boston Scientific could void the user's authority to operate the equipment.

VALITUDE devices operate with a transmit frequency between 402 to 405 MHz and use FSK modulation. The FCC ID is ESCCRMU22814.

INTUA and INVIVE devices operate with a transmit frequency of 916.5 MHz and use ASK modulation. The FCC ID is ESCCRMV17311.

Wanded telemetry operates at 57 kHz and uses QPSK modulation.

PULSE GENERATOR LONGEVITY

Based on simulated studies, it is anticipated that these pulse generators have average longevity to explant as shown below.

The longevity expectations, which account for the energy used during manufacture and storage, apply at the conditions shown in the table along with the following:

- Assumes 70 ppm LRL, DDDR mode; 100% biventricular pacing; 15% atrium pacing and 0.4 ms pacing Pulse Width (RA, RV, LV); RA Impedance 500 Ω; sensors On.
- These calculations also assume EGM Onset is on, and that the pulse generator spends 6 months in Storage mode during shipping and storage.

The following longevity tables and conditions of use apply to VALITUDE devices.

Table 7. Pulse generator life expectancy estimation (implant to explant)

All Models[a]			
Pacing Amplitude		Longevity (years) at 500 Ω and 700 Ω Pacing Impedance (RV and LV)	
RA/RV	LV	500 Ω	700 Ω
2.5 V	3.0 V	10.3	11.2
2.5 V	3.5 V	9.6	10.6
3.5 V	3.5 V	8.3	9.4
3.5 V	5.0 V	6.7	7.8

a. Assumes ZIP wandless telemetry use for 3 hours at implant time and for 40 minutes annually for in-clinic follow-up checks.

Longevities at an LRL of 70 ppm, 500 Ω, 0.5 ms, 100% paced, sensors On, and pacing mode most comprehensive are: All models at 2.5 V = 8.9 years, at 5.0 V = 3.5 years.

NOTE: *The energy consumption in the longevity table is based upon theoretical electrical principles and verified via bench testing only.*

The pulse generator longevity may increase with a decrease in any of the following:

- Pacing rate
- Pacing pulse amplitude(s)
- Pacing pulse width(s)
- Percentage of paced to sensed events

Longevity is also affected in the following circumstances:

- A decrease in pacing impedance may reduce longevity.
- When the Respiratory Sensor is programmed Off for the life of the device, longevity is increased by approximately 4 months.
- When Patient Triggered Monitor is programmed to On for 60 days, longevity is reduced by approximately 5 days.
- One hour of additional ZIP wandless telemetry reduces longevity by approximately 6 days.
- The following LATITUDE usage will decrease longevity by approximately 7 months: Daily Device Check on, monthly Full Interrogations (scheduled remote follow ups, and quarterly patient-initiated interrogations). Daily Device Checks and quarterly Full Interrogations will decrease longevity by approximately 6 months.
- Five patient-initiated LATITUDE Communicator interrogations per week for a year reduces longevity by approximately 30 days.

- An additional 6 months in Storage mode prior to implant will reduce longevity by 60 days. Assumes implanted settings of 70 ppm LRL; DDDR mode; 15% atrium pacing; 100% biventricular pacing; 0.4 ms pacing Pulse Width; 500 Ω pacing Impedance; 2.5 V pacing pulse Amplitude (RA, RV); 3.5 V pacing pulse Amplitude (LV).

Device longevity may also be affected by:

- Tolerances of electronic components
- Variations in programmed parameters
- Variations in usage as a result of patient condition

The following longevity tables and conditions of use apply to INTUA and INVIVE devices.

Table 8. Pulse generator life expectancy estimation (implant to explant)

All Models[a] [b]			
Pacing Amplitude		Longevity (years) at 500 Ω and 700 Ω Pacing Impedance (RV and LV)	
RA/RV	LV	500 Ω	700 Ω
2.5 V	3.0 V	8.4	9.1
2.5 V	3.5 V	7.9	8.6

Table 8. Pulse generator life expectancy estimation (implant to explant) (continued)

All Models[a] [b]			
Pacing Amplitude		**Longevity (years) at 500 Ω and 700 Ω Pacing Impedance (RV and LV)**	
RA/RV	**LV**	**500 Ω**	**700 Ω**
3.5 V	3.5 V	6.9	7.8
3.5 V	5.0 V	5.6	6.5

a. Assumes ZIP wandless telemetry use for 3 hours at implant time and for 20 minutes during each quarterly follow-up.
b. Assumes standard use of the LATITUDE Communicator as follows: Daily Alert Interrogation On, weekly scheduled remote follow ups, and quarterly patient-initiated interrogations.

Longevities at an LRL of 70 ppm, 500 Ω, 0.5 ms, 100% paced, sensors On, and pacing mode most comprehensive are: All models at 2.5 V = 7.3 years, at 5.0 V = 3.9 years.

NOTE: *The energy consumption in the longevity table is based upon theoretical electrical principles and verified via bench testing only.*

The pulse generator longevity may increase with a decrease in any of the following:

- Pacing rate
- Pacing pulse amplitude(s)
- Pacing pulse width(s)
- Percentage of paced to sensed events

Longevity is also affected in the following circumstances:

- A decrease in pacing impedance may reduce longevity.

- When the Respiratory Sensor is programmed Off for the life of the device, longevity is increased by approximately 4 months.
- When Patient Triggered Monitor is programmed to On for 60 days, longevity is reduced by approximately 5 days.
- One hour of additional ZIP wandless telemetry reduces longevity by approximately 9 days.
- Five patient-initiated LATITUDE Communicator interrogations per week for a year reduces longevity by approximately 14 days.
- An additional 6 months in Storage mode prior to implant will reduce longevity by 60 days. Assumes implanted settings of 70 ppm LRL; DDDR mode; 15% atrium pacing; 100% biventricular pacing; 0.4 ms pacing Pulse Width; 500 Ω pacing Impedance; 2.5 V pacing pulse Amplitude (RA, RV); 3.5 V pacing pulse Amplitude (LV).

Device longevity may also be affected by:

- Tolerances of electronic components
- Variations in programmed parameters
- Variations in usage as a result of patient condition

Refer to the PRM Summary and Battery Detail Summary screens for an estimate of pulse generator longevity specific to the implanted device.

WARRANTY INFORMATION

A limited warranty certificate for the pulse generator is available at www.bostonscientific.com. For a copy, contact Boston Scientific using the information on the back cover.

PRODUCT RELIABILITY

It is Boston Scientific's intent to provide implantable devices of high quality and reliability. However, these devices may exhibit malfunctions that may result in lost or compromised ability to deliver therapy. These malfunctions may include the following:

- Premature battery depletion
- Sensing or pacing issues
- Error codes
- Loss of telemetry

Refer to Boston Scientific's CRM Product Performance Report on www.bostonscientific.com for more information about device performance, including the types and rates of malfunctions that these devices have experienced historically. While historical data may not be predictive of future device performance, such data can provide important context for understanding the overall reliability of these types of products.

Sometimes device malfunctions result in the issuance of product advisories. Boston Scientific determines the need to issue product advisories based on the estimated malfunction rate and the clinical implication of the malfunction. When Boston Scientific communicates product advisory information, the decision whether to replace a device should take into account the risks of the malfunction, the risks of the replacement procedure, and the performance to date of the replacement device.

PATIENT COUNSELING INFORMATION

The following topics should be discussed with the patient prior to discharge.

- External defibrillation—the patient should contact their physician to have their pulse generator system evaluated if they receive external defibrillation
- Signs and symptoms of infection
- Symptoms that should be reported (e.g., sustained high-rate pacing requiring reprogramming)
- Protected environments—the patient should seek medical guidance before entering areas protected by a warning notice that prevents entry by patients who have a pulse generator
- Avoiding potential sources of EMI in home, work, and medical environments
- Reliability of their pulse generator ("Product Reliability" on page 46)

- Activity restrictions (if applicable)
- Minimum heart rate (lower rate limit of the pulse generator)
- Frequency of follow up
- Travel or relocation—Follow-up arrangements should be made in advance if the patient is leaving the country of implant
- Patient ID card—the patient should be advised to carry their patient ID card at all times (a temporary patient ID card is provided with the device, and a permanent ID card will be sent to the patient 4 to 6 weeks after the implant form is received by Boston Scientific)

Patient Handbook

The Patient Handbook is provided for each device.

It is recommended that you discuss the information in the Patient Handbook with concerned individuals both before and after implantation so they are fully familiar with pulse generator operation.

For additional copies, contact Boston Scientific using the information on the back cover.

LEAD CONNECTIONS

Lead connections are illustrated below.

CAUTION: Prior to implantation, confirm the lead-to-pulse generator compatibility. Using incompatible leads and pulse generators can damage the connector and/or result in potential adverse consequences, such as undersensing of cardiac activity or failure to deliver necessary therapy.

CAUTION: If the Lead Configuration is programmed to Bipolar when a unipolar lead is implanted, pacing will not occur.

The following lead connections apply to VALITUDE devices.

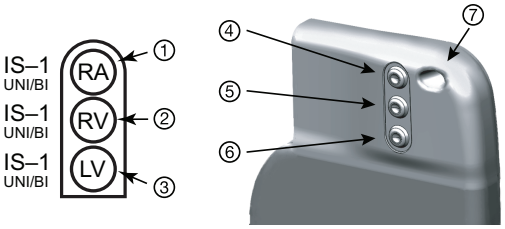

[1] RA: White [2] RV: White [3] LV: Green [4] RA [5] RV [6] LV [7] Suture Hole

Figure 2. Lead connections and setscrew locations, RA: IS-1, RV: IS-1, LV: IS-1

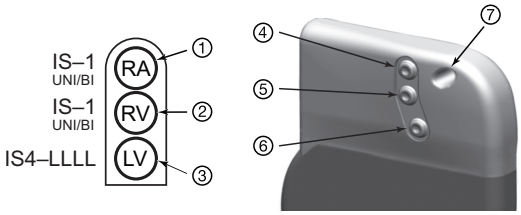

[1] RA: White [2] RV: White [3] LV: Green [4] RA [5] RV [6] LV [7] Suture Hole

Figure 3. Lead connections and setscrew locations, RA: IS-1, RV: IS-1, LV: IS4-LLLL

The following lead connections apply to INTUA and INVIVE devices.

[1] LV [2] RA [3] RV [4] Suture Hole

Figure 4. Lead connections and setscrew locations, RA: IS-1, RV: IS-1, LV: IS-1

[1] LV [2] RA [3] RV [4] Suture Hole

Figure 5. Lead connections and setscrew locations, RA: IS-1, RV: IS-1, LV: LV-1

NOTE: *The pulse generator case is used as a pace electrode when the pulse generator has been programmed to a unipolar lead setting.*

IMPLANTING THE PULSE GENERATOR

Implant the pulse generator by performing the following steps in the sequence provided. Some patients may require pacing therapies immediately upon connecting the leads to the pulse generator. If modifications to the nominal settings are needed, consider programming the pulse generator before or in parallel with implanting the lead system and forming the implantation pocket.

Step A: Check Equipment

It is recommended that instrumentation for cardiac monitoring, defibrillation, and lead signal measurement should be available during the implant procedure. This includes the PRM system with its related accessories and the software application. Before beginning the implantation procedure, become completely familiar with the operation of all the equipment and the information in the respective operator's and user's manuals. Verify the operational status of all equipment that may be used during the procedure. In case of accidental damage or contamination, the following should be available:

- Sterile duplicates of all implantable items
- Sterile wand
- Sterile PSA cables
- Torque and non-torque wrenches

During the implantation procedure, always have a standard transthoracic defibrillator with external pads or paddles available for use.

Step B: Interrogate and Check the Pulse Generator

To maintain sterility, test the pulse generator as described below before opening the sterile blister tray. The pulse generator should be at room temperature to ensure accurately measured parameters.

1. Interrogate the pulse generator using the PRM. Verify that the pulse generator's Device Mode is programmed to Storage. If otherwise, contact Boston Scientific using the information on the back cover.

To begin a ZIP telemetry session for VALITUDE devices, verify that the ZOOM Wireless Transmitter is connected to the PRM via the USB cable and that the green light on top of the transmitter is illuminated. To initiate communication with all devices, position the wand over the PG and use the PRM to Interrogate the pulse generator. Keep the telemetry wand in position until either a message appears, indicating that the telemetry wand may be removed from proximity of the pulse generator, or the ZIP telemetry light illuminates on the PRM system. Select the End Session button to quit a telemetry session and return to the startup screen. Radio frequency interference may temporarily disrupt ZIP telemetry communication. Increasing the distance from the source of interfering signals or repositioning the ZOOM Wireless Transmitter may improve ZIP telemetry performance. If ZIP telemetry performance is not satisfactory, the option of using wanded telemetry is available.

2. Review the pulse generator's current battery status. Counters should be at zero. If the pulse generator battery status is not at full capacity, do not implant the pulse generator. Contact Boston Scientific using the information on the back cover.
3. If a unipolar pacing configuration is required at implant, program the Lead Configuration to Unipolar before implant.

Step C: Implant the Lead System

The pulse generator requires a lead system for pacing and sensing.

Selection of lead configuration and specific surgical procedures is a matter of professional judgment. The following leads are available for use with the pulse generator depending on the device model.

- Unipolar or bipolar atrial lead
- Unipolar or bipolar right ventricular lead.
- Unipolar or bipolar left ventricular lead
- Quadripolar left ventricular lead

NOTE: *Using bipolar pacing leads will reduce the chance of myopotential sensing.*

NOTE: *If a coronary venous lead cannot be used and the physician's medical judgment indicates that a limited left thoracotomy is justified to place an epicardial lead, the use of either a sutureable, steroid-eluting pace/sense epicardial lead or sutureless epicardial pace/sense lead is recommended.*

CAUTION: The absence of a lead or plug in a lead port may affect device performance. If a lead is not used, be sure to properly insert a plug in the unused port, and then tighten the setscrew onto the plug.

CAUTION: If a dual-chamber device is programmed to AAI(R), ensure that a functional RV lead is present. In the absence of a functional RV lead, programming to AAI(R) may result in undersensing or oversensing.

CAUTION: Do not suture directly over the lead body, as this may cause structural damage. Use the suture sleeve to secure the lead proximal to the venous entry site to prevent lead movement.

Implant the leads via the surgical approach chosen.

When replacing a previously implanted pulse generator, it may be necessary to use an adapter to enable the new pulse generator to be connected to the existing leads. When using an adapter, follow the connection procedure described in the applicable adapter product data sheet. Always connect the adapter to the lead and repeat threshold and sensing measurements before connecting the adapter to the pulse generator.

NOTE: *Should lead performance changes occur which cannot be resolved with programming, the lead may need to be replaced if no adapter is available.*

Step D: Take Baseline Measurements

Once the leads are implanted, take baseline measurements. Evaluate the lead signals. If performing a pulse generator replacement procedure, existing leads should be reevaluated, (e.g., signal amplitudes, pacing thresholds, and impedance). The use of radiography may help ensure lead position and integrity. If testing results are unsatisfactory, lead system repositioning or replacement may be required.

- Connect the pace/sense lead(s) to a pacing system analyzer (PSA).

WARNING: For leads that require the use of a Connector Tool, use caution handling the lead terminal when the Connector Tool is not present on the lead. Do not directly contact the lead terminal with any surgical instruments or electrical connections such as PSA (alligator) clips, ECG connections, forceps, hemostats, and clamps. This could damage the lead terminal, possibly compromising the sealing integrity and result in loss of therapy or inappropriate therapy, such as a short within the header.

- Pace/sense lead measurements, measured approximately 10 minutes after initial placement (acute) or during a replacement procedure (chronic), are listed below. Values other than what are suggested in the table may be clinically acceptable if appropriate sensing can be documented with the currently programmed values. Consider reprogramming the sensitivity parameter if inappropriate sensing is observed. Note that the pulse generator measurements may not exactly correlate to the PSA measurements due to signal filtering.

Table 9. Lead measurements

	Pace/ sense lead (acute)	Pace/ sense lead (chronic)
R-Wave Amplitude[a b]	> 5 mV	> 5 mV
P-Wave Amplitude[a b]	> 1.5 mV	> 1.5 mV
R-Wave Duration[b c d]	< 100 ms	< 100 ms
Pacing Threshold (right ventricle)	< 1.5 V endocardial < 2.0 V epicardial	< 3.0 V endocardial < 3.5 V epicardial
Pacing Threshold (left ventricle)	< 2.5 V coronary venous < 2.0 V epicardial	< 3.5 V coronary venous < 3.5 V epicardial
Pacing Threshold (atrium)	< 1.5 V endocardial	< 3.0 V endocardial

Table 9. Lead measurements (continued)

	Pace/ sense lead (acute)	Pace/ sense lead (chronic)
Lead impedance (at 5.0 V and 0.5 ms atrium and right ventricle)	> programmed Low Impedance Limit (200–500 Ω) < 2000 Ω (or the programmed High Impedance Limit (2000–3000 Ω))	> programmed Low Impedance Limit (200–500 Ω) < 2000 Ω (or the programmed High Impedance Limit (2000–3000 Ω))
Lead impedance (at 5.0 V and 0.5 ms left ventricle)	> programmed Low Impedance Limit (200–500 Ω) < 2000 Ω (or the programmed High Impedance Limit (2000–3000 Ω))	> programmed Low Impedance Limit (200–500 Ω) < 2000 Ω (or the programmed High Impedance Limit (2000–3000 Ω))

a. Amplitudes less than 2 mV cause inaccurate rate counting in the chronic state, and result in inability to sense a tachyarrhythmia or the misinterpretation of a normal rhythm as abnormal.
b. Lower R-wave amplitudes and longer duration may be associated with placement in ischemic or scarred tissues. Since signal quality may deteriorate chronically, efforts should be made to meet the above criteria by repositioning the leads to obtain signals with the largest possible amplitude and shortest duration.
c. Durations longer than 135 ms (the pulse generator's refractory period) may result in inaccurate cardiac rate determination, inability to sense a tachyarrhythmia, or in the misinterpretation of a normal rhythm as abnormal.
d. This measurement is not inclusive of current of injury.

If the lead integrity is in question, standard lead troubleshooting tests should be used to assess the lead system integrity. Troubleshooting tests include, but are not limited to, the following:

- Electrogram analysis with pocket manipulation
- X-ray or fluoroscopic image review
- Invasive visual inspection

Step E: Form the Implantation Pocket

Using standard operating procedures to prepare an implantation pocket, choose the position of the pocket based on the implanted lead configuration and the patient's body habitus. Giving consideration to patient anatomy and pulse generator size and motion, gently coil any excess lead and place adjacent to the pulse generator. It is important to place the lead into the pocket in a manner that minimizes lead tension, twisting, sharp angles, and/or pressure. Pulse generators are typically implanted subcutaneously in order to minimize tissue trauma and facilitate explant. However, deeper implantation (e.g., subpectoral) may help avoid erosion or extrusion in some patients.

If an abdominal implant is suitable, it is recommended that implantation occur on the left abdominal side.

If it is necessary to tunnel the lead, consider the following:

WARNING: For leads that require the use of a Connector Tool, use caution handling the lead terminal when the Connector Tool is not present on the lead. Do not directly contact the lead terminal with any surgical instruments or electrical connections such as PSA (alligator) clips, ECG connections, forceps, hemostats, and clamps. This could damage the lead terminal, possibly compromising the sealing integrity and result in loss of therapy or inappropriate therapy, such as a short within the header.

WARNING: Do not contact any other portion of the IS4–LLLL lead terminal, other than the terminal pin, even when the lead cap is in place.

- If a compatible tunneler is not used, cap the lead terminal pins. A Penrose drain, large chest tube, or tunneling tool may be used to tunnel the leads.
- For IS4-LLLL leads, if a compatible tunneling tip and/or tunneler kit is not used, cap the lead terminal and grip only the terminal pin with a hemostat or equivalent.
- Gently tunnel the leads subcutaneously to the implantation pocket, if necessary.
- Reevaluate all lead signals to determine if any of the leads have been damaged during the tunneling procedure.

If the leads are not connected to a pulse generator at the time of lead implantation, they must be capped before closing the incision.

Step F: Connect the Leads to the Pulse Generator

To connect leads to the pulse generator, use only the tools provided in the pulse generator sterile tray or accessory kit. Failure to use the supplied torque wrench may result in damage to the setscrews, seal plugs, or connector threads. Do not implant the pulse generator if the seal plugs appear to be damaged. Retain the tools until all testing procedures are complete and the pulse generator is implanted.

Automatic Lead Detection

Until a right ventricular lead is detected, the lead impedance is measured in both unipolar and bipolar configurations. Upon insertion of the lead into the header the impedance measurement circuit will detect an impedance which indicates that the device is implanted (automatic lead detection). If the impedance is in range (200 – 2000 Ω, inclusive) the pulse generator will automatically switch to the nominal parameters and start sensing and delivering therapy. The pulse generator can also be programmed out of the Storage mode prior to implant using the PRM.

NOTE: *If the lead being used for automatic lead detection is unipolar, an in-range impedance will not be obtained until the pulse generator is in stable contact with the subcutaneous tissue of the pocket.*

NOTE: *Arrhythmia Logbook and stored EGM data will not be stored for the first two hours after the lead is detected except for PaceSafe and patient triggered episodes.*

If the device is programmed out of Storage, asynchronous pacing spikes could be observed on intracardiac EGMs before bipolar RV lead insertion or before placing the pulse generator into the subcutaneous pocket if a unipolar RV lead is present. These subthreshold spikes will not occur once a bipolar RV lead is detected in the header or when contact between the pacemaker case and subcutaneous tissue completes the normal pacing circuit for a unipolar RV lead. If the device exits Storage as the result of automatic lead detection, the pulse generator may take up to 2 seconds plus one LRL interval before pacing begins as a result of lead detection.

Leads should be connected to the pulse generator in the following sequence (for pulse generator header and setscrew location illustrations, refer to "Lead Connections" on page 48):

a. **Right ventricle.** Connect the RV lead first because it is required to establish RV-based timing cycles that yield appropriate sensing and pacing in all chambers, regardless of the programmed configuration.

   NOTE: *Tightening the RV setscrew is not required for automatic lead detection to occur but should be done to ensure full electrical contact.*

   - In models with an IS-1 RV lead port, insert and secure the terminal pin of an IS-1 RV pace/sense lead.

b. **Right atrium.**

   - In models with an IS-1 RA lead port, insert and secure the terminal pin of an IS-1 atrial pace/sense lead.

c. **Left ventricle.**

   - In models with an IS-1 LV lead port, insert and secure the terminal pin of an IS-1 coronary venous pace/sense lead.
   - In models with an LV-1 LV lead port, insert and secure the terminal pin of an LV-1 coronary venous pace/sense lead.
   - In models with a IS4-LLLL LV lead port, insert and secure the terminal pin of a IS4-LLLL lead.

Connect each lead to the pulse generator by following these steps (for additional information about the torque wrench, refer to "Bidirectional Torque Wrench" on page 66):

a. Check for the presence of any blood or other body fluids in the lead ports on the pulse generator header. If fluid inadvertently enters the ports, clean them thoroughly with sterile water.

b. If applicable, remove and discard the tip protection before using the torque wrench.

c. Gently insert the torque wrench blade into the setscrew by passing it through the preslit, center depression of the seal plug at a 90° angle (Figure 6 on page 60). This will open up the seal plug, relieving any potential pressure build-up from the lead port by providing a pathway to release trapped fluid or air.

NOTE: *Failure to properly insert the torque wrench in the preslit depression of the seal plug may result in damage to the plug and its sealing properties.*

CAUTION: Do not insert a lead into the pulse generator connector without taking the following precautions to ensure proper lead insertion:

- Insert the torque wrench into the preslit depression of the seal plug before inserting the lead into the port, to release any trapped fluid or air.
- Visually verify that the setscrew is sufficiently retracted to allow insertion. Use the torque wrench to loosen the setscrew if necessary.
- Fully insert each lead into its lead port and then tighten the setscrew onto the terminal pin.

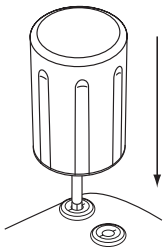

Figure 6. Inserting the torque wrench

d. With the torque wrench in place, fully insert the lead terminal into the lead port. The lead terminal pin should be clearly visible beyond the connector block when viewed through the side of the EasyView pulse generator header. Place pressure on the lead to maintain its position and ensure that it remains fully inserted in the lead port.

CAUTION: Insert the lead terminal straight into the lead port. Do not bend the lead near the lead-header interface. Improper insertion can cause insulation or connector damage.

NOTE: *If necessary, lubricate the lead connectors sparingly with sterile water to make insertion easier.*

NOTE: *For IS-1 leads, be certain that the terminal pin visibly extends beyond the connector block at least 1 mm.*

NOTE: *For IS4-LLLL leads, the terminal pin must be inserted beyond the setscrew block to enable a proper connection. Visualization of the terminal pin insertion indicator beyond the setscrew block may be used to confirm that the terminal pin is fully inserted into the lead port.*

e. Apply gentle downward pressure on the torque wrench until the blade is fully engaged within the setscrew cavity, taking care to avoid damage to the seal plug. Tighten the setscrew by slowly turning the torque wrench clockwise, until it ratchets once. The torque wrench is preset to apply the proper amount of force to the captive setscrew; additional rotation and force is unnecessary.

f. Remove the torque wrench.

g. Apply gentle traction to the lead to ensure a secure connection.

h. If the lead terminal is not secure, attempt to reseat the setscrew. Reinsert the torque wrench as described above, and loosen the setscrew by slowly turning the wrench counterclockwise, until the lead is loose. Then repeat the sequence above.

i. If a lead port is not used, insert a plug into the unused port and tighten the setscrew.

CAUTION: The absence of a lead or plug in a lead port may affect device performance. If a lead is not used, be sure to properly insert a plug in the unused port, and then tighten the setscrew onto the plug.

Step G: Evaluate Lead Signals

1. Insert the pulse generator into the implantation pocket.
2. Evaluate the pace/sense lead signals by viewing the real-time EGMs and markers. Lead measurements should reflect those above (Table 9 on page 55).

   Depending on the patient's intrinsic rhythm, it may be necessary to temporarily adjust pacing parameters to allow assessment of pacing and sensing. If proper pacing and/or sensing are not demonstrated, disconnect the lead from the pulse generator and visually inspect the connector and leads. If necessary, retest the lead.

CAUTION: Take care to ensure that artifacts from the ventricles are not present on the atrial channel, or atrial oversensing may result. If ventricular artifacts are present in the atrial channel, the atrial lead may need to be repositioned to minimize its interaction.

3. Evaluate all lead impedances.

CAUTION: Patients should be tested for diaphragmatic stimulation by pacing the LV lead through the pulse generator at 7.5 V and adjusting the lead configurations and lead position as necessary. PSA testing at higher outputs (e.g., 10.0 V) may also be considered to better characterize stimulation margins. The probability of diaphragmatic stimulation increases when a pacing system includes an LV lead because of this lead's proximity to the phrenic nerve.

For VALITUDE devices, the High Impedance Limit is nominally set to 2000 Ω, and is programmable between 2000 and 3000 Ω in 250 Ω increments. The Low Impedance Limit is nominally set to 200 Ω, and is programmable between 200 and 500 Ω in 50 Ω increments.

For INTUA and INVIVE devices, the High Impedance Limit is fixed at 2000 Ω. The Low Impedance Limit is nominally set to 200 Ω, and is programmable between 200 and 500 Ω in 50 Ω increments.

Consider the following factors when choosing a value for the impedance limits:

- For chronic leads, historical impedance measurements for the lead, as well as other electrical performance indicators such as stability over time
- For newly implanted leads, the starting measured impedance value

NOTE: *Depending on lead maturation effects, during follow-up testing the physician may choose to reprogram the impedance limits.*

- Pacing dependence of the patient
- Recommended impedance range for the lead(s) being used, if available

Step H: Program the Pulse Generator

1. Check the Programmer Clock and set and synchronize the pulse generator as necessary so that the proper time appears on printed reports and PRM strip chart recordings.
2. Program the pulse generator appropriately if a lead port(s) is not used.

Consider the following when programming the pulse generator:

- The minimum 2X voltage or 3X pulse width safety margin is recommended for each chamber based on the capture thresholds, which should provide an adequate safety margin and help preserve battery longevity.
- Programming a longer blanking period may increase the likelihood of undersensing R-waves.
- Programming a shorter blanking period may increase the likelihood for ventricular oversensing of an atrial paced event.
- When programming MTR, consider the patient's condition, age, general health, sinus node function, and that a high MTR may be inappropriate for patients who experience angina or other symptoms of myocardial ischemia at higher rates.

- When programming MSR, consider the patient's condition, age, general health and that adaptive-rate pacing at higher rates may be inappropriate for patients who experience angina or other symptoms of myocardial ischemia at these higher rates. An appropriate MSR should be selected based on an assessment of the highest pacing rate that the patient can tolerate well.
- For heart failure patients with second- and third-degree AV block, programming long Atrial Refractory periods in combination with certain AV Delay periods can cause 2:1 block to occur abruptly at the programmed MTR.
- Certain conditions may cause the temporary loss of CRT or AV synchrony due to Wenckebach-like behavior, and heart failure patients may become symptomatic if CRT is compromised. Consider patient condition when programming features such as MTR, AFR, Rate Smoothing, and features that switch to VVI or VVI-like behavior.
- Prior to programming RVAT on, consider performing a Commanded Ventricular Automatic Threshold Measurement to verify that the feature functions as expected.
- Using Fixed Sensing instead of AGC for patients who are pacemaker-dependent or have leads programmed to unipolar.
- In pacemaker-dependent patients, use care when considering setting Noise Response to Inhibit Pacing as pacing will not occur in the presence of noise.
- To resolve suspected impedance-based interactions with the Respiratory Sensor, program the sensor to Off.

Step I: Implant the Pulse Generator

1. Verify magnet function and wanded telemetry to ensure the pulse generator is within acceptable range to initiate interrogation.
2. Ensure that the pulse generator has good contact with surrounding tissue of the implantation pocket, and then suture it in place to minimize device migration (for suture hole location illustrations, refer to "Lead

Connections" on page 48). Gently coil excess lead and place adjacent to the pulse generator. Flush the pocket with saline solution, if necessary, to avoid a dry pocket.

WARNING: Do not kink, twist, or braid the lead with other leads as doing so could cause lead insulation abrasion damage or conductor damage.

3. Close the implantation pocket. Consideration should be given to place the leads in a manner to prevent contact with suture materials. It is recommended that absorbable sutures be used for closure of tissue layers.
4. If Electrocautery mode was used during the implant procedure, cancel it when done.
5. Confirm final programmed parameters.

   CAUTION: Following any Sensitivity parameter adjustment or any modification of the sensing lead, always verify appropriate sensing. Programming Sensitivity to the highest value (lowest sensitivity) may result in undersensing of cardiac activity. Likewise, programming to the lowest value (highest sensitivity) may result in oversensing of non-cardiac signals.
6. Use the PRM to print out parameter reports and save all patient data.

Step J: Complete and Return the Implantation Form

Within ten days of implantation, complete the Warranty Validation and Lead Registration form and return the original to Boston Scientific along with a copy of the patient data saved from the PRM. This information enables Boston Scientific to register each implanted pulse generator and set of leads, and provide clinical data on the performance of the implanted system. Keep a copy of the Warranty Validation and Lead Registration form and programmer printouts, and the original patient data for the patient’s file.

Complete the temporary patient identification card and give it to the patient. After receiving the validation form, Boston Scientific sends the patient a permanent identification card.

BIDIRECTIONAL TORQUE WRENCH

A torque wrench (model 6628) is included in the sterile tray with the pulse generator, and is designed for tightening and loosening #2-56 setscrews, captured setscrews, and setscrews on this and other Boston Scientific pulse generators and lead accessories that have setscrews that spin freely when fully retracted (these setscrews typically have white seal plugs).

This torque wrench is bidirectional, and is preset to apply adequate torque to the setscrew and will ratchet when the setscrew is secure. The ratchet release mechanism prevents overtightening that could result in device damage. To facilitate the loosening of tight extended setscrews, this wrench applies more torque in the counterclockwise direction than in the clockwise direction.

NOTE: *As an additional safeguard, the tip of the torque wrench is designed to break off if used to overtighten beyond preset torque levels. If this occurs, the broken tip must be extracted from the setscrew using forceps.*

This torque wrench may also be used for loosening setscrews on other Boston Scientific pulse generators and lead accessories that have setscrews that tighten against a stop when fully retracted (these setscrews typically have clear seal plugs). However, when retracting these setscrews, stop turning the torque wrench when the setscrew has come in contact with the stop. The additional counterclockwise torque of this wrench may cause these setscrews to become stuck if tightened against the stop.

Loosening Stuck Setscrews

Follow these steps to loosen stuck setscrews:

1. From a perpendicular position, tilt the torque wrench to the side 20º to 30º from the vertical center axis of the setscrew (Figure 7 on page 67).
2. Rotate the wrench clockwise (for retracted setscrew) or counterclockwise (for extended setscrew) around the axis three times, such that the handle of the wrench orbits the centerline of the screw (Figure 7 on page 67). The torque wrench handle should not turn or twist during this rotation.
3. As needed, you may attempt this up to four times with slightly more angle each time. If you cannot fully loosen the setscrew, use the #2 torque wrench from Wrench Kit Model 6501.

4. Once the setscrew has been freed, it may be extended or retracted as appropriate.
5. Discard the torque wrench upon completion of this procedure.

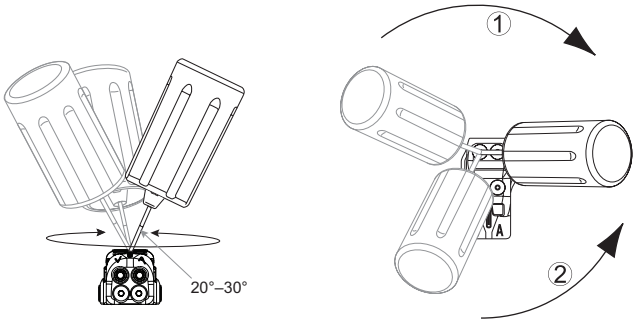

[1] Clockwise rotation to free setscrews stuck in the retracted position [2] Counterclockwise rotation to free setscrews stuck in the extended position

Figure 7. Rotating the torque wrench to loosen a stuck setscrew

FOLLOW UP TESTING

It is recommended that device functions be evaluated with periodic follow-up testing by trained personnel. Follow up guidance below will enable thorough review of device performance and associated patient health status throughout the life of the device.

Predischarge Follow Up

The following procedures are typically performed during the predischarge follow up test using PRM telemetry:

1. Interrogate the pulse generator and review the Summary screen.
2. Verify pacing thresholds, lead impedance, and amplitude of intrinsic signals.
3. Review counters and histograms.
4. When all testing is complete, perform a final interrogation and save all the patient data.
5. Print the Quick Notes and Patient Data reports to retain in your files for future reference.
6. Clear the counters and histograms so that the most recent data will be displayed at the next follow up session. Counters and histograms can be cleared by pressing Reset on the Histogram screen, Tachy Counters screen, or Brady Counters screen.

Routine Follow Up

During early and middle life of the device, monitor performance by routine follow up one month after the predischarge check and at least annually thereafter. Office visits may be supplemented by remote monitoring where available. As always, the physician should evaluate the patient's current health status, device status and parameter values, and local medical guidelines to determine the most appropriate follow up schedule.

When the device reaches One Year Remaining status and/or a Magnet Rate of 90 ppm is observed, follow up at least every three months to facilitate timely detection of replacement indicators.

NOTE: *Because the duration of the device replacement timer is three months (starting when Explant status is reached), three month follow up frequency is particularly important after the One Year Remaining status is reached.*

Consider performing the following procedures during a routine follow-up test:

1. Interrogate the pulse generator and review the Summary screen.
2. Verify pacing thresholds, lead impedance, and amplitude of intrinsic signals.
3. Print the Quick Notes and Patient Data reports to retain in your files for future reference.
4. Review the Arrhythmia Logbook screen and for episodes of interest, print episode details and stored electrogram information.
5. Clear the counters and histograms so that the most recent episode data will be displayed at the next follow-up session.
6. Verify that important programmed parameter values (e.g., Lower Rate Limit, AV Delay, LV Offset, Rate Adaptive Pacing, output Amplitude, Pulse Width, Sensitivity) are optimal for current patient status.

NOTE: *Echo-Doppler studies may be used to non-invasively evaluate AV Delay and other programming options post-implant.*

EXPLANTATION

NOTE: *Return all explanted pulse generators and leads to Boston Scientific. Examination of explanted pulse generators and leads can provide information for continued improvement in system reliability and warranty considerations.*

WARNING: Do not reuse, reprocess, or resterilize. Reuse, reprocessing, or resterilization may compromise the structural integrity of the device and/or lead to device failure which, in turn, may result in patient injury, illness, or death. Reuse, reprocessing, or resterilization may also create a risk of contamination of the device and/or cause patient infection or cross-infection, including, but not limited to, the transmission of infectious disease(s) from one patient to another. Contamination of the device may lead to injury, illness, or death of the patient.

Contact Boston Scientific when any of the following occur:

- When a product is removed from service.
- In the event of patient death (regardless of cause), along with an autopsy report, if performed.
- For other observation or complications reasons.

NOTE: *Disposal of explanted pulse generators and/or leads is subject to applicable laws and regulations. For a Returned Product Kit, contact Boston Scientific using the information on the back cover.*

NOTE: *Discoloration of the pulse generator may have occurred due to a normal process of anodization, and has no effect on the pulse generator function.*

CAUTION: Be sure that the pulse generator is removed before cremation. Cremation and incineration temperatures might cause the pulse generator to explode.

CAUTION: Before explanting, cleaning, or shipping the device, complete the following actions to prevent overwriting of important therapy history data:

- Program the pulse generator Brady Mode to Off
- Program Ventricular Tachy EGM Storage to Off

Clean and disinfect the device using standard biohazard handling techniques.

Consider the following items when explanting and returning the pulse generator and/or lead:

- Interrogate the pulse generator and print a comprehensive report.

- Deactivate the pulse generator before explantation.
- Disconnect the leads from the pulse generator.
- If leads are explanted, attempt to remove them intact, and return them regardless of condition. Do not remove leads with hemostats or any other clamping tool that may damage the leads. Resort to tools only if manual manipulation cannot free the lead.
- Wash, but do not submerge, the pulse generator and leads to remove body fluids and debris using a disinfectant solution. Do not allow fluids to enter the pulse generator's lead ports.
- Use a Boston Scientific Returned Product Kit to properly package the pulse generator and/or lead, and send it to Boston Scientific.

For additional reference information, go to
www.bostonscientific.com/ifu.

Boston Scientific
4100 Hamline Avenue North
St. Paul, MN 55112–5798 USA

www.bostonscientific.com

1.800.CARDIAC (227.3422)
+1.651.582.4000

© 2014 Boston Scientific Corporation or its affiliates.
All rights reserved.

359252-001 EN US 2014-05