REV	DATE	DESCRIPTION	DRAWN BY
B	18MAR99	Release to Production	EMH
C	14MAY99	PER ECR-9341	RWJ
D	23JUN99	PER ECR-9412	TAF

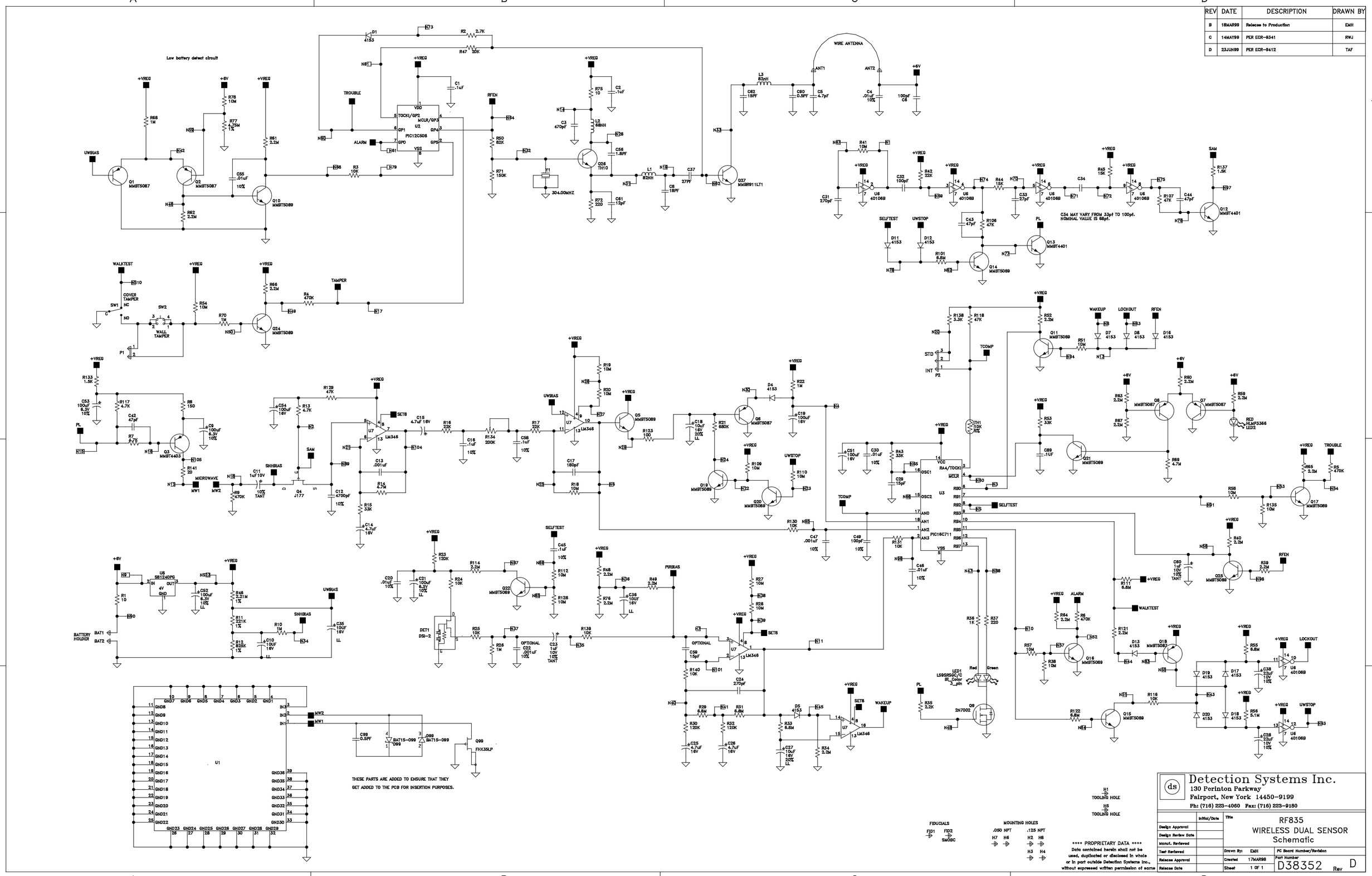

**** PROPRIETARY DATA ****
Data contained herein shall not be used, duplicated or disclosed in whole or in part outside Detection Systems Inc., without expressed written permission of same

Detection Systems Inc.
130 Perinton Parkway
Fairport, New York 14450-9199
Ph: (716) 223-4060 Fax: (716) 223-9180

	Initial/Date
Design Approval	
Design Review Date	
Manuf. Reviewed	
Test Reviewed	
Release Approval	
Release Date	

Title: RF835 WIRELESS DUAL SENSOR Schematic

Drawn By: EMH
Created: 17MAR98
Sheet: 1 OF 1
PC Board Number/Revision
Part Number: D38352 Rev D