ALINCO

VHF FM Mobile Transceiver

DR-135T
DR-135E

Instruction Manual

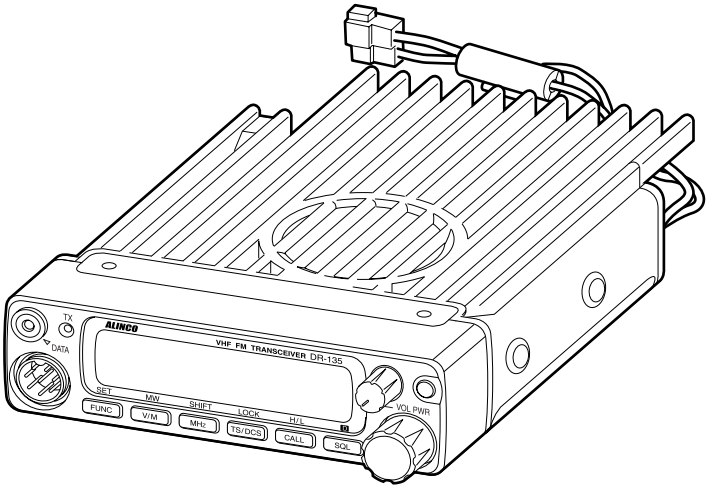

Thank you for purchasing your new Alinco transceiver.
This instruction manual contains important safety and operating instructions. Please read this manual carefully before using the product and keep it for the future reference.

ALINCO INCORPORATED

NOTICE

This equipment has been tested and found to comply with the limits for a Class B digital device, pursuant to part 15 of the FCC Rules.
These limits are designed to provide reasonable protection against harmful interference in a residential installation. This equipment generates, uses, and can radiate radio frequency energy and, if not installed and used in accordance with the instruction manual, may cause harmful interference to radio communications. However, there is no guarantee that interference will not occur in a particular installation. If this equipment does cause harmful interference to radio or television reception, which can be determined by turning the equipment off and on, the user is encouraged to try to correct the interference by one or more of the following measures:

- *Reorient or relocate the receiving antenna.*
- *Increase the separation between the equipment and receiver.*
- *Connect the equipment into an outlet on a circuit different from that to which the receiver is connected.*
- *Consult the dealer or an experienced radio/TV technician for help.*

Tested to Comply
With FCC Standards
FOR HOME OR OFFICE USE

Information in this document is subject to change without notice or obligation. All brand names and trademarks are the property of their respective owners. Alinco cannot be liable for pictorial or typographical inaccuracies. Some parts, options and/or accessories are unavailable in certain areas. Changes or modifications not expressly approved by the party responsible for compliance could void the user's authority to operate the equipment.

Copyright @ 2000 All rights reserved. No part of this document may be reproduced, copied, translated or transcribed in any form or by any means without the prior written permission of Alinco. Inc., Osaka, Japan. English Edition Printed in Japan.

Contents

Before operating the transceiver 3
Introduction 3

1. New and Innovative Features 4

2. Standard Accessories 5

3. Initial Installation 6
- For a base station set up 6
- For a mobile station set up 7
- External power supply control & Power lamp functions 8
- Power supply voltage display function 8

4. Part Names and Functions 9
- Front Panel 9
- Rear Panel 10
- Display 11
- Microphone 12

5. Basic Operations 13
- Turning the unit on and off 13
- Audio Volume level setting 13
- Squelch level setting 13
- VFO mode 14
  - [Change frequency by the channel step] 14
  - [Change frequency by 1 MHz step] 14
- Changing the channel step 15
- REPEATER (DUPLEX) Operation 15
- CTCSS / DCS setting 16
- Memory Mode 17
  - [Memory programming] 17
  - [Programmable data in the memory channel] 18
- CALL mode 19
- To receive signals 19
- To transmit 20

6. Parameter Setting Mode 21
- Channel Step setting 22
- Scan Type 22
- Beep Sound 22
- Time-Out-Timer 23
- TOT Penalty 23
- APO - Auto Power OFF 24
- Tone-Burst-Frequency 24
- Busy-Channel-Lock-Out 24
- Theft Alarm 24
- Alphanumeric Tag 25
- Dimmer 25

7. Advanced Operations 26
SCANNING FUNCTION 26
[VFO Scan] 26
[Memory scan] 26
• Program scan 27
• Tone Scan 27
• DCS scan 28
KEY-LOCK FUNCTION 28
TONE BURST 28
AUTO-DIALER 29
THEFT ALARM 30
CABLE CLONE 32

8. PACKET OPERATION 33
[To operate packet using EJ-41U] 33
[To operate packet using an external TNC] 35
[To operate APRS®] 36
[SET UP] 37
[APRS Operation] 37

9. Maintenance / Reference 38
Reset 38
Trouble Shooting 39

10. Optional accessories 40

11. Specifications 41

Appendix 42
TNC Commands List 42

Before operating the transceiver

Attention

- Do not remove the case or touch the interior components.
  Tampering can cause equipment trouble.
- Do not use or keep the transceiver where it is exposed to direct sunlight, dusty places, or near sources of heat.
- Keep the transceiver away from TV's or other equipment when it interferes with reception.
- When transmitting for a long periods of time at high power, the transceiver might overheat.
- Turn the power off immediately if the transceiver emits smoke or strange odors. Ensure the transceiver is safe, then bring it to the nearest Alinco service center.

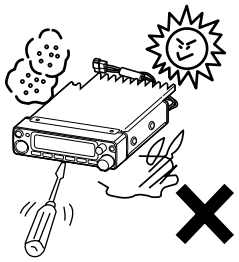

Introduction

Thank you very much for purchasing this excellent Alinco transceiver. Our products are ranked among the finest in the world. This radio has been manufactured with state of the art technology and it has been tested carefully at our factory. It is designed to operate to your satisfaction for many years under normal use.

PLEASE READ THIS MANUAL COMPLETELY TO LEARN ALL THE FUNCTIONS THE PRODUCT OFFERS. WE MADE EVERY ATTEMPT TO WRITE THIS MANUAL TO BE AS COMPREHENSIVE AND EASY TO UNDERSTAND AS POSSIBLE. IT IS IMPORTANT TO NOTE THAT SOME OF THE OPERATIONS MAY BE EXPLAINED IN RELATION TO INFORMATION IN PREVIOUS CHAPTERS. BY READING JUST ONE PART OF THE MANUAL, YOU RISK NOT UNDERSTANDING THE COMPLETE EXPLANATION OF THE FUNCTION.

1. New and Innovative Features

Your new radio features some of the most advanced functions and reliable engineering available anywhere. The ALINCO design philosophy is focused on developing innovative usable features, including the following:

- Three different styles of display are available on a large LCD panel including frequency, channel number or 7 digit alphanumeric label. The dimmer (bright/dim) makes it easier to read the display at night.
- Simple, clean layout of keys and knobs ensure convenient operation.
- High-quality materials are used throughout the product and a huge heat sink around the chassis ensures stable and durable operation.
- Conventional or narrow FM mode can be selected.
- AM Air-band reception capability (DR-135T only).
- 100 fully programmable memory channels with alphanumeric memory channel labels.
- A DATA port is located on the front panel for easy access to external accessory connections. A DSUB9 port is available on the rear to connect a PC for 1200/9600bps packet operation.
- CTCSS, DCS and 4 different Tone-Bursts are standard for selective calling and repeater access worldwide.
- The Theft Alarm feature gives an extra measure of security for mobile installation.
- The transceiver has a cable clone capability.
- The optional EJ-41U board is available for data communications such as APRS™ or packet, without an external TNC.

2. Standard Accessories

Carefully unpack to make sure the following items are found in the package in addition to this manual:

• DR-135

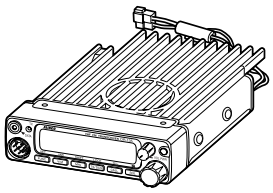

• Microphone EMS-53 or EMS-56 (with DTMF keypad)

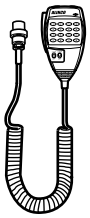

• DC power cable with fuse holder (UA0038)

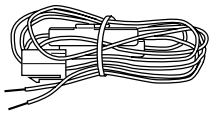

• Mobile mounting bracket. (FM0078Z)

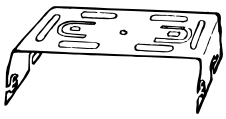

• Alarm cable A (with wire) (UX1259)

• Alarm cable B (extension use) (UX1260)

• Hardware kit for bracket

Black screws (M4*8mm) 4pcs. (AE0012)

Tapping screws (M5*20mm) 4pcs. (AJ0003)

Screws (M5*20mm) 4pcs. (AA0013)

Washer (AZ0010)
S-washer (AZ0009)

Hexagonal nut (M5) 4pcs. (AN0002)

Small (spanner) wrench. (FM0079)

Spare fuses (a pair) 2pcs. (EF0005)

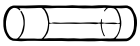

• Theft Alarm stickers 2pcs. (PR0454)
• Instruction manual (PS0349)
• Warranty certificate (DR-135T only) (PH0009A)
• EJ-41U manual & disc (with TNC version only)

The standard accessories may vary slightly depending on the version you have purchased. Please contact your local authorized Alinco dealer should you have any questions. ALINCO and authorized dealers are not responsible for any typographical errors there may be in this manual. Standard accessories may change without notice.

Warranty Policy:
Please refer to any enclosed warranty information or contact your authorized Alinco dealer / distributor for the warranty policy.

3. Initial Installation

Connect the microphone to the front panel of the transceiver.

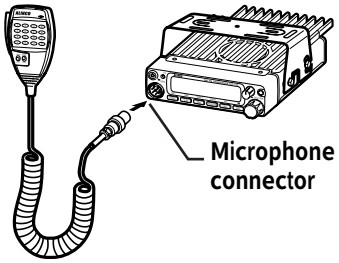

Connect antenna port to a 50 ohm antenna that covers the two-meter band, using good quality 50 ohm coaxial cable.

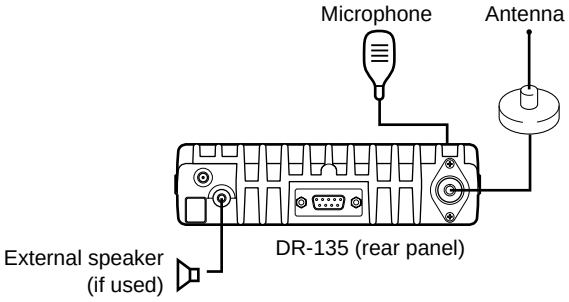

For a base station set up

The Transceiver requires a 12-13.8VDC negative grounded power source.
Use a regulated power supply capable of providing continuous current of 12A or more.
Power supplies that do not meet those specifications may cause malfunction and/or damage to the radio and will void the warranty. Alinco offers excellent communication-grade power supplies as optional accessories. Please contact your local authorized Alinco dealer.

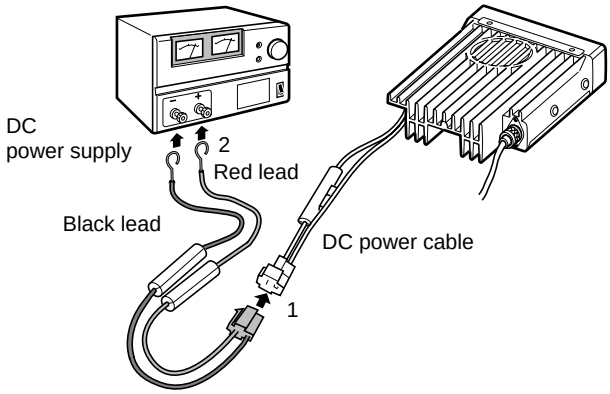

For a mobile station set up

Location

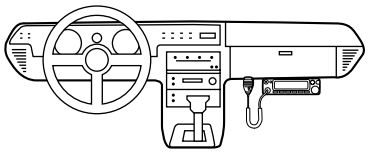

The transceiver may be installed in any position in your car, where the controls and microphone are easily accessible and it does not interfere with the safe operation of the vehicle or the performance of the set. If your vehicle is equipped with air bags, be certain your radio will not interfere with their deployment. If you are uncertain about where to mount the unit, contact your vehicle's manufacturer.

Installing a Mobile Antenna

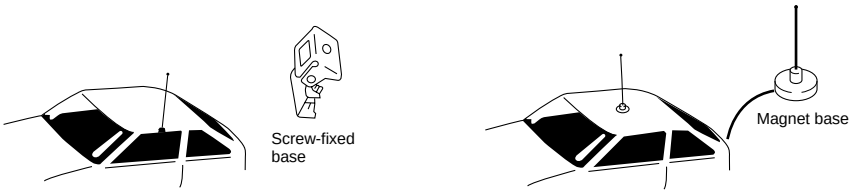

Use a 50 ohm coaxial cable to connect the antenna. Mobile antennas require an appropriate mounting base for proper installation and operation. For more information, see the documentation for your antenna.

CAUTION:	After installing your antenna, ensure that you have the best possible SWR reading. High RF environments can cause severe damage to your unit. Ensure that you are not in a high RF environment when operating the transceiver.

Installing the Transceiver

See the figure on the below.

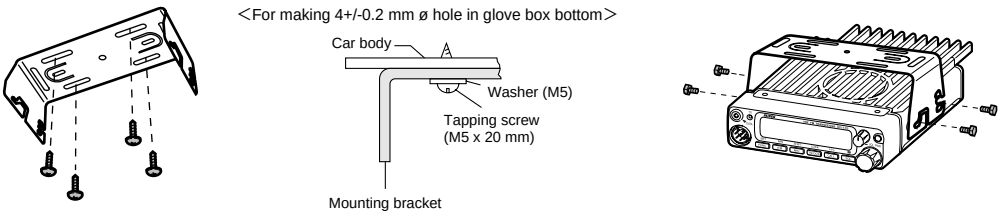

External power supply control & Power lamp functions

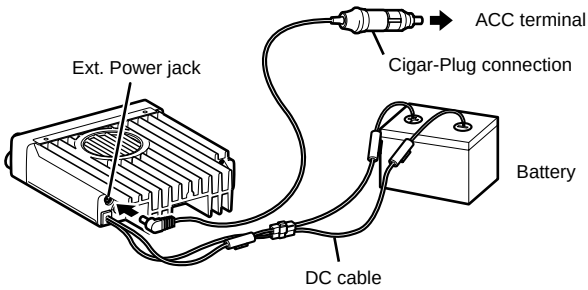

Be sure the vehicle has a negative-ground, 12VDC electric system before installation. Connect the provided DC cable directly to the battery as shown below to minimize any possible ignition noise. Be sure the vehicle has a large capacity battery as the use of the transceiver may overload the electric system of the vehicle.
If the ignition-key on/off feature is desired (optional feature), use the optional EDC-37 (For direct connection to the circuit on the vehicle) or EDC-43 (for a Cigar-Plug connection. EDC-36 is also compatible) cable. Connect one of the cables between the ACC terminal or a Cigar-Plug that operates with the vehicle ignition or ACC switch on the vehicle and EXT POWER jack on the rear side of the unit. (Note: In many cars, the cigar-lighter plug is always powered. If this is the case, you cannot use it for the ignition key on/off function.) If this option is selected, the unit can be turned on/off either manually or automatically in accordance with the ignition key position:

1. When the ignition key is turned to ACC or ON (Start) position with the radio turned off, the power switch illuminates. The illumination will be turned off when the ignition key is turned to the off position. To turn on the unit, press the power switch manually while it is illuminated (while ignition key is at ACC or ON position).

2. When the ignition key is turned to ACC or ON position with the radio's power switch on, the unit turns on automatically and the power switch will be lit. Turn the ignition key to OFF position or manually turn the power switch off to shut down the radio.

The power consumption when using the additional cable is 5mA.
For the operation without this option, use the power switch to turn the unit on/off.

Power supply voltage display function

After connecting the transceiver to the power supply, the supply voltage can be confirmed by pressing the SQL key together with the FUNC key. The supply voltage to the transceiver is then seen on the display.
The transceiver will return to its normal operation when the power is switched OFF.

The display immediately changes as the voltage supply changes.
It also displays voltage during transmission.

IMPORTANT: The range of the displayed voltage is only from 7V - 16VDC. Because the displayed value is estimated, please use a voltmeter when a more precise reading is desired.

4. Part Names and Functions

Front Panel

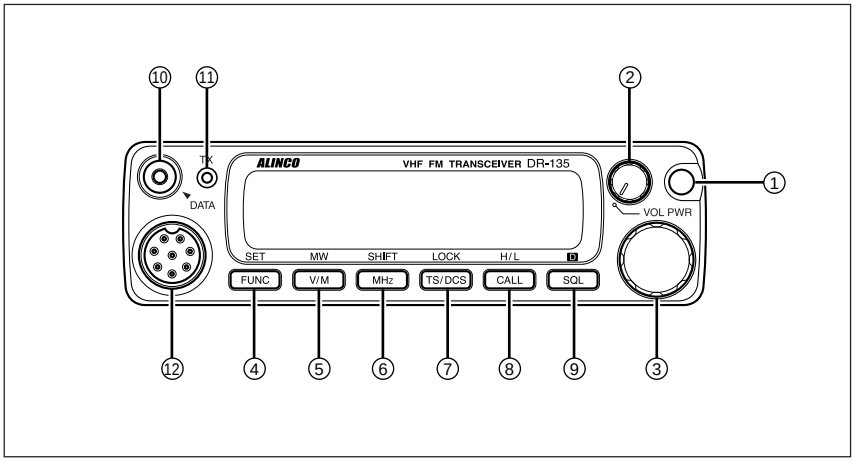

•Primary Functions

No.	Key	Function
1	PWR	Power turns ON / OFF whenever switch is pressed.
2	Volume knob	Adjusts the volume level.
3	Dial	Changes the frequency, memory channel and scan direction.
4	FUNC/SET	Sets the function mode to access additional settings.
5	V/M/MW	Switches between VFO mode and memory mode.
6	MHZ/SHIFT	Changes the frequency in 1 MHz steps.
7	TS/DCS/LOCK	Sets the tone squelch and DCS setting.
8	CALL/H/L	Switches to CALL mode.
9	SQL/D	Sets the squelch level
10	DATA Terminal	Used in clone and theft alarm functions.
11	TX Light indicator	Lights during transmission.
12	Mic. Connector	Connection port for supplied microphone.

•Functions which can be activated while F appears, after pressing the FUCN Key.

No.	Key	Function
4	FUNC/SET	Confirms selection of other functions and exits the function mode.
5	V/M/MW	Write in to memory channel.
6	MHZ/SHIFT	Sets the shift setting and the offset frequency.
7	TSDCS/LOCK	Sets the key lock function.
8	CALL/H/L	Switches between HI, MID, and LOW power transmission.
9	SQL/D	Accesses the 9600 bps packet and communication mode.

• Functions that can be activated while pressing the FUNC Key

No.	Key	Function
1	PWR	Reset to factory default settings.
5	V/M/MW	Erase the memory.
6	MHZ/SHIFT	Switches to wide / narrow mode reception.
7	TSDCS/LOCK	Sets the auto dialer.
8	CALL/H/L	Accesses the clone function mode.
9	SQL/D	Accesses the power supply voltage indication mode.

• Functions that require continuous pressing to be activated.

No.	Key	Function
4	FUNC/SET	When pressed for 2 seconds, accesses the set mode.
9	SQL/D	When pressed, within 1 second the monitor function is on.

Rear Panel

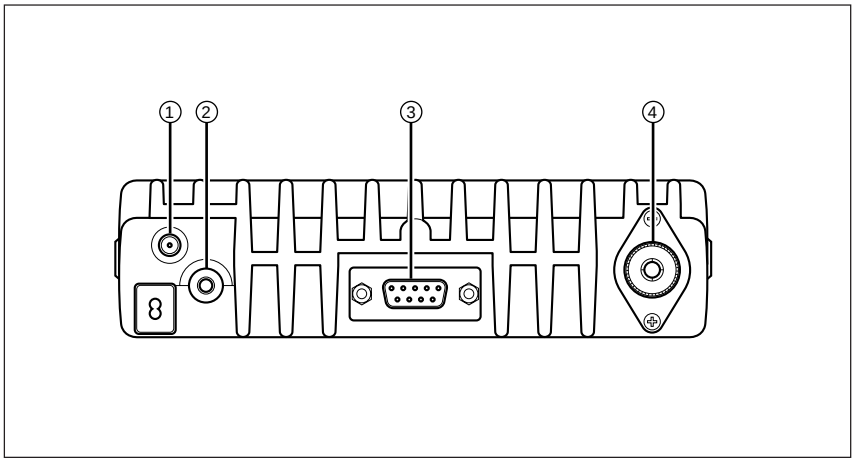

No.	Key	Function
1	Ext. Power jack	Terminal for connecting optional EDC-37 for use with ignition key on/off function.
2	External Speaker Terminal	Terminal for optional external speaker
3	DSUB-9 Connector	Terminal where external TNC may be connected for packet use. With optional EJ-41U, connects internal TNC to the computer.
4	Antenna Connector	Connection for 50 ohm coaxial cable and antenna.

Display

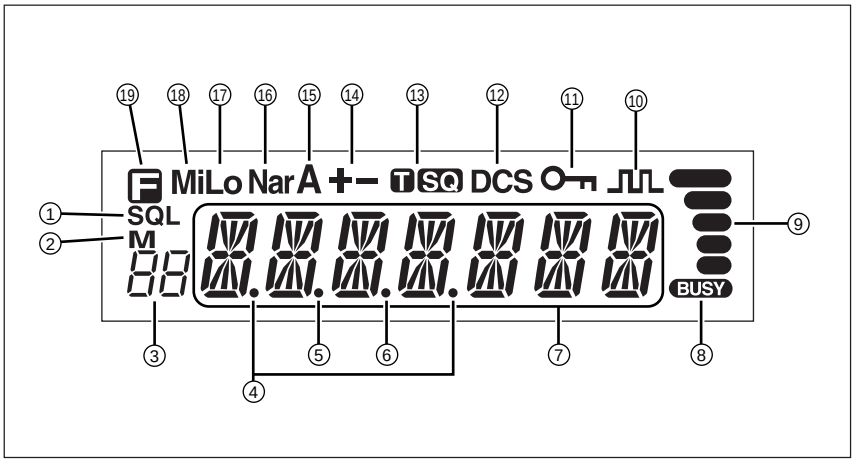

No.	Key	Function
1	SQL	Appears when setting the squelch level.
2	M	Appears when in memory mode.
3	88	Indicates the memory channel number in memory mode.
4	.Decimal point	Appears when setting the theft alarm function.
5	.Decimal point	Appears when setting the skip level.
6	.Decimal point	Indicates the decimal point of frequency and the scanning function.
7	888888	Indicates the frequency or memory name.
8	BUSY	Appears when a signal is being received.
9	S-meter	Indicates the signal strength level of transmission / reception.
10	⎍	Appears when in 9600 bps packet mode.
11	key lock	Appears when setting the key lock.
12	DCS	Appears when setting the DCS.
13	TSQ	Appears when setting the tone squelch.
14	+-	Appears when setting the shift.
15	A	Appears during AM reception (DR-135T only)
16	Nar	Appears when in narrow band reception mode.
17	Lo	Appears when transmission power is set to LOW.
18	Mi	Appears when transmission power is set to MID.
19	F	Appears when FUNC Key is pressed.

Microphone

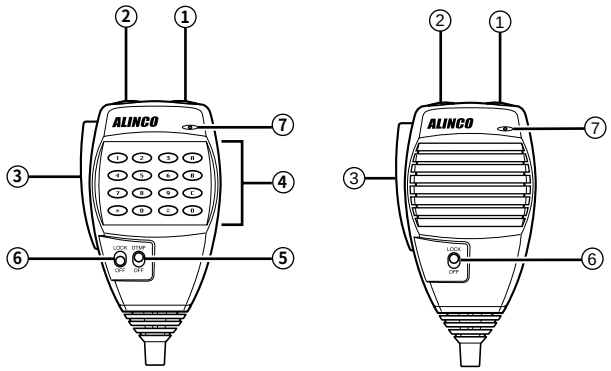

No.	Key	Function
1	UP	Increase the frequency, memory channel number, or setting value.
2	DOWN	Decrease the frequency, memory channel number, or setting value.
3	PTT	Press the PTT(Push-To-Talk)key to transmit.
4	DTMF	DTMF tone keys
5	DTMF ON/OFF	Switches DTMF mic key illumination ON/OFF
6	Lock Switch	Locks out the UP and DOWN keys.
7	MIC	Speak here during transmission.

Mic. Connector Diagram (While looking in the front view of the connector)

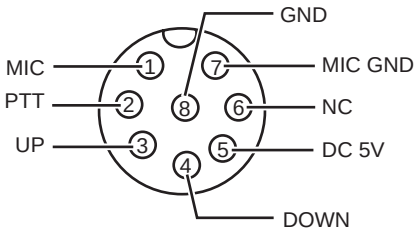

5. Basic Operations

Turning the unit on and off

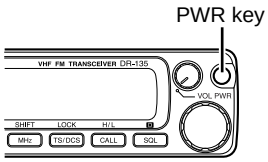

Press the power switch or turn the ignition key to ACC or ON position according to the option selected during installation. Press the power switch again or turn the ignition key to OFF position to turn off.

Audio Volume level setting

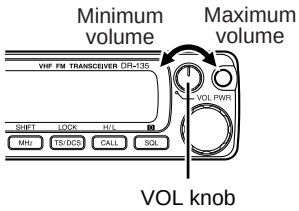

Rotate the VOL knob clockwise to increase the audio level, counterclockwise to decrease. Set it at the desired level.

Squelch level setting

A squelch eliminates white-noise (the background noise when a signal is not received).
Higher level settings will keep the squelch "closed" more tightly for quieter monitoring, but weak signals will not be heard. Lower settings allow weaker signals to "open" the squelch but noise may also cause it to open.

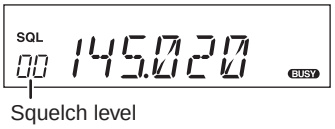

1. Press SQL key. SQL icon appears on the display and the squelch level will be shown at the position where the memory number is displayed. 21 levels, between 0 and 20, are available. "0" is the lowest setting.

2. By rotating the main dial or by using the UP/DOWN keys on the microphone, adjust the squelch to the desired level. To return to normal use, press PTT or any key on the front panel; or if there are no operations within 5 seconds, the unit will store the setting and will return to its original status.

The new squelch level will be stored in the CPU until another adjustment is done.

VFO mode

VFO tuning is set as a default mode at the factory. VFO (variable frequency oscillator) allows you to change the frequency in accordance with the selected channel step as you rotate the main dial or by using the UP/DOWN keys on the microphone. VFO mode is also used to program the data to be stored in the memory channels or to change the parameter settings of the transceiver.

VFO mode

1. Identify the current mode by checking the display. If “M” or “C” icon is NOT displayed on it, the unit is already in the VFO mode.

2. Otherwise press “V/M” keys until those icons are gone.

[Change frequency by the channel step]

Rotate the main dial clockwise to increase the frequency, counterclockwise to decrease. The UP/DOWN keys on the microphone act in the same way.

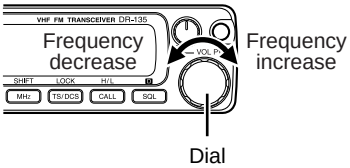

[Change frequency by 1 MHz step]

This will enable a quick change of frequency in 1 MHz steps:

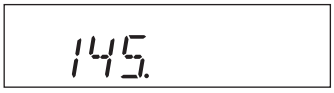

1. Press MHz key. The digits after 100 kHz will disappear from the display.

2. Follow the same sequence as above to change the value.

Changing the channel step

1. Be sure the unit is in VFO mode. Refer to page 21 to enter into the SET mode.

Display for channel step

2. Select the channel step parameter setting using the tuning knob. The current channel step will be displayed as below.

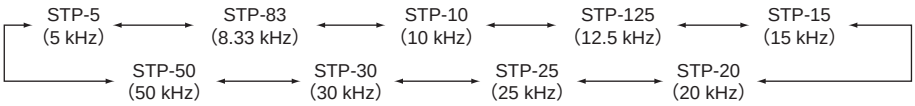

3. Press PTT or any one of the keys except SQL on the front panel to enter the desired step into the transceiver's memory. The display will then return to the original status.

Please note that settings below 10 kHz may be automatically corrected according to the selected step.

REPEATER (DUPLEX) Operation

Shift Direction and Offset frequency setting

Conventional repeaters are operated in the DUPLEX mode. It receives an incoming signal (UP-LINK) on one frequency and re-transmits on another (DOWN-LINK). The difference between these two frequencies is called the offset frequency. If the UP-LINK frequency is higher than the DOWN-LINK frequency, the direction is positive, and if it is lower, the shift direction is negative. The offset is variable between 0 to 99.995 MHz on this unit.

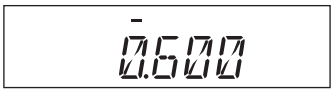

at-600 kH0z

Press the F key. While the F icon stays on the display, press MHz key. The display shows the current status of shift direction and offset frequency. The default value is 0.60 MHz (600 kHz) in the negative direction. Press MHz key until the desired offset direction is set. If SIMPLEX mode (without changing transmit and receive frequency) is desired, select the position where both - and + icons disappeared.

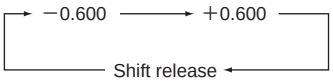

1. Rotate the dial or use UP/DOWN keys on the microphone to change the shift frequency.
   It changes in accordance with the channel step setting.

2. In this mode, if the F key is pressed again, the offset frequency can be changed in 1 MHz steps for faster setting.

3. Press PTT or any key except F or MHz on the front panel to return to the original status.

CTCSS / DCS setting

Many repeaters require a CTCSS tone or a DCS code encode setting as a “key” to access the system, so-called “selective-calling”. Sometimes, CTCSS or DCS decode features are used on the output of a repeater so they can be used as a squelch. In this mode, regardless of the main squelch status, the audio can be heard ONLY when the matching tone/code signal is received. The combination of CTCSS squelch and DCS function is not available; only one or the other may be used for a given memory channel.

1. Press TS/DCS key. The current setting will be displayed with T/SQ/DCS icons and relative frequency/code. Press the same key to select T/SQ/DCS setting.

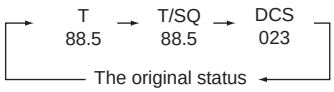

2. The numbers (such as 88.5) represent the CTCSS frequency in Hz. When it is displayed with the T icon only, the unit transmits the sub-audible tone while the PTT is pressed (encode) and the repeater access is enabled (assuming the repeater is using 88.5).

3. Press the same key again so that SQ icon shows up on the display. This is the CTCSS decode frequency. This enables CTCSS squelch (or Tone Squelch, TSQ).

4. Press it again so that 3-digit number with DCS icon will be displayed. This is DCS code, and it enables DCS encoding and decoding.

For 2 - 4, rotate the main dial or press UP/DOWN keys to change tone or code. Press any key except TS/DCS, UP/DOWN key to enter the setting and return to original status. T/SQ/DCS icon will remain on the display to show the current status. To exit, simply use TS/DCS key and press it until the relative status icon T/TQ/DCS disappears.

The CTCSS encoding and decoding frequencies may be set differently. The encode setting frequency automatically relates to the decode setting, but decode setting does not affect encode. The standard set of 39 different CTCSS tones are available as shown on the chart below. DCS encode/decode cannot be separated and are selectable from 104 codes as shown below.

67.0	69.3	71.9	74.4	77.0	79.7
82.5	85.4	88.5	91.5	94.8	97.4
100.0	103.5	107.2	110.9	114.8	118.8
123.0	127.3	131.8	136.5	141.3	146.2
151.4	156.7	162.2	167.9	173.8	179.9
186.2	192.8	203.5	210.7	218.1	225.7
233.6	241.8	250.3			

CTCSS Tone Frequency(Hz)

023	025	026	031	032	036	043	047	051	053	054
065	071	072	073	074	114	115	116	122	125	131
132	134	143	145	152	155	156	162	165	172	174
205	212	223	225	226	243	244	245	246	251	252
255	261	263	265	266	271	274	306	311	315	325
331	332	343	346	351	356	364	365	371	411	412
413	423	431	432	445	446	452	454	455	462	464
465	466	503	506	516	523	526	532	546	565	606
612	624	627	631	632	654	662	664	703	712	723
731	732	734	743	754						

DCS Codes

NOTE: Depending on the deviation level of the incoming DCS coded-signal, your radio may not open the DCS squelch. If this occurs, return to DCS setting mode and press the CALL key. A decimal point appears on the 10 MHz order; then set the desired code. This setting can also be stored in a memory channel.

Memory Mode

The memory mode on this transceiver provides up to 100 channels (0-99), 1 call (quick recall ch) and a pair of program-scan “edge memory” channels for quick, easy access to the preprogrammed frequencies with different parameter settings.

1. Press V/M key. M icon appears on the display to indicate that the unit is in the memory mode. Repeat to switch the mode between VFO and memory.

Memory mode

2. In memory mode, rotate the main dial or press UP/DOWN keys to change the memory channel number.

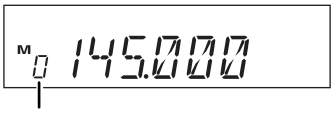

Memory channel

3. To change the number by units of 10, press FUNC and rotate the main dial or press UP/DOWN keys while F icon is on the display.

[Memory programming]

1. Return to VFO mode by pressing V/M key. Referring to the list below for the programmable parameters, program in the VFO mode to the desired frequency and settings to be stored later in the memory.

2. When all the settings are complete, press FUNC key. The F, and M icons appear and a memory channel number will be indicated on the display.

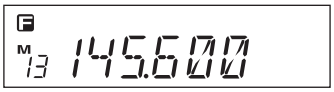

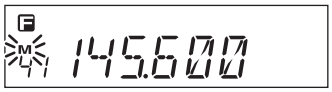

during the unregistered channel

3. Rotate the main dial or press the UP/DOWN keys to select the desired memory channel number into which the current VFO settings will be copied. An empty channel is shown with flashing M icon. It may be a good practice to “allocate” memory channels in order, such as 0-9 for local repeaters, 10-19 local simplex, 20-49 repeaters within the area, 50-79 for repeater reserve, 80-98 simplex reserve. It makes references easier for the operation and future modifications of the memory channels.

4. While F icon is on the display, press MW key. The VFO settings are copied to the memory channel and a beep will sound. The memory channel can be over-written if a previously programmed channel is selected (the memory channels shown with stable M icon).

5. To program the CALL channel (quick recall) select the channel shown with CH-C on the display. Save Ch99 to store the setting used for the Alarm operation, which will be explained later. Use PL and PH for Program scan setting, which will be explained in the advanced operations chapter.

6. To delete a programmed channel, select it in memory mode, press FUNC key then press the MW key while F icon is on. The memory is deleted and a beep sounds. The M icon starts flashing showing that this channel is now empty.

7. To undo delete, repeat 6. However, the Undo function becomes impossible once the channel or the mode is changed.

[Programmable data in the memory channel]

Some features will be explained later, so please read this instruction manual thoroughly prior to programming memories.
Memory channels including 0 - 99 and CALL can store following:

- Frequency
- Shift frequency
- Shift direction
- CTCSS tone both encode and decode
- Tone Squelch setting
- DCS code both encode and decode
- DCS squelch setting
- Scan skip channel
- Busy Channel Lock Out setting
- Priority monitoring frequency (PC programming required)
- Normal/Narrow FM width
- AM air-band receive (available on DR-135T only)

NOTE: Only the frequency can be stored in PH and PL channels to determine the edges of the program scan range.

CALL mode

This is a memory mode that allows the DR-135 to quickly recall the assigned memory channel by simply pressing the CALL key, regardless of the current status of the unit. The default CALL frequency is 145.00 MHz.

1. Press CALL key. The C icon appears on the display and the transceiver enters the CALL mode. In this mode, the main dial or the UP/DOWN keys cannot change the frequency or memory channels.

2. Press CALL key again or press V/M key to exit CALL mode.

3. No scan functions are available in CALL mode.

To store a desired setting in the CALL channel, follow the memory mode programming instructions and assign your selected settings to memory channel C. The call channel can be modified but cannot be eliminated or hidden.

To receive signals

- Be sure to have the unit connected to the appropriate antenna, powered on, set the audio volume and squelch level properly.
- Select the desired receiving frequency or browse frequencies to listen to ongoing communications. The S-meter shows relative signal strength between BUSY and FULL when the transceiver detects an incoming signal.
- If the S-meter indicates an incoming signal but nothing is heard from a speaker, check audio level, squelch level, and CTCSS/DCS decoding status, which are explained elsewhere in this manual.
- A Monitor function is available to receive weaker signals. Press and hold SQL key for more than 1 second. Regardless of the level setting of the squelch, it will be opened and the BUSY icon turns on the display. Press any key on the front panel to exit.

To transmit

1. Select the desired frequency. Be sure that you are authorized to operate on the selected frequency. Check the system and monitor the frequency to make sure that you are not going to disturb any ongoing communications.

2. Select the output power. Press FUNC key and then press CALL key while F icon is on the display. As the CALL key is pressed, the output power changes among 3 levels. The Lo icon stands for LOW power setting, Mi for MEDIUM power. When the transceiver is set at HIGH power, no icon will appear. The output power level can not be changed during transmission.

3. Default setting is High power. Press the PTT key on the microphone to transmit, release it to receive. During transmission, the relative power output is shown on the RF meter as:
LOW power = 2 segments
MID power = 3 segments
HIGH power = 5 segments.

LOW power

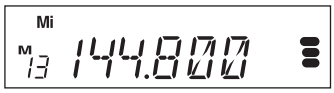

MID power

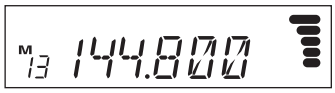

HIGH power

4. If operating from a vehicle, do not transmit for extended periods without running the engine, to avoid battery drainage. Check the battery voltage often. The lights, windshield wipers, stereo system, air-conditioner, defogger and other accessories drain the battery's power considerably. When those accessories are turned on, reduce the output power or turn off one or more accessories to avoid the battery becoming over-loaded. Watch the road when driving. Check local regulations that may pertain to the use of a transceiver when driving.

6. Parameter Setting Mode

IMPORTANT: Please read following pages thoroughly prior to the change of any parameters. THE PARAMETERS CANNOT BE SET WITHOUT ENTERING THE SET MODE.

By entering the Parameter Setting mode, some of the radio's operating parameters can be changed to suit your application. The following is the Selectable Parameters' Menu.

Note: The Alphanumeric Channel Tag setting will not appear in the menu until memories have been programmed first!

To use the Parameter Setting mode

1. Press FUNC key for more than 2 seconds to enter the Parameter Setting mode.
   Use SQL key or UP/DOWN keys to select menu.

Default setting

2. Rotate the main dial to select the desired setting.

3. Press SQL or UP/DOWN keys again to enter the selected setting into the radio's memory. The transceiver is now ready for additional Parameter adjustments.

4. Press any key OTHER than SQL/UP/DOWN to exit the Parameter mode. The only exception is Channel Tag setting which accepts only PTT, FUNC, MHz and TS/DCS keys to exit.

Details of the features in Menu

Please refer to "Parameter Setting Mode" for setting operations. The operation procedures of some of the features are explained later in detail.

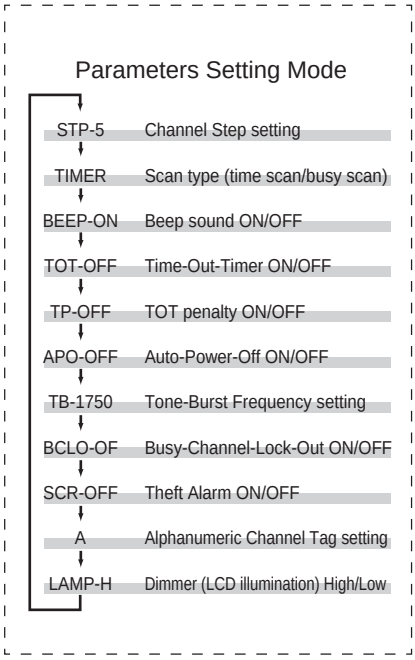

Channel Step setting:

This is to select the channel step to be used in VFO mode. Refer to the chart below for the relation of the actual step frequency and how it is displayed.

STP- 5

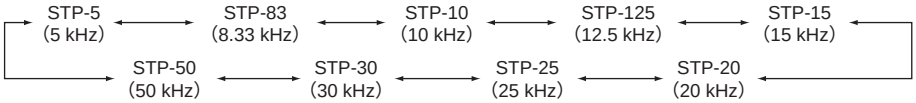

Scan Type

This is to select the scan resume condition. TIMER setting allows the radio to resume scanning after 5 seconds, regardless of the signal receiving status. BUSY setting resumes scanning when the received signal is gone. The scan mode is explained later.

TIMER

Beep Sound

BEEP-ON setting enables a beep that sounds after certain keys are touched and/or setting is done. BEEP-OF shows that the beep function is off.

BEEP-ON

Time-Out-Timer

TOT feature is popular in repeater systems. It prohibits the users from transmitting on the repeater after a certain period of time has elapsed. By setting this function and activating it according to the repeaters' requirement, the radio alerts the user by a beep 5 seconds prior to time-out. When the time is expired, transmitting stops and the transceiver automatically returns to receiving mode. This avoids the repeater going into its TOT mode. Until the PTT is released once and pressed again, the DR-135 will not transmit.

1. In this Menu the default display shows TOT-OFF.

TOT-OFF

2. Rotate the main dial to select time-out time. The display should change as shown below. The number followed by TOT is the time-out time in seconds.

TOT- 60

during the setting time of 60 seconds

3. It is selectable up to 450 seconds (7.5 minutes).

TOT Penalty

When the transmission is shut down in the TOT mode, this function prohibits another transmission for a selected time period.

1. During the TOT penalty period, the beep sounds when the PTT is pressed but the radio does not transmit.

2. If the PTT is continuously pressed over both TOT and the TOT penalty period, this function will be automatically cancelled.

3. Default setting is TP-OFF. Rotate the main dial to select the penalty time, up to 15 seconds.

TP-OFF

TP- 5

during the setting time of 5 seconds

APO-Auto Power OFF

This feature will automatically shut off the transceiver. It is useful for mobile operation to avoid draining the car battery. If there is no activity or use of the radio, it will turn off automatically after 30 minutes followed by a beep sound.

1. Default is APO-OFF.

APO-OFF

2. Rotate dial to select APO-ON to activate the function.

APO-ON

during the ON setting

Tone-Burst Frequency

This is to access Tone-Burst repeaters which require a certain pitch of audible tone to activate "sleeping" repeaters. Usually, a repeater system does not require the tone once the repeater is activated.

1. The default is TB-1750, which is 1750 Hz tone.
2. It is selectable from 1750, 2100, 1000, 1450 Hz.

TB- 1750

during the 1750 Hz frequency

See ADVANCED OPERATION chapter for operation.

Busy-Channel-Lock-Out

This function prohibits transmission as long as there is a signal on the receiving frequency.
The default is BCLO-OF, which is the off position. By activating this function, the radio transmits only when:

1. No signal is received (BUSY icon is gone) on the receiving frequency.
2. Tone-squelch is opened by the corresponding CTCSS tone of the receiving signal.
3. As above, with DCS code.

Otherwise a beep sounds but the unit does not transmit even when the PTT is pressed.

BCLO-ON

during the ON setting

Theft Alarm

Default is SCR-OFF. Select ON or DLY to activate the function. When the SCR-ON is selected, 100 MHz and 100 kHz order decimal points will appear on the display.
The operation of this DR-135 feature is explained later.

145.400

lights up lights up

Alphanumeric Tag

The memory channels stored in the memory-mode can be displayed with an alphanumeric tag instead of default frequency display. Program the memory channel first.
There are 67 characters available including A-Z, 0-9.

1. Enter to the set mode while the unit is in memory mode.

2. Select alphanumeric tag setting by rotating the main dial or UP/DOWN keys. The display shows [A] flashing.

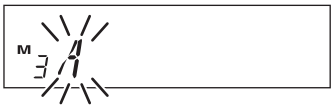

3. Rotate the main dial to select a character. Press V/M key. The character stops flashing and is entered.

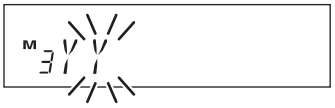

4. The same flashing character appears next to it, ready for the next character to be entered. Repeat the same sequence up to seven characters.

5. To delete all characters during programming press [CALL] key.

6. To exit after setting is done, press one of the following keys: PTT, FUNC, TS, DCS.

After programming, the alphanumeric tag will be displayed on the designated channels, instead of the frequency, when in memory mode. The memory channel number and other status icons will also be displayed. If you wish to see the programmed frequency, press FUNC and it will be displayed for 5 seconds. To return to the alphanumeric display, wait 5 seconds or press any key. Pressing any key followed by FUNC returns to normal operation, regardless of the display status.

IMPORTANT: This function cannot be enabled without programming the memories.

Dimmer

The display illumination can be dimmed.

1. [LAMP-H] is displayed as default.

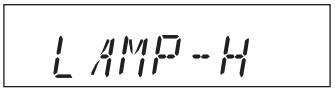

2. Rotate the dial to choose the brighter (H) or darker (L) position.

7. Advanced Operations

Your transceiver offers different features for advanced operations.

SCANNING FUNCTION

Use this function to automatically search for signals. 6 different scan types are available in the unit. In parameter setting mode, choose Timer mode or Busy mode to determine the desired resuming condition. If the CTCSS(TSQ) squelch or DCS squelch is set, the audio can be heard only when the tone/code matches the incoming signal. Otherwise, scan stops but no audio will be heard. The direction of scan, upward or downward, can be changed during the scan by rotating the main dial or pressing UP or DOWN keys in the desired direction.

[VFO Scan]

Scans all VFO channels in regard to the preset tuning step.

1. Enter VFO mode.
2. Press UP (to go upward) or Down (to go downward) key for more than 1 second but less than 2 seconds. (To SCAN press for more than 2 seconds and will become auto repeats.)
3. The scan starts. It stops at the frequency where the incoming signal is detected, and resumes the scan according to the resume setting.

4. Press any key other than UP/DOWN keys to exit.

[Memory Scan]

Scans all memory channels unless Memory skip feature is selected for a given memory.

1. Enter Memory mode.
2. Sequence is the same as in VFO scan. Use UP/DOWN keys for command.

NOTE: Memory Skip feature

This feature allows determined memory channels to be skipped during the scan. The skip channel can be set even after the memory is programmed.

1. In Memory mode, select the channel to be skipped. Press FUNC key. While F icon is visible on the display, press V/M key. Repeat the sequence to delete the setting.
2. When the memory channel is set to Skip, the 10 MHz order decimal point will be displayed.
3. CALL, PL, PH, and ch.99 are always skipped during Memory scan.

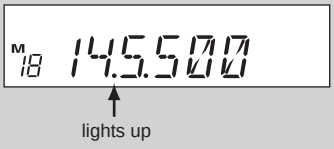

•Program Scan

This is a type of VFO scan, but by setting the frequency range of the VFO into PH and PL channels, it only scans between those frequencies. With setting the PH and PL properly, up to 3 Program scan ranges will be available.

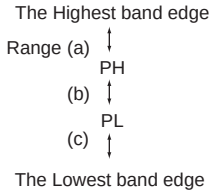

1. Enter the VFO mode and set the PL and PH frequency into the designated memory channels. Refer to Memory setting for the proper sequence.

2. Return to VFO mode by pressing V/M key. Set the VFO to the frequency within the range to be program-scanned.

3. Press MHz key for more than 1 second to start scanning. During this scan mode, “P” flashes after memory channel display.

4. Use main dial or UP/DOWN keys to change the direction. Press any key other than the UP/DOWN keys to exit.

•Tone Scan

This function automatically searches for the CTCSS tone an incoming signal might carry. This feature is useful to search the encoding tone of a repeater, or to communicate with a station operating in TSQ (CTCSS squelch) mode.

1. Press TS/DCS key to enter CTCSS decode setting mode.

2. Press UP/DOWN key for more than 1 second but less than 2 seconds to start scanning. It scans 39 tones in order.

3. The decimal point on the tone frequency will flash, and it stops when the matching tone is detected.

4. The scan won’t resume until the operation is repeated.

5. Press any key other than UP/DOWN keys to exit.

•DCS scan

Same as previous, but for DCS code search.

1. Press TS/DCS key to enter DCS setting mode.
2. Press UP/DOWN key for more than 1 second but less than 2 seconds to start. It searches the 104 DCS codes in order.
3. The 1 MHz order decimal point will flash.

4. The scan stops when the matching code is detected.
5. The scan won't resume until the operation is repeated.
6. Press any key other than UP/DOWN keys to exit.

KEY-LOCK FUNCTION

This will lock the keys to avoid unintentional changes.

1. Press FUNC key and press TS/DCS key while F icon is on the display.
2. The [O--] icon appears.

3. With this function activated, only the following commands can be accessed:
   - PTT
   - FUNC+TS/DCS to cancel this function
   - Monitor function (to release squelch for weak signal reception)
   - Squelch setting
   - UP/DOWN keys

TONE BURST

Press the DOWN key while PTT is pressed. The tone burst will be transmitted as long as both keys are pressed together. Usually just a few seconds of burst is enough to activate the repeater.

AUTO-DIALER

This will automatically transmit pre-programmed DTMF tones. DTMF (Dual-Tone-Multi-Frequency) are the same tones used in the telephone system, and they are often used to remote control electronic devices or AUTOPATCH phone systems available on some repeaters.

To program tones in the Auto-dialer memory:

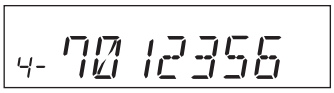

(Ex. Dialer set mode)

1. Press FUNC key and TS/DCS key at the same time to enter the setting mode. Default display is 0 on the right end of the display. Memory channel icon displays which of the ten auto-dial memories (0~9) is in use.

2. Use UP/DOWN keys to select the desired channel.

3. Rotate the main dial to select the first digit, then press TSQ key to enter. The Cursor moves toward right. Repeat sequence to complete.

4. Use [-] for pause. The display scrolls when the 7th digit is entered. The numbers 0 to 9, pause, * and # can be stored up to a total of 16 digits.

5. To check the entered digits, press FUNC then rotate the main dial while F icon is on.

6. To delete, press CALL key. Press PTT, V/M, MHz or SQL keys to exit and return to original status.

THEFT ALARM

This alert uses a beep sound when the unit is about to be removed in an improper manner. This function is useful when the unit is installed in a vehicle.

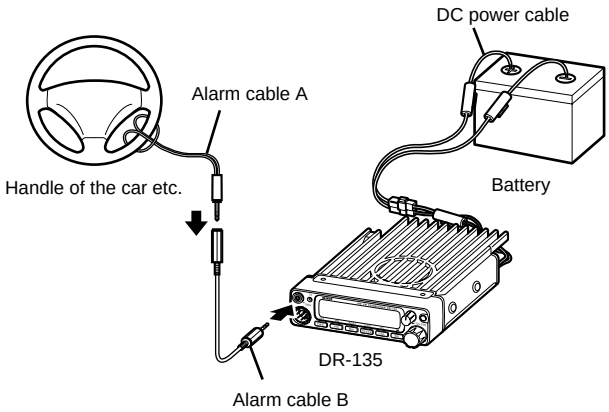

[Operation 1]

Setting: Connect the DC cable direct to the battery.

1. Connect the provided alarm cable to the DATA jack on the front panel as shown. Secure the other end of the cable to an object that stays fixed in the vehicle.

2. Enter the Parameter Setting mode by pressing FUNC key for more than 2 seconds. Use SQL or UP/DOWN keys to select menu and rotate the dial to set SCR-ON. Press any key other than SQL/UP/DOWN key to enter the setting and exit.

3. Turn off the unit with main power switch. The TX LED will be lit.

To turn off the alarm function, turn on the unit, enter the Parameter setting mode again, and select SCR-OF. When alarm is activated, the decimal points on 100 MHz and 10 kHz order will flash on display.

NOTE: 1. The alarm functions only when the unit is turned off.
2. When the alarm is activated (SCR-ON or DLY), the Ignition key function does not work.

Function:

1. When the alarm cable is removed from the DATA jack or cut without proper sequence, the alarm sounds for 10 minutes. During the alarm, the unit goes to receive on memory channel 99, according to its pre-programmed setting (TSQ/DCS accepted).

2. When a signal is received on ch.99 the alarm stops.

3. Turning on the unit with SQL key pressed also cancels the alarm.

4. Turn the unit off again with the alarm cable connected properly. It returns to the alarm mode.

[Operation 2]

Choose this operation when a delay period is desired.

1. Enter the Parameter setting mode as described previously and select SCR-DLY. Follow the previous instruction to set.

2. Turn off the unit. Display will disappear but the LCD illumination stays on. After 20 seconds TX LED lights up, illumination dims, and alarm functions. The system won't work during the 20 second "DELAY" period.

3. The alarm sounds under the same condition as described previously. There is a 20 second delay until the alarm sounds. During the 20 second period, only the display illumination is lit. Turn ON the unit during "DELAY" period to cancel the alarm function.

   Please set the parameter at SCR-OF during normal operation.

NOTE: The alarm feature on DR-135TA version functions in a slightly different manner.
1. When the alarm starts, the unit alternates between transmit and receive on ch.99 every 5 seconds for 1 minute, then sounds the audio alarm only for 10 minutes.
2. Setting and operation of the function are the same as other versions.

This feature allows you to monitor and to control the alarm from a remote place by using ch.99 on memory mode.

CABLE CLONE

This feature will copy the programmed data and parameters in the master unit to slave units. It copies the parameters and memory program settings.

Connection

Make a cable using 3.5 mm stereo-mini plugs as shown below. Make a master unit by setting and programming it as desired. Turn off both units. Connect the cable between the DATA jacks on both master and slave.
Turn both radios on after the connection is done.

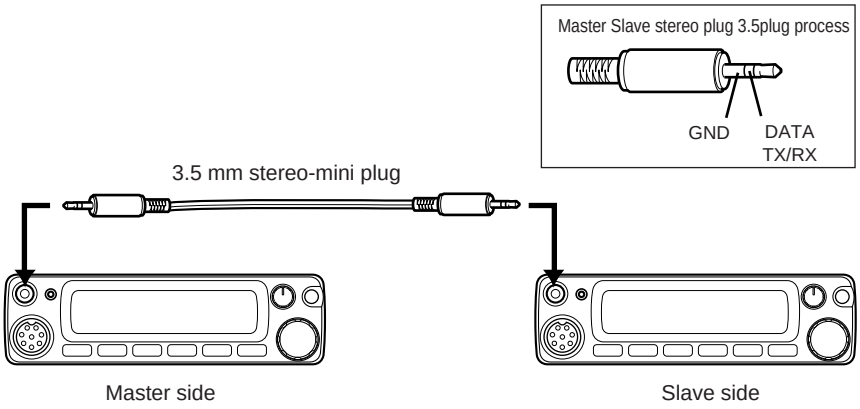

[Setting: Slave side]

1. Go to receive mode (VFO or Memory). Avoid using 9600bps data reception.
2. When it receives the clone data, LD*** shows up on the display.
3. When the transmission is successfully finished, the display will show [PASS].
4. Turn off the power. Disconnect the cable and repeat the sequence to clone the next slave unit.

[Setting: Master side]

1. Press CALL key with FUNC key pressed. CLON.d will be displayed and the radio enters the clone mode.
2. Press PTT. SD*** will be displayed and it starts sending the data into the slave unit.
3. [PASS] will appear on the display when the data is successfully transmitted.
4. The master radio may stay turned on for the next clone. Turn off the unit to exit from the clone mode.

If the data is not successfully transmitted, turn off both units, make sure the cable connection is correct and repeat the entire operation from the beginning.

8. PACKET OPERATION

Packet mode is high-speed data communication using a personal computer. The use of a Digital repeater network (Digi-peaters), including satellites, offers communications with distant stations. In order to operate in the packet mode, it is essential that the station is equipped with a personal computer with appropriate packet software, 9 pin RS-232C cable, optional EJ-41U TNC unit or external TNC (terminal node controller). For the operation of EJ-41U unit or external TNC, please refer to its respective instruction manual.

[To operate packet using EJ-41U]

Configure the radio to a known packet operation frequency.
Install the EJ-41U unit in the unit following the instructions below. Use an RS-232C cable and connect it to the DSUB-9 connector on the back of transceiver and the PC.

Note: The DR-135TP is already set for the EJ-41U.

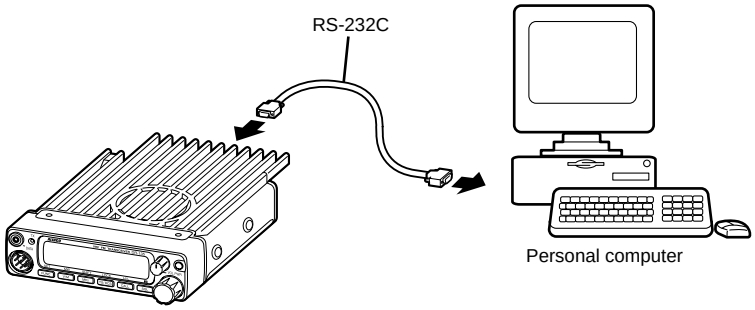

1. Remove the cover. Locate W1 cable on the back of DSUB-9 connector in the unit. Disconnect it and re-connect it to CN1 on the EJ-41U unit.

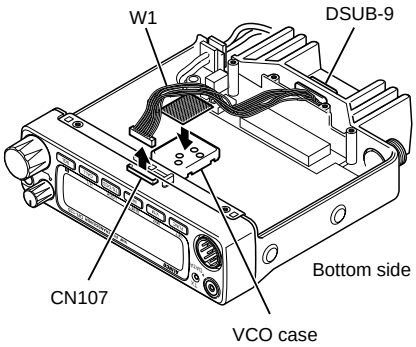

2. Locate W2 cable on the EJ-41U. Connect it to CN107 on the DR-135 circuit board.

3. Place the cushion sticker on the VCO shield case (a metal housing on the circuit board).

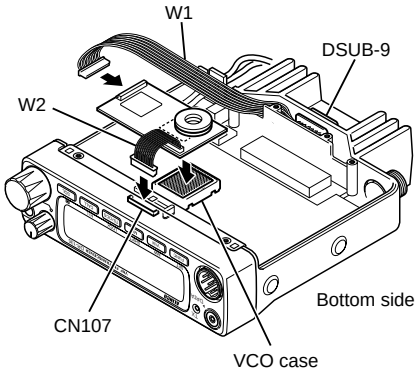

Packet Mode Setting

1. Press FUNC key. While F icon is on, press SQL key. [⎍⎍] appears on the LCD display and the transceiver enters packet mode. Repeat the same sequence to exit from packet mode.

2. Use the computer keyboard to send designated commands from your PC to enter to the packet network and start operation. Refer to the chart for TNC commands. Use the commands to select between 1200/9600 bps data speed.

Reference:

The configuration of EJ-41U is as follows. Please use PC commands to program.

- Data Speed (Transfer Rate) 9600bps
- Data Length 8 bit
- Parity Bit none
- Stop bit 1 bit
- Flow Control Xon/Xoff

Once the EJ-41U is programmed, the settings are stored in memory even if the unit is removed from the transceiver. Some EJ-41U functions may be limited as compared to those found in an external TNC.

[To operate packet using an external TNC]

Use the DSUB-9 connector to connect the radio and the PC. The pin allocation for the DSUB-9 on the back of the unit is as follows:

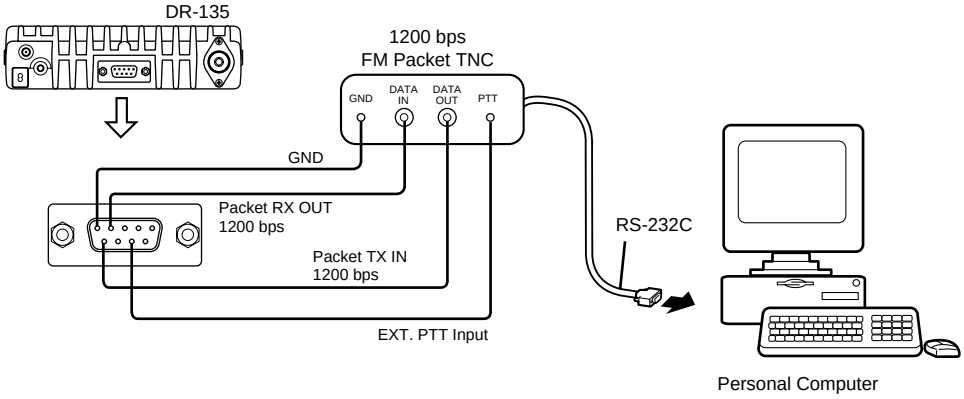

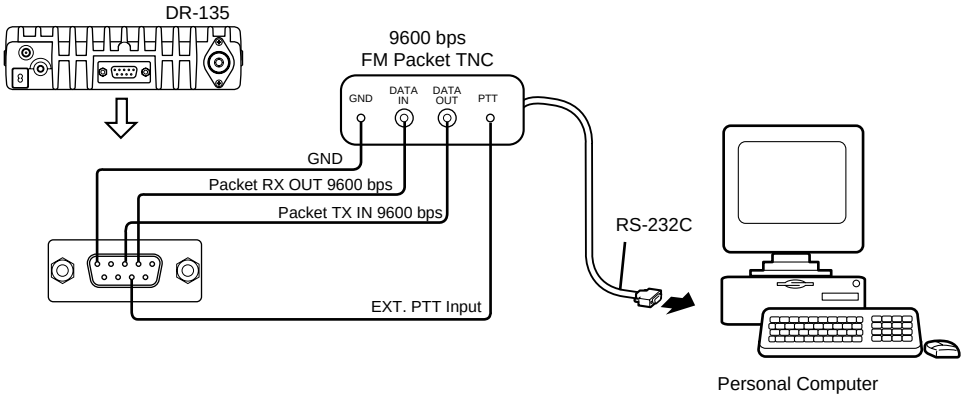

1. SQC squelch signal output. Carrier in: closed. Open collector output.
2. Packet reception DATA output (9600bps) output level 500mVrms/10Kohm
3. Packet transmission DATA input (9600bps) input level 300mV/600ohm Max input level 600mV.
4. Packet reception DATA output (1200bps) output level 100mV/600ohm
5. Ground
6. No Connection
7. PTT signal input : Low (GND) : TX, Open: RX
8. 5.0Vdc output: Max current less than 50mA
9. Packet transmission DATA input (1200bps): input level 100mV/600ohm

•1200bps

Connect Pins 4, 5, 7, 9, and 1 and 8 also depending on the requirement. It enables a conventional 1200bps packet mode.

•9600bps

Connect Pins 2, 3, 5, 7, and 1 and 8 also depending on the requirement.

Press FUNC key, while F icon is on, press SQL. [⎍] appears on LCD and enables 9600bps packet mode.

NOTE:
- Never connect a PC directly to the DSUB-9 connector if EJ-41U is not installed. It may cause the unit to malfunction.
- The local system, transmission and reception environment may easily cause troubles in 9600bps packet mode. A connection error may frequently occur unless the communication is established at very high signal strength.
- When the DATA input level is far off from the specification (1200bps=100mVrms/600ohm, 9600bps=400mV/600ohm), it causes poor S/N ratio and distortion, as such the data will not be exchanged properly.
- When the radio is in the data mode (packet/APRS®), selective calling tones such as DCS and CTCSS won't be transmitted.

[To operate APRS®]

APRS® is a trademark of Mr. Bob Bruninga, WB4APR. Using the designated APRS frequency in your area, and a system composed of the transceiver, EJ-41U (or TNC) a computer and/or a GPS receiver, you may monitor and exchange various geolocating information on the PC and on the internet. Details are available from Internet sites.

The radio is capable of being connected to an EJ-41U (or TNC), PC and GPS receiver. To enjoy APRS operation, a GPS receiver, computer and APRS software are required in addition to the packet (data) operation system previously mentioned. Purchase a NMEA (National Marine Electronics Association) compatible GPS receiver with a data output port.

- Specifications required for the GPS receiver: NMEA-0183, 4800bps/without parity bit/data length 8 bit/ stop bit 1bit

[SET UP]

Please refer to the previous chapter for the set up and installation of the EJ-41U unit, TNC and PC. See below for the connection of a GPS receiver. It requires 3.5mm stereo plug to connect to the DATA Terminal on the radio's front panel. See the chart for plug connections. Program the EJ-41U by using commands from the PC in the same way as in the packet mode.
The PC can be removed from the transceiver once EJ-41U is configured. EJ41U will hold the settings in memory. Repeat configuration only when it is necessary.

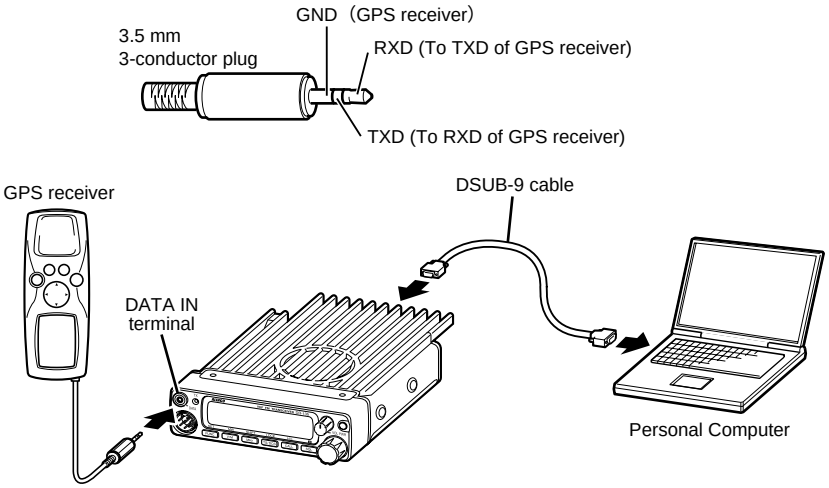

[APRS Operation]

Boot up the PC and open the APRS software. Tune to the APRS system frequency.
Press FUNC key and while F icon is on press SQL key to enter to the data (APRS) mode. Repeat the same sequence to exit.

[⎍⎍] appears on the LCD display when the unit is in data (APRS) mode
The PC monitor will display the initial menu of TNC when it enters to APRS mode.

- Set the packet speed in command mode (cmd:). I.e. cmd:HB 1200 and 9600
- Register your call sign cmd:MY xxxxxx
- Set the speed on GPS port cmd:GB4800
- Set the automatic transmission time separation cmd:LOC E 3
- Set the monitoring header option OFF cmd:LTMH OFF
- The transceiver will start transmitting automatically when data is received from the GPS receiver. Refer to the command chart and EJ41U instruction manual for more details.

Note: Set the transceiver and GPS receiver as far away from each other as possible to minimize possible interference.

9. Maintenance / Reference

Reset

Resetting the transceiver returns all programmed contents to their factory default setting.
If any problems persist, resetting may overcome them and return the transceiver to normal operation.

Reset Procedure

While holding the FUNC key down, turn the power on.
All segments of the LCD will be displayed, then default settings are displayed.

All LCD segments

Note: Take special care when resetting because all settings are initialized.

Factory Default Settings

	DR-135T	DR-135E
VFO frequency	145.00 MHz	145.00 MHz
CALL frequency	145.00 MHz	145.00 MHz
Memory channel 0-99	-	-
Offset direction	-	-
Offset frequency	600 kHz	600 kHz
Channel step	5 kHz	12.5 kHz
Tone setting	-	-
Tone frequency	88.5 Hz	88.5 Hz
DCS setting	-	-
DCS code	023	023
Output power	HI	HI
Keylock setting	OFF	OFF
TOT	OFF	OFF
APO	OFF	OFF
Squelch level	0	0

Trouble Shooting

Please check the list below before concluding that the transceiver is faulty.
If a problem persists, reset the transceiver. This can sometimes correct erroneous operation.

Problem	Possible Causes and Potential Solutions
(a) Power is on nothing appears on Display.	+ and - polarities of power connection are reversed. Connect red lead to plus terminal and black lead to minus terminal of DC power supply.
(b) Fuse is blown.	Check and solve problem resulting in blown fuse and replace fuse with new fuse.
(c) Display is too dim.	Dimmer setting is "LAMP-L". Please make the dimmer setting "LAMP-H".
(d) No sound comes from speaker.	• Squelch is muted. Decrease squelch level. • Tone or DCS squelch is active. Turn CTCSS or DCS squelch off.
(e) Key and Dial do not function.	Key-lock function is activated. Cancel Key-lock function.
(f) Rotating Dial will not change memory channel.	Transceiver is in CALL mode. Press the VFO or memory mode.
(g) PTT key is pressed but transmission does not occur.	• Microphone connection is poor. Connect microphone properly. • Antenna connection is poor. Connect antenna properly.
(h) The unit does not transmit and cannot be reset.	The DSUB-9 port has been connected to a PC without installing the EJ-41U. Disconnect the cable and install EJ-41U properly.
(i) The unit does not work in the packet mode.	• EJ-41U/TNC is not set properly. Make sure the connections and configurations are properly set. • The unit is not in the data mode. Follow the instruction, configure and retry. • The squelch is open. Adjust squelch level properly. • The data transmission speed is not configured. Use command to configure the speed. • The cable is not straight type. Use straight RS-232C cable.
(j) The unit does not work in the APRS mode.	• The unit is not in the data mode. Make sure the connections and parameters are configured properly. • The unit is not configured for automatic transmission. Use PC to configure the TNC. • The squelch is open. Adjust squelch level properly. • GPS receiver is not receiving the data from the satellites. Wait until GPS receiver receives data from satellites.

10. Optional accessories

• EMS-56 DTMF microphone
(standard on T version)

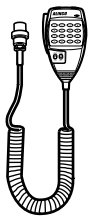

• EMS-53 Microphone
(no keypad: standard on E version)

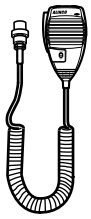

• EJ-41U TNC unit

• EDC-43 Cigar-plug cable
(as above: for Cigar-plug connection)

• EDC-36 Cigar-plug cable with filter
(as above: for Cigar-plug connection. Recommended in case other Alinco handheld transceivers may be used in the vehicle, as this cable can also power the handheld units. See its manual for compatibility)

• EDC-37 DC cable
(for ignition key ON/OFF system: for direct connection to ACC terminal circuit)

11.Specifications

General	
Frequency range	T :TX 144-147.995 MHz RX 118-135.995 MHz (AM) 136-173.995 MHz E :TX 144-145.995 MHz RX 144-145.995 MHz TA :TX 136-173.995 MHz RX 118-135.995 MHz (AM) RX 136-173.995 MHz
Operationg mode	16K0F3E (FM) /8K50F3E (Narrow-FM), F1, F2, F3
Frequency resolition	5, 8.33, 10, 12.5, 15, 20, 25, 30, 50 kHz
Memory channel	100 channels + 1call channel
Ant. impedance	50 ohm unbalanced
Frequency stability	+/-5 ppm
Microphone impedance	2 k ohm
Rated voltage	13.8 VDC +/-15% (11.7-15.8V)
Current	Transmit :approx. 11.0 A Receive :approx. 600 mA (Max) 400 mA (Squelched)
Operating temperature	-10 ˚C - +60 ˚C (+14 ˚F - +140 ˚F)
Ground	Negative ground
Dimensions	142(W) x 40(H) x 174(D) mm (5.58"(W) x 1.57"(H) x 6.83"(D))
Weight	Approx. 1.0 kg (35.3oz)
Transmitter	
Power output	50W (HI) *1 10W (MID) Approx. 5W (LOW)
Modulation	Variable reactance
Spurious emission	-60 dB or less
Maximum frequency deviation	+/-5 kHz / +/-2.5 kHz (Narrow mode)
Receiver	
Circuitry	Double-conversion superheterodyne
Sensitivity	-12.0 dBu (0.25 uV) or less (12 dB SINAD)
Intermediate frequency	1st IF 21.7 MHz 2nd IF 450 kHz
Squelch sensitivity	-16.0 dBu (0.1uV)
Selectivity (-6 dB)	12 kHz or more / 6 kHz or more (Narrow mode)
Selectivity (-60 dB)	28 kHz or less / 14 kHz or less (Narrow mode)
Audio output	2.0 W (8 ohm, 10% distortion)

*1 DR-135TA: 33 W or more

Note : All specifications are subject to change without notice or obligation.

TNC Commands List

The commands supported by the built-in TNC are list below. You must enter a space between a command name (or short-form) and a parameter, or between two parameters; ex.AU OFF.

Command Name	form Short	Default	Parameters	Description
AUTOLF	AU	ON	ON/OFF	When ON, sends a line feed (LF) to the PC after each carriage return (CR).
BEACON	B	EVERY 0	EVERY/ AFTER n (n=0 - 250)	If set to EVERY, sends a beacon packet at intervals of the specified period (n). If set to AFTER, sends a beacon packet only once after the specified period (n). The unit of n is 10 seconds.
BTEXT	BT	-	0 - 159 characters	Specifies the content of the data portion of a beacon packet.
CALIBRAT	CAL	-	-	Sends a space/mark square wave (50/50 ratio). Enter Q to exit Calibrate mode and restore the Command mode.
CHCAK	CH	30	0 - 250	Specifies the interval from signal drop-out until execution of disconnection. The unit of the parameter is 10 seconds.
CONNECT	C	-	Call1 (VIA call1, call3, ...call9)	Sends a connect request. Call 1 is the call sign of the station to be connected to. Calls 2 to call 9 are call signs of stations to be digipeated through.
CONVERSE	CONV or K	-	-	Causes the TNC to enter Converse mode. Press [Ctrl]+[C] to restore the Command mode.
CPACTIME	CP	OFF	ON/OFF	When ON and in Converse mode, sends a packet at intervals of the period determine by PACTIME
CR	CR	ON	ON/OFF	When ON, appends a carriage return (CR) to all packets to be sent.
DISCONNE	D	-	-	Sends a disconnect request.
DISPLAY	DISP	-	-	Causes the TNC to display the current status of all the commands. You can also specify a class identifier A, C, H, I, L, M, or T to display the status of only the desired command class. Enter a space between the command name and a class identifier; ex. DISPLAY H. A (ASYNC): RS-232C port parameters. C (CHAR) : Special TNC characters. H (HEALTH): Counter parameters. I (ID): ID parameters. L (LINK): TNC-to -TNC link status. M (MONITOR): Monitor parameters. T (TIMING): Timing parameters.
DWAIT	DW	30	30	Specifies the interval from no carrier detection until execution of transmission. The unit of the parameter is 10 milliseconds.
ECHO	E	ON	ON/OFF	When ON, causes the TNC to echo received characters to the computer.

Command Name	form Short	Default	Parameters	Description
FIRMRNR	FIR	OFF	ON/OFF	The other station sends a notice (packet) to you if it is not ready to receive data. When ON, receiving such a notice causes the TNC to suspend transmission until it receives a “ready” notice.
FLOW	F	ON	ON/OFF	When ON, starting key entry causes the computer to stop displaying received packets.
FRACK	FR	3	0 - 250	Specifies the interval from one transmission until retry of transmission. The unit of the parameter is 1 second.
GBAUD	GB	4800	4800/9600	Selects 4800 or 9600 bps as the transfer rate between the TNC and the GPS receiver.
GPSSEND	GPSS	-	0 - 159 characters	Specifies the content of the data to be output to the GPS receiver; this data is used to pro gram the default settings on the receiver. The output data is not stored in memory.
GPSTEXT	GPST	$PNTS	0 - 6 characters	Specifies the type of a message to be determined by LTEXT.
HBAUD	HB	1200	1200/9600	Selects 1200 or 9600 bps as the transfer rate between packet stations.
LOCATION	LOC	EVERY 0	EVERY/ AFTER n (n = 0 - 250)	If set to EVERY, sends GPS data at intervals of the specified period (n). If set to AFTER, sends GPS data only once after the specified period (n). The unit of n is 10 seconds.
LPATH	LPA	GPS	Call1 (VIA call2, call3, ... call9)	Specifies calls signs to send GPS data. Call 1 is the call sign of the destination. Call2 to call9 are call signs of stations to be digipeated through.
LTEXT	LT	-	0 - 159 characters	Specifies the content of a message to be included in GPS data.
LTMON	LTM	0	0 - 250	Specifies the interval for displaying a message determined by LTEXT on the screen; a message appears like a received beacon packet. The unit of the parameter is 1 second.
MCOM	MCOM	OFF	ON/OFF	When ON, causes the TNC to also monitor control packets. When OFF, causes it to monitor only information packets.
MCON	MC	OFF	ON/OFF	When ON, causes the TNC to monitor other stations while in connection with the target station.
MONITOR	M	ON	ON/OFF	When ON, causes the TNC to monitor packets.
MRPT	MR	ON	ON/OFF	When ON, causes the TNC to display the entire digipeat list for monitored packets.
MYCALL	MY	NOCALL	6 characters +SSID	Specifies your call sign.
PACLEN	P	128	0 - 255	Specifies the maximum length of the data portion of a packet.
PACTIME	PACT	AFTER 10	EVERY/ AFTER n (n = 0 - 250)	If set to EVERY, sends a packet at intervals of the specified period (n). If set to AFTER, sends a packet only once after the specified period of (n). The unit of n is 100 milliseconds.
PERSIST	PE	128	128	Specifies a parameter to calculate probability for the PERSIST/SLOTTIME method.
PPERSIST	PP	ON	ON	Causes the TNC to use the PERSIST/SLOTTIME method when ON, or the DWAIT method when OFF.

Command Name	form Short	Default	Parameters	Description
RESET	RESET	-	-	Restores the default status for all the commands.
RESPTIME	RES	5	5	Specifies the acknowledgement packet transmission delay. The unit of the parameter is 100 milliseconds.
RESTART	RESTART	-	-	Causes the TNC function as if it is switch OFF then ON.
RETRY	RE	10	10	Specifies the number of transmission retries. If packets are not correctly accepted while in connection, a connect re quest is sent again after the specified number of retries.
SENDPAC	SE	$0D	$0D	Specifies a character that forces a packet to be sent.
SLOTTIME	SL	3	3	Specifies the period of random number generation intervals for the PERSIST/SLOTTIME method. The unit of the parameter is 10 milliseconds.
TRACE	TRAC	OFF	OFF	When ON, causes the TNC to display all received packets in their entirety.
TRIES	TRI	0	0	Specifies the number of transmission retries programmed in the retry counter.
TXDELAY	TX	50	50	Specifies the time delay between PTT ON and start of transmission. The unit of the parameter is 10 milliseconds.
UNPROTO	U	CQ	CQ	Specifies call signs to send a packet in Unprotocol mode. Call 1 is the call sign of the destination. Call2 to call9 are call signs of stations to be digipeated through.
XFLOW	X	ON	ON	Causes the TNC to perform software flow control when ON, or hardware flow control when OFF.

ALINCO,INC.

Head Office: "TWIN21" MID Tower Building 25F
1-61, 2-Chome, Shiromi, Chuo-ku, Osaka 540-8580, Japan
Phone:06-6946-8150 Fax:06-6946-8175
E-mail:export@alinco.co.jp

U.S.A: 438 Amapola Avenue, Suite 130, Torrance, CA 90501, U.S.A
Phone:310-618-8616 Fax:310-618-8758
http://www.alinco.com/

Germany: Eschborner Landstrasse 55, 60489 Frankfurt am Main, Germany
Phone:069-786018 Fax:069-789-60766

Printed in Japan
Copyright Alinco,Inc. 2000 PS0349