Important Safety Instructions

The following instructions pertain to the risk of fire, electric shock or bodily injury. Please read all of these instructions carefully.

1. Save these instructions for later use.
2. Follow all of the instructions and warnings marked on this product or included in this manual.
3. Do not use this computer on an unstable cart, stand or table. The product may fall, causing serious damage to the product. Don't use this product on a bed, sofa, rug or other similar surface.
4. Slots and openings in the cabinet and the back have been provided for ventilation to ensure reliable operation of your computer, and to protect it from overheating. These openings must not be blocked or covered. This product should never be placed near or over a radiator or heat register. This product should not be placed in a built-in installation unless proper ventilation is provided.
5. Never push objects of any kind into the computer through the cabinet openings. Objects may touch dangerous voltage points or short out parts that could result in a fire or electrical shock. Never spill liquid of any kind on the product.
6. This computer should only be connected to the AC power source indicated on your computer system's information label. If you are not sure of the type of AC power available, consult your dealer or local power company. Only connect this computer to a power outlet that matches the power requirements of this computer.
7. Do not allow anything to rest on the power cord. Do not locate this product where people will walk on the cord.
8. If you have to use an extension cord with this computer, make sure that the total amperage rating of all equipment plugged into it does not exceed the amperage rating of the extension cord. Also, make sure that the total of all products plugged into the main AC power outlet does not exceed 15 amps.
9. Unplug your computer from the main electrical power outlet before cleaning. Do not use liquid cleaners or aerosol cleaners. Use a damp cloth for cleaning.
10. Do not use this computer near water.
11. This product is equipped with a 3-wire grounding type plug, a plug having a third (grounding) pin. This plug will only fit into a grounding-type power outlet. This is a safety feature. If you are unable to insert or replace your obsolete outlet, contact your electrician to replace your obsolete outlet. Do not defeat the purpose of the grounding-type plug.

Maintenance

If the product does not operate normally, adjust only those controls that are covered by the operating instructions. Improper adjustment of other controls may result in damage and may require extensive repair work to restore to normal operation.

Unplug this product from the main power outlet and call for service under any of the following conditions:

1. If the power cord or plug is damaged or frayed.
2. If liquid has been spilled into the product.
3. If the product has been exposed to rain or water.
4. If the product has been dropped or the cabinet has been damaged.
5. If the product exhibits a distinct change in performance indicating a need for service.

Stop

If you ever have to remove the main system unit cover, observe the following precautions:

1. The power supply cord must be unplugged before the main system unit cover is removed. (Separe le cordon d'alimentation et puis enleve le couvercle.)
2. Once removed, the cover must be replaced and screwed in position before the power supply cord is plugged back in. (Apres le couvercle a enleve, visse le couvercle en place et remettre le cordon d'alimentation.)

Wichtige Sicherheitsvorschriften Unbedingt Beachten

Allgemeine Sicherheit

Die nachfolgenden Anweisungen betreffen die Gefahr von Verletzungen durch elektrische Spannung, Feuer und mechanische Einwirkung. Bitte lesen Sie diese Anweisungen sorgfältig.

1. Beachten Sie alle Hinweise, die am Gerät selbst angebracht oder in den zugehörigen Handbuchrn vermerkt sind.
2. Stellen Sie das Gerät an einem sicheren, stabilen Arbeitsplatz auf.
3. Am Gerät angebrachte Öffnungen (Schlitze und sonstige Öffnungen) dienen der Belüftung des Gerätes. Um ein zuverlässiges Arbeiten des Geräts zu gewährleisten und um Überhitzung zu vermeiden, müssen diese Öffnungen unbedingt freigehalten werden. Betreiben Sie das Gerät nie auf Betten, Sofas oder anderen, weichen Unterlagen.
4. Stecken keine Gegegenstände (Schraubenzieher, Büsroklamern etc.) in die Öffnungen. Sie wurden damit Kurzschlüsse herbeiführen die zur Zer störung des Geräts führen, sich der Gefahr eines Stromschlages aussetzen oder das Gerät in Brand setzen.
5. Das Gerät darf nur an vorschriftmäßige Steckdosen mit der auf dem Gerät angegebenen Netzspannung angeschlossen werden. Wenn Sie nicht sicher sind, welche Netzspannung richtig ist, wenden Sie sich an den Lieferanten des Gerätes oder an das zuständige Elektriziträtswerk. Bitten nur an Genügend stark abgesicherte Steckdosen anschließen, die der Leis tungsaufnahme des Gerätes entsprechen.
6. Auf das Netzanschlußkabel dürfen keine Gegenstände gestellt werden. Legen sie das Netzkabel so, daßniemand darauftreten oder darüber stolpern kann.
7. Wenn Sie Verlängerungskabel benutzen, müssen Sie sicher sein, daß die gesamte Leistungsaufnahme nicht größer ist als das Verlängerungskabel zulaßt. Der gesamte Stromverbrauch aller angeschlossenen Geräte darf nicht mehr als 15 A betragen.
8. Wenn Sie das Gerät reinigen, muß das Netzkabel aus der Steckdose gezogen werden.
9. Das Gerät dürfen Sie nicht in der Näh von Wasserleitungen benutzen.

Wartung Des Computers

Wenn der Computer nicht ordnungsgemäß arbeitet, dürfen Sie nur die Einstellungen vornehmen, die im Handbuch genannt werden. Andere Einstellungen oder Verän derungen können den Computer beschädigen oder zerstören. Umfangreiche und kostspielige Reparaturen würden notwendig werden, um das Gerät wieder betriebsfähig zu machen.

Ziehen Sie den Netzstecker aus der Steckdose und verständigen Sie den zuständigen Kundendienst bei folgenden Storungen:

A Netzkabel ist defekt oder strak abgenutzt.

B Flüssigkeit ist in das Gerät geschüttet worden.

C Das Gerät war Regen oder Leitungswasser aus-gesetzt.

D Das Gerät ist heruntergefallen oder das Gehäuse ist beschädigt.

E Das Gerät arbeitet nicht mehr richtig.

Achtung

Wenn Sie das Gerät Öffnen müssen (Abnahme der verschraubten Haube), ist unbedingt folgendes zu beachten:

A Das Netzkabel muß aus der Steckdose gezogen werden und zwar bevor Sie das Gerät Öffnen.

B Die Haube muß wieder monitiert und verschraubt werden. Erst dann darf das Netzkabel wieder eingesteckt werden.

Safety Instruction

Ensure that the appropriate power cord is supplied with personal computer. If the power cord is not supplied with personal computer, use the correct listed cord sets as below:

Rating	Type	Note
125V, 10A Min. 18AWG/3	SVT MAX. 4.5m long	— One end terminated with molded on cord connector body. Attachment plug cap with a nama 5-15P.
250V, 6A Min. 18AWG/3	SVT Max. 4.5m long	— One end terminated with molded on cord connector body.) Attachment plug cap with a nama 6-15P.

Before You Reading

The information in this user's guide is subject to change without notice.

eMachines shall not be liable for technical or editorial errors or omissions contained herein; nor for incidental or consequential damages resulting from the furnishing, performance, or use of this material.

NOTE

Depending on the model, your computer's components may vary and look slightly different than those pictured.

Blank

CONTENTS

Chapter 1 Introduction

System Features 1-1
System Overview 1-3
Front 1-3
Rear 1-6

Chapter 2 Setting Up Your System

1. Selecting a Location 2-1
2. Checking the Voltage Selection 2-2
3. Connecting Your Peripheral Devices 2-3
Connecting a Monitor 2-3
Connecting a Keyboard and Mouse 2-3
Connecting Modem Cables 2-4
Connecting Ethernet Cables 2-5
Connecting Audio Devices 2-6
Connecting a Printer 2-7
Connecting a Serial Device 2-7
Connecting the USB Devices 2-8
Connecting a Power Cord 2-8
4. Turning the Computer On and Off 2-9
Turning On the Computer 2-9
Turning Off the Computer 2-9

Chapter 3 Using Your Computer

Using a Floppy Disk Drive 3-1
Using a CD/DVD-ROM Drive 3-3
Using a CDRW/COMBO Drive 3-4
Using Special Keys on the Keyboard 3-5
Using a Mouse 3-7
Changing the Display Resolution and Color Depth 3-8
Controlling the Audio Volume 3-9
Configuring Shortcut Keys 3-11

Chapter 4 BIOS Configuration

4.1 Entering Setup 4-1
4.2 Control Keys 4-2
4.3 Getting help 4-2
4.3.1 Main Menu 4-2
4.3.2 Status Page Setup Menu/Option Page Setup Menu 4-2
4.4 The Main Menu 4-3
4.5 Standard CMOS Features Menu 4-5
4.6 Advanced BIOS Features 4-8
4.7 Advanced Chipset Features 4-11
4.8 Integrated Peripherals 4-13
4.9 Power Management Setup 4-18
4.10 PnP/PCI Configurations 4-22
4.11 PC Health Status 4-24
4.12 Frequency/Voltage Control 4-26
4.13 Load Fail-Safe Defaults 4-27
4.14 Load Optimized Defaults 4-28
4.15 Set Supervisor / User Password 4-29
4.16 Save & Exit Setup 4-30
4.17 Exit Without Saving 4-31

Chapter 5 Inside Your Computer

Removing the Cover 5-1
Replacing the Cover 5-3
Internal Components 5-4
Mainboard Overview 5-5
Changing the Jumpers 5-6
Connecting a Power Supply Connector 5-7
Connecting the Front Panel Connector Cable 5-8

Chapter 6 and Drives Installing and Removing Board Options

Installing an Expansion Card 6-1
Installing and Removing Memory Modules 6-4
    Installing a Memory Module 6-4
    Removing a Memory Module 6-5
Installing and Removing the Processor 6-6
Replacing a Hard Disk Drive 6-9
Installing the 5.25-inch Device in the Peripheral Bay 6-11
Replacing the Battery 6-14
After Installing Options 6-15

Chapter 7 Application Programs

Player 7-1
AudioStation 7-2
PowerDVD 7-3
    Playing the PowerDVD 7-3

Chapter 8 Using the Restore CD

Restoring Your Original Software 8-1
Installing Drivers or Application Programs 8-3

Appendix A Specifications

Specifications A-1

Appendix B Solving Common Problems

Power B-1
Hard Disk Drive B-1
CD/DVD-ROM Drive B-2
Audio B-3
Floppy Disk Drive B-3
Display & Monitor B-4
Keyboard B-7
Mouse B-7
Option Card B-7

Appendix C Approval Statements

Battery Warning Instruction C-2
Fuse Warning Instruction C-3
Laser Product C-3

Chapter 1
Introduction

This chapter describes the major features of your computer.

System Features

Your personal computer is a powerful, versatile, and high performance system that offers exceptional speed and convenience in a compact design.

Your computer offers the following features:

1. Micro ATX form factor
2. Socket 370 Processor based PC/AT compatible mainboard
3. Socket 370 Pins ZIF white socket on board
4. Intel Celeron 66MHz processor in a PPGA package
5. Intel Pentium III 100/133MHz in a PPGA package
6. 2 Banks 168 pins DIMM sockets, expandable up to 512MB using SDRAM modules
7. Math coprocessor built in the microprocessor chip
8. Supports external Modem Ring-On on COM A & COM B and internal Modem Ring-On
9. Supports Wake-up on LAN
10. Supports AMR Interface
11. Supports feature connector for TV-Out or DFP (Digital Flat Panel)
12. Support 2 channels Ultra ATA 66/DMA 33 IDE ports for 4 IDE Devices

13. Built-in AGP video controller
14. Built-in AC 97-Link software audio
15. Supports 1 x Line in, 1 x Line out, 1 x Mic in, 1 x CD Line in, 1 x GAME Port
16. Supports 2 x COM (16550), 1 x LPT (EPP/ECP/SPP). 1 x 1.44MB Floppy Port
17. Intel 82810 core and ICH 82801 super I/O controller
18. Advanced Power Management (APM) and Advanced Configuration and Power Interface (ACPI)
19. 3 PCI expansion card connectors
20. System BIOS and video BIOS shadow RAM
21. Password function by using BIOS
22. Support Two USB ports
23. One built-in serial port and one built-in parallel port
24. A built-in PS/2 style keyboard port
25. A built-in PS/2 compatible mouse port
26. Three audio jacks and one MIDI/Game port connector
27. Licensed AWARD BIOS, Flash ROM
28. Plug-and-Play (PnP) BIOS feature

System Overview

The following section describes names and functions of your system.

Front

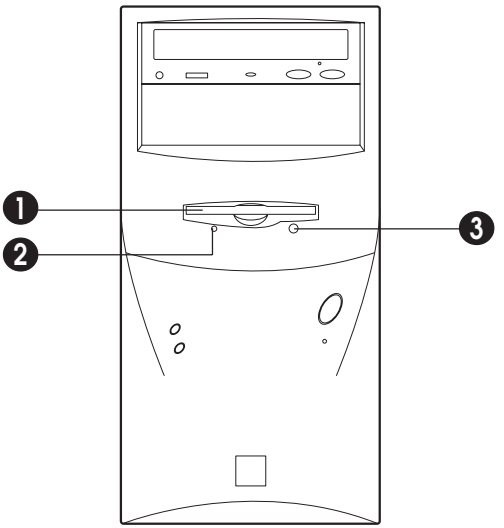

NOTE

Some devices such as CD-ROM drive can be changed by user's system configuration.

1 Floppy Disk Drive

The floppy disk drive accepts 3.5-inch floppy diskettes.

2 Floppy Disk Drive Access Indicator

This indicator lights on while the drive is reading or writing data to a disk. Wait until the light off before you remove a disk from the drive.

3 Eject Button

Press this button to eject any disk in the drive.

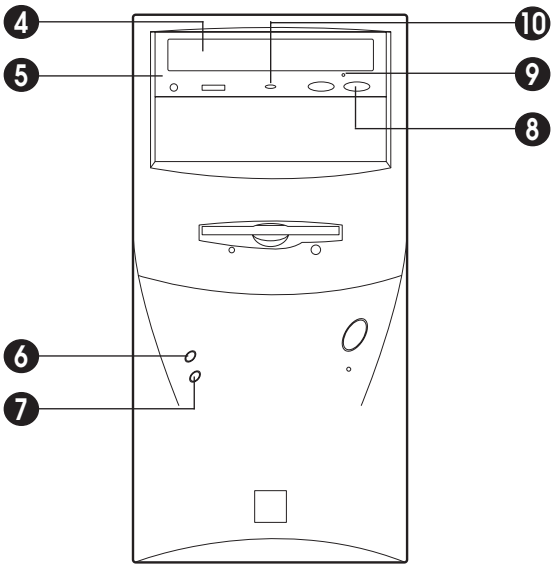

4 Disc Tray

The disc tray accepts a CD/DVD/CDRW/COMBO disk.

5 CD/DVD/CDRW/COMBO Drive

This drive is used to play DVD (DVD-ROM drive only), music CDs, photo CDs, video CDs, or to load software package onto the hard disk drive.

6 Hard Disk Drive Access Indicator

This indicator lights on while the hard disk drive is reading or writing data to the other disk.

7 Power Indicator

This Power indicator in the center of the power switch lights up when the computer is on. This indicator lights on while your system is on.

8 Load/Eject Button

Pressing this button loads or ejects the CD/DVD/CDRW/COMBO tray.

9 Emergency Eject Hole

Insert a road in the hole to eject the tray only when your system is off.

10 Busy Indicator

This indicator lights on while initializing or data reading.

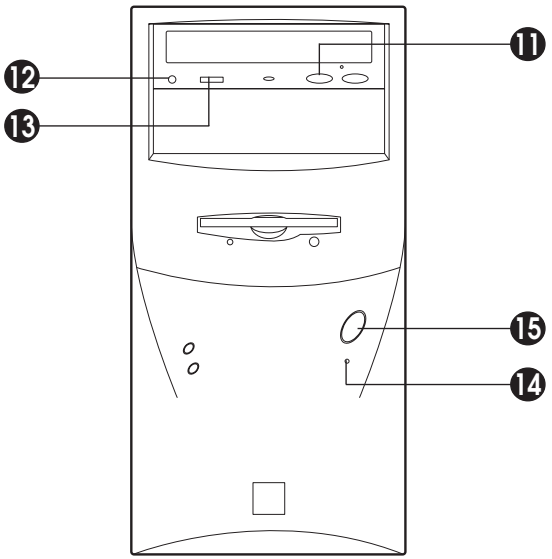

11 Play/Skip Button

Pressing this button plays an audio CD. The next song is played when the button is pressed again.

12 HeadPhone JACK

Connect a headphone plug to this port when you want to hear an Audio CD with headphone.

13 HeadPhone Volum Control

Adjust the headphone volume. (Only Audio CD)

14 Reset

15 Power Button

This button controls your system's AC input power. When the system is off, pressing the button makes your system on. The power indicator lights on while the power of system is on. When your system is on, pressing the power button turns off the system.

Rear

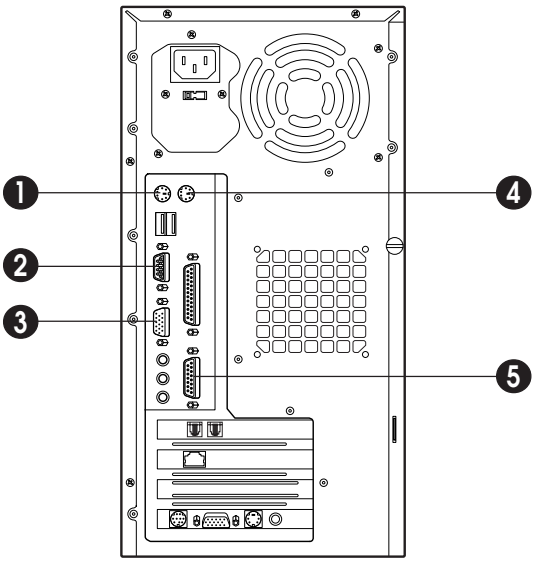

NOTE

Your actual modem card may differ from the illustrations shown in this user's guide.

1 Keyboard Connector

This connector is for the PS/2 type's Keyboard.

2 Serial Port (COM1) Connector

This connector is for serial devices such as an external modem, serial mouse, and etc.

3 Video Connector

The signal cable from your monitor is connected with this connector.

4 Mouse Connector

This connector is for the PS/2 type's mouse.

5 MIDI/Game Port Connector

Any MIDI or game input device such as a joystick, game pad, steering wheel, and etc for playing computer game can be connected with this port.

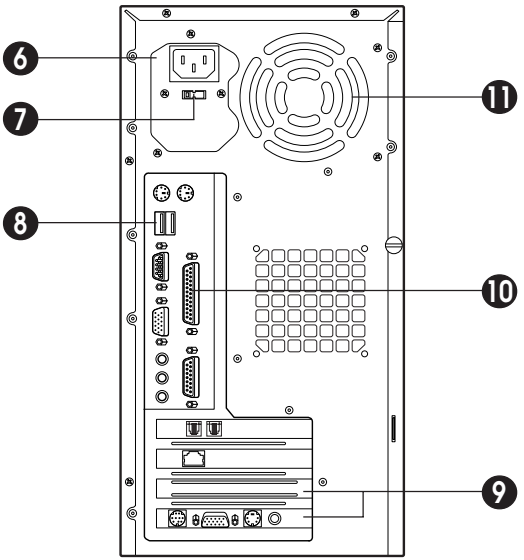

6 AC Power Receptacle

Your system power cable plugs into the AC power receptacle.

7 Voltage Selection Switch

The voltage selection switch must be set to match the AC power voltage you use.

CAUTION

Setting the voltage selection switch incorrectly will give the serious damage in your system. Verify that the switch is set correctly before you power on your system.

8 USB Connector

You can connect any USB compliant devices to the USB connector. USB devices include low-speed peripherals such as microphone, digital joystick, and speaker.

9 Option Card Slot Covers

10 Parallel Port (LPT1) Connector

This connector is for parallel devices such as a printer, and etc.

11 Air Ventilation Holes

The hole for air ventilation.

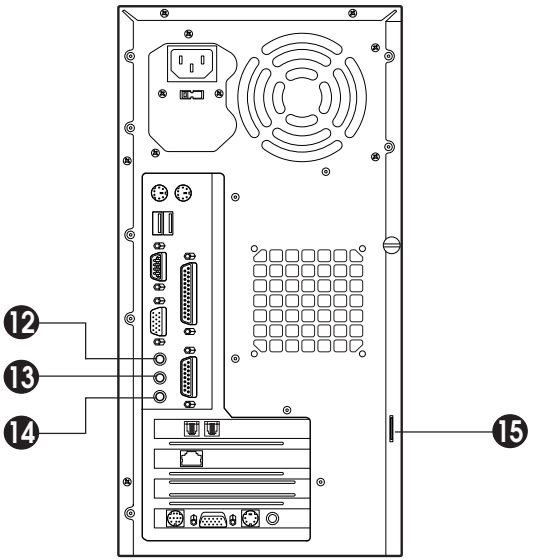

12 Speaker Jack

The Speaker jack can be used to attach most speakers with integrated amplifiers.

13 Line-in Jack

The jack is connected with the record/playback device such as a cassette player, CD player, and etc. .

14 Microphone Jack

The jack is connected with the personal computer microphone to integrate your voice or musical input into a sound application. .

15 Padlock Ring

The padlock ring allows you to secure the system cover to the chassis to prevent unauthorized access to the inside of the computer. To use padlock ring, insert a commercially available padlock through the ring and then lock the padlock.

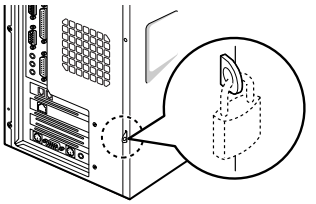

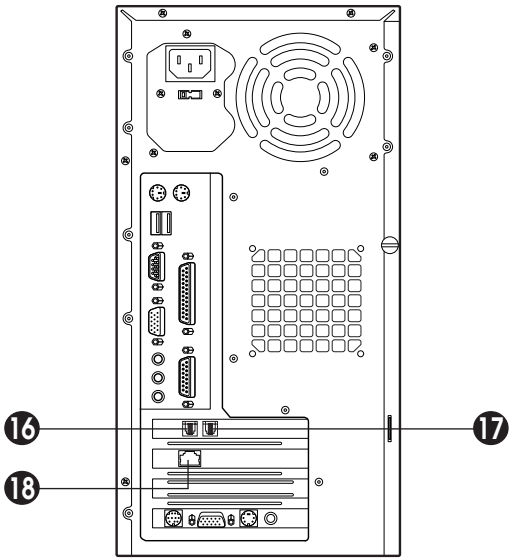

16 Phone Jack

You can connect the RJ11 phone jack cable from the telephone to this connector. The jack is connected with the RJ11 phone jack cable from the telephone.

17 Wall Jack

You can connect the RJ11 wall jack cable for using faxes, e-mail, and internet access. The jack is connected with the RJ11 wall jack cable to use faxes, e-mail, internet access, and etc.

18 Ethernet Jack

Blank

Chapter 2
Setting Up Your System

This chapter describes how to set up and turn on/off your system. Just follow the steps in this chapter.

1. Selecting a Location

Before you set up your computer, it is important to choose a safe and convenient location that provides the following:

- A large, sturdy desk or table strong enough to support the weight of your system and all of its components.
- A flat and hard surface. Soft surfaces like beds and carpeted floors attract static electricity, which can erase data on your disks, damage the computer's circuitry, and prevent proper ventilation.
- Good air circulation. Leave several inches of space around the computer so air can move freely.
- Moderate environment conditions. Select a cool, dry area and protect your computer from extremes in temperature, humidity, dust, and smoke. Avoid direct sunlight or any other source of heat.
- Appropriate power sources. To prevent static charges, connect all your equipment to three-hole, grounded outlets. You need one outlet for the computer, one for the monitor, and an additional outlet for a printer and any other peripheral devices.
- No electromagnetic interference. Do not place your system too close to any electrical device, such as a telephone, which generates an electromagnetic field.

2. Checking the Voltage Selection

A power supply is integrated into the system to provide power to the mainboard, option cards, and peripheral devices. The power selection switch on the system back panel can be used to set the power supply to operate at 115V or 220V.

To verify that your system has the correct setting for your environment, check the voltage selection switch.

WARNING

If you set the voltage selection switch incorrectly, your system will have the serious damage. Verify that the switch is set correctly before you power on your system.

Using a tool such as an opened paper clip, slide the voltage selection switch to the correct voltage position.

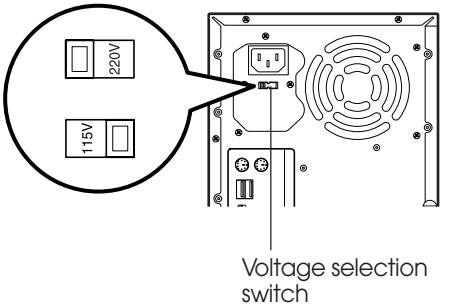

3. Connecting Your Peripheral Devices

Connecting a Monitor

Connect the monitor cable to the video connector on the rear panel of your system. If the connector has retaining screws, be sure to tighten them.

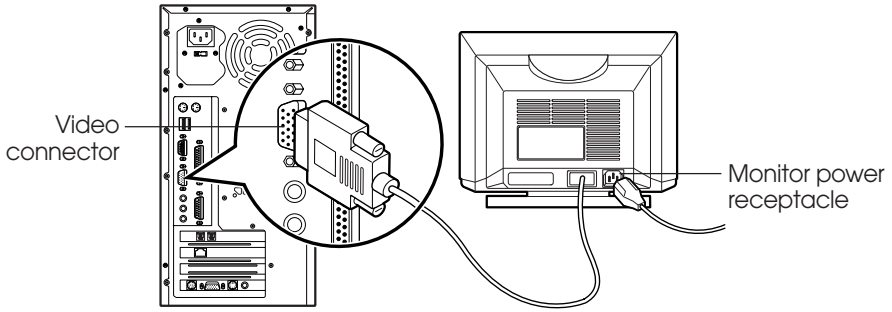

Connecting a Keyboard and Mouse

Plug the keyboard and mouse cable connectors into the keyboard and mouse connectors on the rear panel of your system.

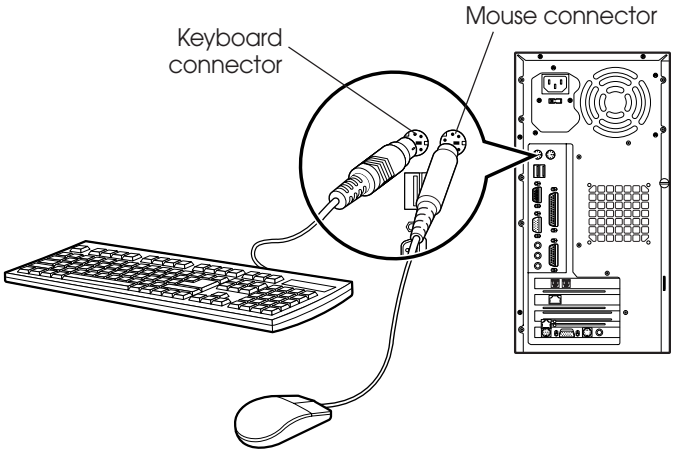

NOTE

Depending on the model, your keyboard may have no shortcut keys (Internet, Email, Search, Mute, Volume Up, and Volume Down).

Connecting Modem Cables

if you use an optional modem card, connect the phone and wall lines to the modem card.

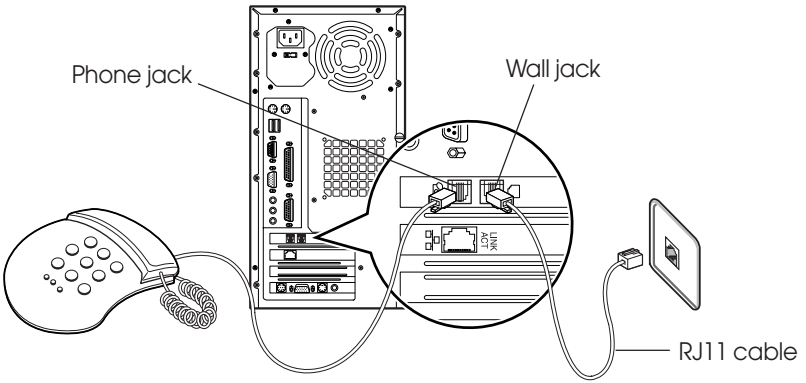

NOTE

Depending on you computer model, your modem card can be different with the picture. For more information about using the modem, refer the modem manual.

CAUTION

For protection of your computer during a lightning storm, unplug the wall jack connector from the wall outlet. This will prevent damage to the computer due to lightning.

Connecting Ethernet Cables

If you use LAN card, Cabel modem card, ADSL card, and etc, connect the card with Ethernet card as the below.

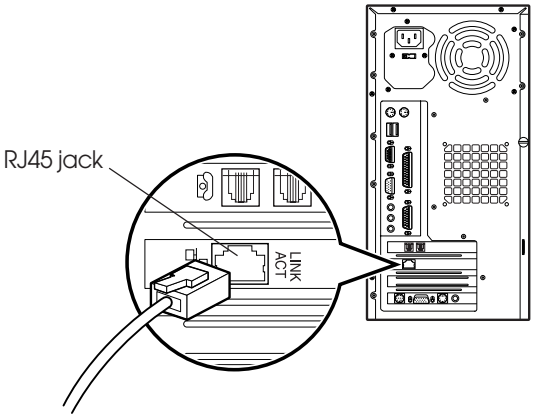

NOTE

If you use Windows ME, Ethernet card is already set up automatically.

If you use the other operating system, you must install Ethernet card driver.

CAUTION

To use high speed communication you must install the hardware driver and then set up the protocol in Network property.

Refer the manual of high speed communication service provider.

Connecting Audio Devices

Your computer has three integrated audio controller jacks (Speaker, Line-in, and Microphone jack) and one MIDI/Game port connector.

You can connect a microphone to the microphone jack, a speaker or headphone to the speaker jack, and a audio playback device such as cassette player, CD player, or etc to the line-in jack.

Any MIDI or game input device such as a joystick, game pad, steering wheel, and etc for playing computer game can be connected with this port.

Before you connect audio devices to the three jacks and the MIDI/Game port connector, your system must be off. And then connect the devices with the each connectors on the rear panel of your system.

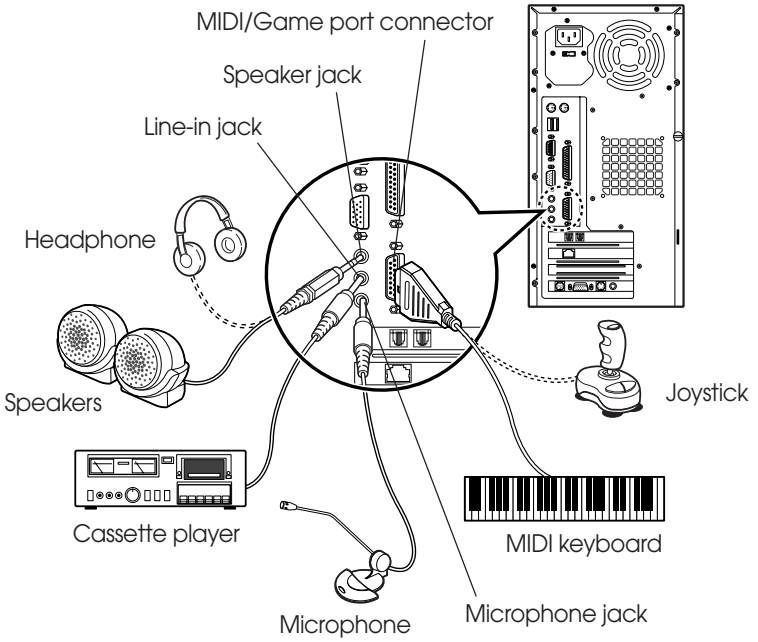

Connecting a Printer

Connect the printer cable connector with the parallel connector of your system. If the plug has retaining screws, tighten them.

Connector the other side printer cable to the printer.

Connector the power line to the printer and plug it into an appropriate grounded electrical outlet.

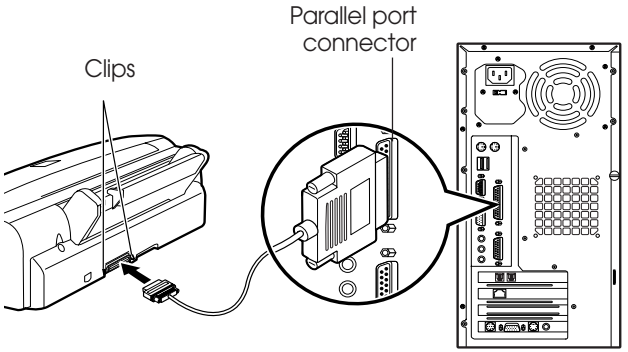

Connecting a Serial Device

If you have any serial device such as a printer, a modem, and etc, connect it to the serial port of your system.

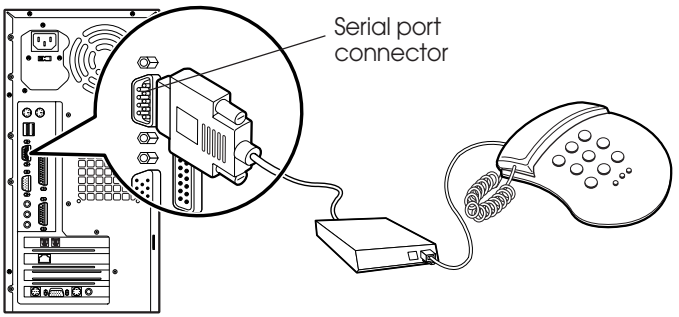

Connecting the USB Devices

If you use any USB devices, you can connect it to the USB connectors. Connect USB device cable into the USB port of your system.

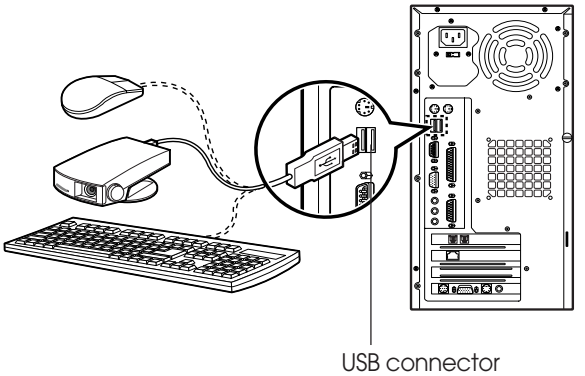

Connecting a Power Cord

Before you plug the power cord into the wall socket, you should set the voltage selection switch to correct position. The voltage selection switch must be set to reflect the correct voltage the system operates on.

If you set the voltage selection switch to correct position, plug the power cord into the AC power receptacle on the back panel. Then plug the other end of the power cord into an appropriate grounded electrical outlet.

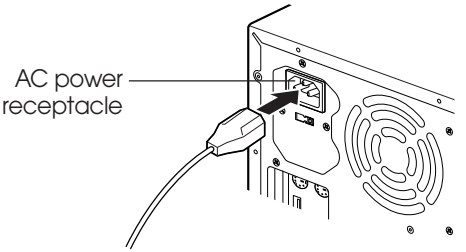

WARNING

To prevent an electronic shock, make sure to plug the cord into the system before you plug it into the wall socket.

CAUTION

For protection of your computer and other devices during a lightning storm, or when it is left unattended and unused for long periods of time, unplug the computer and other devices from the wall outlet and disconnect the antenna or cable system. This will prevent damage to the computer and other devices due to lighting and power line surges.

4. Turning the Computer On and Off

Follow the instructions below to turn on the computer or to turn it off.

Turning On the Computer

To turn on your computer, follow the below steps.

1. Turn on the monitor and other devices connected to your system.
2. Press the power button on the front panel of your computer.
3. The system will load Windows ME.

Turning Off the Computer

To turn on your computer, follow the below steps.

1. Before you turn off computer, save all the data and then close all the application programs you use.
2. Click the Start button, and then click Shut Down.
3. Select Shut down in the dialog box, and then click OK button.
4. Turn off the monitor and any other peripheral devices.

Blank

Chapter 3
Using Your Computer

To use your computer, you must install the operating system on your computer.

If you want to install Windows ME, follow the instructions in your Windows ME manual. (Windows ME may be installed already on your system).

To install another operating system such as OS/2 Warp or UNIX, refer the manual that came with the system).

The procedures in this manual assume that you are using Windows ME with your computer.

Using a Floppy Disk Drive

If you want to use 3.5 inch disk, insert the disk into 3.5 inch disk drive as the below picture until it is placed on the proper position.

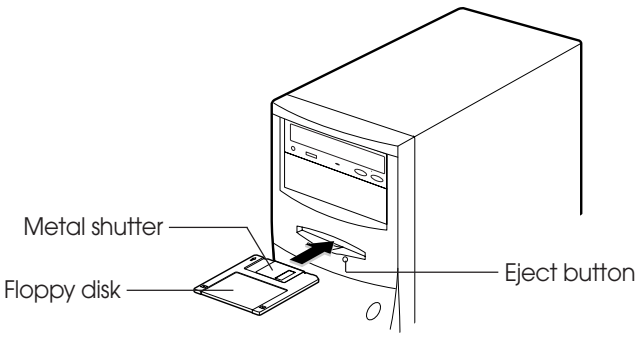

If you want to remove the disk, press the eject button after you make sure the drive light is off.

NOTE

If you remove a disk or turn off the computer while the drive light is on, you can lose data in the disk.

Also, remove all disks before you turn off the computer.

You can write-protect a disk to prevent its data from being altered. When a disk is write-protected, you can read it and copy data from it, but you cannot store new data on it or delete any files it contains.

The write-protect is on the back of a 3.5 inch disk as the below picture. If you want to use write-protect, slide the switch toward the edge of the disk.

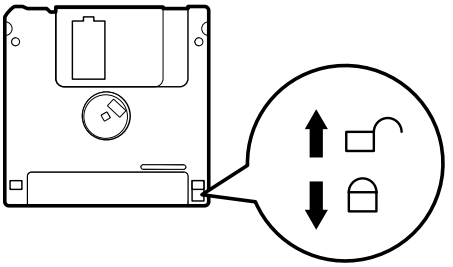

Using a CD/DVD-ROM Drive

To use CD/DVD ROM drive, turn on your system and then press the load/eject button. When the disk tray pops out, put CD/DVD title in the tray with the label side up. Press the load/eject button again or gently push the disk tray to close it. During the procedure, the busy indicator will flash.

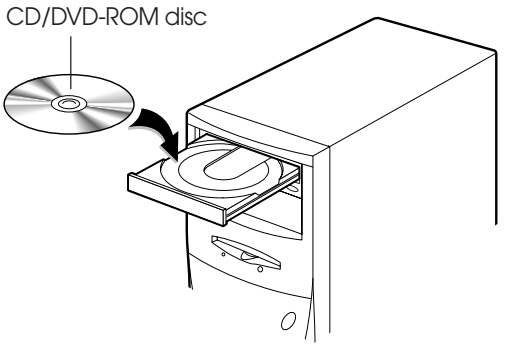

If you want to remove the CD/DVD title, make you sure that the busy indicator is off. Press load/eject button, and then remove CD/DVD title when the disk tray pops out. Press load/eject button again to close the tray.

NOTES

When your system is turned off, you may need to open the CD/DVD tray. At this time, insert a fine rod such as an opened paper clip into the emergency eject hole as far as it will go. When the tray is slightly open, carefully pull it out.

Your computer references the CD/DVD-ROM drive as D: unless you have more than one hard disk drive or partition. Then it automatically recognizes it as the next available drive letter.

The high speed DVD-ROM drive (above 6x) may take few seconds to stop the running of the spindle motor when you press the eject button, immediately after using CD or DVD title, to open the tray. Wait about 5 to 10 seconds after pressing the eject button to give the DVD drive sufficient time to stop the running of the spindle motor and eject the tray.

Using a CDRW/COMBO Drive

To use CD/CDRW/DVD ROM drive, turn on your system and then press the load/eject button. (CDRW drive does not recognize DVD title.)

When the disk tray pops out, put CD/CDRW/DVD title in the tray with the label side up. Press the load/eject button again or gently push the disk tray to close it. During the procedure, the busy indicator will flash.

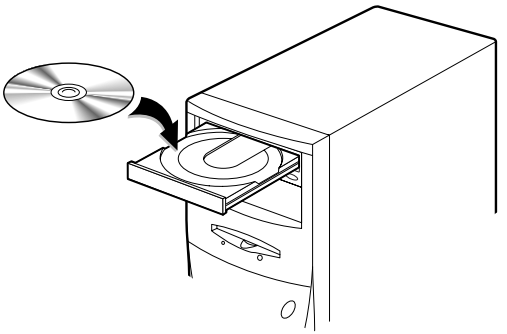

If you want to remove the CD/CDRW/DVD title, make you sure that the busy indicator is off. Press load/eject button, and then remove CD/CDRW/DVD title when the disk tray pops out. Press load/eject button again to close the tray.

NOTES

When your system is turned off, you may need to open the CDRW/COMBO tray. At this time, insert a fine rod such as an opened paper clip into the emergency eject hole as far as it will go. When the tray is slightly open, carefully pull it out.

Using Special Keys on the Keyboard

Keys on the keyboard, that are described in the following table serve special functions when your computer is running your operating system or application programs.

Key	Purpose
Tab	Moves the cursor one tab to the right in normal mode and one tab to the left in Shift mode.
Caps Lock	Changes the letter keys from lowercase to uppercase; changes back to lowercase when pressed again. The numeric/symbol keys on the top row of the keyboard and the symbol keys in the main part of the keyboard are not affected.
Shift	Produces uppercase characters or the top symbols on the keys when used with the main character keys. Produces lowercase characters when the Caps Lock function is on.
Ctrl	Works with other keys to perform special (control) function.
Alt	Works with other keys to enter alternate character codes or functions.
Backspace (←)	Moves the cursor back one space, deleting the character to the left of the cursor.
Enter	Ends a line of keyboard input or executes a command.
Insert	Turns the insert function on and off.
Delete	Deletes the character marked by the cursor.
Home, End, PgUp, PgDn, →,←, ↑,↓	Control cursor location.
Esc	Controls the current command line or operation.
Num Lock	Changes the function of the numeric/cursor keys from entering numbers to positioning the cursor.
	Changes use of the numeric keys on the numeric keypad as mouse keys. To enable the function of the key, set the Mouse tab in "Accessibility Options" in Control panel.
F1-F12	Perform special functions within application programs.
Print Screen	Outputs the screen display captured on the clipboard. When used with alt key, this key captures active window.
Sys Rq	Captures the screen display on the clipboard. When used with Alt key, this key captures active window.
Scroll Lock	Controls scrolling in some applications.
Pause	Suspends the current operation.
Break	Stops the current operation (used with Ctrl).
	Displays the start menu.
	Displays the short menu for the selected location. It corresponds to the right button of a mouse and displays a different menu applicable to Windows 98 other application programs.

Key	Purpose
Internet*	Launches the Internet browser.
Email*	Launches an e-mail application.
Search*	Launches an Internet search page.
Mute*	Mutes the sound.
Volume Up*	Increases the current volume level.
Volume Down*	Lowers the current volume level.

**Depending on the model, your keyboard may have no these keys.*

The Caps Lock, Num Lock, and Scroll Lock keys work as toggles; press the key once to turn on a function and again to turn it off. When the function is enabled, the corresponding light in the upper right corner of the keyboard is on.

The numeric keys on the numeric keypad of your keyboard can be used as MouseKeys to move a mouse pointer. To use the numeric keys as MouseKeys, first you should set the Mouse tab in "Accessibility Options" of the Control Panel.

NOTES

Depending on the model, your keyboard may have no shortcut keys (Internet, Email, Search, Mute, Volume Up, and Volume Down).

In case of Easy Keyboard, you can configure the Internet, Email, and Search buttons to launch an application or Internet browser of your choice. To do this, click Start, point to Easy Keyboard, and then click Key Configuration. When the Shortcut Key Configuration window appears, select the execution files for the buttons.

Using a Mouse

Generally a mouse functions as follows:

- **Click ( )** : Press and release the left mouse button once.
- **Double click ( )** : Quickly press and release the left mouse button twice.
- **Click with the right mouse button ( )** : Press and release the right mouse button once.
- **Drag ( )** : While pressing and holding down the left or right mouse button, move it to another location and then release the mouse button.

When using Windows ME, you can change mouse button configurations in the Mouse section of the Control Panel. If you are left-handed, you can change configuration from right-handed to left-handed.

See “mouse, reversing buttons” in the Help index for more information.

Changing the Display Resolution and Color Depth

To change the display resolution and color depth, follow the below steps.

1. Point to Settings after click the Start button, and then click Control Panel.
2. Double click the Display icon, or click the right mouse button on the empty desktop area and then click Properties.
3. When the Display Properties window appears, click the Settings tab.
4. Select the color depth from the Colors area and the resolution from the Screen area.
5. Click the OK button.

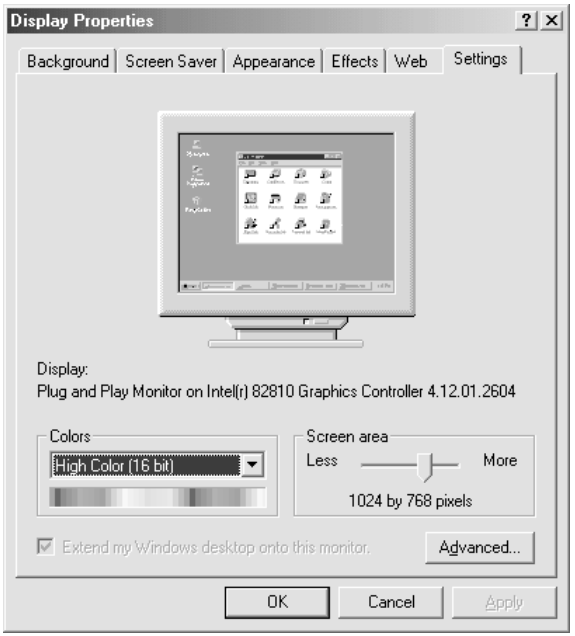

Controlling the Audio Volume

You can control the audio volume level by using the volume up/down button on the keyboard,

volume control box, or Master window.

To control the audio volume by using the volume control button, press the volume up/down button on the keyboard.

To control the audio volume in the control box, follow the below steps.

1. Click on the Speaker icon located on the right of your Windows taskbar.

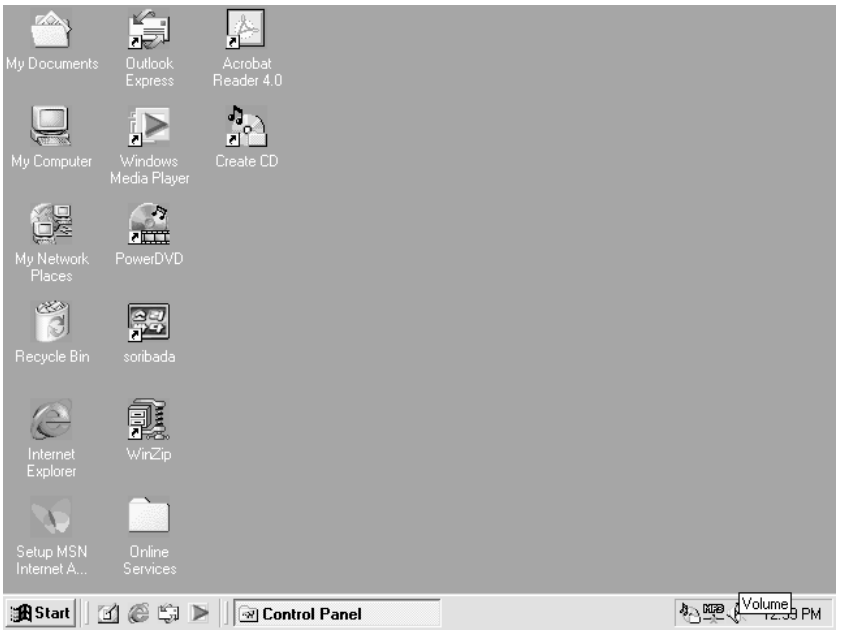

2. Adjust audio volume level by using the volume bar up or down when the volume control box appears.

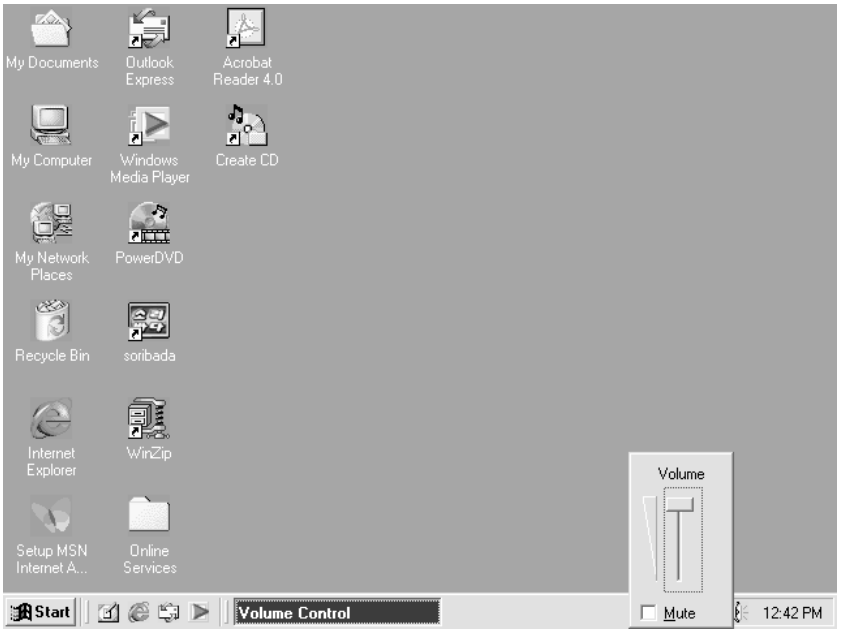

To control the audio volume level for each device by using the Master Out window, follow the below steps:

1. Double click the Speaker icon located on the Windows Me taskbar.

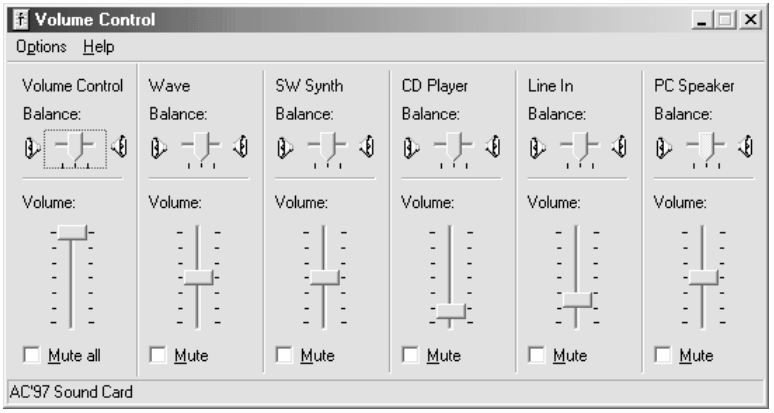

2. Adjust audio volume level by using the volume bar up or down when the Master Out window appears.
3. Click the Close button.

Configuring Shortcut Keys

NOTE

The configuration program is available only on the Easy Keyboard (has shortcut keys) model.

Your system provides a configuration program for mapping programs to the Shortcut keys (Internet, Email, and Search) on the upper-right corner of the keyboard.

To map a certain program for short-cut key on the keyboard, follow the below seeps

1. Point to Programs after click Start, and then click Key Configuration.
2. The Shortcut Key Configuration window will appear.

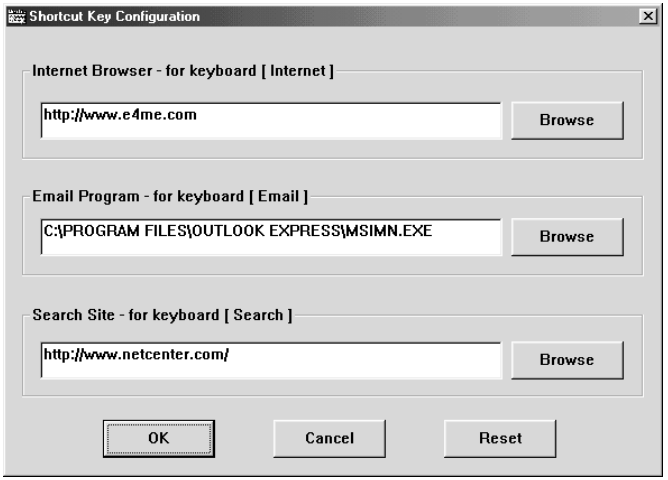

3. Click the Browse button.
4. Select a program file for the shortcut key when the Open window appears.

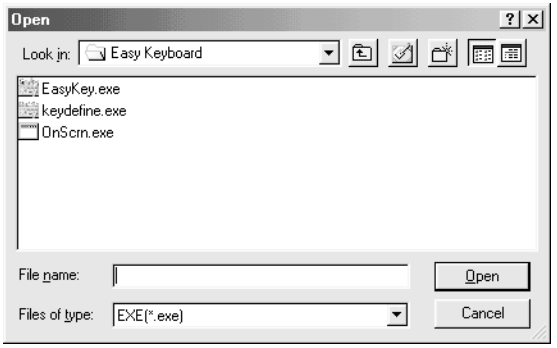

5. Click the Open button.
6. In the Shortcut Key Configuration window, click OK.
   Click OK in the Shortcut Key Configuration window.

Chapter 4
BIOS Configuration

Award's BIOS ROM has a built -in Setup Program that allows users to modify the basic system configuration. This type of information is stored in battery-backed CMOS RAM so that it retains the Setup information when the power is turned off

4.1 Entering Setup

Power On the Computer, and then pressing <Del> key immediately will allow you to enter Setup.

If the message disappears before you respond and you still wish to enter Setup, restart the system to try again by turning it OFF then ON or pressing the "RESET" bottom on the system case. You may also restart by simultaneously press <Ctrl>, <Alt>, and <Del> keys.

4.2 Control Keys

Up arrow	Move to previous item.
Down arrow	Move to next item.
Left arrow	Move to the item in the left hand.
Right arrow	Move to the item in the Right hand.
Esc Key	Main Menu - Quit and not save changes into CMOS Status Page Setup Menu and Option Page Setup Menu-Exit Current page and return to Main Menu.
PgUp Key	Increase the numeric value or make changes.
PgDn Key	Decrease the numeric value or make changes.
F1 Key	General help, only for Status Page Setup Menu and Option Page Setup Menu
F2 Key	Reserved
F3 Key	Reserved
F4 Key	Reserved
F5 Key	Restore the previous CMOS values from CMOS, only for Option Page Setup Menu
F6 Key	Load the default CMOS value from Fail-Safe default table, Only for Option Page Setup Menu
F7 Key	Load Optimized defaults
F8 Key	Reserved
F9 Key	Reserved
F10 Key	Save all the CMOS changes and exit

4.3 Getting help

4.3.1 Main Menu

The on-line description of the highlighted setup function is displayed at the bottom of the screen

4.3.2 Status Page Setup Menu/Option Page Setup Menu

Press F1 Key to pop up a small help window that describes the appropriate keys to use and the possible selections for the highlighted item. To exit the Help Window press <ESC> Key.

4.4 The Main Menu

Once you enter Award BIOS CMOS Setup Utility, the Main Menu(Figure 4.1) will appear on the screen. The Main Menu allows you to select from nine setup functions and two exit choice. Use arrow keys to select among the items and press <Enter> Key to accept or the sub-menu.

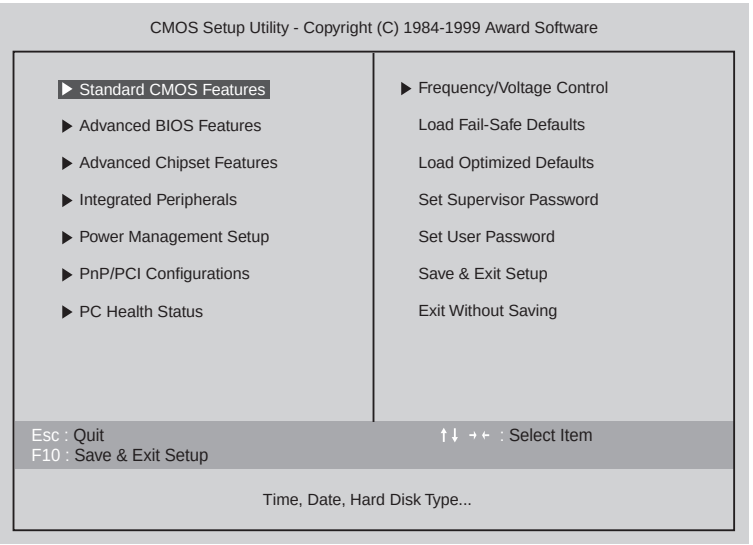

- **Standard CMOS Features**
  This setup page includes all the items in standard compatible BIOS.
- **Advanced BIOS Features**
  This setup page includes all the items of Award special enhanced features.
- **Advanced Chipset Features**
  This setup page includes all the items of chipset special features.
- **Integrated Peripherals**
  This setup page includes all onboard peripherals
- **Power Management Setup**
  This setup page includes all the items of Green function features.

- **PnP/PCI Configuration**
  This setup page includes all the configurations of PCI & PnP ISA resources.
- **PC Health Status**
  This setup page includes the system auto detect temperature, voltage, fan, speed.
- **Frequency/Voltage Control**
  This setup page includes control CPU's clock and frequency ratio.
- **Load Fail Safe Defaults**
  Fail-Safe Defaults indicates the value of the system parameters which the system would be in safe configuration.
- **Load Optimized Defaults**
  Optimized Defaults indicates the value of the system parameters which the system would be in best performance configuration.
- **Set Supervisor password**
  Change, set, or disable password. It allows out limit access to the system and Setup, or just to Setup.
- **Set User password**
  Change set, or disable password. It allows you to limit access to the system.
- **Save & Exit Setup**
  Save CMOS value setting to CMOS and exit setup.
- **Exit Without Saving**
  Abandon CMOS Vale changes and exit setup.

4.5 Standard CMOS Features Menu

The items in Standard CMOS Setup Menu (Figure 4.2) are divided into 9 categories. Each category includes no, one or more than one setup items.
Use the arrows to highlight the item and then use the <PgUp> or <PgDn> keys to select the value you want on each item.

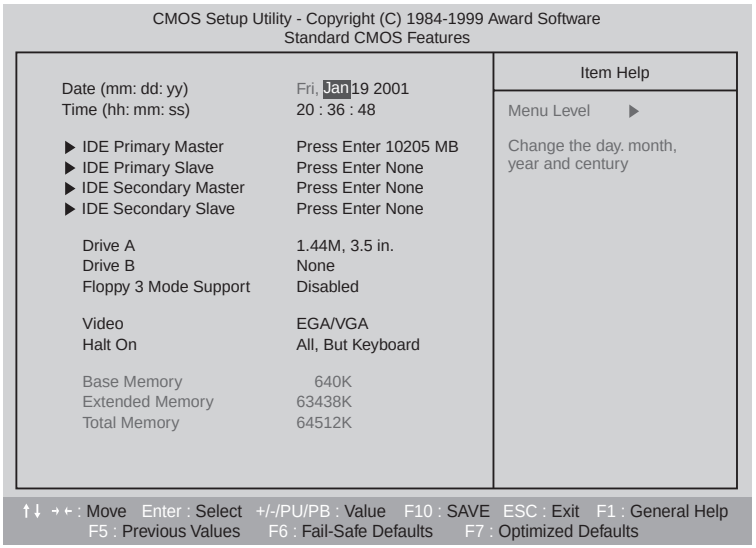

- **Date**
  The date formats is <week>, <month> <day> <year>

Week	The week, from Sun to Sat, determined by the BIOS and is Display-only
month	The month, Jan. Though Dec
day	The day, from 1 to 31 (or the maximum allowed in the month
year	The year, from 1994 through 2079

- **Time**
  The times format in <hour> <minute> <second>. The time is calculates base on the 24-hour military-time clock. For example, 1 p.m. is 13:00:00.

- **IDE Primary Master, Slave / Secondary Master, Slave**
  The category identifies the types of hand disk form drive C to F that has been installed in the computer.
  There are three types: auto type, manual definable type and none type user type is user-definable; Auto type which will automatically detect HDD type.

  Note that the specifications of your drive must be matched with the driver table. The hard disk will not work properly if you enter improper information for this category.

  If you select Manual type, related information will be asked to enter to the following items.
  Enter the information directly from the keyboard and press<ENTER> key.
  Such information should be provided in the documentation form our hard disk vendor or the system manufacturer.

CYLS	Number of cylinders
HEADR	number of heads
PRECOMP	write precomp
LANDZONE	Landing Zone
SECTORS	number of sectors

 # a hard disk has not been installed select NONE and press < Enter > Key

- **Drive A type / Drive B type**
  The category identifies the types of floppy disk driver A or driver B that has been installed in the Computer

Name	No floppy driver installed
360K, 5.25 in	5.25 inch PC-type standard driver; 360K byte capacity
1.22M, 5.25 in	5.25 inch AT-type high-density drive; 1.2M byte capacity (3.5 inch when 3 Mode is Enable)
720K, 3.5 in	3.5 inch double-side drive; 720K byte capacity
1.44M, 3.5 in	3.5 inch double-side drive; 1.44M byte capacity
2.88M, 3.5 inch	3.5 inch double-side drive; 2.88M byte capacity

- **Floppy 3 Mode Support (for Japan Area)**

Disabled	Normal Floppy Drive
Drive A	Drive A is 3 mode Floppy Drive
Drive B	Drive B is 3 mode Floppy Drive
Both	Drive A & B are mode Floppy Drive

- **Video**
  The Category detects the type of adapter used for the primary system monitor that match your video display card and monitor. Although secondary monitors are supported, you do not have to select the type in setup.

EGA\VGA	Enhanced Graphics Adapter/Video Graphics Array. For EGA, VGA, SVGA, or PGA monitor adapters
CGA 40	Color Graphics Adapter, power up in 40 column mode
CGA 80	Color Graphics Adapter, power up in 80 column mode
MONO	Monochrome adapter, includes high resolution monochrome adapters

- **Halt on**
  The category determines whether the computer will stop if an error is detected during power up.

NO Errors	The system boot will not stop for any error that may be Detected and you will be prompted
All Errors	Whenever the BIOS detects a non-fatal error the system will be stopped
All, But	The system boot will not stop for a keyboard error,
Keyboard (Default)	stop for all other errors
All, But	The system boot will not stop for a disk error;
Disk	it will stop for all other errors
All, But	The system boot will not stop for a keyboard or disk error;
Disk/key	it will stop for other error

- **Memory**
  The category is display-only which is determined by POST (Power On Self Test) of the BIOS.

Base Memory

The POST of the BIOS will determine the amount of base(or conventional) memory installed in the system.
The value of the base memory is typically 512K for systems with 512K memory installed in the motherboard, or 640K for systems with 640K or more memory installed on the motherboard.

Extended Memory

The BIOS determines how much extended memory is present during the POST. This is the amount of memory located above 1MB in the CPU's memory address map.

4.6 Advanced BIOS Features

CMOS Setup Utility - Copyright (C) 1984-1999 Award Software
Advanced BIOS Features

		Item Help
Virus Warning	Disabled	Menu Level ▶
First Boot Device	CDROM	Allows you to choose the VIRUS warning feature for IDE Hard Disk boot sector protection. If this function is emabled and someone attempt to write date into this area, BIOS will show a warning message on screen and alarm beep
Second Boot Device	Floppy	
Third Boot Device	HDD-0	
Boot Up Floppy Seek	Enabled	
Boot Up NumLock Status	On	
Typematic Rate Setting	Disabled	
Typematic Rate [Chars/Sec]	6	
Typematic Delay [Msec]	250	
Security Option	Setup	
HDD S.M.A.R.T. Capabillity	Disabled	
Report No FDD For WIN 95	No	

↑↓ →← : Move Enter : Select +/-/PU/PB : Value F10 : SAVE ESC : Exit F1 : General Help
F5 : Previous Values F6 : Fail-Safe Defaults F7 : Optimized Defaults

- **Virus Warning**
  If it is set to enable, the category will flash on the screen when there is any attempt to write to the boot Sector or partition table of the hard disk driver. The system will halt and the following error message will appear in the mean time.
  You can run anti-virus program to locate the problem.

Enable	Activate automatically when the system boots up causing a Warning message to appear when anything attempts to Access the boot sector or hard disk partition table
Disable	No warning message to appear when anything attempts to Access the boot sector or hard disk partition table

- **First / Second / Third Boot device**
  The default value is floppy / HDD-0 / LS120

Floppy	Select your boot device priority by Floppy
LS120	Select your boot device priority by LS120
HDD-0~3	Select your boot device priority by HDD-0~3
SCSI	Select your boot device priority by SCSI
CDROM	Select your boot device priority by CDROM
ZIP100	Select your boot device priority by ZIP100
DISABLE	Disable this function
LAN	Select your boot device priority by LAN

- **Boot Up Floppy Seek**
  During POST, BIOS will determine the floppy disk drive installed is 40 or 80 Tracks. 360K type is 40 tracks 720K, 1.2M and 1.44M are all 80 tracks.
  The default value is Enable.

Enable	BIOS searches for floppy disk drive to determine it is 40 or 80 tracks. Note that BIOS can not tell from 720K, 1.2M or 1.44M drive type as they are all 80 tracks
DISABLE	BIOS will not search for the type of floppy disk drive by track Number. Note that there will not be any warning message if The drive installed is 360K

- **Boot Up NumLock Status**
  The default value is On

ON	Keypad is number keys
Off	Keypad is arrow keys

- Typematic Rate Setting
  The default value is Disabled

Enabled	Enable Keyboard Typematic rate setting.
Disable	Disable Keyboard Typematic rate setting.

- **Typematic Rate (Chars / Sec)**
  The default value is 6

6-30	Set the maximum Typematic rate from 6 chars. Per second to 30 characters. Per second

- **Typematic Delay (Msec)**
  The default value is 250

250-1000	Set the time delay from first key to repeat the same key in to computer

- **Security Option**
  This category allows you to limit access to the system and Setup, or just to Setup. The default value is setup.

System	The can not boot and can not access to Setup page Will be denied if the current password is not entered at The prompt
Setup	The system will boot, but access to setup will be denied if the correct password is not entered at the prompt

- **HDD S.M.A.R.T. Capability**
  The default value is Disable

Enable	Enable HDD S.M.A.R.T. Capability
Disable	Disable HDD S.M.A.R.T. Capability

- **Report No FDD For WIN95**
  The default value us No.

No	Assign IRQ6 For FDD
Yes	FDD Detect IRQ6 Automatically

4.7 Advanced Chipset Features

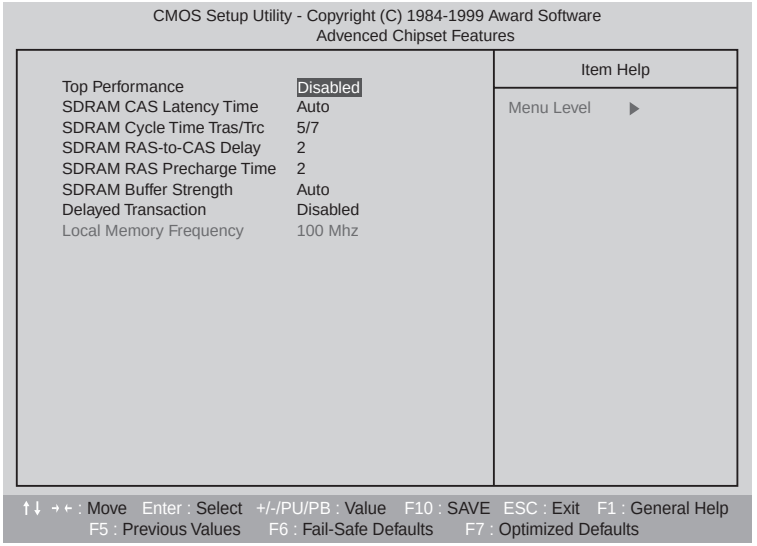

- **Top Peformance**
  The default value is Disabled

Disable	Set Top Performance Disable.
Enable	Set Top Performance Enable.

- **SDRAM CAS latency Time**

3	For 67/83 MHz SDRAM DIMM module I
2	For 100 MHz SDRAM DIMM module.
Auto	Set SDRAM CAS latency Time to Auto

- **SDRAM Cycle Time Tras/Trc**
  The default value is 5/7

6/8	Set DRAM Tras/Trc Cycle time is 6/8 SCLKs
5/7	Set DRAM Tras/Trc Cycle time is 5/7 SCLKs

- **SDRAM RAS-to CAS delay**
  The default value is 2

3	Set SDRAM RAS-to-CAS delay 3 SCLKs
2	Set SDRAM RAS-to-CAS delay 2 SCLKs

- **SDRAM RAS Precharge**
  The default value is 2

3	Set SDRAM RAS Precharge is 3
2	Set SDRAM RAS Precharge is 2

- **SDRAM Buffer Strengh**
  The default value is Auto

Auto	Set SDRAM Buffer Strengh Auto
Auto-1	Set SDRAM Buffer Strengh Auto-1
Auto+1	Set SDRAM Buffer Strengh Auto+1

- **Delayed Transaction**
  The default value is Disabled

Disabled	Normal operation.
Enable	For slow speed ISA device in system

- **Local Memory Frequency**
  The default value is 100MHz

100MHz	Set Local Memory Frequency to 100MHz
133MHz	Set Local Memory Frequency to 133MHz

4.8 Integrated Peripherals

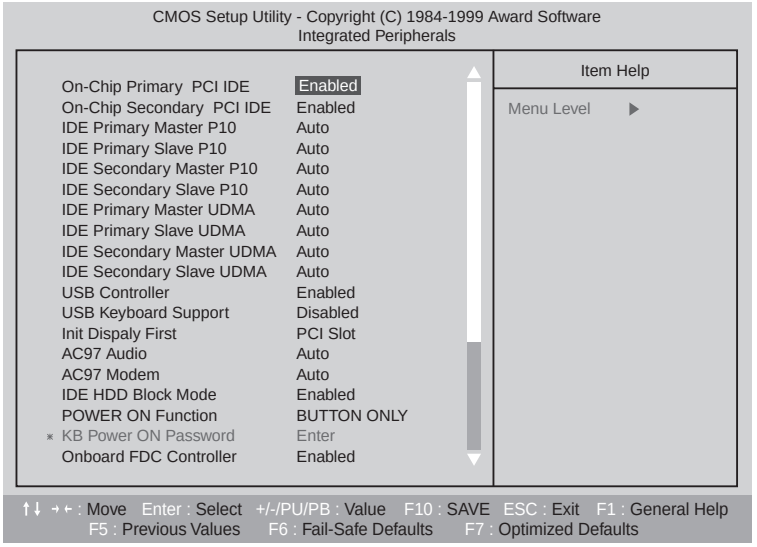

- **On-Chip Primary PCI IDE**
  The default value is Enabled.

Enabled	Enable onboard 1st channel IDE port
Disabled	Disable onboard 1st channel IDE port.

- **On-Chip Secondary PCI IDE**
  The default value is Enabled.

Enabled	Enable onboard 2nd channel IDE port
Disable	Disable onboard 2nd channel IDE port

- **IDE Primary Master PIO (for Onboard IDE 1st channel)**
  The default value is Auto

Auto	BIOS will automatically detect the IDE HDD Accessing mode
Mode0~4	Manually set the DE Accessing mode.

- **IDE Primary Slave PIO (for Onboard IDE 1st channel)**
  The default value is Auto

Auto	BIOS will automatically detect the IDE HDD Accessing mode
Mode0~4	Manually set the DE Accessing mode.

- **IDE Secondary Master PIO (for Onboard IDE 2nd channel)**
  The default value is Auto

Auto	BIOS will automatically detect the IDE HDD Accessing mode
Mode0~4	Manually set the DE Accessing mode.

- **IDE Secondary Slave PIO (for Onboard IDE 2nd channel)**
  The default value is Auto

Auto	BIOS will automatically detect the IDE HDD Accessing mode
Mode0~4	Manually set the DE Accessing mode.

- **IDE Primary Master UDMA**
  The default value is Auto

Auto	BIOS will automatically detect the IDE HDD Accessing mode
Disable	Disable UDMA function.

- **IDE Primary Slaver UDMA**
  The default value is Auto

Auto	BIOS will automatically detect the IDE HDD Accessing mode
Disable	Disable UDMA function.

- **IDE Secondary Master UDMA**
  The default value is Auto

Auto	BIOS will automatically detect the IDE HDD Accessing mode
Disable	Disable UDMA function.

- **IDE Secondary Slaver UDMA**
  The default value is Auto

Auto	BIOS will automatically detect the IDE HDD Accessing mode
Disable	Disable UDMA function.

- **USB Controller**
  The default value is Enabled.

Enable	Enable USB Controller
Disable	Disable USB Controller

- **USB Keyboard Support**
  The default value is Disable.

Enable	Enable USB Keyboard Support
Disable	Disable USB Keyboard Support

- **Init Display First**
  The default value is PCI Slot.

PCI Slot	Set Init Display First PCI Slot
Onboard	Set Init Display First to onboard AGP

- **AC'97 Audio**
  The default value is Audio

Enable	Enable AC'97 Audio
Disable	Disable AC'97 Audio
Auto	Set AC'97 Audio to Auto

- **AC'97 Modem**
  The default value is Auto

Enable	Enable AC'97 Modem.
Disable	Disable AC'97 Modem
Auto	Set AC'97 Modem to Auto.

- **IDE HDD Block Mode**
  The default value is Enable

Enable	Enable IDE HDD Block Mode
Disable	Disable IDE HDD Block Mode.

- **Onboard FDC Controller**
  The default value is Enable

Enable	Enable onboard FDC port
Disable	Disable onboard FDC port

- **Onboard Serial Port 1**
  The default value is Auto

Auto	BIOS will automatically setup the port 2 address
3F8/IRQ4	Enable onboard Serial port 2 and address is 3F8
2F8/IRQ3	Enable onboard Serial port 2 and address is 2F8
3E8/IRQ4	Enable onboard Serial port 2 and address is 3E8
2E8/IRQ3	Enable onboard Serial port 2 and address is 2E8
Disabled	Disable onboard Serial port 2

- **UART Mode Select**
  (This item allow you to determine which infra Red(IR) function of Onboard I/O chip)
  The default value is Normal

ASKIR	Onboard I/O chip supports ASKIR
IrDA	Onboard I/O chip supports IrDA
Normal	Onboard I/O chip supports Normal

- **RxD, TxD Active**
  The default value is Hi,Lo

Hi, Hi	RxD set Hi, TxD set Hi
Hi, Lo	RxD set Hi TxD set Lo
Lo, Hi	RxD set Lo, TxD set Hi
Lo, Lo	Rxd set Lo, TxD set Lo

- **IR Transmission delay**
  The default value is Enabled.

Enabled	Set IR Transmission delay Enabled
Disable	Set IR Transmission delay Disable

- **Onboard Parallel port**
  The default value is 378/IRQ7

378/IRQ7	Enable onboard LPT port and address is 378/IRQ7
278/IRQ5	Enable onboard LPT port and address is 278/IRQ5
Disable	Disable onboard LPT port
3BC/IRQ7	Enable onboard LPT port and address is 3BC/IRQ7

- **Parallel port Mode**
  The default value is SPP

SPP	Using Parallel port Standard Parallel Port
EPP	Using Parallel port Enhanced Parallel Port
ECP	Using Parallel port Extended Capabilities port
ECP + EPP	Using Parallel Port as ECP & EPP mode

- **EPP Version**
  The default value is 1.7

EPP 1.9	EPP Version is 1.9.
EPP 1.7	EPP Version is 1.7.

- **Game Port Address**
  The default value is 201

Disabled	Disabled On Board IDE
201	Set onboard game port is 201.
209	Set onboard game port is 209.

- **Midi Port Address**
  The default value is 330

Disabled	Disabled On Board Midi Port
300	Set On Board Midi Port is 300
330	Set On Board Midi Port is 330

- **Midi Port IRQ**
  The default value is 10.

5	Set 5 for Midi Port IRQ
10	Set 10 For Midi Port IRQ

4.9 Power Management Setup

```
CMOS Setup Utility - Copyright (C) 1984-1999 Award Software
Power Management Setup

ACPI Suspend Type          S1(PowerOn Suspend)      Item Help
Video Off Method           DPMS                     Menu Level ▶
Video Off IN Suspend       Yes
Suspend type               Stop Grant
MODEM Use IRQ              4
Suspend Mode               Disabled
HDD Power Down             Disabled
Soft-Off by PWR-BTTN       Instant-Off
Power LED in Suspend       Blinking
AC BACK Function           Memory
Wake-Up By PCI Card        Enabled
ModemRingOn/WakeOnLan      Enabled
FAN Off In Suspend         Enabled
USB KB/Mouse Wake From S3  Disabled
CPU Thermal-Throttling     50.0%
Resume by Alarm            Disabled
* Date(of Month) Alarm     0
* Time(hh:mm:ss) Alarm     0    0    0

↑↓ →← : Move  Enter : Select  +/-/PU/PB : Value  F10 : SAVE  ESC : Exit  F1 : General Help
F5 : Previous Values  F6 : Fail-Safe Defaults  F7 : Optimized Defaults
```

- **Video off Method**
  The default value DPMS

V/H SYNC+Blank	BIOS will turn off V/H-SYNC when gets into Green Mode for Green monitor power saving
Blank Screen	BIOS will only black monitor when gets into Green Mode
DPMS	BIOS will use DPMS| Standard to control VGA card (The Green type VGA card will turn off V/H-SYNC automatically

- **Video off In Suspend**
  The default value is Yes

Yes	Enabled Video off in suspend.
No	Disable Video off in suspend.

- **Suspend Type**
  The default value is Stop Grant

Stop Grant	Set Suspend type is stop grant
PwrOn Suspend	Set Suspend type is Power on suspend.

- **MODEM Use IRQ**
  The default value is 4

NA	Set Modem Use IRQ to NA
3	Set Modem Use IRQ to 3
4	Set Modem Use IRQ to 4
5	Set Modem Use IRQ to 5
7	Set Modem Use IRQ to 7
9	Set Modem Use IRQ to 9
10	Set Modem Use IRQ to 10
11	Set Modem Use IRQ to 11

- **Suspend Mode**
  The default value is Disable

Disable	Disable SuspendModem Use IRQ to NA
1 min-1 Hour	Setup the timer to enter Suspend Mode

- **HDD Power Down**
  The default value is Disable

Disable	Disable SuspendModem Use IRQ to NA
1-15 mins	Enable HDD Power Down mode between 1 to 15 mins

- **Soft-off by PWR-BTTN**
  The default value is Instant-off

Instant	Soft switch ON/OFF for POWER ON/OFF
Delay 4 Sec	Soft switch ON 4 sec. For POWER OFF

- **Power LED in Suspend**
  The default value is Blinking

Blinking	Set Power LED in Suspend at Blinking mode
ON	Set Power LED in Suspend at On mode
Off/Dual	Set Power LED in Suspend at Off/Dual color mode

- **AC Back Function**
  The default value is Memory

Memory	This function depends n computer status
Soft-Off	Set System Soft-off Status
Full-On	Set System Full-On Status

- **Wake-Up By PCI card**
  The default value is Enabled

Disable	Disable this function
Enable	Enable wake-up by PCI card

- **Modem Ring On / Wake On Lan**
  The default value is Enabled.

Disabled	Disable these functions
Enable	Enable these functions.

- **FAN Off In Suspend**
  The default value is Enable

Disable	Disable this function
Enable	Stop CPU FAN when entering Suspend mode

- **CPU Thermal-Throttling**
  The default value is Enable

87.5%	Monitor CPU Temp. will cause system slow down CPU Duty Cycle to 87.5%
75.0%	Monitor CPU Temp. will cause system slow down CPU Duty Cycle to 75.0%
62.5%	Monitor CPU Temp. will cause system slow down CPU Duty Cycle to 62.5%
50.0%	Monitor CPU Temp. will cause system slow down CPU Duty Cycle to 50.0%
37.5%	Monitor CPU Temp. will cause system slow down CPU Duty Cycle to 37.5%
25.0%	Monitor CPU Temp. will cause system slow down CPU Duty Cycle to 25.0%
12.5%	Monitor CPU Temp. will cause system slow down CPU Duty Cycle to 12.5%

- **Resume by Alarm**
  The default value is Disabled

Disable	Disable this function
Enabled	Enable alarm function to POWER ON system

IF the default value is Enabled

Data (of Month) Alarm	0-31
Time (hh:mm:ss) Alarm	(0-23) : (0-59) : (0-59)

- Primary IDE 0/1
  The default value is Disabled

Disable	Disable this function
Enabled	Enable monitor Primary IDE 0/1 for Green event.

- Secondary IDE 0/1
  The default value is Disabled

Disable	Disable this function
Enabled	Enable monitor Secondary IDE 0/1 for Green event.

- FDC/COM/LPT Port
  The default value is Enabled

Disable	Disable this function
Enabled	Enable monitor FDC/COM/LPT for Green event.

- PCI RIRQ [A-D] #
  The default value is Enabled

Disable	Monitor PCI PIRQ (A-D) IRQ Active
Enabled	Ignore PCI PIRT (A-D) IRQ Active

4.10 PnP/PCI Configurations

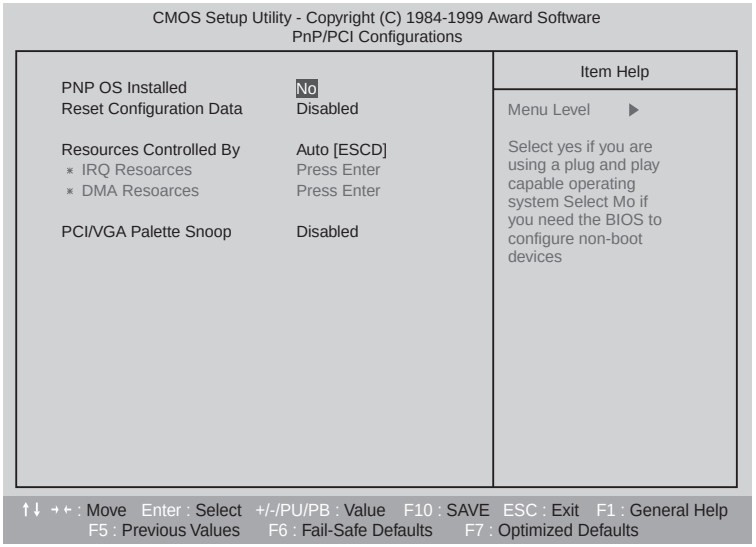

- PNP OS Installed
  The default value is No

Yes	Enable PNP OS Installed function
No	Disable PNP OS Installed function

- Reset Configuration Data
  The default value is Disable

Disable	Disable this function
ESCD	Enable clear PNP information in ESCD
DMI	Reset Configuration Data in DMI
BOTH	Reset Configuration Data DMI & ESCD

- Resources Controlled by
  The default value is Auto (ESCD)

Manual	User can set the PnP resource (I/O Address, IRQ & DMA Channels) used by legacy ISA DEVICE.
Auto	BIOS automatically use these PnP rescuers

- IRQ(3,4,5,7,9,10,11,12,14,15) DMA(0,1,3,5,6,7) assigned to
  The default value is "Legacy ISA" or "PCI/ISA PnP"

Legacy ISA	The resource is used by Legacy ISA device.
PCI/ISA PnP	BIOS automatically use these PnP rescuers.

- PCI/VGA Palette Snoop
  The default value is Disabled

Enabled	For having Video Card on ISA Bus and VGA Card on PCI Bus
Disable	For VGA Card only.

4.11 PC Health Status

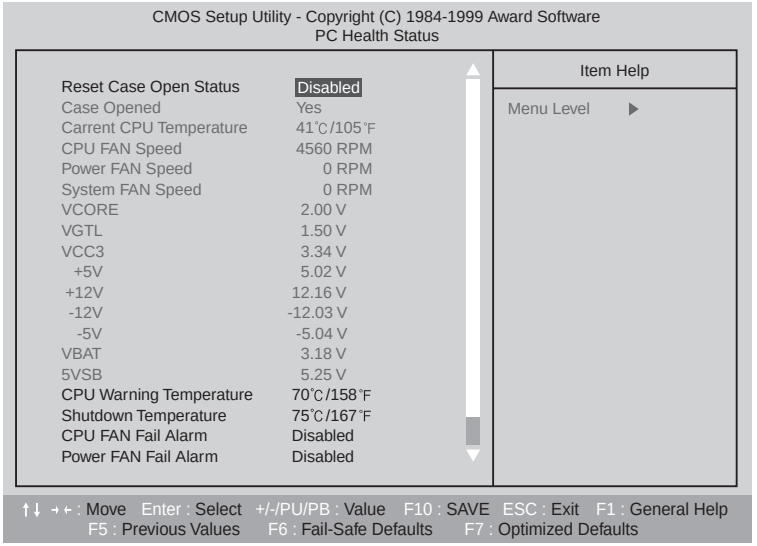

- **Reset Case Open Status**

- **Case Opened**
  If the case is closed, “Case Opened” will show “No”
  If the case have been opened “Case Opened” will show “Yes”
  If you want to reset “Case Opened” Value, set “Reset Case Open Status”
  To “Enabled” and save CMOS, your computer will restart.

- **Current CPU Temperature**
  Detect CPU Temp automatically

- **CPU FAN/Power FAN / System FAN Speed (RPM)**
  Detect FAN speed status automatically

- **Current Voltage (V) VCORE /VGTL/VCC3/+_12V/+_5V/VBAT/5VSB**
  Detect system voltage status automatically

- **CPU Warning Temperature**
  The default value is 80 C / 176 F

65c / 149F	Monitor CPU Temp. at 65C / 149F
70c / 158F	Monitor CPU Temp. at 70C / 158F
75c / 167F	Monitor CPU Temp. at 75C / 167F
80c / 176F	Monitor CPU Temp. at 80C / 176F
85c / 185F	Monitor CPU Temp. at 85C / 185F
90c / 194F	Monitor CPU Temp. at 90C / 194F
95c / 203F	Monitor CPU Temp. at 95C / 203F
Disable	Disabled this function

- **Shutdown Temp**
  (This function will be effective only for the operating system that support ACPI Function)

  The default value is 90C / 194F

Disable	Normal Operation.
65C/149F	Monitor CPU Temp at 65C/149F, if Temp.>65C/149F system will automatically power off.
70C/158F	Monitor CPU Temp at 70C/158F, if Temp.>70C/158F system will automatically power off.
75C/167F	Monitor CPU Temp at 75C/167F, if Temp.>75C/167F system will automatically power off.
80C/176F	Monitor CPU Temp at 80C/176F, if Temp.>80C/176F system will automatically power off.
85C/185F	Monitor CPU Temp at 85C/185F, if Temp.>85C/185F system will automatically power off.
90C/194F	Monitor CPU Temp at 90C/194F, if Temp.>90C/194F system will automatically power off.

- **Fan fail Alarm (CPU/Power/System)**

  The default value is Disable

Disable	Fan Fail Alarm Function Disable
Enable	Fan Fail Alarm Function Enable

4.12 Frequency/Voltage Control

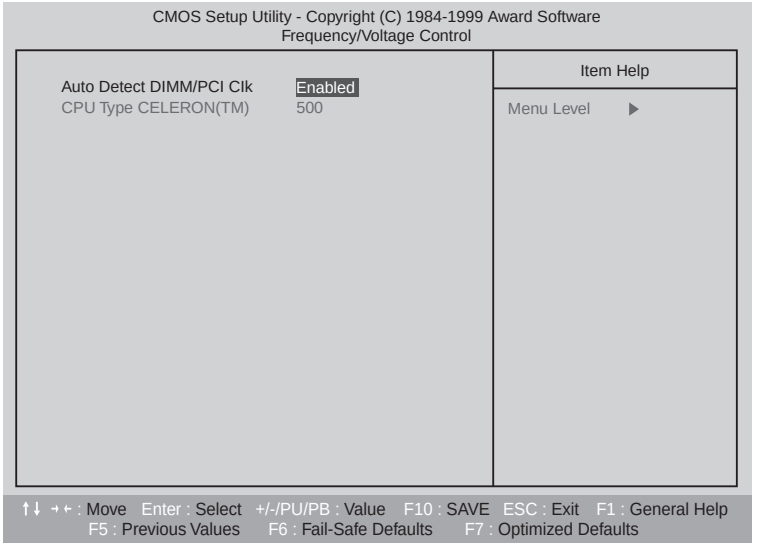

- **Auto Detect DIMM/PCI Clk**

  The default value is Enable

Disable	Disable Auto Detect DIMM/PCI Clk
Enable	Enable Auto Detect DIMM/PCI Clk

- **CPU Type CELERON (Depends on Your CPU Type)**

  1. **System Bus Speed : 66MHz**
     200/233/266/300/366/400/433/500/533
  2. **System Bus Speed : 100MHz**
     300/350/400/450/500/550/600/650/700/750/800
  3. **System Bus Speed : 133MHz**
     400/466/533/600/666/733/800/866/933/1000/1066

4.13 Load Fail-Safe Defaults

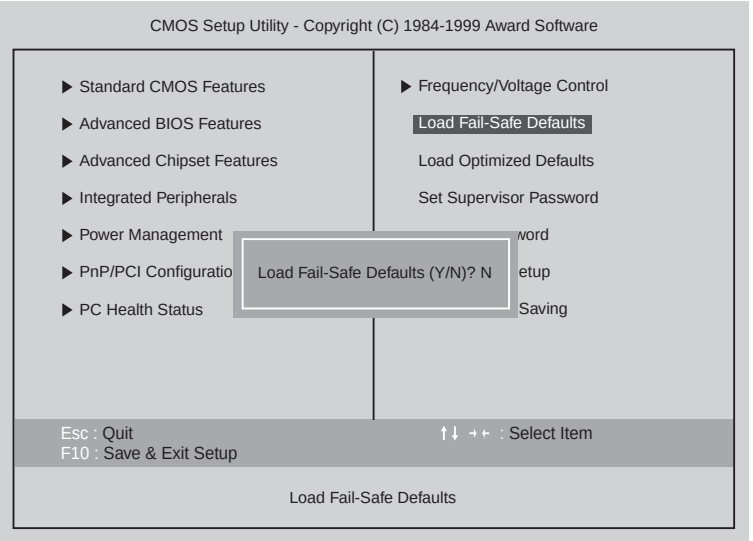

- **Load Fail-Safe Defaults**

  Fail-Safe defaults contain the most appropriate values of the system Parameters that allow minimum system performance

4.14 Load Optimized Defaults

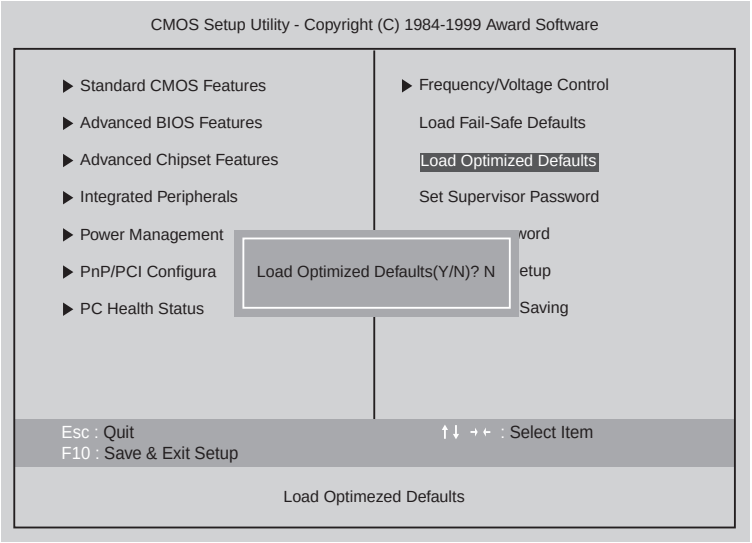

- **Load Optimized Defaults**

  Selecting this field loads the factory defaults for BIOS and Chipset features which the system automatically detects.

4.15 Set Supervisor / User Password

When you select this functions message will appear at the center of the screen to assist you in creating a password

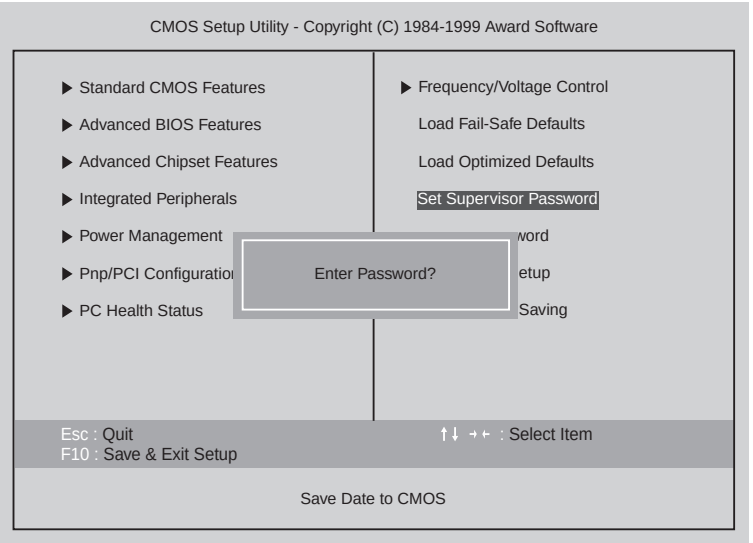

Type the password, up to eight characters, and press <Enter> key. The password typed now will clear the previous entered password from CMOS memory. You will be asked to confirm the password.
Type the password again and press <Enter> key. You may also press <ESC> key to abort the selection and not enter a password.

To disable password, just press < Enter> key when you are prompted to enter password. A Message “PASSWORD DISABLED” will appear to confirm the password being disabled.
Once the password is disabled, the system will boot and you can enter Setup freely.

If you select system at Security Option in Bios Feature Setup Menu, you will be prompted for the password every time the system is rebooted or any time you try to enter Setup Menu. If you select Setup at Security Option in BIOS Features Setup Menu, you will be prompted only when you try to enter Setup.

4.16 Save & Exit Setup

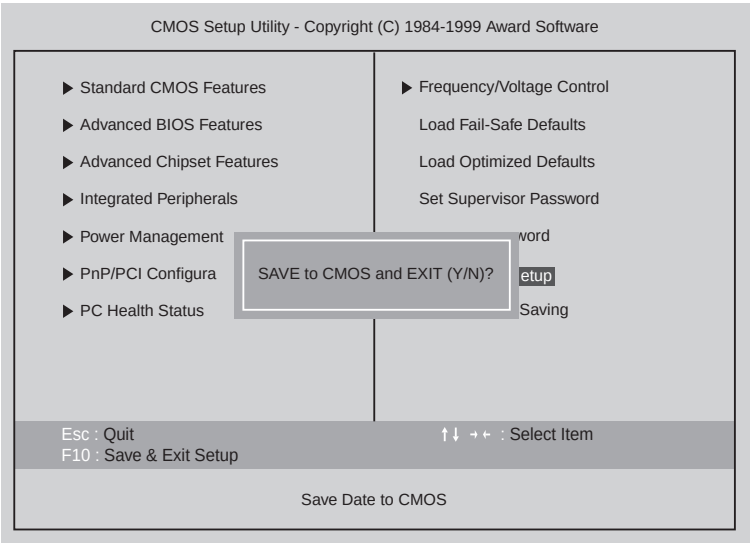

Type “Y” will quit the Setup utility and save the user setup value to RTC CMOS

Type “N” will return to setup utility.

4.17 Exit Without Saving

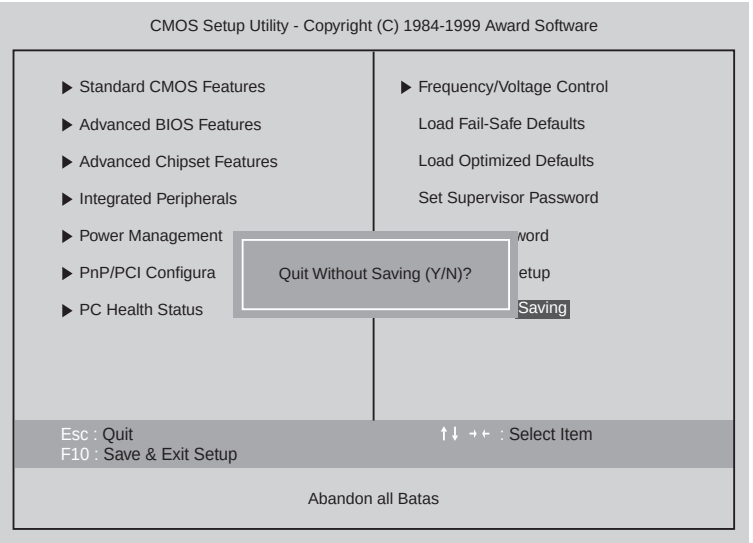

Type “Y” will quit the Setup utility without saving to RTC CMOS.

Type “N” will return to setup utility.

Blank

Chapter 5
Inside Your Computer

This chapter tells you how to remove and replace the system cover and connect the internal cables, and familiarizes you with the internal components you might handle if you install hardware options.

This chapter will be used every time you install a hardware option inside your computer.

Removing the Cover

You need to remove the cover of your system to access its internal components.

To remove the cover, follow the below steps.

1. Turn off the computer and other peripheral devices including the monitor.
2. Disconnect all the cables include power cable from the computer.
3. To open the system cover, remove the one screw on the back panel of your computer.

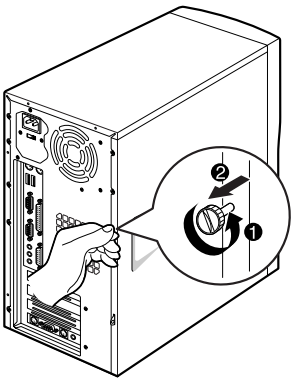

4. Slide the cover toward the rear to free it from the system and lift it off until can be removed completely. Set the cover aside.

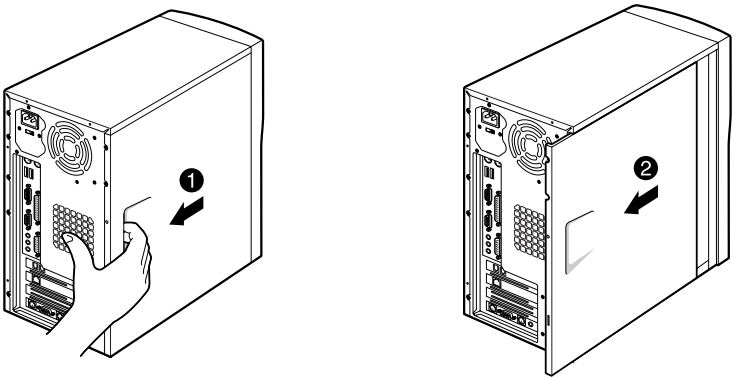

NOTE

Be sure to ground yourself by touching your system every time you remove the cover. If you are not properly grounded, you could generate an electric shock when you touch a component.

Replacing the Cover

Follow the below steps to replace the cover.

1. Hold the cover with your hands and gently put it down to the chassis on the rear position (about 3cm) from the front bezel, then push it to the front.

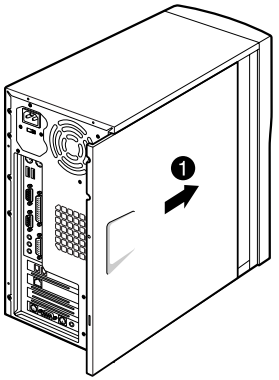

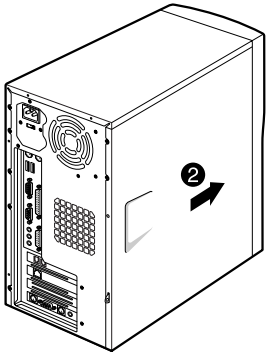

2. Tighten the cover to the chassis with the screws you removed.

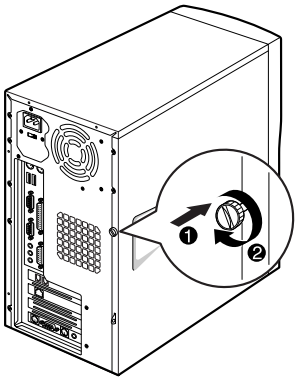

3. Reconnect the monitor, keyboard, mouse, and any other peripheral device's cable connectors to your system.
   Reconnect all the device's cable connectors to your system.

Internal Components

The following picture shows the components in your system.

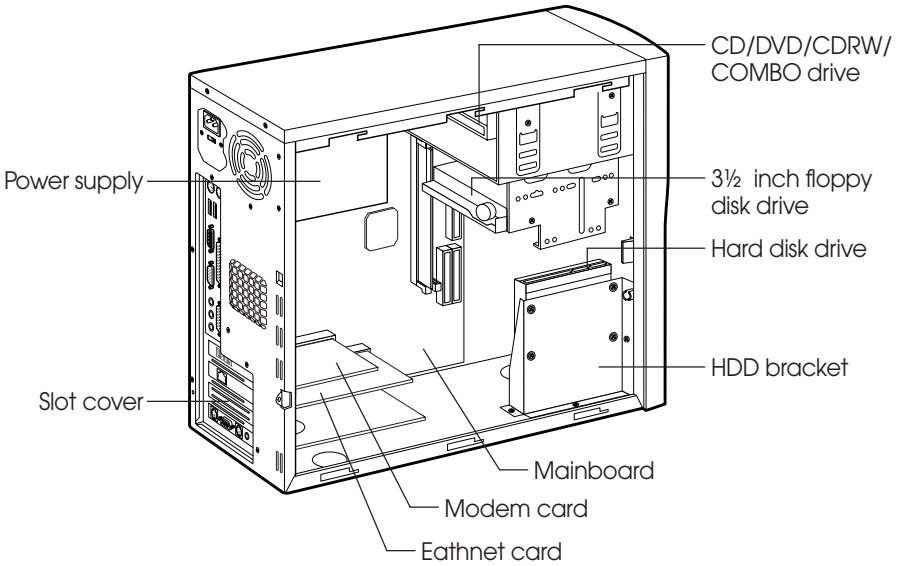

Your computer has three (one 3.5-inch and two 5.25-inch) horizontal bays in the drive cage and the HDD bracket for one hard disk drive.

Mainboard Overview

The following picture shows the locations of the mainboard components in your computer.

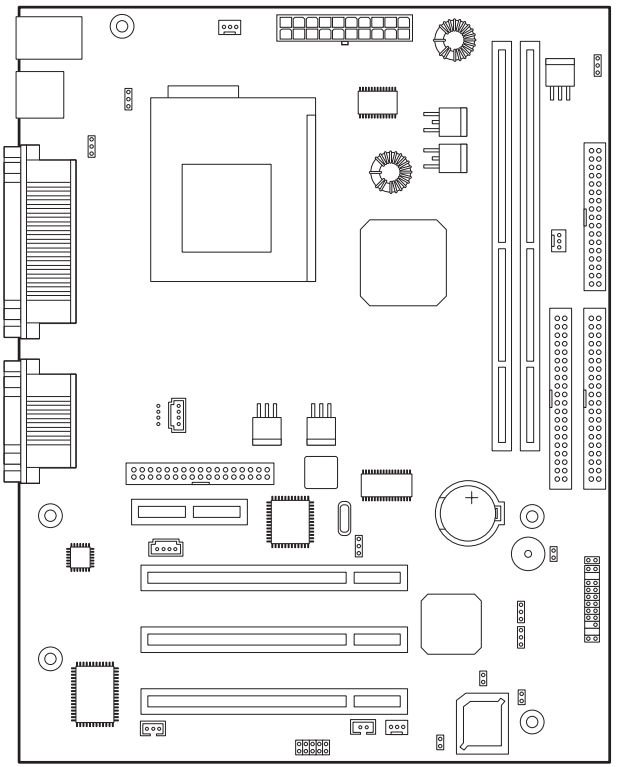

NOTE

The mainboard's components may vary and look slightly different.

Changing the Jumpers

The jumpers are small electrical connectors that control various circuits or functions in your system.

Jumpers are small blocks on a circuit board with two or more pins emerging from them. To change a jumper setting, pull the plug off its pins and carefully fit it down onto the pins indicated.

The jumpers settings in your computer are preset at the factory; however, you can alter the functions by changing the standard settings:

- Enable or disable the password function.
- Clear the CMOS settings.
- Enable or disable the FDD write protect.
- Enable or disable the built-in display function.

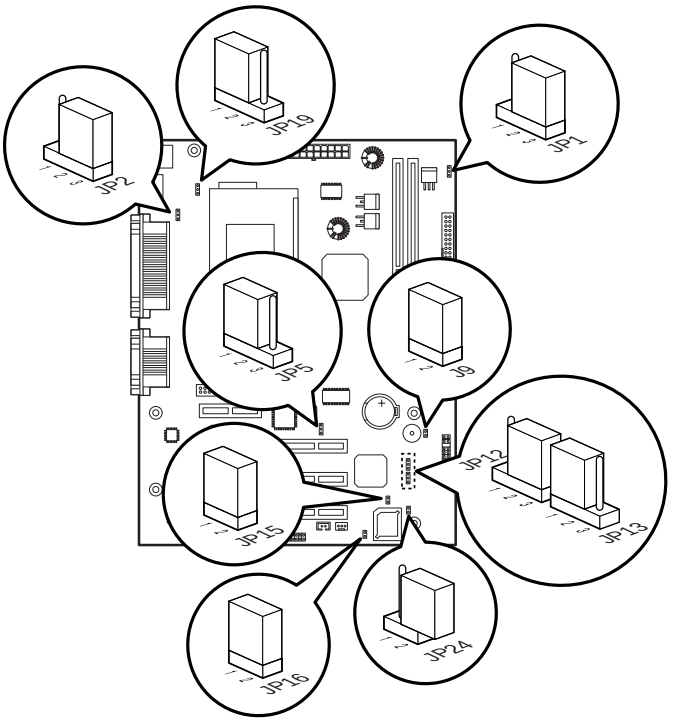

NOTE

The jumpers settings and their functions are inscribed on the label attached in your system chassis. If you want to see the label, you need to remove the cover of your system.

CAUTION

Do not change the jumpers with the power on. Always turn off the computer and unplug the power cord from the computer before changing the jumpers.

Connecting a Power Supply Connector

The power supply converts AC power to the DC voltage your computer needs. The power supply has one big connector for mainboard and some other connectors for devices such as hard disk, CD/DVD ROM, floppy disk drive, and etc in your computer.

The cable of power supply having a big connector is connected to the power port on the mainboard.

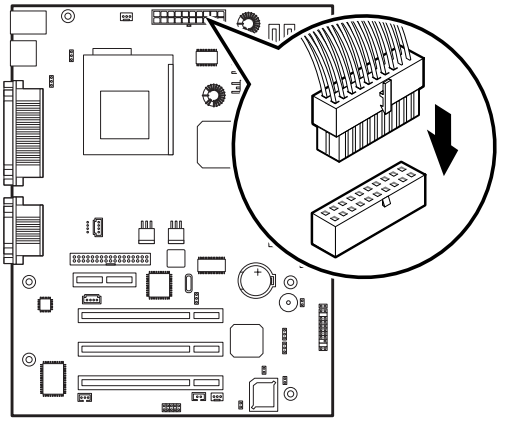

Connecting the Front Panel Connector Cable

The front panel connector cable is connected to connectors on the mainboard and front panel of your computer.

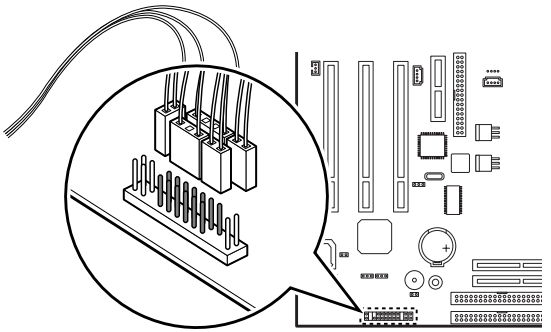

Chapter 6
Installing and Removing Board Options and Drives

This chapter describes how to install and remove optional drives and board options in your computer. You can use these instructions to install and remove a variety of devices and board options. Although your board options and drives may look a bit different from the ones illustrated here, you can install and remove it the same way. See Chapter 5 for removing and replacing the cover.

NOTE

Turn off the computer. Then disconnect the computer from its power source and from any telecommunications links, networks, or modems before performing any of the procedures described in this chapter.

Installing an Expansion Card

This section explains how to install an expansion card in your computer. Your computer has three 32-bit PCI and one AMR connectors.

Follow the below steps to install an expansion card.

1. Remove the system cover according to the instructions in "Removing the Cover" in Chapter 5.
2. Insert a flat blade screwdriver into a hole of the slot cover you wish to remove.

3. Move the screwdriver up and down until the slot cover breaks away from the chassis. Then lift the slot cover out of the chassis

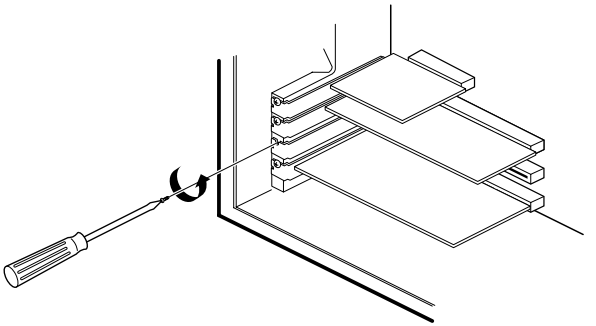

4. If there is any switches or jumpers on the expansion card, adjust them. When you handle the card, be careful not to touch any components or the gold edged connector.

   Push the expansion card connector in firmly to the connector on the mainboard. The expansion

5. card connector must be fully inserted in the connector on the mainboard.

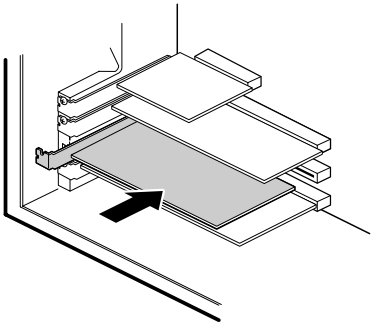

6. Secure the card with retaining screw to the computer.

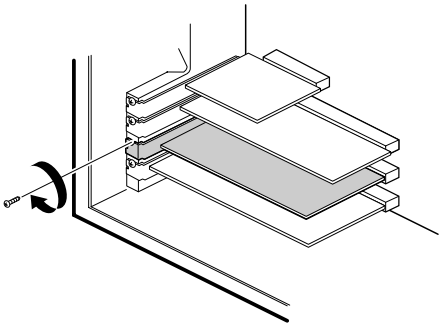

7. Connect any cables if the expansion card has.
8. Replace the system cover according to the instructions in "Replacing the Cover" in Chapter 5.

Installing and Removing Memory Modules

Your computer may have come with one memory module inserted into the mainboard.

You can add a DIMM with the capacity of 16MB, 32MB, 64MB, or 128MB. You can increase the amount of memory in your computer up to 256MB.

Each DIMM socket supports the following memory features:

- Unbuffered 168-pin 3.3 V DIMMs with gold-plated contacts
- SDRAM
- Single or double-sided DIMMs in the following sizes:

DIMM size	Non-ECC memory
16MB	2 Mbit * 64bit
32MB	4 Mbit * 64bit
64MB	8 Mbit * 64bit
128MB	16 Mbit * 64bit
256MB	32 Mbit * 64bit
512MB	64 Mbit * 64bit

Installing a Memory Module

Follow the below steps to install DIMMs.

1. Remove the cover according to the instructions in "Removing the Cover" in Chapter 5.
2. Install the DIMM in the socket marked with DIMM2, if the DIMM is installed in the DIMM1 socket.

   Press the clips at each end of the socket outward until they snap open.
3. Orient a DIMM to the socket so the two notches in the DIMM connector are aligned with the crossbars in the socket.

4. Press the DIMM straight into the socket until the retaining clips snap into place around the ends of the DIMM.

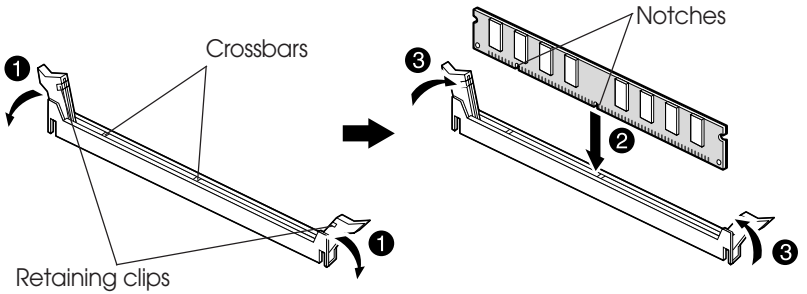

5. Replace the system cover according to the instructions in “Replacing the Cover” in Chapter 5.

Removing a Memory Module

To remove memory modules, press the retaining clips outward simultaneously until the DIMM disengages from the socket and then carefully remove the DIMM from the socket.

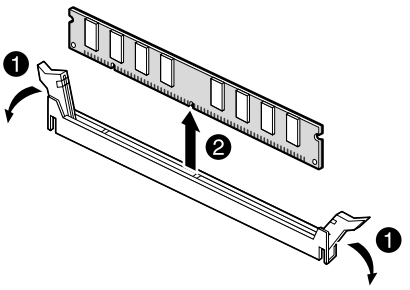

Installing and Removing the Processor

The processor that you install must be compatible with PGA370 socket.

WARNING

The processor you want to install must have heatsink to prevent overheating. If there is no heatsink, the processor and your mainboard can have serious damage by overheat.

Follow the below steps to replace the existing processor with a new one.

NOTES

According to processor type, your actual process may be slightly different from one described below.

There are two types, fan and heatsink type and heatsink type, of the processor.

1. Remove the system cover as described in "Removing the Cover" in Chapter 5.
2. See the picture in "Mainboard Overview" in Chapter 5 to figure out the location of the processor socket.
3. If there is a processor chip on the socket, you must remove it from the socket. When you remove the processor, first unplug the connector from the CPU fan connector (fan and heatsink type only) and remove the heatsink by releasing both tabs on the heatsink that secure the heatsink to the socket.

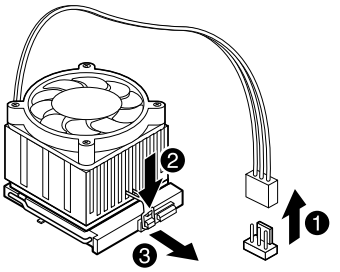

4. Pull the ZIF handle sideways away from the socket then upward to 90-degree angles and carefully pull the chip straight up from the socket.

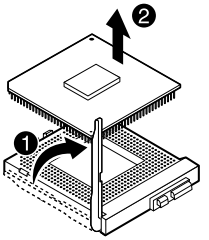

5. Locate the new processor you are installing over the socket so that the notched corner on the Processor (pin 1) can be aligned with the blank corner on the socket. Then gently push the Processor straight into the socket until its pins are completely inserted into the holes of the Socket.

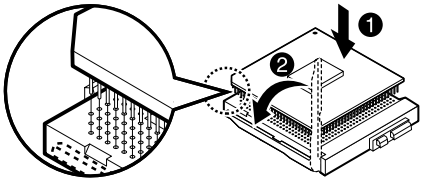

NOTE

If you install the processor chip in the wrong orientation, you may burn the chip and void your warranty.

6. Press the ZIF handle back to close it.
7. Attach the heatsink to the processor socket. If your processor is fan and heatsink type, connect a fan connector cable from the CPU fan to the CPU fan connector.

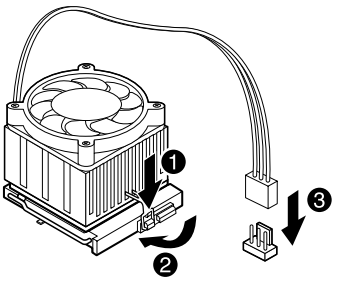

8. Replace the system cover according to the instructions in "Replacing the Cover" in Chapter 5.

Replacing a Hard Disk Drive

Your hard disk drive is installed in the HDD bracket attached on the chassis. You can install one hard disk drive in the HDD bracket.

Follow the below steps to replace the hard disk drive.

1. Remove the system cover according to the instructions in "Removing the Cover" in Chapter 5.
2. Detach all cables from the hard disk drive.
3. Remove the screw securing the HDD bracket to the computer. And then slide the HDD bracket, as shown below.

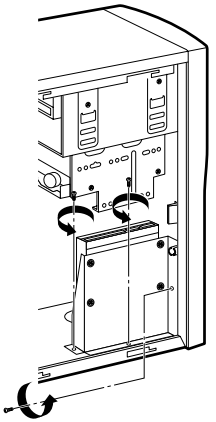

4. Remove the screws from the HDD bracket.

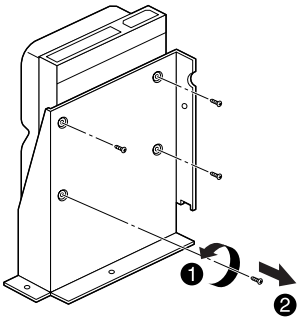

5. Set the jumper of the new hard disk drive. If you want to install only hard disk drive, the jumper setting must be master drive.
6. Using the screws, secure the hard disk drive to the HDD bracket.

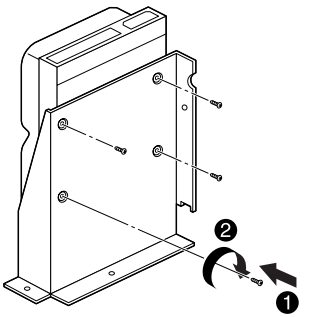

7. Slide the drive until the four slots in the HDD bracket are inserted into the four tabs of the chassis and then secure the HDD brakcet with the retaining screw, as shown below.

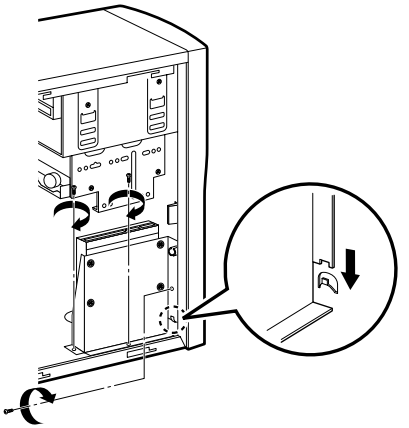

8. Connect the free power cable and hard disk drive cable to the hard disk drive.
9. If you removed the hard disk drive cable from the mainboard, replace it.
10. Replace the system cover according to the instructions in "Replacing the Cover" in Chapter 5.

Installing the 5.25-inch Device in the Peripheral Bay

Your system has two 5.25-inch horizontal peripheral bays. If only one device (e.g., CD/DVD-ROM drive) is installed in the system's 5.25-inch peripheral bay, you can add an optional device such as a CD/DVD/CDRW/COMBO drive, hard disk drive, LS-120 drive, or ZIP drive in the empty peripheral bay.

To install an optional device in the bay, follow the below steps.

1. Remove the cover according to the instructions in "Removing the Cover" in Chapter 5.
2. Remove the HDD bracket from the system chassis. For more information, see "Replacing a Hard Disk Drive" in this chapter.

NOTE

If you want to install a 3.5-inch hard disk drive, you must purchase the 5.25-inch dock or mounting bracket and attach it to your 3.5-inch hard disk drive to install your hard disk drive for the 5.25-inch bay.

3. Remove the front panel from the chassis by pressing the four tabs.

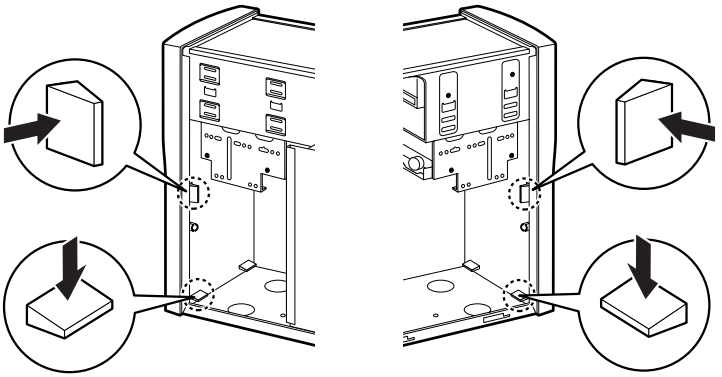

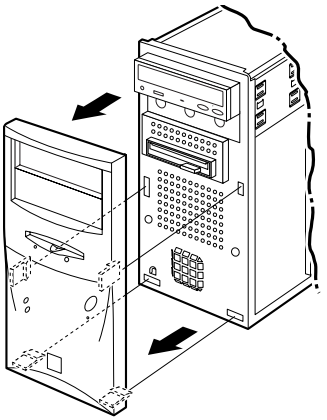

4. Remove the faceplate cover from the front panel. Pull out the faceplate, pressing outward each tab on both ends of the front panel using your finger.

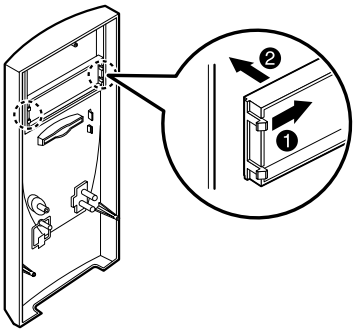

5. If there is an EMI shield that covers the 5.25-inch drive bay you want to use, remove it from the chassis using a tool such as a screwdriver.

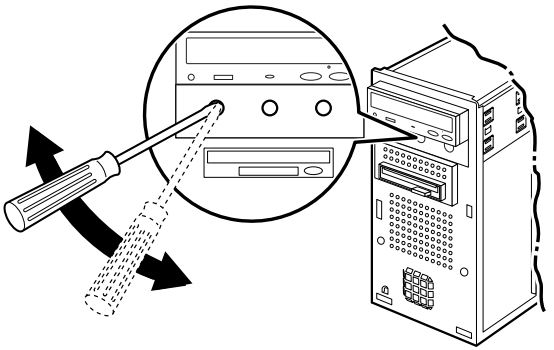

6. Make you sure that jumpers of optional drive must be set correctly.

NOTE

As a hard disk drive, most optional devices' jumpers must be set correctly to work properly with your system. For example, if there are two drives to one E-IDE interface cable, one drive must have master drive jumper setting, and the other drive must have slave drive jumper setting.

If you want to install an optional drive to the 5.25 inch bay, you must use secondary E-IDE drive connector. If your CD/DVD ROM is set to master, the optional drive's jumper must be set to slave.

7. Slide the device into the bay and secure it to the computer case with four screws.

8. Connect the power and interface cables to the device installed.

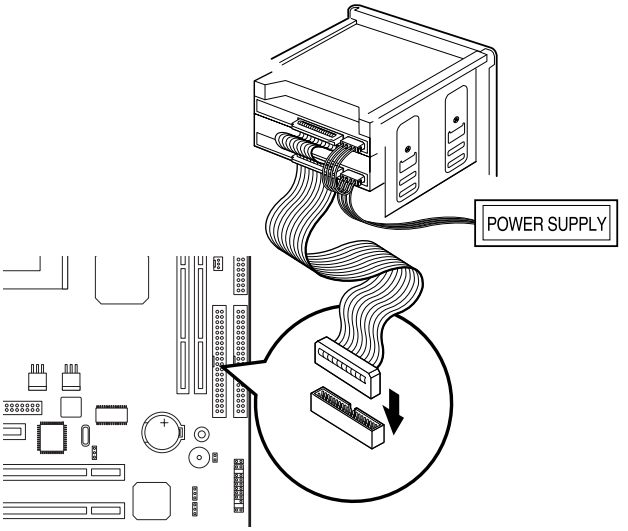

9. To reassemble the front panel to the system, press the front panel toward the system until the tabs on the front panel click into place.
10. Hook the front panel connector cable and replace the HDD bracket to the chassis.
11. Replace the system cover according to the instructions in "Replacing the Cover" in Chapter 5.

Replacing the Battery

The 3 V, coin-cell CR2032-type battery on the mainboard provides power to the real-time clock and CMOS RAM.

The battery approximately has three years lifetime when the system is off.

To replace the battery, follow the below steps.

1. Enter the Setup program and make a printed copy of the Setup screens.
2. Turn off your system and devices connected to the system.
3. Remove the system cover.
4. Take the battery out from the socket.

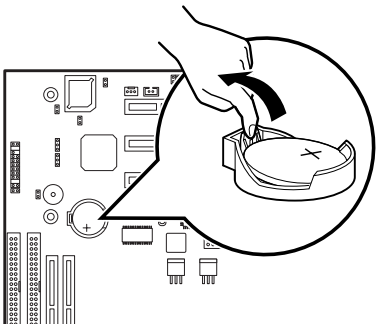

5. Insert the new battery with the "+" side facing up into the battery socket.

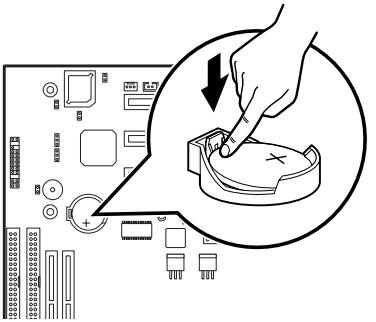

6. Replace the system cover.
7. Turn on your system, run the Setup program, and set the date and time again. Restore any system configuration information that was lost while replacing the battery according to the copy made in step 1.

After Installing Options

After you install or remove drives, if necessary, be sure to run Setup program to update the configuration of your system. See Chapter 4 for detail information.

If you installed a hard disk drive on which you want to install an operating system, install the operating system, drivers, and application programs on the hard disk drive using the Restore CD after running FDISK. Follow the instructions in Chapter 8.

If you installed a hard disk drive on which you want to install an operating system, install the operating system on the hard disk drive. See "Using the Restore CD" in Chapter 8.

If you installed new optional equipment and Windows ME is already installed in your system, you need to have Windows ME detect it. See Windows ME manual and the manual that came with your optional equipment for detail information.

Blank

Chapter 7
Application Programs

Player

NOTE

The Player is available only on the CD-ROM drive model.

The Mpeg Player is the software application designed to work with your display adapter.

The Mpeg Player supports full motion and full screen software MPEG video playback with excellent video quality.

AudioStation

AudioStation is a component audio system that can play or record audio CDs, digital audio files (WAV or VOC), or MIDI files (MID, RMI or ORC). This consists of Audio Mixer, CD Player, Digital Audio Player, and MIDI Player.

Audio Mixer lets you adjust the volumes of the various audio components and set recording levels for digital audio. You can play audio CDs with the CD Player. You can play digital audio (WAV) files with the Digital Audio Player and edit digital audio files using WinDAT displayed by pressing the Edit button. With the MIDI Player, you can play MIDI files. You can audition CD, WAV and MIDI files and create custom playlists.

To run AudioStation program, point to program Voyetra after click the Start button, and then click AudioStation.

NOTE

For more information, refer to on-line help. To see on-line help, click the icon on the AudioStation screen.

PowerDVD

NOTE

The PowerDvD is available only on the DVD,COMBO drive model.

Digital Versatile Disc (DVD) is a high-density storage device.

A standard DVD title can hold 4.7 gigabytes of data - a seven times the data capacity of a current CD title.

Dual-layer DVD title can hold more than twelve times the information of a CD title on a single side.

So you can enjoy higher-resolution pictures, more channels of digital sound, richer graphics, and far more multimedia.

Playing the PowerDVD

If your DVD disc is auto-run, the PowerDVD will automatically start when you insert the disc in the DVD-ROM drive.

For the DVD disc does not automatically start when you insert the disc, play the PwerDVD as follows:

Double-click the PowerDVD icon on the desktop and press the play button on the PowerDVD.

The Display Area

	DVD video is the current media
	Digital files are the current media
	VCD is the current media
	Audio CD is the current media
	Stereo is the current audio mode
	Dolby os the current audio mode
	4-speaker is the current audio mode
	6-speaker is the current audio mode
	SPDIF is the current audio mode
	Denotes current drive
	Denotes current subtitle
	Denotes current audio stream
	Denotes current region
	Denotes current angle
	Denotes current parental control

The Main Controls

Ctel-N	Minimizes user interface
Ctrl-X	Exits PowerDVD
Z	Zooms to full screen and to windows modes
O	Denotes file mode, Press to switch modes
Ctrl-E	Ejects discs from CD/DVD-ROM drive
F1	Accesses online help
+	Increases volume
-	Mutes volume
Q	Decreases volume
/	Menu pad used to navigate between DVD title menu selections
/	Number pad for entering numerical file or audio CD selections
N/A	Click anywhere along the slider to navigate tithing a given chapter, VCD, CD or file

The Control Wheel

1. 8X Reverse ( )
2. 4X Reverse ( )
3. 2X Reverse ( )
4. 1X Reverse ( )
5. Pause ( )
6. 1X Forward ( )
7. 2X Forward ( )
8. 4X Forward ( )
9. 8X Forward ( )

NOTE

The green point roughly marks the shuttling above.
Forward speeds of 1/2X, 1.5X, 3Xand 6X and 1/2X rewinding speed are not pictured Above but are sequentially located between their respective locations above.

Enter	Play DVD, VCD, CD or files
Space Bar	Pauses playback
S	Stops playback
N	Jumps to next chapter
P	Returns to previous chapter
Ctrl-B	Steps backward one frame
T	Steps forward one frame

The Control Panel

Hidden Control Panel

Disc Mode

File Mode

K	Switches among karaoke mode
C	Captures video content as bitmap image file
A	Switches among available angles
R	Goes ip to previous section when navigation
	DVD title menu selections
X	Sets A and B Points to repeat specific user-defined
	Scenes during playback
H	Switches among available audio streams
Ctrl+R	Repeats titles, chapters or screens
U	Switches among available subtitle during playback
L	Accesses all available menus
Ctrl+F2	Bookmarks specific scenes in DVD
F2	Directly goes to bookmarked scenes
F3	I-Power takes you to the Internet directly
Ctrl-C	Configuration setting is all located here
U	shuffles playlist in File mode

NOTE

Your PowerDVD application is already set to Region 1, so you can play the DVD disc that contains no region code or a Region 1 code.

<Region Code for Area>

Region No.	Area
Region 1	The United States, U.S. Territories and Canada.
Region 2	Europe, The Middle East, Japan and South Africa.
Region 3	Asia Pacific.
Region 4	South America and Australasia.
Region 5	Russia, Eastern Europe, Central Asia and Africa.
Region 6	China.

Blank

Chapter 8
Using the Restore CD

Use the Restore CD for the following:

- To restore all software including Windows ME.
- To restore lost or destroyed drivers or application programs.

Restoring Your Original Software

The Restore CD contains a copy of all software (e.g., Windows ME, drivers, and application programs) originally preinstalled on your hard disk. (This process may take about 20 minutes.)

There are two ways to restore the software:

- You can restore the software that came with your system without formatting the hard disk.

WARNING

You must reinstall any software not originally installed on your hard disk drive.

- You can format the hard disk and then restore all original software.

WARNING

If you format your hard disk, you lose all data that added files, programs, or other data on your hard disk since you purchased your system. If you must reinstall any software not originally installed on your hard disk and don't want to lose your personal data on your hard disk, copy it to diskettes before formatting.

follow the below steps to restore your original preinstalled software.

1. Turn on the computer.
2. Insert the Restore CD into the CD/DVD-ROM drive before your computer boots up.
3. Restoration procedures will be started.
4. When the Microsoft Windows ME Startup Menu appears, type the number 1 or 2 and press Enter.

CAUTION

If you select "1. RESTORE WINDOWS 98 - WILL FORMAT HDD," you will lose all data in the hard disk (C:).

Microsoft Windows Startup Menu

1 RESTORE WINDOWS - WILL FORMAT HDD
2 RESTORE WINDOWS - WILL NOT FORMAT HDD
3 BOOT TO DOS PROMPT FROM CD-ROM

Enter a choice : _

NOTE

To stop this restore process now, remove the Restore CD from the CD/DVD-ROM drive and restart your computer.

5. If you select “1. RESTORE WINDOWS ME - WILL FORMAT HDD,” the “Proceed with Format (Y/N)?” message will appear in the screen. To continue the procedures, type Y and press Enter.
6. All data in the Restore CD will be copied to your hard disk.
7. After the restoration process is completed, remove the Restore CD from your CD/DVD/CDRW/COMBO drive.
8. Press Enter to restart your computer.

NOTE

If the Restore CD is in the CD/DVD-ROM drive while your computer is booting, the computer will be booted with the Restore CD. In this case, the "Microsoft Windows ME Startup Menu" menu will appear. To continue the restoration, remove the Restore CD from your CD/DVD-ROM drive and restart the computer.

9. Windows ME starts and the registration program runs.
10. To register with Microsoft for using your computer, follow the displayed messages. Enter your personal information and the Windows ME Product Key (attached on the Windows 98 manual).

Installing Drivers or Application Programs

If you lose a driver or application program, install it by using the Restore CD that came with your system.

follow the below steps to install drivers or application programs.

1. Insert the Restore CD into the CD/DVD/CDRW/COMBO drive when Windows ME is started.
2. Double-click the My Computer icon on the desktop.
3. Double-click the CD-ROM icon in the My Computer window.
4. Double click the SETUP.EXE icon in CD ROM folder to start the Driver & Software installation program.
5. Click a driver or application program menu to install or copy to your system. Also you can see all directories in the Restore CD by clicking the Browse this CD menu.

   NOTE

   If you move the mouse pointer to a menu title in the installation program window, the color of the menu will be changed.

6. Follow the instructions on the screen.

Blank

Appendix A
Specifications

Feature	Specifications
Processor	• Intel Celeron processor in a PPGA package • Intel Pentium III processor in a PPGA package • 66/100/133 MHz bus speed • Auto Detect CPU Voltage.
Memory	Main Memory • Two 168-pin 3.3 V DIMM sockets • Supports up to 512 MB memory • Unbuffered Synchronous DRAM (SDRAM)
Intel 810	Intel 82810 PCI/A.G.P. controller (PAC)
AGPset	• Intel 810 AGPset; AC 97 • Integrated Accelerated Graphics Port (A.G.P.) controller
SLOT	• 1 X AMR (Audio Modem Rise) Slot • 3 X PCI Solt Supports 33MHz & PCI 2.2 compliant
I/O	• 2 X Ultra DMA 33/66 Bus Master IDE ports on board • 1 X FDD, 1 X COM, 1 X LPT, PS/2 keyboard, PS/2 Mouse on board • 1 X VGA(DB15), 1 X Joystick, 1 X Line-in, 1 X Line-out 1 X MIC on board • 2 X USB ports on board
Power	• ATX Power connector • Power-on by Keyboard, PS/2 Mouse, LAN, RTC, Modem & Switch • Power-off by Windows R 95/98/ME Shut & Switch • Suspend / Wake-on by ACPI & APM device • AC Recovery ON/OFF control; 3 Level ACPI LED • Stop CPU Fan during entering suspend mode
From FACTOR/PCB	• Micro ATX, 4 layer PCB
H/W Monitoring	• Auto speed down and Alarm when CPU overheat of Fan failure (OS independent & Driverless) • 3 Fan Power & Speed Detection Connectors; Case open Detection • System Health status detect & report by BIOS, LDCM & SIV • H/W detect +/-5V, +/-12V, CPU Voltage & CMOS battery Status
BIOS	• 4Mbit Flash RAM • AWARD BIOS with Enhanced ACPI Feature for PC98/ Win98 Compliance, Green, PnP, DMI, INT13 (>8.4GB) & Anti-Virus functions • IDE#1~#4, SCSI, LS120, ZIP & CD-ROM bootable • Auto-detect & report system health status
Other Features	• Suspend-To-RAM (STR) • Includes Wake-On-LAN Header (WOL) • Includes Wake-On Ring (WOR) • Poly fuse for keyboard, USB, VGA & Game overcurrent protection

Blank

Appendix B
Solving Common Problems

This chapter instructs you how to deal with the problems you might experience when using your computer. The problem is listed first, followed by the solution. Read it before calling a technician if a problem occurs.

Power

Cause	Solution
My computer doesn't work	**Computer is not properly connected to a grounded wall outlet.** Make sure the power cord is firmly plugged into the wall outlet and into the Wall outlet is not working. To check to see whether the wall outlet works, plug other device (such as a lamp) into the wall outlet. If it is not working, use other wall outlet.
	When the computer turned down by sudden power failure, it will not operate if you press the power button. To turn on the computer, refer to the followings: Unplug the power cord to turn off your computer and wait about 10 seconds for complete discharge and re-plug the power cord. Then press the power button.

Hard Disk Drive

Cause	Solution
Hard disk drive operation seems	**The files stored on your hard disk may be fragmented.** Check for lost allocation units by running Disk Defragmenter. (For slow more information, refer to the Windows 98 manual that came with your computer.)
Hard disk drive access indicator light stays on	**The files stored on your hard disk may be corrupted.** Check for lost allocation units by running Disk Defragmenter. (For more information, refer to the Windows 98 manual that came with your computer.)

CD/DVD-ROM Drive

Cause	Solution
The CD/DVD-ROM drive cannot read CD/DVD	**CD/DVD is not properly seated in the CD/DVD-ROM drive.** Eject the CD/DVD, gently but firmly press down on the CD/DVD to seat it in the drive, then reload.
	Your CD/DVD-ROM drive is not recognized. Turn off the computer, wait at least 30 seconds, and then turn on the computer.
	CD/DVD has been inserted upside down. Eject the CD/DVD, turn it over, then reload. (The label on the CD/DVD should be facing up.)
	CD/DVD is dirty. Clean the CD/DVD with a CD/DVD cleaning kit (available in computer stores).
	CD/DVD is defected. Try another CD/DVD. If it operates well, the CD/DVD is defected.
	How to use the CD/DVD-ROM drive in Real MS-DOS mode? If you reboot your computer by selecting "Restart in MS-DOS mode" option in "Shut Down Windows," you can use the CD/DVD-ROM drive. However, to use the CD/DVD-ROM drive in real MS-DOS mode, manually delete the "REM" of the line "REM Mscdex /d:gem001" in the AUTOEXEC.BAT file. <AUTOEXEC.BAT> ... REM (CD-ROM DRIVE) Mscdex /d:gem001 ...
The DVD-ROM drive takes about 5 to 10 seconds to open the tray when I press the eject button	**The high speed DVD-ROM drive takes few seconds to stop the running of the spindle motor when you press the eject button, immediately after using CD or DVD, to open the tray.** Wait about 5 to 10 seconds after pressing the eject button to give the DVD sufficient time to stop the running of the spindle motor and eject the tray.

Audio

Cause	Solution
How do I control the audio volume When the level?	**To control the audio volume level, use the volume control box.** Click on the Speaker icon located on the right of your Windows taskbar. volume control box appears, drag the volume bar up or down to adjust the audio volume level.
	To control the audio volume level for each device, use the Master Out window. Double-click the Speaker icon located on the right of your Windows taskbar. When the Master Out window appears, in the each device area, drag the volume bar up or down to adjust the audio volume level.
Computer doesn't make any sound	**Audio has been muted.** Click on the Speaker icon located on the right of your Windows taskbar. When the volume control box appears, verify that the Mute option check box is empty.
	Volume is turned down. The volume level may be too low. Click on the Speaker icon located on the right of your Windows taskbar. When the volume control box appears, drag the volume bar upward.
	The speakers are not properly connected. Make sure that the speakers are properly connected to the computer.

Floppy Disk Drive

Cause	Solution
Floppy disk drive light stays on	**Disk is incorrectly inserted.** Remove the disk and reinsert it.
	Disk is damaged. Use another disk or check the disk by running ScanDisk. (For detail information, refer to your Windows 98 manual.)
Floppy disk drive can't write to a disk	**Disk is unformatted.** Format the disk (Refer to your Windows Help in Windows 98. To open Windows Help, click the Start button, and then click Help.)
	Disk is write-protected. Remove the write-protection or use another disk that is not write-protected. To remove write-protection from a disk, slide the small black tab on the back of the disk to cover the hole.
Floppy disk drive can't read the diskeete	**Disk is unformatted.** Format the disk. (Refer to your Windows Help in Windows 98. To open Windows Help,click the Start button, and then click Help.)

Display & Monitor

Cause	Solution
The monitor doesn't work	**The brightness and contrast controls aren't set properly** Adjust the brightness and contrast controls on the monitor.
	The cable connecting the monitor to your computer isn't connected properly. Make sure that the monitor connector is properly and securely connected to the video connector of your computer.
	Monitor is not properly connected to a grounded wall outlet. Make sure the power cord is firmly plugged into the wall outlet and into the monitor.
	You have a screen blanking utility installed or your computer entered power management mode. Press any key or move your mouse. Your current screen will reappear.
How do I change the display resolution or color depth?	**To change the display resolution or color depth, use the Display Properties window.** To change the display resolution and color depth, follow these steps: 1. Click the Start button, point to Settings, click Control Panel, and then double click the Display icon. Or click the right mouse button on the empty desktop area and click Properties. 2. When the Display Properties window appears, click the Settings tab. 3. Select the color depth from the Colors area and the resolution from the Screen area. Click OK. 4. If you changed color depth, the system would reboot. If you changed resolution only, the screen will be changed to the new settings.

How do I use the old (existing) monitor that doesn't support the factory default display setting (SVGA mode, 800*600)?

To use the old (existing) monitor, you must start Windows in safe mode, and then set the resolution and color depth as follows:

1. Press the power button to start your system.

2. Press and hold the F8 key until the Microsoft Windows 98 Startup Menu appears.

3. Enter the number for Safe mode, and then press ENTER.

```
Microsoft Windows Startup Menu

   1. Normal
   2. Logged (\BOOTLOG.TXT)
   3. Safe mode
   4. Step-by-step confirmation
   5. Command prompt only
   6. Safe mode command prompt only

Enter a choice : 3
```

4. Click OK in the Desktop window.
5. In the Windows desktop, click the Start button, point to Settings, click Control Panel, and then double-click the Display icon. Or click the right mouse button on the empty desktop area and click Properties.
6. When the Display Properties window appears, click the Settings tab.
7. Click OK.

8. Click Yes to continue.
9. Click Yes to restart your computer.

NOTE

*In case your existing monitor supports higher resolutions or color depths than 640*480 and 16 Colors, change the resolution and color depth after restarting.*

10. If the Windows screen doesn't appear on the monitor after restarting, turn off the computer and follow these steps.
11. Repeat the steps from 1 to 6.
12. Click Advanced.
13. Click the Adapter tab.
14. Click Change.
15. When the Update Device Driver Wizard window appears, click Next.
16. Check the "Display a list of all the drivers in a specific location, so you can select the driver you want." option and click Next.
17. Select the Display adapters item in the list box and click Next.
18. Select the "Standard display types" menu in the Manufacturers list box and select the model for your system in the Models list box. Then click Next.
19. Click Yes.
20. Click Next.
21. Click Finish.
22. Click Close.
23. Click Close in the Display Properties window.
24. Click Yes to continue.
25. Click Yes to restart your computer.

Keyboard

Cause	Solution
Keyboard doesn't work	**Keyboard isn't firmly or securely connected to the keyboard connector.** Check that the keyboard is connected to the keyboard connector on the back of your computer, not the mouse connector.

Mouse

Cause	Solution
Mouse doesn't work	**Mouse isn't firmly or securely connected to the mouse connector.** Check that the mouse is connected to the mouse connector on the back of your computer, not the keyboard connector.
	Mouse needs cleaning. To clean the mouse ball, remove the mouse ball by unscrewing the bottom of the mouse. Then clean the mouse ball with a damp cloth and replace the mouse ball.

Option Card

Cause	Solution
After you add a PCI option card in the empty slot or change the slot location of your PCI option card, your computer isn't working properly	**Your computer can't recognize the option card.** To recognize the option card, follow these steps: 1. Click the Start button, and then point to Settings. 2. Click Control Panel. 3. Double-click the System icon. 4. Click the Device Manager tab in the System Properties window. 5. Click the Refresh button. This option updates the hardware list. This process may take a few minutes.

Blank

Appendix C
Approval Statements

FCC Compliance Statement

This equipment has been tested and found to comply with the limits for a class B digital device, pursuant to Part 15 of the FCC Rules. These limits are designed to provide reasonable protection against harmful interference in a residential installation. This equipment generates, uses, and can radiate radio frequency energy and, if not installed and used in accordance with the instructions, may cause harmful interference to radio and television reception. However, there is no guarantee that interference will not occur in a particular installation. If this equipment does cause interference to radio and television reception, which can be determined by turning the equipment off and on, the user is encouraged to try to correct the interference by one or more of the following measures:

- Reorient or relocate the receiving antenna.
- Increase the separation between the equipment and receiver.
- Connect the equipment into an outlet on a circuit different from that to which the receiver is connected.
- Consult the dealer or an experienced radio/TV technician for help.

Warning

The connection of a non-shielded equipment interface cable to this equipment will invalidate the FCC Certification of this device and may cause interference levels that exceed the limits established by the FCC for this equipment. It is the responsibility of the user to obtain and use a shielded equipment interface cable with this device. If this equipment has more than one interface connector, do not leave cables connected to unused interfaces.

Changes or modifications not expressly approved by the manufacturer could void the user’s authority to operate the equipment.

For Canadian Users

This digital apparatus does not exceed the Class B limits for radio noise emissions from digital apparatus as set out in the radio interference regulations of the Canadian Department of Communications.

Le présent appareil numérique n'émet pas de bruits radio électriques dépassant les limites applicables aux appareils numériques de Class B prescrites dans le règlement sur le brouillage radio électrique édicté par le Ministère des Communications du Canada.

Battery Warning Instruction

Caution

If battery is incorrectly replaced there poses a danger of explosion. Replace battery only with the same or equivalent type recommended by the manufacturer. Discard used batteries according to the manufacturer's instructions.

Attention

Il y a danger d'explosion s'il y a remplacement incorrect de la batterie. Remplacer uniquement avec une batterie du méme type ou d'un type recommandé par le constructeur. Mettre au rébut les batteries usagées conformément aux instructions du fabricant.

Vorsicht

Explosionsgefahr bei unsachgemäß em Austausch der Batterie. Ersatz nur durch denselben oder einen vom Hersteller empfohlenen ähnlichen Typ. Entsorgung gebraushter Batterien nach Angaben des Herstellers.

Fuse Warning Instruction

Caution

For continued protection against risk of fire, replace only with same type and rating of fuse.
Disconnect input power before servicing. Only connect this equipment to an earthed socket outlet.

Vorsicht

Vor jeder service-arbeit netzstecker ziehen! Apparatet ma kun tilkobles jordet stikkontakt.

Attention

Debrancher avant d'ouvrir. Apparaten skall anslutas till jordat nätuttag.

Atencion

Desconecte fuerza electrica antes del servicio. Laite on liitettävä suojakosketinistoraasian.

Laser Product

Class 1 Laser Product

This equipment complies with European Standard EN60825 [harmonized with International Electrotechnical Commission (IEC) Publication 825].

This equipment is classified as a Class 1 LASER product and there is no hazardous LASER radiation with the safety protection.

Caution

The laser used in the CD-ROM drive can damage your eyes. Do not attempt to open the cover.
To reduce the risk of electric shock, do not remove cover (or back).
No user-serviceable parts inside.
Refer servicing to qualified service personnel.
Use of controls or adjustments or performance of procedures other than those specified herein may result in hazardous radiation exposure.
Do not open the top cover of the drive and never touch the internal parts in order to avoid EXPOSURE TO INVISIBLE LASER RADIATION.
When the power switch is On, do not place your eyes close to the font panel opening door and other openings to look into the inside of the drive.

Achtung

Um die Gefahr eines elektrischen Schlages zu Vermindem, Entfernen Sie nicht das Gehäuse.
Keine durch den Anwender zu reparierende Teile im innern.
Überlassen Sie den Service qualifiziertem Service-Personal.
Da der im CD-ROM Laufwerk benutzte Laser gefährlich für die Augen ist, sollten Sie kenieswegs versuchen das Gehäuse zu Öffnen.
Lassen Sie den Service nur durch qualifizierte Servicestellen durchfuhern.

Attention

Pour reduire les risques de decharges, ne demontez pas le capot (ou le panneau arriere) du lecteur.
Aucune des pieces internes ne doit etre manipulee par l’utilisateur.
Toute interventien doit etre effectuee par un personnel qualifie.
Le rayon laser utilisé dans le lecteur CD-ROM est invisible à l’ceil nu. N’essayez donc pas de démonter le boiter. Pour toute intervention, adressez-vous à un personnel qualifié.

Warning

To reduce the risk of fire or electric shock, do not expose this appliance to rain or moisture.

Avertissement

Pour réduire les risques d’incendie ou de choc électrique, n’exposez pas cet appareil à la pluie ou à l’humidité.

Wanung

Um die Gefahr eines Feuers oder eines elektrischen Schlages zu vermeiden, setzen sie dieses Gerät niemals Regen oder Feuchtigkeit aus.
Use of controls or performance of procedures other than those specified herein may result in hazardous radiation exposure.