VM5752-X Engraving draft file

PU

label is inside the battery compartment

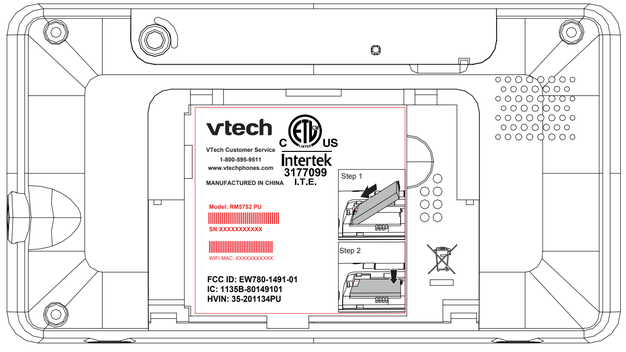

PU LABEL
SIZE: 57X56mm
50# UL Approved PET

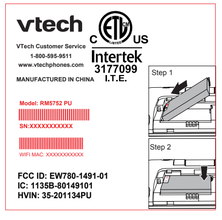

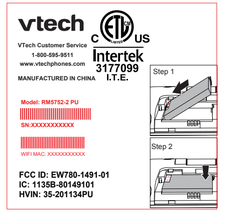

BU

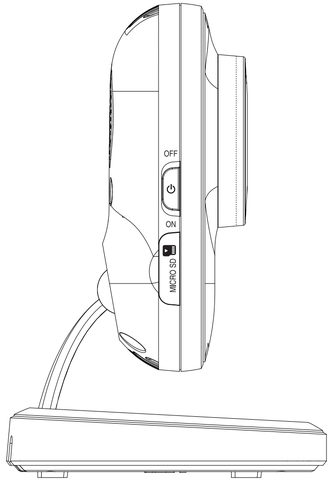

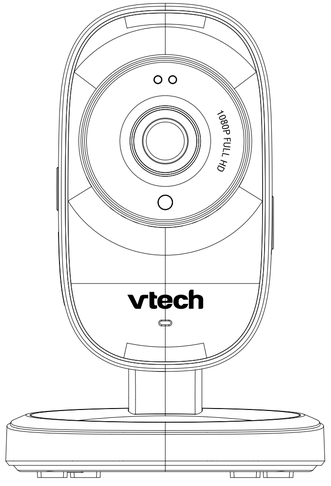

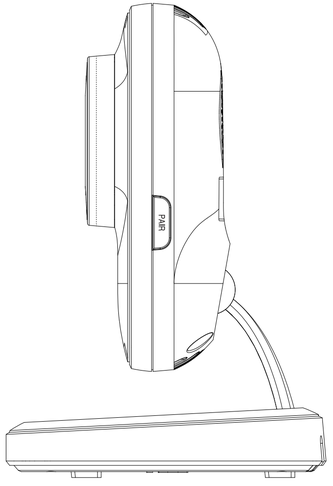

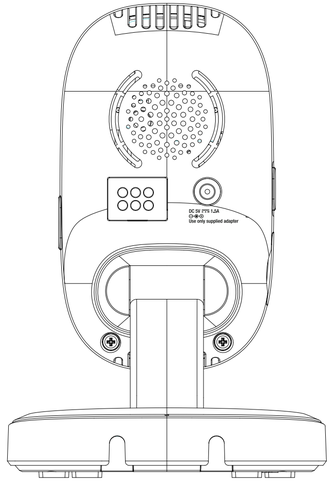

For Baby Unit

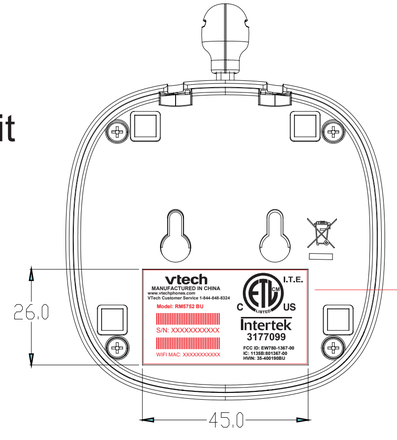

BU SN LBL

SIZE: 44.5X25.5,mm
50# UL Approved PET

RM5712 SN LBL