2/F., Garment Centre,
576 Castle Peak Road, Kowloon,
Hong Kong.

Telephone: (852) 2173 8888
Facsimile: (852) 2785 5487
www.intertek.com

# TEST REPORT

## SPECIFIC ABSORPTION RATE (SAR) EVALUATION REPORT

**Report No.: 22041318HKG-001**

For Video Monitor - Parent Unit
Model: VM3258 PU, VM3258-2 PU, VM3258-ab PU,
VM3262 PU, VM3262-2 PU, VM3262-ab PU,
VM923 PU, VM923-2 PU, VM923-ab PU
Brand Name: vtech
FCC ID: EW780-2635-01B

Prepared for
VTech Telecommunications Ltd.
23/F., Tai Ping Industrial Centre, Block 1,
57 Ting Kok Road, Tai Po,
Hong Kong.

| PREPARED AND CHECKED BY: | APPROVED BY: |
|---|---|
| Signed On File<br>Lee King Fai, Thomas<br>Assistant Engineer<br>Date: July 13, 2022 | Digitally signed by Kenneth Wong<br>Location: Intertek Testing Services Hong Kong Limited<br>Wong Kwok Yeung, Kenneth<br>Assistant Manager<br>Date: August 16, 2022 |

Intertek's standard Terms and Conditions can be obtained at our website http://www.intertek.com/terms/.
The test report only allows to be revised within the retention period unless further standard or the requirement was noticed.
This report is for the exclusive use of Intertek's Client and is provided pursuant to the agreement between Intertek and its Client. Intertek's responsibility and liability are limited to the terms and conditions of the agreement. Intertek assumes no liability to any party, other than to the Client in accordance with the agreement, for any loss, expense or damage occasioned by the use of this report. Only the Client is authorized to permit copying or distribution of this report and then only in its entirety. Any use of the Intertek name or one of its marks for the sale or advertisement of the tested material, product or service must first be approved in writing by Intertek. The observations and test results in this report are relevant only to the sample tested. This report by itself does not imply that the material, product, or service is or has ever been under an Intertek certification program.
© 2017 Intertek

# TEST REPORT

## TABLE OF CONTENTS

1 Test Result Summary ..... 3

2 General Information ..... 4

3 SAR Measurement System Description ..... 8

4 Tissue Verificaiton ..... 16

5 SAR Measurement System Verification ..... 19

6 SAR Evaluation ..... 21

7 Test Equipment List ..... 36

8 Measurement Uncertainty ..... 37

9 E-Field Probe and Dipole Antenna Calibration ..... 42

APPENDIX A – System Check Data ..... 43
APPENDIX B – SAR Evaluation Data ..... 44
APPENDIX C – E-Field Probe and Dipole Antenna Calibration ..... 46
APPENDIX D – SAR SYSTEM VALIDATION ..... 47

# TEST REPORT

## 1. TEST RESULT SUMMARY

| | |
|---|---|
| Applicant: | VTech Telecommunications Ltd. |
| Applicant Address: | 23/F., Tai Ping Industrial Centre, Block 1,<br>57 Ting Kok Road, Tai Po, Hong Kong. |
| Brand Name: | vtech |
| Description of EUT: | Video Monitor - Parent Unit |
| Model: | VM3258 PU, VM3258-2 PU, VM3258-ab PU,<br>VM3262 PU, VM3262-2 PU, VM3262-ab PU,<br>VM923 PU, VM923-2 PU, VM923-ab PU |
| FCC ID: | EW780-2635-01B |
| Serial Number: | N/A |
| Test Device: | Production Unit |
| EUT Exercising Software | ComTestSerial Version 3.0.0.108 |
| Exposure Category: | General Population/Uncontrolled Exposure |
| Date of Test: | July 13, 2022 |
| Test Location: | Workshop No. 3, G/F., World-Wide Industrial Centre,<br>3-47 Shan Mei Street, Fo Tan, Sha Tin,<br>N.T., Hong Kong SAR, China. |
| CAB Identifier: | HKAP01 |
| Environmental Conditions: | Temperature: +18 to 25°C<br>Humidity 25 to 75% |
| Test Specification: | ANSI/IEEE C95.1<br>IEEE Std 1528: 2013<br>FCC KDB Publication 447498 D01 v06<br>FCC KDB Publication 865664 D01 v01r04<br>FCC KDB Publication 865664 D02 v01r02 |

The maximum spatial peak SAR value for the sample device averaged over 1g was found to be:

| Band | Operating Mode | TX Frequency (MHz) | Highest Reported SAR | |
|---|---|---|---|---|
| | | | In-front-of mouth | Body |
| 2.4GHz FHSS | Data | 2405 – 2475 | 0.481 W/kg | 0.510 W/kg |

This wireless portable device has been shown to be capable of compliance for localized specific absorption rate (SAR) for uncontrolled environment / general population exposure limits specified in ANSI/IEEE C95.1.

# 2. GENERAL INFORMATION

## 2.1. Description of Equipment Under Test (EUT)

| | |
|---|---|
| Manufacturer: | VTech (Dongguan) Telecommunications Limited |
| Manufacturer Address: | VTech Science Park, Xia Ling Bei Management Zone,<br>Liaobu, Dongguan, Guangdong, China. |
| Device Dimension (L x W) : | 117 (mm) x 60 (mm) |
| Device Thickness: | 33 (mm) |
| Antenna Gain: | 2 dBi |
| Operating Configuration(s) / Mode: | In-front-of mouth (Data)<br>Body (Data) |
| TX Frequency (MHz): | 2405 - 2475MHz |
| Duty Cycle*: | 9.7% |
| H/W Version: | N/A |
| S/W Version: | N/A |
| Battery Type: | 3.6VDC (1 x 3.6V 2600 mAh Ni-MH rechargeable battery) |
| Body-worn Accessories: | N/A |
| Remark: | The models VM3258-2 PU, VM3258-ab PU, VM3262 PU, VM3262-2 PU, VM3262-ab PU, VM923 PU, VM923-2 PU and VM923-ab PU are the same as the model VM3258 PU in hardware aspect as declared by client. The models are different in color and model number only as declared by client. Suffix ("a, b") indicates different number of Parent unit, and color of enclosure as declared by client. |

# TEST REPORT

## 2.2. EUT Antenna Locations

**Antenna Closed Configuration**

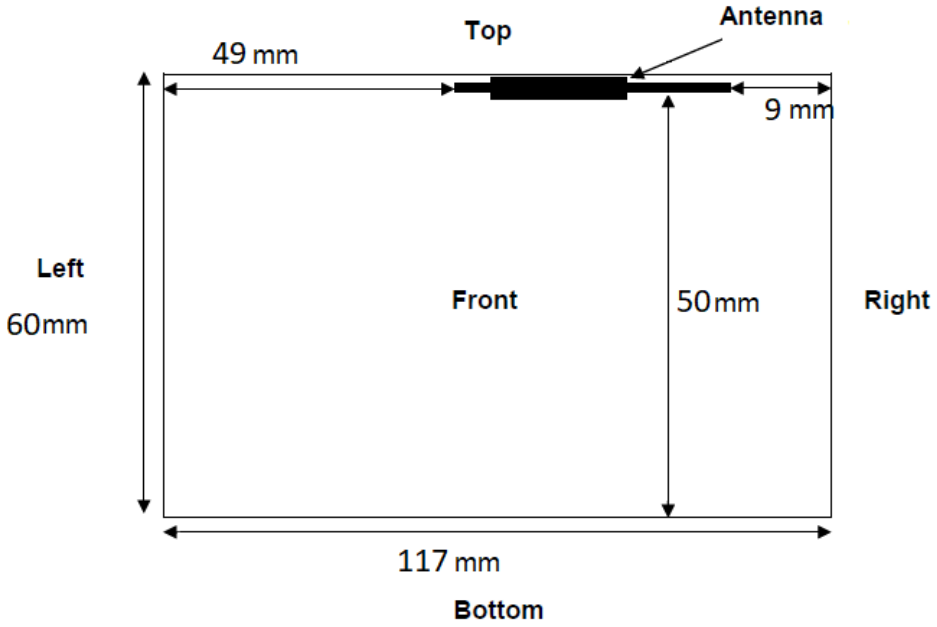


| Exposure Position | Separation Distance from the Antenna to the Outer Surface (Antenna Closed) |
|---|---|
| Front | 13 |
| Top | 3 |
| Left | 49 |
| Right | 9 |
| Back | 0 |
| Bottom | 50 |

Details of antenna specification are shown in separate antenna dimension document.

# TEST REPORT

## 2.2 EUT Antenna Locations (Cont'd)

**Antenna Extended Configuration**

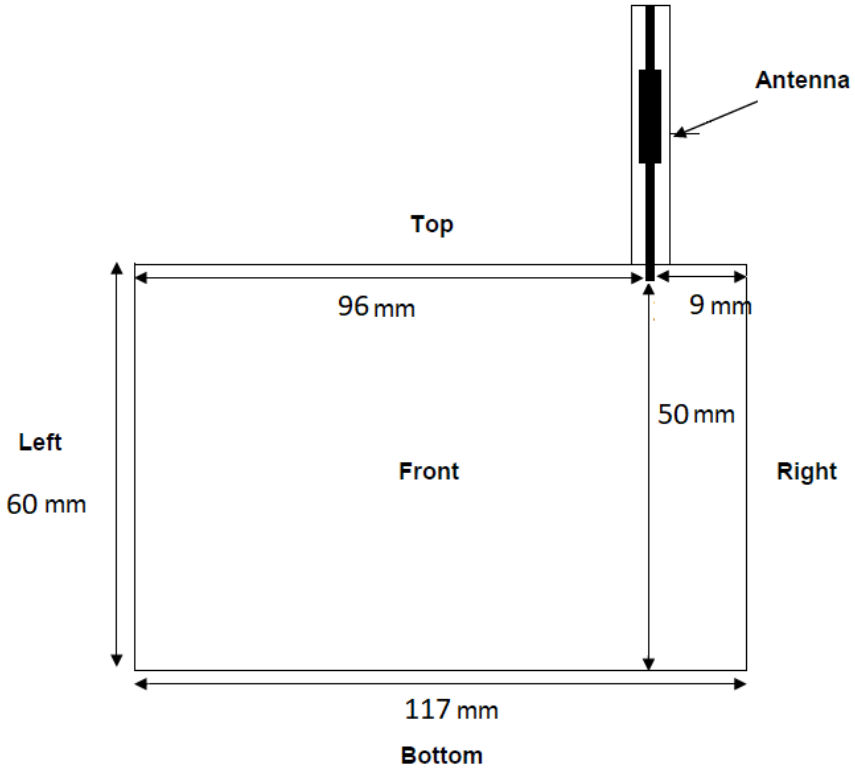


| Exposure Position | Separation Distance from the Antenna to the Outer Surface (Antenna extend) |
|---|---|
| Front | 13 |
| Top | 0 |
| Left | 96 |
| Right | 9 |
| Back | 0 |
| Bottom | 50 |

Details of antenna specification are shown in separate antenna dimension document.

## 2.3 Nominal and Maximum Output Power Specifications

The EUT operates using the following maximum and nominal output power specifications. SAR values were scaled to the maximum allowed power to determine compliance per KDB Publication 447498.

| Band | Operating Mode | TX Frequency (MHz) | Output Power | |
|---|---|---|---|---|
| | | | Nominal (dBm) | Maximum (dBm) |
| 2.4GHz FHSS | Data | 2405 – 2475 | 18.2 | 20 |

## 3. SAR MEASUREMENT SYSTEM DESCRIPTION

SAR is related to the rate at which energy is absorbed per unit mass in object exposed to a radio field. The SAR distribution in a biological body is complicated and is usually carried out by experimental techniques or numerical modeling. The standard recommends limits for two tiers of groups, occupational/controlled and occupational/uncontrolled, based on a person's awareness and ability to exercise control over his or her exposure. In general, occupational/controlled exposure limits are higher than the limits for general population/uncontrolled.
The SAR definition is the time derivative (rate) of the incremental energy (dW) absorbed by (dissipated in) an incremental mass (dm) contained in a volume element (dv) of given mass density (ρ). The equation description is as below:

$$\mathrm{SAR} = \frac{\mathrm{d}}{\mathrm{d}t}\left(\frac{\mathrm{d}W}{\mathrm{d}m}\right) = \frac{\mathrm{d}}{\mathrm{d}t}\left(\frac{\mathrm{d}W}{\rho \mathrm{d}V}\right)$$

SAR is expressed in units of Watts per kilogram (W/Kg)
SAR can be obtained using either of the following equations:

$$\mathrm{SAR} = \frac{\sigma E^2}{\rho}$$

$$\mathrm{SAR} = c_h \left.\frac{\mathrm{d}T}{\mathrm{d}t}\right|_{t=0}$$

Where

| | |
|---|---|
| SAR | is the specific absorption rate in watts per kilogram; |
| E | is the r.m.s. value of the electric field strength in the tissue in volts per meter; |
| σ | is the conductivity of the tissue in siemens per metre; |
| ρ | is the density of the tissue in kilograms per cubic metre; |
| $c_h$ | is the heat capacity of the tissue in joules per kilogram and Kelvin; |
| $\frac{\mathrm{dT}}{\mathrm{dt}} \mid \mathrm{t} = 0$ | is the initial time derivative of temperature in the tissue in kelvins per second. |

## TEST REPORT

An SAR measurement system usually consists of a small diameter isotropic electric field probe, a multiple axis probe positioning system, a test device holder, one or more phantom models, the field probe instrumentation, a computer and other electronic equipment for controlling the probe and making the measurements. Other supporting equipment, such as a network analyzer, power meters and RF signal generators, are also required to measure the dielectric parameters of the simulated tissue media and to verify the measurement accuracy of the SAR system.

The SAR measurement system being used is COMOSAR system, which consists following items for performing compliance tests

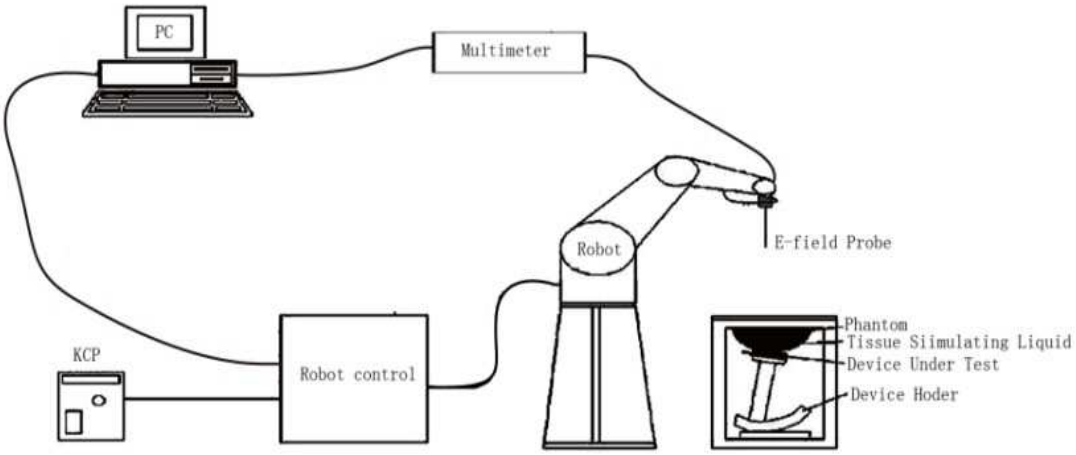


*Figure 1: Schematic diagram of the SAR measurement system*

- The PC. It controls most of the bench devices and stores measurement data. A computer running WinXP and the Opensar software.
- The E-Field probe. The probe is a 3-axis system made of 3 distinct dipoles. Each dipole returns a voltage in function of the ambient electric field.
- The Keithley multimeter measures each probe dipole voltages.
- The SAM phantom simulates a human head. The measurement of the electric field is made inside the phantom.
- The liquids simulate the dielectric properties of the human head tissues.
- The network emulator controls the mobile phone under test.
- The validation dipoles are used to measure a reference SAR. They are used to periodically check the bench to make sure that there is no drift of the system characteristics over time.
- The phantom, the device holder and other accessories according to the targeted measurement.

# TEST REPORT

## ROBOT

The COMOSAR system uses the KUKA robot from SATIMO SA (France).For the 6-axis controller COMOSAR system, the KUKA robot controller version from SATIMO is used.
The XL robot series have many features that are important for our application:

- High precision (repeatability 0.02 mm)
- High reliability (industrial design)
- Jerk-free straight movements
- Low ELF interference (the closed metallic construction shields against motor control fields)
- 6-axis controller

# TEST REPORT

## COMOSAR E-FIELD PROBE

The SAR measurement is conducted with the dissymmetric probe manufactured by SATIMO. The probe is specially designed and calibrated for use in liquid with high permittivity. The dissymmetric probe has special calibration in liquid at different frequency. SATIMO conducts the probe calibration in compliance with international and national standards (e.g. IEC/IEEE 62209-1528:2020 and relevant KDB files). The calibration data are in Appendix C.

| | |
|---|---|
| **Model** | SSE2 |
| **Manufacturer** | MVG |
| **Frequency** | 0.45GHz-6GHz<br>Linearity:±0.08dB |
| **Dynamic Range** | 0.01W/Kg-100W/Kg<br>Linearity:±0.08dB |
| **Dimensions** | Overall length:330mm<br>Length of individual dipoles:2mm<br>Maximum external diameter:8mm<br>Probe Tip external diameter:2.5mm<br>Distance between dipoles/ probe extremity:1mm |

# TEST REPORT

## VIDEO POSITIONING SYSTEM

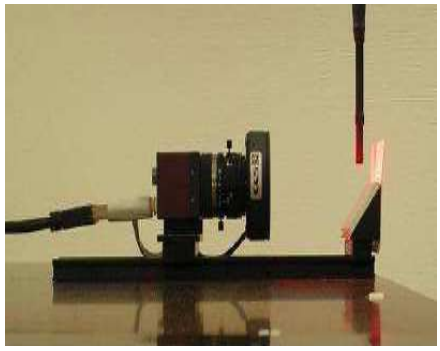

The video positioning system is used in OpenSAR to check the probe. Which is composed of a camera, LED, mirror and mechanical parts. The camera is piloted by the main computer with firewire link.

During the process, the actual position of the probe tip with respect to the robot arm is measured, as well as the probe length and the horizontal probe offset. The software then corrects all movements, such that the robot coordinates are valid for the probe tip.

The repeatability of this process is better than 0.1 mm. If a position has been taught with an aligned probe, the same position will be reached with another aligned probe within 0.1 mm, even if the other probe has different dimensions. During probe rotations, the probe tip will keep its actual position.

# TEST REPORT

## SAM TWIN PHANTOM

The SAM twin phantom is a fiberglass shell phantom with 2mm ± 0.2 mm shell thickness (except the ear region where shell thickness increases to 6mm± 0.2 mm), relative permittivity εr = 3.4 and loss tangent δ = 0.02. It has three measurement areas:

- Left head
- Right head
- Flat phantom

The bottom plate contains three pair of bolts for locking the device holder. The device holder positions are adjusted to the standard measurement positions in the three sections. A white cover is provided to tap the phantom during off-periods to prevent water evaporation and changes in the liquid parameters. On the phantom top, three reference markers are provided to identify the phantom position with respect to the robot.

# TEST REPORT

## ELLIPTICAL PHANTOM

The elliptical phantom is a fiberglass shell phantom with

- 2mm ± 0.2 mm shell thickness
- relative permittivity εr = 3.4
- loss tangent δ = 0.02

## DEVICE HOLDER

The COMOSAR device holder is designed to cope with different positions given in the standard. It has two scales for the device rotation (with respect to the body axis) and the device inclination (with respect to the line between the ear reference points). The rotation center for both scales is the ear reference point (EPR).

Thus the device needs no repositioning when changing the angles.

The COMOSAR device holder has been made out of low-loss POM material having the following dielectric parameters: relative permittivity εr =3.7 and loss tangent δ = 0.005. The amount of dielectric material has been reduced in the closest vicinity of the device, since measurements have suggested that the influence of the clamp on the test results could thus be lowered.

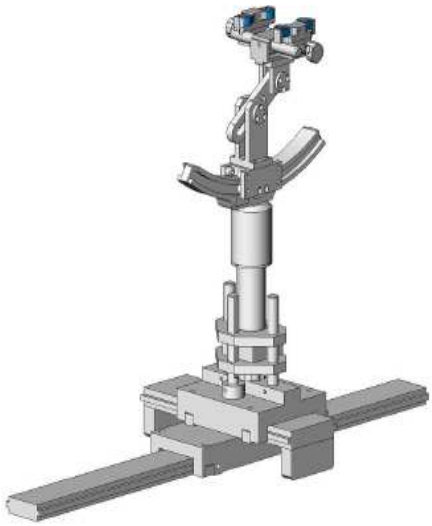

## TEST REPORT

During measurement, the system first does an area (2D) scan at a fixed depth within the liquid from the inside wall of the phantom scanning area is greater than the projection of EUT and antenna.

Area Scan Parameters extracted from KDB 865664

| | ≤ 3 GHz | > 3 GHz |
|---|---|---|
| Maximum distance from closest measurement point (geometric center of probe sensors) to phantom surface | 5 mm ± 1 mm | ½·$\delta$·ln(2) mm ± 0.5 mm |
| Maximum probe angle from probe axis to phantom surface normal at the measurement location | 30° ± 1° | 20° ± 1° |
| Maximum area scan spatial resolution: $\Delta x_{Area}$, $\Delta y_{Area}$ | ≤ 2 GHz: ≤ 15 mm<br>2 – 3 GHz: ≤ 12 mm | 3 – 4 GHz: ≤ 12 mm<br>4 – 6 GHz: ≤ 10 mm |
| | When the x or y dimension of the test device, in the measurement plane orientation, is smaller than the above, the measurement resolution must be ≤ the corresponding x or y dimension of the test device with at least one measurement point on the test device. | |

When the maximum SAR point has been found, the system will then carry out a zoom (3D) scan centered at that point to determine volume averaged SAR level.

Zoom Scan Parameters extracted from KDB 865664

| | | | | |
|---|---|---|---|---|
| Maximum zoom scan spatial resolution: $\Delta x_{Zoom}$, $\Delta y_{Zoom}$ | | | ≤ 2 GHz: ≤ 8 mm<br>2 – 3 GHz: ≤ 5 mm* | 3 – 4 GHz: ≤ 5 mm*<br>4 – 6 GHz: ≤ 4 mm* |
| Maximum zoom scan spatial resolution, normal to phantom surface | uniform grid: $\Delta z_{Zoom}(n)$ | | ≤ 5 mm | 3 – 4 GHz: ≤ 4 mm<br>4 – 5 GHz: ≤ 3 mm<br>5 – 6 GHz: ≤ 2 mm |
| | graded grid | $\Delta z_{Zoom}(1)$: between 1st two points closest to phantom surface | ≤ 4 mm | 3 – 4 GHz: ≤ 3 mm<br>4 – 5 GHz: ≤ 2.5 mm<br>5 – 6 GHz: ≤ 2 mm |
| | | $\Delta z_{Zoom}(n>1)$: between subsequent points | ≤ 1.5·$\Delta z_{Zoom}(n-1)$ mm | |
| Minimum zoom scan volume | x, y, z | | ≥ 30 mm | 3 – 4 GHz: ≥ 28 mm<br>4 – 5 GHz: ≥ 25 mm<br>5 – 6 GHz: ≥ 22 mm |
| Note: $\delta$ is the penetration depth of a plane-wave at normal incidence to the tissue medium; see IEEE Std 1528-2013 for details.<br>* When zoom scan is required and the *reported* SAR from the *area scan based 1-g SAR estimation* procedures of KDB Publication 447498 is ≤ 1.4 W/kg, ≤ 8 mm, ≤ 7 mm and ≤ 5 mm zoom scan resolution may be applied, respectively, for 2 GHz to 3 GHz, 3 GHz to 4 GHz and 4 GHz to 6 GHz. | | | | |

## 4. TISSUE VERIFICATION

For SAR measurement of field distribution inside phantom, homogeneous tissue simulating liquid as below liquid recipes were filled to a depth of 15cm ± 0.5cm for below 3GHz measurement and of 10cm ± 0.5cm for above 3GHz.

### HEAD TISSUE RECIPES

| Frequency | Ingredients | | | | | |
|---|---|---|---|---|---|---|
| | De-ionized Water | Salt | 1,2 propanediol | DGBE | DGMH | Triton X100 |
| 450 MHz | 33.5% | 3.4% | 63.1% | | | |
| 750 MHz | 34.2% | 1.4% | 64.4% | | | |
| 900 MHz | 35.3% | 1.0% | 63.7% | | | |
| 1800 MHz | 55.2% | 0.6% | | 13.8% | | 30.4% |
| 1900 MHz | 55.3% | 0.5% | | 13.8% | | 30.4% |
| 2000 MHz | 55.3% | 0.4% | | 13.8% | | 30.5% |
| 2450 MHz | 55.7% | 0.3% | | 18.7% | | 25.3% |
| 5000 MHz | 65.3% | | | | 17.2% | 17.5% |

### BODY TISSUE RECIPES

| Frequency | Ingredients | | | | | |
|---|---|---|---|---|---|---|
| | De-ionized Water | Salt | 1,2 propanediol | DGBE | DGMH | Triton X100 |
| 450 MHz | 52.4% | 1.9% | 45.7% | | | |
| 750 MHz | 55.4% | 1.3% | 43.3% | | | |
| 900 MHz | 52.9% | 1.0% | 46.1% | | | |
| 1800 MHz | 70.8% | 0.5% | | 8.7% | | 20.0% |
| 1900 MHz | 70.1% | 0.4% | | 8.9% | | 20.6% |
| 2000 MHz | 70.2% | 0.3% | | 8.6% | | 20.9% |
| 2450 MHz | 70.8% | 0.3% | | 8.7% | | 20.2% |
| 5000 MHz | 77.8% | | | | 11.7% | 11.5% |

## TEST REPORT

The head tissue dielectric parameters recommended by the IEC/IEEE 62209-1528:2020 have been incorporated in the following table. These head parameters are derived from planar layer models simulating the highest expected SAR for the dielectric properties and tissue thickness variations in a human head. For other head and body tissue parameters, they are recommended by KDB 865664.

| Target Frequency | Head | | Body | |
|---|---|---|---|---|
| (MHz) | εr | σ (S/m) | εr | σ (S/m) |
| 300 | 45.3 | 0.87 | 58.2 | 0.92 |
| 450 | 43.5 | 0.87 | 56.7 | 0.94 |
| 835 | 41.5 | 0.90 | 55.2 | 0.97 |
| 900 | 41.5 | 0.97 | 55.0 | 1.05 |
| 915 | 41.5 | 1.01 | 55.0 | 1.06 |
| 1450 | 40.5 | 1.20 | 54.0 | 1.30 |
| 1610 | 40.3 | 1.29 | 53.8 | 1.40 |
| 1800 – 2000 | 40.0 | 1.40 | 53.3 | 1.52 |
| 2450 | 39.2 | 1.80 | 52.7 | 1.95 |
| 3000 | 38.5 | 2.40 | 52.0 | 2.73 |
| 5800 | 35.3 | 5.27 | 48.2 | 6.00 |

(εr = relative permittivity, σ = conductivity and ρ = 1000 kg/m3)

When a transmission band overlaps with one of the target frequencies, the tissue dielectric parameters of the tissue medium at the middle of a device transmission band should be within ±5% of the parameters specified at that target frequency.

## TEST REPORT

The dielectric parameters of the liquids were verified prior to the SAR evaluation using SATIMO Dielectric Probe Kit and R&S Network Analyzer ZVL6.

The dielectric parameters were:

Head Liquid

| Freq. (MHz) | Temp. (˚C) | $\varepsilon_r$ / Relative Permittivity | | | σ / Conductivity | | | ρ **(kg/m³) |
|---|---|---|---|---|---|---|---|---|
| | | Measured | Target* | Δ (±5%) | Measured | Target* | Δ (±5%) | |
| 2450 | 20.8 | 40.56 | 39.20 | 3.47 | 1.85 | 1.80 | 2.78 | 1000 |

* *Target values refer to KDB 865664*
** *Worst-case assumption*

Note:

1. Date of tissue verification measurement: July 13, 2022.

2. Ambient temperature: 20.8 deg C.

3. The temperature condition is within +/- 2 deg. C during the SAR measurements.

**TEST REPORT**

## 5. SAR MEASUREMENT SYSTEM VERIFICATION

Each SATIMO system is equipped with one or more system check kits. These units, together with the predefined measurement procedures within the SATIMO software, enable user to conduct the system check. System kit includes a dipole, and dipole device holder.

The system check verifies that the system operates within its specifications. It's performed daily or before every SAR measurement. The system check uses normal SAR measurement in the flat section of the phantom with a matched dipole at a specified distance. The system check setup is shown as below.

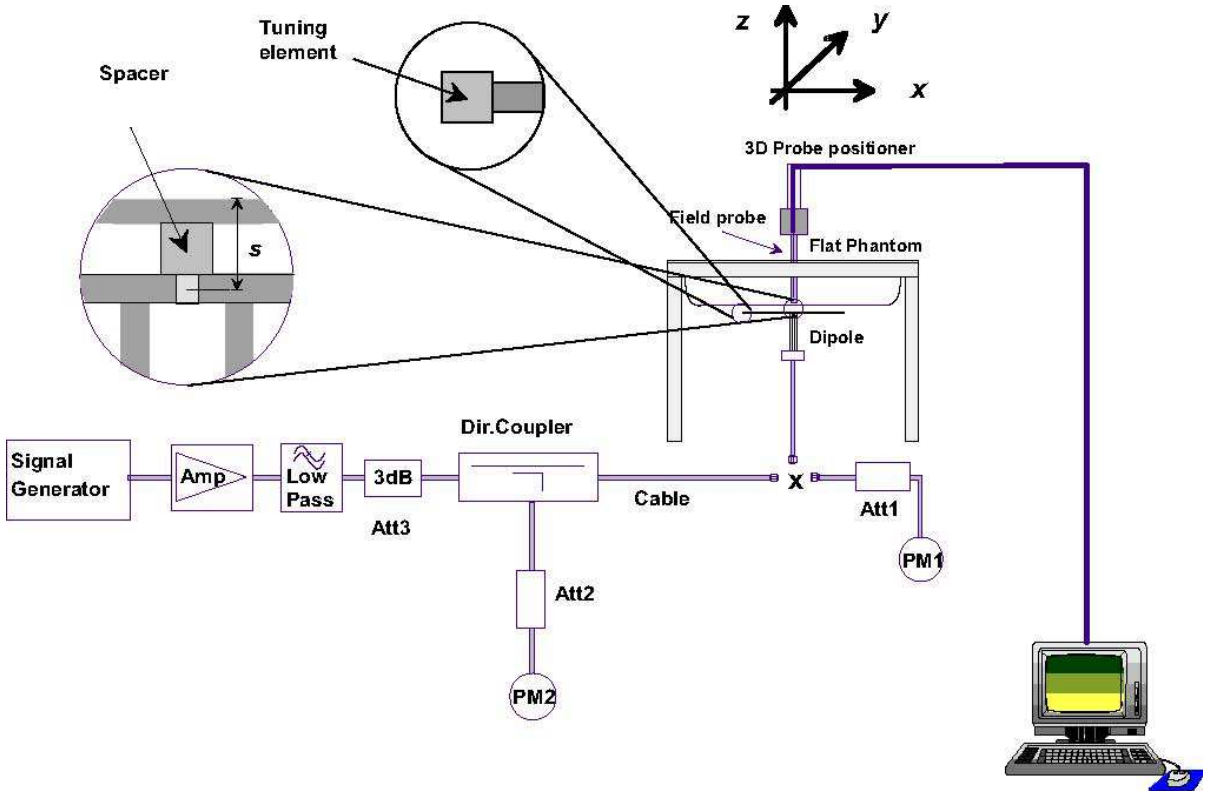

# TEST REPORT

## VALIDATION DIPOLE

The dipoles used is based on the IEC/IEEE 62209-1528:2020, and is complied with mechanical and electrical specifications in line with the requirements of both FCC and KDB requirement.

## SYSTEM CHECK RESULTS

| System Verification | | | | | | | | |
|---|---|---|---|---|---|---|---|---|
| **Date** | **Freq. (MHz)** | **Liquid Type** | **System Dipole** | **Serial No.** | **Target $SAR_{1g}$ (W/kg)** | **Measured $SAR_{1g}$ (W/kg)** | **Normalized $SAR_{1g}$ (W/kg)** | **Deviation (±10%)** |
| July 13, 2022 | 2450 | Head | 2450MHz | SN 22/16 DIP 2G450-411 | 55.89 | 5.678 | 56.78 | 1.02 |

* The target was quoted from dipole calibration report
* Input power level = 20dBm (0.1W)

$SAR_{1g}$ ambient measured value < 12 mW/kg

Details of System Verification plot is shown in the Appendix A - plot 1.

# 6. SAR EVALUATION

## 6.1. Device Test Positions Relative To The Head

This practice specifies two handset test positions against the head phantom—the “cheek” position and the “tilt” position. These two test positions are defined in the following subclauses. The handset should be tested in both positions on left and right sides of the SAM phantom. If handset construction is such that the handset positioning procedures described below to represent normal use conditions cannot be used, e.g., some asymmetric handsets, alternative alignment procedures should be adapted with all details provided in the test report. These alternative procedures should replicate intended use conditions as closely as possible according to the intent of the procedures described in this subclause.

# TEST REPORT

## DEFINITION OF THE CHEEK POSITION

The cheek position is established as follows:

1. Ready the handset for talk operation, if necessary. For example, for handsets with a cover piece (flip cover), open the cover. If the handset can transmit with the cover closed, both configurations must be tested.

2. Define two imaginary lines on the handset—the vertical centerline and the horizontal line. The vertical centerline passes through two points on the front side of the handset—the midpoint of the width wt of the handset at the level of the acoustic output (point A in below figure), and the midpoint of the width wb of the bottom of the handset (point B). The horizontal line is perpendicular to the vertical centerline and passes through the center of the acoustic output (see below left figure). The two lines intersect at point A. Note that for many handsets, point A coincides with the center of the acoustic output; however, the acoustic output may be located elsewhere on the horizontal line. Also note that the vertical centerline is not necessarily parallel to the front face of the handset (see right figure), especially for clamshell handsets, handsets with flip covers, and other irregularly-shaped handsets.

3. Position the handset close to the surface of the phantom such that point A is on the (virtual) extension of the line passing through points RE and LE on the phantom (see the figure as next page), such that the plane defined by the vertical centerline and the horizontal line of the handset is approximately parallel to the sagittal plane of the phantom.

4. Translate the handset towards the phantom along the line passing through RE and LE until handset point A touches the pinna at the ERP.

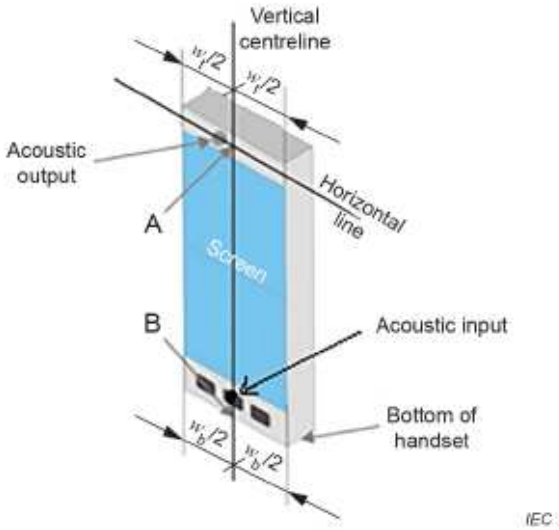


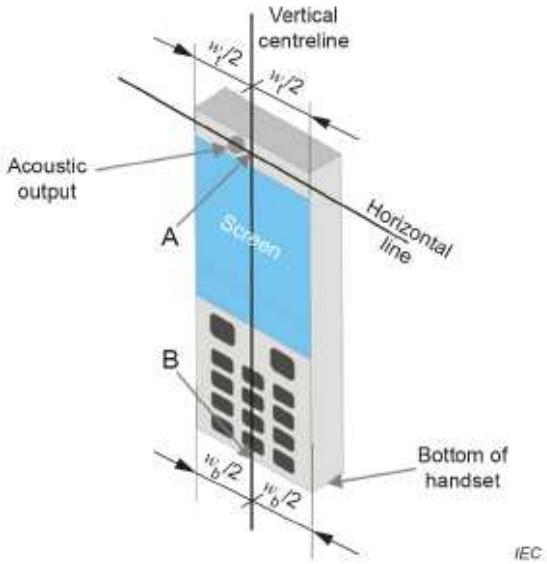


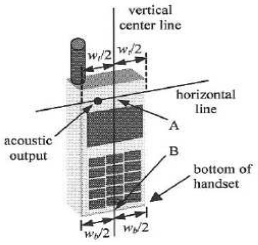


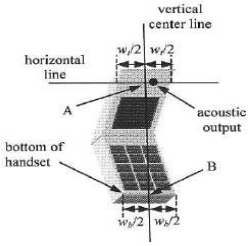

## TEST REPORT

5. While maintaining the handset in this plane, rotate it around the LE-RE line until the vertical centerline is in the plane normal to the plane containing B-M and N-F lines, i.e., the Reference Plane.

6. Rotate the handset around the vertical centerline until the handset (horizontal line) is parallel to the N-F line.

7. While maintaining the vertical centerline in the Reference Plane, keeping point A on the line passing through RE and LE, and maintaining the handset contact with the pinna, rotate the handset about the N-F line until any point on the handset is in contact with a phantom point below the pinna on the cheek.

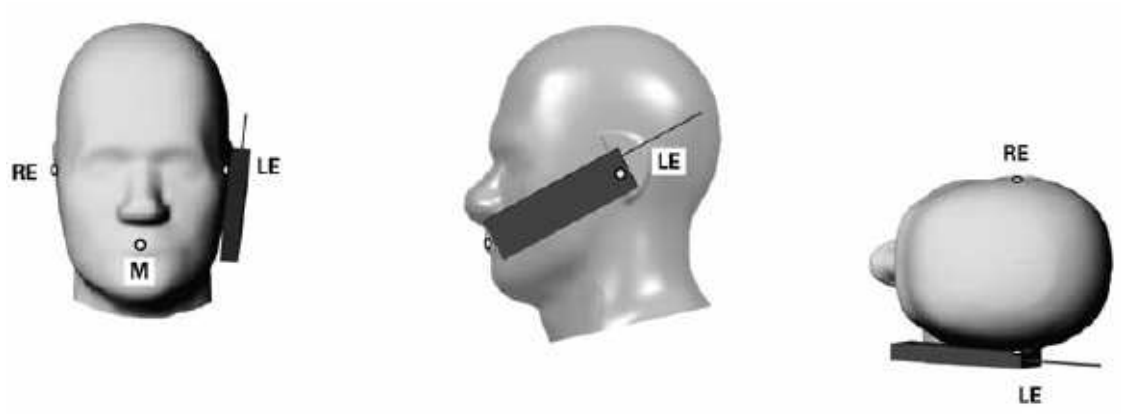

# TEST REPORT

## DEFINITION OF THE TILT POSITION

The tilt position is established as follows:

1. Repeat steps to place the device in the cheek position.

2. While maintaining the orientation of the handset, move the handset away from the pinna along the line passing through RE and LE far enough to allow a rotation of the handset away from the cheek by 15°.

3. Rotate the handset around the horizontal line by 15°.

4. While maintaining the orientation of the handset, move the handset towards the phantom on the line passing through RE and LE until any part of the handset touches the ear. The tilt position is obtained when the contact point is on the pinna. See the figure as below. If contact occurs at any location other than the pinna, e.g., the antenna at the back of the phantom head, the angle of the handset should be reduced.

5. In this case, the tilt position is obtained if any point on the handset is in contact with the pinna and a second point on the handset is in contact with the phantom, e.g., the antenna with the back of the head.

## 6.2. Device Test Positions Relative To Body-Worn Accessory

Body-worn operating configurations are tested with the belt-clips and holsters attached to the device and positioned against a flat phantom in a normal use configuration. Per FCC KDB Publication 648474, Body-worn accessory exposure is typically related to voice mode operations when handsets are carried in body worn accessories. The body-worn accessory procedures in FCC KDB Publication 447498 should be used to test for body-worn accessory SAR compliance, without a headset connected to it. This enables the test results for such configuration to be compatible with that required for hotspot mode when the body-worn accessory test separation distance is greater than or equal to that required for hotspot mode, when applicable. When the reported SAR for a body-worn accessory, measured without a headset connected to the handset, is >1.2W/kg, the highest reported SAR configuration for that wireless mode and frequency band should be reported for that body-worn accessory with a headset attached to the handset.

SAR evaluation is required for body-worn accessories supplied with the host device. The test configurations must be conservative for supporting the body-worn accessory use conditions expected by users. Body-worn accessories that do not contain metallic or conductive components may be tested according to worst-case exposure configurations, typically according to the smallest test separation distance required for the group of body-worn accessories with similar operating and exposure characteristics. All body-worn accessories containing metallic components, either supplied with the product or available as an option from the device manufacturer, must be tested in conjunction with the host device to demonstrate compliance.

Body-worn accessories may not always be supplied or available as options for some devices intended to be authorized for body-worn use. In this case, a test configuration with a separation distance between the back of the device and the flat phantom is used. Test position spacing was documented. Transmitters that are designed to operate in front of a person’s face, as in push-to-talk configurations, are tested for SAR compliance with the front of the device positioned to face the flat phantom in head fluid.

# TEST REPORT

## 6.3. Device Test Positions Relative To Body-Supported Device

Per IEC/IEEE 62209-1528: 2020, a typical example of a body supported device is a wireless enabled laptop device that among other orientations may be supported on the thighs of a sitting user. To represent this orientation, the device shall be positioned with its base against the flat phantom. Other orientations may be specified by the manufacturer in the user instructions. If the intended use is not specified, the device shall be tested directly against the flat phantom in all usable orientations.

Devices that fall into this category include tablet type portable computers and credit card transaction authorization terminals, point-of-sale and/or inventory terminals. Where these devices may be torso or limb-supported, the same principles for body-supported devices are applied.

The example in Figure a) shows a tablet form factor portable computer for which SAR should be separately assessed with each surface and the separation distances positioned against the flat phantom that correspond to the intended use as specified by the manufacturer. If the intended use is not specified in the user instructions, the device shall be tested directly against the flat phantom in all usable orientations.

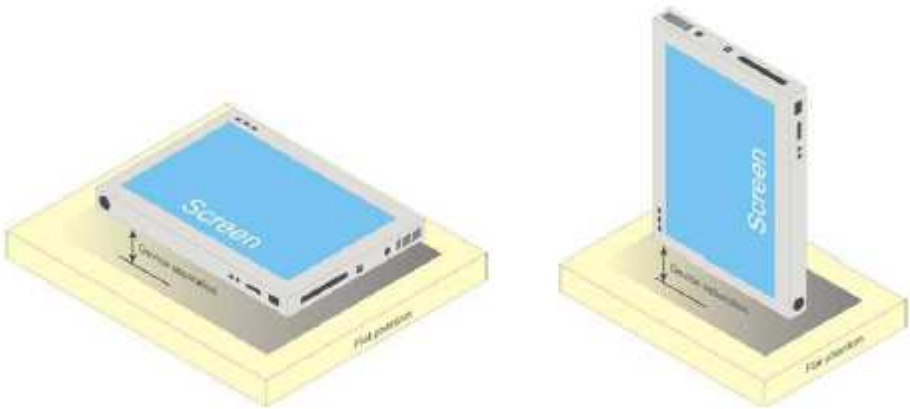


Figure a) – Tablet form factor portable computer

## TEST REPORT

A block diagram of testing procedure is shown as below figure.

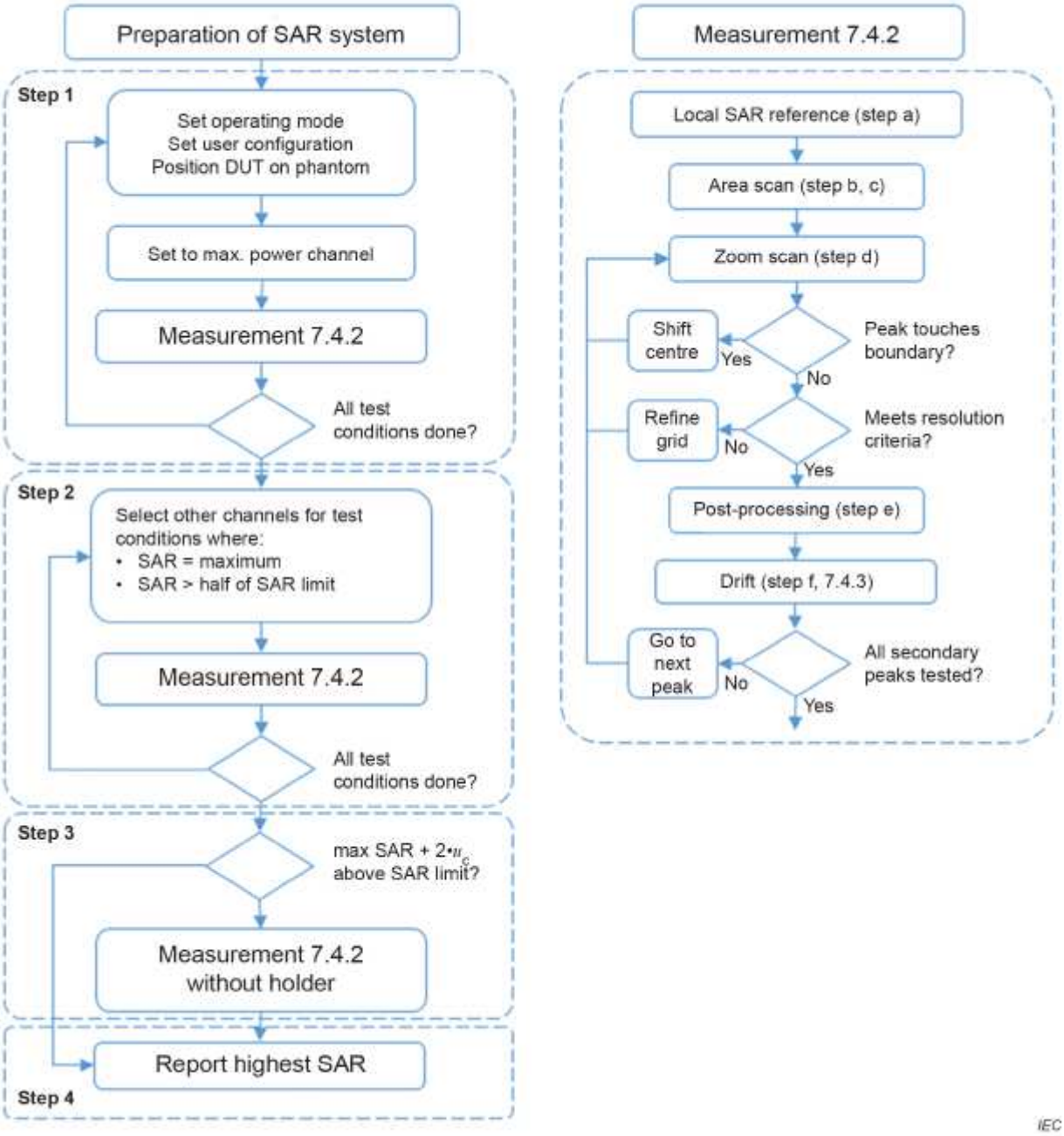

# TEST REPORT

## 6.4. General Device Setup

The device was first charged on a charger over a duration defined by the applicant to make sure the installed battery was fully charged.

The device was then placed into test mode to simulate the worst case configuration through the highest power channel, where the operating parameters established in this test mode is identical to those programmed in production units, including output power levels, amplifier gain settings and other RF performance tuning parameters. The test frequency is corresponded to actual channel frequencies defined for domestic use.

During testing, the device was evaluated with a fully charged battery, power saving function disabled and was configured to operate at maximum output power. A receive antenna and a spectrum analyzer were placed with a distance > 50cm away from the device to monitor the transmission states.

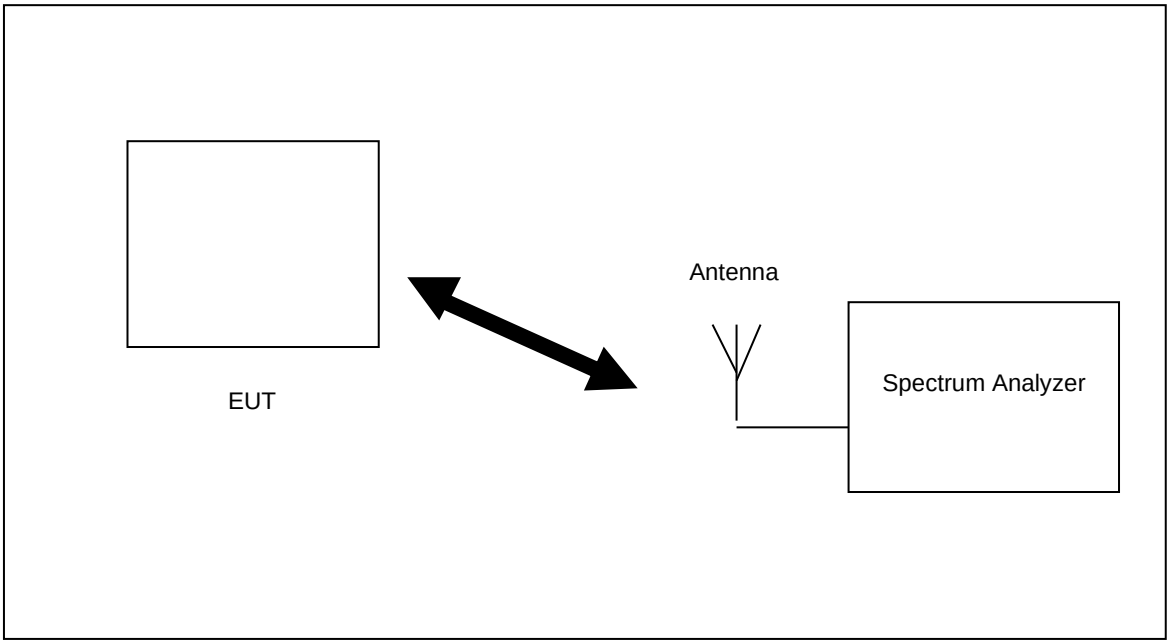

### 6.5. RF Output Power Measurements

| Frequency | Channel | Duty Cycle | Maximum Tune-Up Power (dBm) | Measured Conducted Power (Peak) (dBm) | Measured Conducted Power (Time average) (dBm) |
|---|---|---|---|---|---|
| 2405 | 0 | 9.7% | 20.00 | 18.15 | 8.02 |
| 2439 | 17 | | 20.00 | 18.20 | 8.11 |
| 2475 | 32 | | 20.00 | 18.31 | 8.18 |

Note:

1. Time Average power (dBm) = Peak power (dBm) + Time Average factor.
2. Time Average factor = 10*log(duty cycle).
3. Per KDB 447498, the tested device was within the specified tune-up tolerances range, but not more than 2dB lower than the maximum tune-up tolerance limit.
4. Per KDB 447498, when antenna port was not available on the device to support conducted power measurement and test software was used to establish transmitter power levels, the power level was verified separately according to design and component specifications and product development information specified by the manufacturer.

### 6.6. SAR Test Exclusion Consideration for Adjacent Edges

The Exemption limits for Routine Evaluation – SAR Evaluation in KDB 447498 D01 can be applied to determine SAR test exclusion for adjacent edge configurations.

The test separation distance for SAR test exclusion of adjacent edges is determined by the closest distance between the antenna and outer housing on the adjacent edge of the device.

According to the antenna to outer housing separation distance and maximum time-averaged output power as below, SAR evaluation of **left, right and bottom** edges are not required.
However, client optional decided to keep Front position for data evaluation.

| Exposure Position | Antenna To Outer Housing Separation Distance | Calculated SAR Exemption Limit | Maximum Time-Averaged Conducted Power | SAR Exclusion Result |
|---|---|---|---|---|
| Front | 13 mm | 25 mW | 9.7 mW | Test required[1] |
| Top | 3 mm | 9.5 mW | | Test required |
| Top (antenna extended) | 0 mm | 9.5 mW | | Test required |
| Left | 49 mm | 93.3 mW | | Excluded |
| Left (antenna extended) | 96 mm | 555 mW | | Excluded |
| Right | 9 mm | 17.1 mW | | Excluded |
| Back | 0 mm | 9.5 mW | | Test required |
| Bottom | 30 mm | 57 mW | | Excluded |

1. Client optional decided to keep Front position for data evaluation.

## 6.7. Exposure Conditions

**In-Front-of Mouth Exposure Conditions**

| Test Configurations | Distance to Phantom | Operation Mode | SAR Required | Note |
|---|---|---|---|---|
| Front 0mm Separation | Closed | Data | Yes[1] | |
| Front 0mm Separation | Extended | Data | Yes[1] | |

Note:
2. Client optional decided to keep Front position for data evaluation.
3. Per KDB 447498 D01, SAR Evaluation can be applied to determine SAR test exclusion for adjacent edge configuration.

**Body Exposure Conditions**

| Test Configurations | Distance to Phantom | Operation Mode | SAR Required | Note |
|---|---|---|---|---|
| Front 0mm Separation | Closed | Data | Yes[1] | |
| Top 0mm Separation | Closed | Data | Yes | |
| Left 0mm Separation | Closed | Data | No | SAR test exclusion applied |
| Right 0mm Separation | Closed | Data | Yes | |
| Back 0mm Separation | Closed | Data | Yes | |
| Bottom 0mm Separation | Closed | Data | No | SAR test exclusion applied |
| Front 0mm Separation | Extended | Data | Yes | |
| Top 0mm Separation | Extended | Data | Yes | |
| Left 0mm Separation | Extended | Data | No | SAR test exclusion applied |
| Right 0mm Separation | Extended | Data | Yes | |
| Back 0mm Separation | Extended | Data | Yes | |
| Bottom 0mm Separation | Extended | Data | No | SAR test exclusion applied |

Note:
1. Client optional decided to keep Front position for data evaluation.
2. Per KDB 447498 D01, SAR Evaluation can be applied to determine SAR test exclusion for adjacent edge configuration.

### 6.8. Test Result

The results on the following page(s) were obtained when the device was tested in the condition described in this report. Detailed measurement data and plots, which reveal information about the location of the maximum SAR with respect to the device, are reported in Appendix B.

**In-Front-of Mouth SAR**

| Measurement Result | | | | | | | | | | | |
|---|---|---|---|---|---|---|---|---|---|---|---|
| Chan | Freq. (MHz) | Battery | Mode | Test Position | Maximum Allowed Power (dBm) | Measured Power (dBm) | SAR Drift (%) | Measured $SAR_{1g}$ (W/kg) | Scaling factor | Reported $SAR_{1g}$ (W/kg) | Plot |
| 17 | 2439 | 3.6V | Data | Front 0mm | 20.0 | 18.20 | 0.08 | 0.037 | 1.51 | 0.056 | |
| 17 | 2439 | 3.6V | Data | Front 0mm (antenna extended) | 20.0 | 18.20 | -0.94 | 0.318 | 1.51 | 0.481 | 1 |
| 1 | 2405 | 3.6V | Data | Front 0mm (antenna extended) | 20.0 | 18.15 | 0.04 | 0.305 | 1.53 | 0.467 | |
| 32 | 2475 | 3.6V | Data | Front 0mm (antenna extended) | 20.0 | 18.31 | -0.16 | 0.311 | 1.48 | 0.459 | |

Note:

1. Fully charged batteries were used at the beginning of each SAR measurement.

2. There was no power reduction used for any band/mode implemented in this device.

3. Reported SAR results were scaled to the maximum allowed power with the scaling factor equation -10^[(Maximum power – measured power) / 10].

4. Per KDB 447498 D01, if the reported SAR value was ≤ 0.8 W/kg and the transmission band was ≤ 100MHz, SAR testing was not required for the other test channels in the band.

5. Per KDB 865664 D01, repeated measurement was not required when the original highest measured SAR was < 0.8W/kg.

6. Per KDB 865664 D02, SAR plot is required for the highest measured SAR in each exposure configuration, wireless mode and frequency band combination.

## 6.8. Test Result (Cont'd)

### Body SAR

| Measurement Result | | | | | | | | | | | |
|---|---|---|---|---|---|---|---|---|---|---|---|
| Chan | Freq. (MHz) | Battery | Mode | Test Position | Maximum Allowed Power (dBm) | Measured Power (dBm) | SAR Drift (%) | Measured $SAR_{1g}$ (W/kg) | Scaling factor | Reported $SAR_{1g}$ (W/kg) | Plot |
| 17 | 2439 | 3.7V | Data | Front 0mm | 20.0 | 18.20 | 0.11 | 0.037 | 1.51 | 0.056 | |
| 17 | 2439 | 3.7V | Data | Top 0mm | 20.0 | 18.20 | 0.14 | 0.130 | 1.51 | 0.197 | |
| 17 | 2439 | 3.7V | Data | Back 0mm | 20.0 | 18.20 | -0.09 | 0.297 | 1.51 | 0.450 | |
| 17 | 2439 | 3.7V | Data | Right 0mm | 20.0 | 18.20 | -0.18 | 0.029 | 1.51 | 0.044 | |
| 17 | 2439 | 3.7V | Data | Front 0mm (antenna extended) | 20.0 | 18.20 | -0.94 | 0.318 | 1.51 | 0.481 | |
| 17 | 2439 | 3.7V | Data | Top 0mm (antenna extended) | 20.0 | 18.20 | 0.10 | 0.071 | 1.51 | 0.107 | |
| 17 | 2439 | 3.7V | Data | Back 0mm (antenna extended) | 20.0 | 18.20 | -0.05 | 0.328 | 1.51 | 0.496 | |
| 17 | 2439 | 3.7V | Data | Right 0mm (antenna extended) | 20.0 | 18.20 | -0.20 | 0.337 | 1.51 | 0.510 | 2 |
| 1 | 2405 | 3.7V | Data | Right 0mm (antenna extended) | 20.0 | 18.15 | -0.07 | 0.138 | 1.53 | 0.211 | |
| 32 | 2475 | 3.7V | Data | Right 0mm (antenna extended) | 20.0 | 18.31 | 0.23 | 0.338 | 1.48 | 0.499 | |

## TEST REPORT

Note:

1. Fully charged batteries were used at the beginning of each SAR measurement.

2. There was no power reduction used for any band/mode implemented in this device.

3. Reported SAR results were scaled to the maximum allowed power with the scaling factor equation -10^[(Maximum power – measured power) / 10].

4. Per KDB 447498 D01, when the maximum output power variation across the required test channels was < 0.5 dB, measurement on middle channel was required.

5. Per KDB 865664 D01, repeated measurement was not required when the original highest measured SAR was < 0.8W/kg.

6. Per KDB 865664 D02, SAR plot is required for the highest measured SAR in each exposure configuration, wireless mode and frequency band combination.

### 6.9. SAR Limits

The following FCC limits (Std. C95.1-1992) for SAR apply to devices operate in General Population/ Uncontrolled Exposure and Controlled environment:

**GENERAL POPULATION / UNCONTROLLED ENVIRONMENTS:**
Defined as location where there is the exposure of individuals who have no knowledge or control of their exposure.

| EXPOSURE (General Population/Uncontrolled Exposure environment) | SAR (W/kg) |
|---|---|
| Spatial Peak SAR (Head)* | 1.60 |
| Spatial Peak SAR (Partial Body)* | 1.60 |
| Spatial Peak SAR (Whole Body)* | 0.08 |
| Spatial Peak SAR (Hands / Wrists / Feet / Ankles)** | 4.00 |

**OCCUPATIONAL / CONTROLLED ENVIRONMENTS:**
Defined as location where there is the exposure that may be incurred by persons who are aware of the potential for exposure, (i.e. as a result of employment or occupation)

| EXPOSURE (Occupational/Controlled Exposure environment) | SAR (W/kg) |
|---|---|
| Spatial Peak SAR (Head)* | 8.00 |
| Spatial Peak SAR (Partial Body)* | 8.00 |
| Spatial Peak SAR (Whole Body)* | 0.40 |
| Spatial Peak SAR (Hands / Wrists / Feet / Ankles)** | 20.00 |

Notes:

* The Spatial Peak value of the SAR averaged over any 1 gram of tissue.
(defined as a tissue volume in the shape of a cube) and over the appropriate averaging time

** The Spatial Peak value of the SAR averaged over any 10 gram of tissue.
(defined as a tissue volume in the shape of a cube) and over the appropriate averaging time

## 7. TEST EQUIPMENT LIST

| Equipment | Registration No. | Manufacturer | Model No. | Calibration Date | Calibration Due Date |
|---|---|---|---|---|---|
| SAR System | EW-3211 | MVG | SATIMO System (OpenSAR Software V4_02_34) | N/A | N/A |
| Phantom | EW-3211 | SATIMO | COMOSAR SAM PHANTOM | N/A | N/A |
| Digital Multimeter | EW-3206 | KEITHLEY | 2000 | 27 Jul 2021 | 27 Jul 2022 |
| SAR Probe | EW-3210 | MVG | SSE2 (SN 36/20 EPGO347) | 02 Nov 2021 | 02 Nov 2022 |
| SAR Dipole | EW-3212 | MVG | SN 22/16 DIP2G450-411 | 02 Nov 2021 | 02 Nov 2024 |
| Dielectric Probe for SAR Test | EW-3213 | MVG | Liquid Measurement Kit (SN 24/16 OCPG 76) | 02 Nov 2021 | 02 Nov 2022 |
| Head Liquid Tissue | N/A | MVG | Head Liquid 2450MHz | Refer to Section 4 | |
| Body Liquid Tissue | N/A | MVG | Body Liquid 2450MHz | Refer to Section 4 | |
| Network Analyzer | EW-3192 | Rhode & Schwarz | ZVL6 | 27 Jul 2021 | 27 Jul 2022 |
| Vector Signal Generator | EW-3063 | ROHDESCHWARZ | SMBV100A | 24 Jul 2021 | 24 Jul 2022 |
| Plastic Ruler | EW-3084 | MUJI | 30cm | 23 Jan 2022 | 23 Jan 2023 |
| Signal and Spectrum Analyzer (10Hz to 40GHz) | EW-3016 | Rhode & Schwarz | FSV40 | 29 Oct 2021 | 29 Oct 2022 |
| Precision Dual Coupler (0.8-3GHz 20dB) | EW-3184 | VectaWave USA | VDC0830-20 | 30 Nov 2021 | 30 Nov 2022 |
| Wideband power sensor 2 pcs 50MHz to 18GHz | EW-3309 | ROHDESCHWARZ | NRP-Z81 | 01 Dec 2021 | 01 Dec 2022 |
| SAR Amplifier | EW-3275 | MVG | 0.4-6GHz | 11 Nov 2021 | 11 Nov 2022 |
| Thermo-HyGrometer | EW-3046 | Oregon Scientific | THG312 | 07 Aug 2021 | 07 Aug 2022 |
| Digital Thermo-Meter For SAR test | EW-2901 | TES | 1306 | 08 Dec 2021 | 08 Dec 2022 |

# 8. MEASUREMENT UNCERTAINTY

Per FCC KDB 865884, the extensive SAR measurement uncertainty analysis was not required when the highest measured SAR was < 1.5W/kg for all frequency band.

# TEST REPORT

## TABLE 1 EXPOSURE ASSESSMENT UNCERTAINTY FOR HEAD SAR

| Uncertainty Component | Tol. (± %) | Prob. Dist. | Div. | $c_i$ (1 g) | $c_i$ (10 g) | 1 g $u_i$ (± %) | 10 g $u_i$ (± %) | $v_i$ |
|---|---|---|---|---|---|---|---|---|
| **Measurement System** | | | | | | | | |
| Probe Calibration | 5.8 | N | 1 | 1 | 1 | 5.8 | 5.8 | ∞ |
| Axial Isotropy | 3.5 | R | √3 | √0.5 | √0.5 | 1.43 | 1.43 | ∞ |
| Hemispherical Isotropy | 5.9 | R | √3 | √0.5 | √0.5 | 2.41 | 2.41 | ∞ |
| Boundary Effect | 1 | R | √3 | 1 | 1 | 0.58 | 0.58 | ∞ |
| Linearity | 4.7 | R | √3 | 1 | 1 | 2.71 | 2.71 | ∞ |
| System Detection Limits | 1 | R | √3 | 1 | 1 | 0.58 | 0.58 | ∞ |
| Modulation response | 3 | R | √3 | 1 | 1 | 1.73 | 1.73 | ∞ |
| Readout Electronics | 0.5 | N | 1 | 1 | 1 | 0.50 | 0.50 | ∞ |
| Response Time | 0 | R | √3 | 1 | 1 | 0.00 | 0.00 | ∞ |
| Integration Time | 1.4 | R | √3 | 1 | 1 | 0.81 | 0.81 | ∞ |
| RF Ambient Conditions - Noise | 3 | R | √3 | 1 | 1 | 1.73 | 1.73 | ∞ |
| RF Ambient Conditions - Reflections | 3 | R | √3 | 1 | 1 | 1.73 | 1.73 | ∞ |
| Probe Positioner Mechanical Tolerance | 1.4 | R | √3 | 1 | 1 | 0.81 | 0.81 | ∞ |
| Probe Positioning with respect to Phantom Shell | 1.4 | R | √3 | 1 | 1 | 0.81 | 0.81 | ∞ |
| Extrapolation, interpolation and Integration Algorithms for Max. SAR Evaluation | 2.3 | R | √3 | 1 | 1 | 1.33 | 1.33 | ∞ |
| **Test sample Related** | | | | | | | | |
| Test Sample Positioning | 2.6 | N | 1 | 1 | 1 | 2.60 | 2.60 | 11 |
| Device Holder Uncertainty | 3 | N | 1 | 1 | 1 | 3.00 | 3.00 | 7 |
| Output Power Variation - SAR drift measurement | 5 | R | √3 | 1 | 1 | 2.89 | 2.89 | ∞ |
| SAR scaling | 2 | R | √3 | 1 | 1 | 1.15 | 1.15 | ∞ |
| **Phantom and Tissue Parameters** | | | | | | | | |
| Phantom Shell Uncertainty - Shape, Thickness and Permittivity | 4 | R | √3 | 1 | 1 | 2.31 | 2.31 | ∞ |
| Uncertainty in SAR correction for deviation in permittivity and conductivity | 2 | N | 1 | 1 | 0.84 | 2.00 | 1.68 | ∞ |
| Liquid Conductivity Measurement | 4 | N | 1 | 0.78 | 0.71 | 3.12 | 2.84 | 5 |
| Liquid Permittivity Measurement | 5 | N | 1 | 0.23 | 0.26 | 1.15 | 1.30 | 5 |
| Liquid Conductivity - Temperature Uncertainty | 2.5 | R | √3 | 0.78 | 0.71 | 1.13 | 1.02 | ∞ |
| Liquid Permittivity - Temperature Uncertainty | 2.5 | R | √3 | 0.23 | 0.26 | 0.33 | 0.38 | ∞ |
| **Combined Standard Uncertainty** | | RSS | | | | 10.47 | 10.34 | |
| **Expanded Uncertainty (95% CONFIDENCE INTERVAL)** | | k | | | | 20.95 | 20.69 | |

# TEST REPORT

## TABLE 2 SYSTEM VALIDATION FOR HEAD LIQUID

| Uncertainty Component | Tol. (± %) | Prob. Dist. | Div. | $c_i$ (1 g) | $c_i$ (10 g) | 1 g $u_i$ (± %) | 10 g $u_i$ (± %) | $v_i$ |
|---|---|---|---|---|---|---|---|---|
| **Measurement System** | | | | | | | | |
| Probe Calibration | 5.8 | N | 1 | 1 | 1 | 5.80 | 5.80 | ∞ |
| Axial Isotropy | 3.5 | R | √3 | 1 | 1 | 2.02 | 2.02 | ∞ |
| Hemispherical Isotropy | 5.9 | R | √3 | 0 | 0 | 0.00 | 0.00 | ∞ |
| Boundary Effect | 1 | R | √3 | 1 | 1 | 0.58 | 0.58 | ∞ |
| Linearity | 4.7 | R | √3 | 1 | 1 | 2.71 | 2.71 | ∞ |
| System Detection Limits | 1 | R | √3 | 1 | 1 | 0.58 | 0.58 | ∞ |
| Modulation response | 0 | N | √3 | 0 | 0 | 0.00 | 0.00 | ∞ |
| Readout Electronics | 0.5 | N | 1 | 1 | 1 | 0.50 | 0.50 | ∞ |
| Response Time | 0 | R | √3 | 0 | 0 | 0.00 | 0.00 | ∞ |
| Integration Time | 1.4 | R | √3 | 0 | 0 | 0.00 | 0.00 | ∞ |
| RF Ambient Conditions - Noise | 3 | R | √3 | 1 | 1 | 1.73 | 1.73 | ∞ |
| RF Ambient Conditions - Reflections | 3 | R | √3 | 1 | 1 | 1.73 | 1.73 | ∞ |
| Probe Positioner Mechanical Tolerance | 1.4 | R | √3 | 1 | 1 | 0.81 | 0.81 | ∞ |
| Probe Positioning with respect to Phantom Shell | 1.4 | R | √3 | 1 | 1 | 0.81 | 0.81 | ∞ |
| Extrapolation, interpolation and Integration Algorithms for Max. SAR Evaluation | 2.3 | R | √3 | 1 | 1 | 1.33 | 1.33 | ∞ |
| **Dipole** | | | | | | | | |
| Deviation of experimental source from numerical source | 5 | N | 1 | 1 | 1 | 5.00 | 5.00 | ∞ |
| Input Power and SAR drift measurement | 0.5 | R | √3 | 1 | 1 | 0.29 | 0.29 | ∞ |
| Dipole Axis to Liquid Distance | 2 | R | √3 | 1 | 1 | 1.15 | 1.15 | ∞ |
| **Phantom and Tissue Parameters** | | | | | | | | |
| Phantom Shell Uncertainty - Thickness and Permittivity | 4 | R | √3 | 1 | 1 | 2.31 | 2.31 | ∞ |
| Uncertainty in SAR correction for deviation in permittivity and conductivity | 2 | N | 1 | 1 | 0.84 | 2.00 | 1.68 | ∞ |
| Liquid Conductivity Measurement | 4 | N | 1 | 0.78 | 0.71 | 3.12 | 2.84 | 5 |
| Liquid Permittivity Measurement | 5 | N | 1 | 0.23 | 0.26 | 1.15 | 1.30 | 5 |
| Liquid Conductivity - Temperature Uncertainty | 2.5 | R | √3 | 0.78 | 0.71 | 1.13 | 1.02 | ∞ |
| Liquid Permittivity - Temperature Uncertainty | 2.5 | R | √3 | 0.23 | 0.26 | 0.33 | 0.38 | ∞ |
| **Combined Standard Uncertainty** | | RSS | | | | 10.16 | 10.03 | |
| **Expanded Uncertainty (95% CONFIDENCE INTERVAL)** | | k | | | | 20.32 | 20.06 | |

# TEST REPORT

## TABLE 3 EXPOSURE ASSESSMENT UNCERTAINTY FOR BODY SAR

| Uncertainty Component | Tol. (± %) | Prob. Dist. | Div. | $c_i$ (1 g) | $c_i$ (10 g) | 1 g $u_i$ (± %) | 10 g $u_i$ (± %) | $v_i$ |
|---|---|---|---|---|---|---|---|---|
| **Measurement System** | | | | | | | | |
| Probe Calibration | 5.8 | N | 1 | 1 | 1 | 5.8 | 5.8 | ∞ |
| Axial Isotropy | 3.5 | R | √3 | √0.5 | √0.5 | 1.43 | 1.43 | ∞ |
| Hemispherical Isotropy | 5.9 | R | √3 | √0.5 | √0.5 | 2.41 | 2.41 | ∞ |
| Boundary Effect | 1 | R | √3 | 1 | 1 | 0.58 | 0.58 | ∞ |
| Linearity | 4.7 | R | √3 | 1 | 1 | 2.71 | 2.71 | ∞ |
| System Detection Limits | 1 | R | √3 | 1 | 1 | 0.58 | 0.58 | ∞ |
| Modulation response | 3 | R | √3 | 1 | 1 | 1.73 | 1.73 | ∞ |
| Readout Electronics | 0.5 | N | 1 | 1 | 1 | 0.50 | 0.50 | ∞ |
| Response Time | 0 | R | √3 | 1 | 1 | 0.00 | 0.00 | ∞ |
| Integration Time | 1.4 | R | √3 | 1 | 1 | 0.81 | 0.81 | ∞ |
| RF Ambient Conditions - Noise | 3 | R | √3 | 1 | 1 | 1.73 | 1.73 | ∞ |
| RF Ambient Conditions - Reflections | 3 | R | √3 | 1 | 1 | 1.73 | 1.73 | ∞ |
| Probe Positioner Mechanical Tolerance | 1.4 | R | √3 | 1 | 1 | 0.81 | 0.81 | ∞ |
| Probe Positioning with respect to Phantom Shell | 1.4 | R | √3 | 1 | 1 | 0.81 | 0.81 | ∞ |
| Extrapolation, interpolation and Integration Algorithms for Max. SAR Evaluation | 2.3 | R | √3 | 1 | 1 | 1.33 | 1.33 | ∞ |
| **Test sample Related** | | | | | | | | |
| Test Sample Positioning | 2.6 | N | 1 | 1 | 1 | 2.60 | 2.60 | 11 |
| Device Holder Uncertainty | 3 | N | 1 | 1 | 1 | 3.00 | 3.00 | 7 |
| Output Power Variation - SAR drift measurement | 5 | R | √3 | 1 | 1 | 2.89 | 2.89 | ∞ |
| SAR scaling | 2 | R | √3 | 1 | 1 | 1.15 | 1.15 | ∞ |
| **Phantom and Tissue Parameters** | | | | | | | | |
| Phantom Shell Uncertainty - Shape, Thickness and Permittivity | 4 | R | √3 | 1 | 1 | 2.31 | 2.31 | ∞ |
| Uncertainty in SAR correction for deviation in permittivity and conductivity | 2 | N | 1 | 1 | 0.84 | 2.00 | 1.68 | ∞ |
| Liquid Conductivity Measurement | 4 | N | 1 | 0.78 | 0.71 | 3.12 | 2.84 | 5 |
| Liquid Permittivity Measurement | 5 | N | 1 | 0.23 | 0.26 | 1.15 | 1.30 | 5 |
| Liquid Conductivity - Temperature Uncertainty | 2.5 | R | √3 | 0.78 | 0.71 | 1.13 | 1.02 | ∞ |
| Liquid Permittivity - Temperature Uncertainty | 2.5 | R | √3 | 0.23 | 0.26 | 0.33 | 0.38 | ∞ |
| **Combined Standard Uncertainty** | | RSS | | | | 10.47 | 10.34 | |
| **Expanded Uncertainty (95% CONFIDENCE INTERVAL)** | | k | | | | 20.95 | 20.69 | |

# TEST REPORT

## TABLE 4 SYSTEM VALIDATION FOR BODY LIQUID

| Uncertainty Component | Tol. (± %) | Prob. Dist. | Div. | $c_i$ (1 g) | $c_i$ (10 g) | 1 g $u_i$ (± %) | 10 g $u_i$ (± %) | $v_i$ |
|---|---|---|---|---|---|---|---|---|
| **Measurement System** | | | | | | | | |
| Probe Calibration | 5.8 | N | 1 | 1 | 1 | 5.80 | 5.80 | ∞ |
| Axial Isotropy | 3.5 | R | √3 | 1 | 1 | 2.02 | 2.02 | ∞ |
| Hemispherical Isotropy | 5.9 | R | √3 | 0 | 0 | 0.00 | 0.00 | ∞ |
| Boundary Effect | 1 | R | √3 | 1 | 1 | 0.58 | 0.58 | ∞ |
| Linearity | 4.7 | R | √3 | 1 | 1 | 2.71 | 2.71 | ∞ |
| System Detection Limits | 1 | R | √3 | 1 | 1 | 0.58 | 0.58 | ∞ |
| Modulation response | 0 | N | √3 | 0 | 0 | 0.00 | 0.00 | ∞ |
| Readout Electronics | 0.5 | N | 1 | 1 | 1 | 0.50 | 0.50 | ∞ |
| Response Time | 0 | R | √3 | 0 | 0 | 0.00 | 0.00 | ∞ |
| Integration Time | 1.4 | R | √3 | 0 | 0 | 0.00 | 0.00 | ∞ |
| RF Ambient Conditions - Noise | 3 | R | √3 | 1 | 1 | 1.73 | 1.73 | ∞ |
| RF Ambient Conditions - Reflections | 3 | R | √3 | 1 | 1 | 1.73 | 1.73 | ∞ |
| Probe Positioner Mechanical Tolerance | 1.4 | R | √3 | 1 | 1 | 0.81 | 0.81 | ∞ |
| Probe Positioning with respect to Phantom Shell | 1.4 | R | √3 | 1 | 1 | 0.81 | 0.81 | ∞ |
| Extrapolation, interpolation and Integration Algorithms for Max. SAR Evaluation | 2.3 | R | √3 | 1 | 1 | 1.33 | 1.33 | ∞ |
| **Dipole** | | | | | | | | |
| Deviation of experimental source from numerical source | 5 | N | 1 | 1 | 1 | 5.00 | 5.00 | ∞ |
| Input Power and SAR drift measurement | 0.5 | R | √3 | 1 | 1 | 0.29 | 0.29 | ∞ |
| Dipole Axis to Liquid Distance | 2 | R | √3 | 1 | 1 | 1.15 | 1.15 | ∞ |
| **Phantom and Tissue Parameters** | | | | | | | | |
| Phantom Shell Uncertainty - Thickness and Permittivity | 4 | R | √3 | 1 | 1 | 2.31 | 2.31 | ∞ |
| Uncertainty in SAR correction for deviation in permittivity and conductivity | 2 | N | 1 | 1 | 0.84 | 2.00 | 1.68 | ∞ |
| Liquid Conductivity Measurement | 4 | N | 1 | 0.78 | 0.71 | 3.12 | 2.84 | 5 |
| Liquid Permittivity Measurement | 5 | N | 1 | 0.23 | 0.26 | 1.15 | 1.30 | 5 |
| Liquid Conductivity - Temperature Uncertainty | 2.5 | R | √3 | 0.78 | 0.71 | 1.13 | 1.02 | ∞ |
| Liquid Permittivity - Temperature Uncertainty | 2.5 | R | √3 | 0.23 | 0.26 | 0.33 | 0.38 | ∞ |
| **Combined Standard Uncertainty** | | RSS | | | | 10.16 | 10.03 | |
| **Expanded Uncertainty (95% CONFIDENCE INTERVAL)** | | k | | | | 20.32 | 20.06 | |

**TEST REPORT**

# 9. E-FIELD PROBE AND DIPOLE ANTENNA CALIBRATION

Probe calibration factors and dipole antenna calibration are included in Appendix C.

# TEST REPORT

## APPENDIX A – SYSTEM CHECK DATA

Plot #1

Operating Frequency: 2450MHz
Test Date: July 13, 2022

| | | |
|---|---|---|
| Medium (Liquid Type) | : | 2450 Head |
| Relative permittivity εr | : | 39.23 |
| Conductivity σ: | : | 1.84 |
| Probe | : | Model: SSE2; Serial No.: SN 36/20 EPGO347 |
| Crest factor | : | 1.0 |
| Conversion Factor | : | 2.36 |
| Area Scan | : | dx=8mm, dy=8mm |
| Zoom Scan | : | 7x7x7,dx=5mm dy=5mm dz=5mm |
| Phantom | : | SAM phantom |
| Device Position | : | Dipole |
| SAR Drift (%) | : | -0.52% |
| Maximum location | : | X=-5.00, Y=0.00 |
| SAR Peak (W/kg) | : | 10.65 W/kg |
| SAR 10g (W/kg) | : | 2.452929 W/kg |
| SAR 1g (W/kg) | : | 5.676179 W/kg |

**SURFACE SAR**

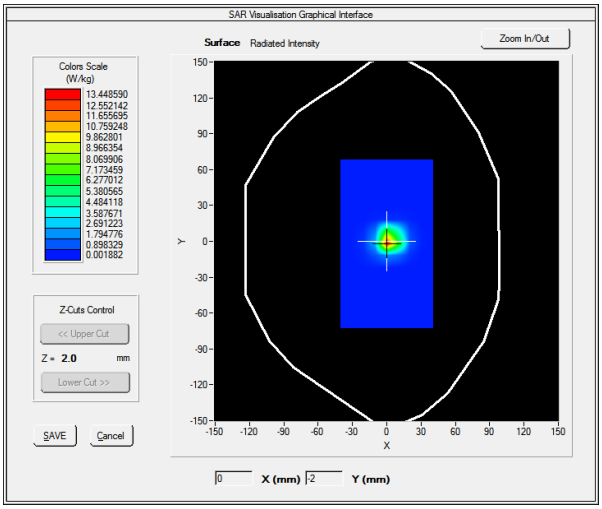


**VOLUME SAR**

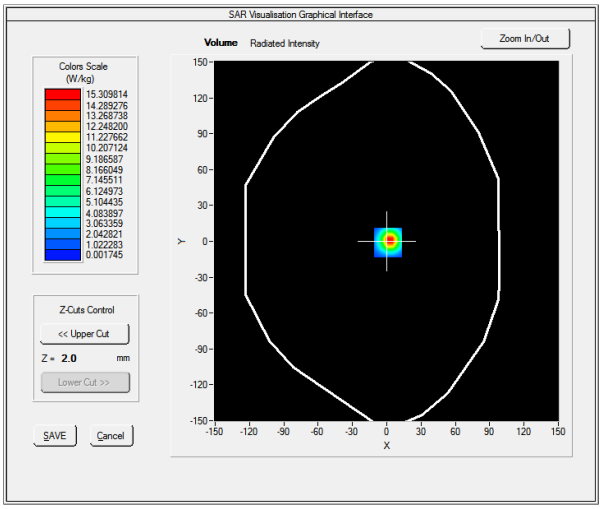

# TEST REPORT

## APPENDIX B – SAR EVALUATION DATA

Plot #1

Operating Frequency: 2439MHz
Product Description: Video Monitor - Parent Unit
Model: VM3258 PU, VM3258-2 PU, VM3258-ab PU, VM3262 PU, VM3262-2 PU, VM3262-ab PU, VM923 PU, VM923-2 PU, VM923-ab PU
(3.6VDC (1 x 3.6V 2700mAh Ni-MH rechargeable battery))
Test Date: July 13, 2022

| | | |
|---|---|---|
| Medium (Liquid Type) | : | 2450 Head |
| Relative permittivity εr | : | 39.23 |
| Conductivity σ: | : | 1.84 |
| Probe | : | Model: SSE2; Serial No.: SN 36/20 EPGO347 |
| Crest factor | : | 0.097 |
| Conversion Factor | : | 2.36 |
| Area Scan | : | dx=8mm, dy=8mm |
| Zoom Scan | : | 7x7x7,dx=5mm dy=5mm dz=5mm |
| Phantom | : | SAM phantom |
| Device Position | : | front 0mm separation (antenna extended) |
| SAR Drift (%) | : | -0.94% |
| Maximum location | : | X=-28.00, Y=14.00 |
| SAR Peak (W/kg) | : | 0.56 W/kg |
| SAR 10g (W/kg) | : | 0.161 W/kg |
| SAR 1g (W/kg) | : | 0.318 W/kg |

**SURFACE SAR**

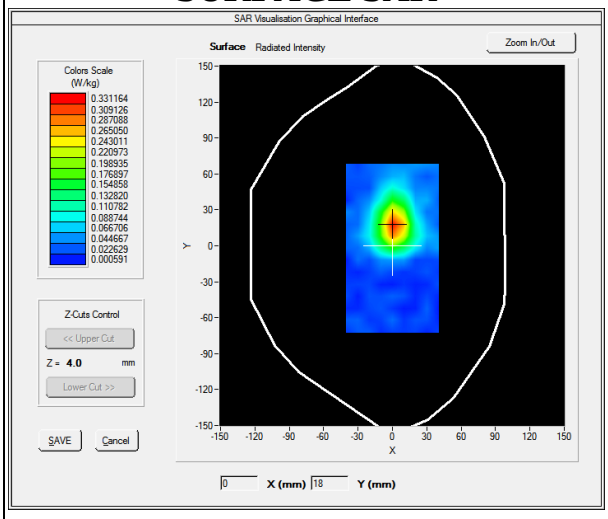


**VOLUME SAR**

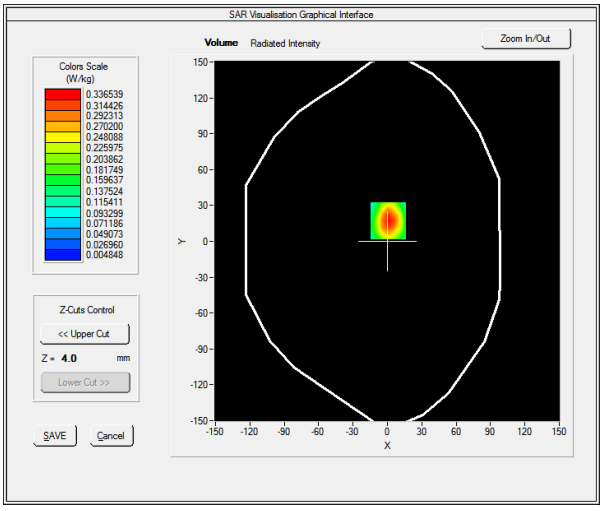

# TEST REPORT

## APPENDIX B – SAR EVALUATION DATA

Plot #2

Operating Frequency: 2439MHz
Product Description: Video Monitor - Parent Unit
Model: VM3258 PU, VM3258-2 PU, VM3258-ab PU, VM3262 PU, VM3262-2 PU, VM3262-ab PU, VM923 PU, VM923-2 PU, VM923-ab PU
(3.6VDC (1 x 3.6V 2600mAh Ni-MH rechargeable battery))
Test Date: July 13, 2022

| | | |
|---|---|---|
| Medium (Liquid Type) | : | 2450 Head |
| Relative permittivity εr | : | 39.23 |
| Conductivity σ: | : | 1.85 |
| Probe | : | Model: SSE2; Serial No.: SN 36/20 EPGO347 |
| Crest factor | : | 0.097 |
| Conversion Factor | : | 2.36 |
| Area Scan | : | dx=8mm, dy=8mm |
| Zoom Scan | : | 7x7x7,dx=5mm dy=5mm dz=5mm |
| Phantom | : | SAM phantom |
| Device Position | : | Right 0mm separation (antenna extended) |
| SAR Drift (%) | : | -0.20% |
| Maximum location | : | X=-28.00, Y=14.00 |
| SAR Peak (W/kg) | : | 0.59 W/kg |
| SAR 10g (W/kg) | : | 0.171 W/kg |
| SAR 1g (W/kg) | : | 0.337 W/kg |

**SURFACE SAR**

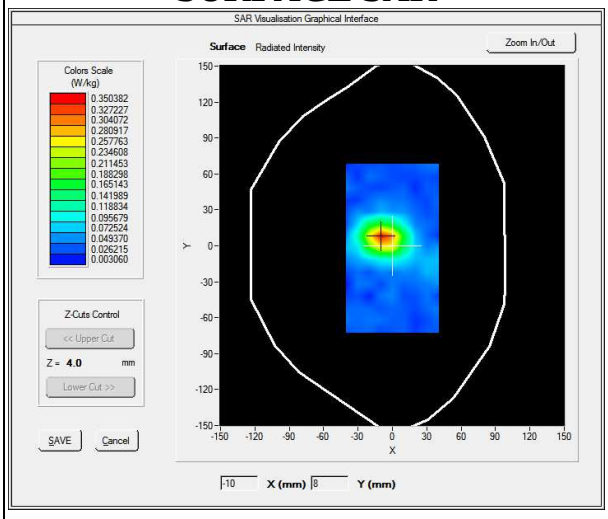


**VOLUME SAR**

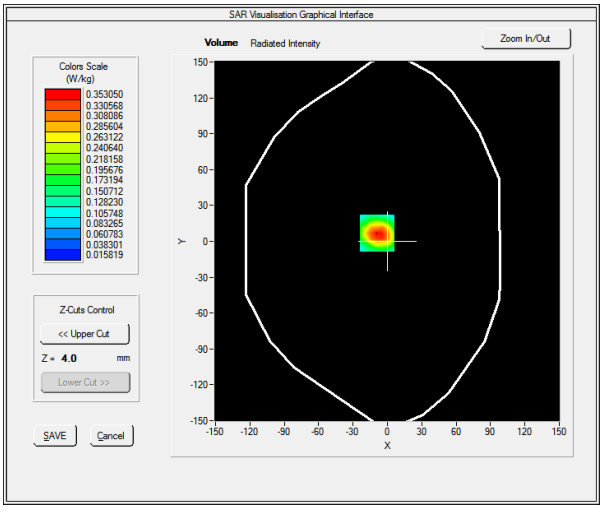

# TEST REPORT

## APPENDIX C – E-FIELD PROBE AND DIPOLE ANTENNA CALIBRATION

# TEST REPORT

## APPENDIX D – SAR SYSTEM VALIDATION

Per KDB 865664, SAR system validation status should be documented to confirm measurement accuracy. SAR measurement systems are validated according to procedures in KDB 865664. The validation status is documented according to the validation date(s), measurement frequencies, SAR probe and tissue dielectric parameters. When multiple SAR system is used, the validation status of each SAR system is needed to be documented separately according to the associated system components.

A tabulated summary of the system validation status including the validation date(s), measurement frequencies, SAR probe and tissue dielectric parameters are shown as below.

| | | | | | | CW Validation | | | Mod. Validation | | |
|---|---|---|---|---|---|---|---|---|---|---|---|
| **Date** | **Probe S/N** | **Tested Freq. (MHz)** | **Tissue Type** | **Perm** | **Cond** | **Sensitivity** | **Probe Linearity** | **Probe Isotropy** | **Mod. Type** | **Duty Factor** | **Peak to average power ratio** |
| 20/11/2021 | EPGO 347 | 2450 | Head | 38.92 | 1.86 | PASS | PASS | PASS | FHSS | PASS | PASS |
| 20/11/2021 | EPGO 347 | 2450 | Body | 51.64 | 1.99 | PASS | PASS | PASS | FHSS | PASS | PASS |
| 20/11/2021 | EPGO 347 | 2450 | Head | 38.92 | 1.86 | PASS | PASS | PASS | OFDM | N/A | PASS |
| 20/11/2021 | EPGO 347 | 2450 | Body | 51.64 | 1.99 | PASS | PASS | PASS | OFDM | N/A | PASS |
| 20/11/2021 | EPGO 347 | 2450 | Head | 38.92 | 1.86 | PASS | PASS | PASS | DSSS | PASS | N/A |
| 20/11/2021 | EPGO 347 | 2450 | Body | 51.64 | 1.99 | PASS | PASS | PASS | DSSS | PASS | N/A |