Important Safety Instructions

When using your telephone equipment, basic safety precautions should always be followed to reduce the risk of fire, electric shock and injury, including the following:

1. Read and understand all instructions.
2. Follow all warnings and instructions marked on the product.
3. Unplug this product from the wall outlet before cleaning. Do not use liquid cleaners or aerosol cleaners. Use a damp cloth for cleaning.
4. Do not use this product near water (for example, near a bath tub, kitchen sink, or swimming pool).
4. Do not place this product on an unstable cart, stand, or table. The product may fall, causing serious damage to the product.

5. Do not place this product on an unstable cart, stand, or table. The product may fall, causing serious damage to the product.
6. Slots and openings in the cabinet and the back or bottom are provided for ventilation. To protect it from overheating, these openings must not be blocked by placing the product on the bed, sofa, rug, or other similar surface. This product should never be placed near or over a radiator or heat register. This product should not be placed in a built-in installation where proper ventilation is not provided.
7. This product should be operated only from the type of power source indicated on the marking label. If you are not sure of the type of power supply to your home, consult your dealer or local power company.
8. Do not allow anything to rest on the power cord. Do not locate this product where the cord will be abused by persons walking on it.
9. Never push objects of any kind into this product through cabinet slots as they may touch dangerous voltage points or short out parts that could result in a risk of fire or electric shock. Never spill liquid of any kind on the product.
10. To reduce the risk of electric shock, do not disassemble this product, but take it to an authorized service facility. Opening or removing cabinet parts other than specified access doors may expose you to dangerous voltages or other risks. Incorrect reassembling can cause electric shock when the appliance is subsequently used.
11. Do not overload wall outlets and extension cords as this can result in the risk of fire or electric shock.
12. Unplug this product from the wall outlet and contact VTECH under the following conditions:
    A. When the power supply cord or plug is damaged or frayed.
    B. If liquid has been spilled into the product.
    C. If the product has been exposed to rain or water.
    D. If the product does not operate normally by following the operating instructions. Adjust only those controls that are covered by the operating instructions, because improper adjustment of other controls may result in damage and will often require extensive work to restore the product to normal operation.
    E. If the product has been dropped and the cabinet has been damaged.
    F. If the product exhibits a distinct change in performance.

13. Avoid using a telephone (other than a cordless type) during an electrical storm. There may be a remote risk of electric shock from lightning.
14. Do not use this or any cordless telephone to report a gas leak in the vicinity of the leak.

If you have questions about this product, or if you're having difficulty with setup or operation, do not return your phone to the store. Call our Customer Support Center at

1-800-595-9511

In Canada, call

1-800-267-7377

SAVE THESE INSTRUCTIONS

Introduction

This is an advanced cordless telephone, capable of supporting 2 Handsets. This manual is designed to familiarize you with this cordless telephone. We strongly recommend you read the manual before using your phone.

STOP!!

If you have questions about this product, or if you're having difficulty with setup or operation, do not return your phone to the store. Call our Customer Support Center at 1-800-595-9511 In Canada, call 1-800-267-7377

Parts Check List

1. Base Unit
2. Handset
3. Handset Charger
4. Base AC Power Adapter
5. Telephone Line Cord
6. Belt Clip
7. Base Wall Mounting Bracket
8. Charger Wall Mounting Bracket
9. Owner's Manual
10. 6 AAA Cells

To purchase replacement battery cells, call VTech Communications, Inc. at 1-800-595-9511. In Canada, call VTech Telecommunications Canada Ltd. at 1-800-267-7377.

Note: Use only VTech batteries P/N 80-5380-00-00 or equivalent AAA NiMH rechargeable batteries.

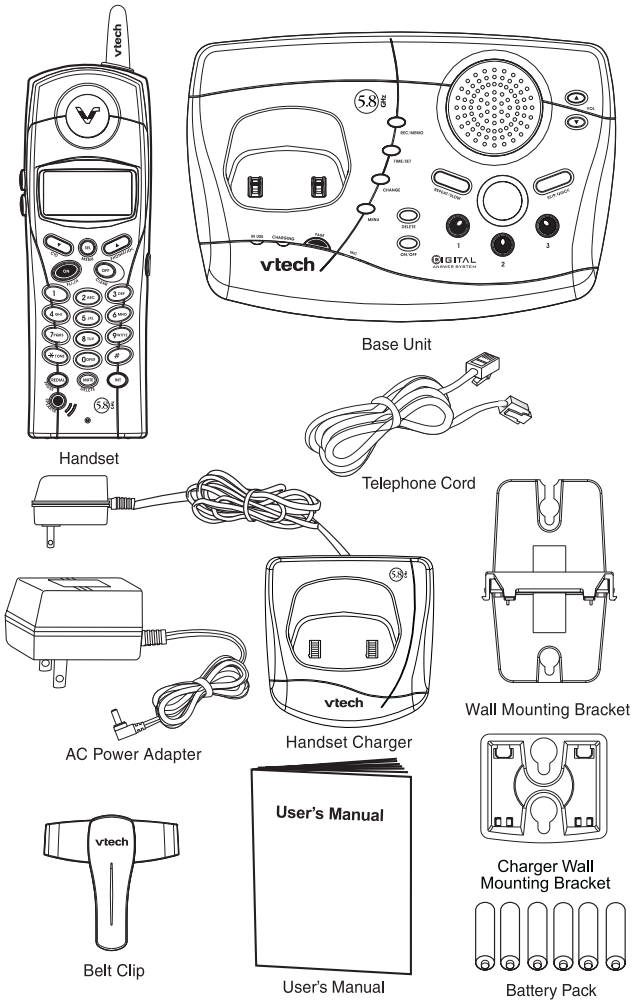

The Handset Layout

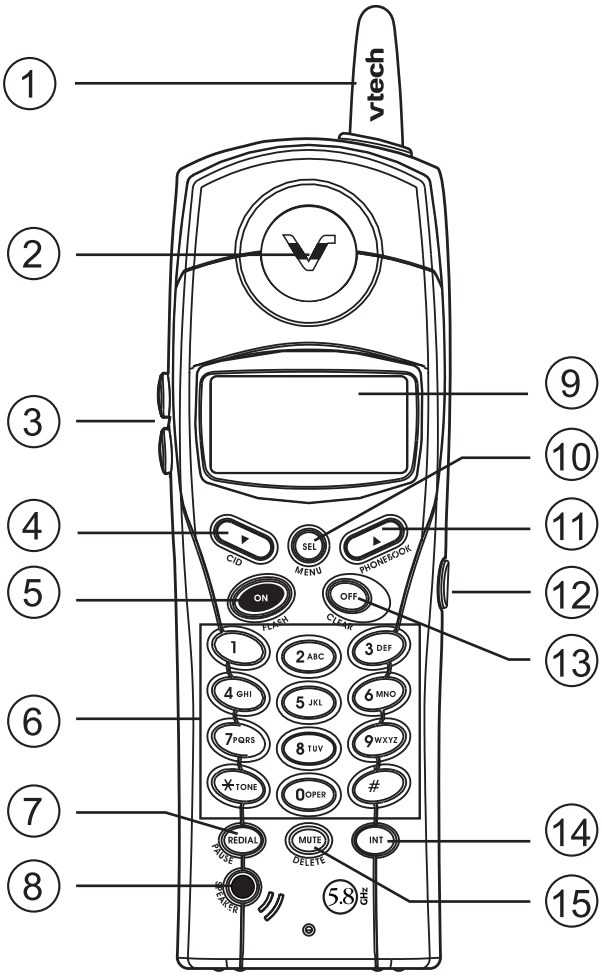

1. Antenna
2. Earpiece
3. Volume Control
4. CID
5. On (Flash)
6. Dialing Keys (0-9, *, #)
7. Redial (Pause)
8. Speakerphone
9. LCD Display
10. Select (Menu)
11. Phonebook
12. Headset jack (2.5mm)
13. Off (Clear)
14. Intercom
15. Mute (Delete)

The Base Unit Layout

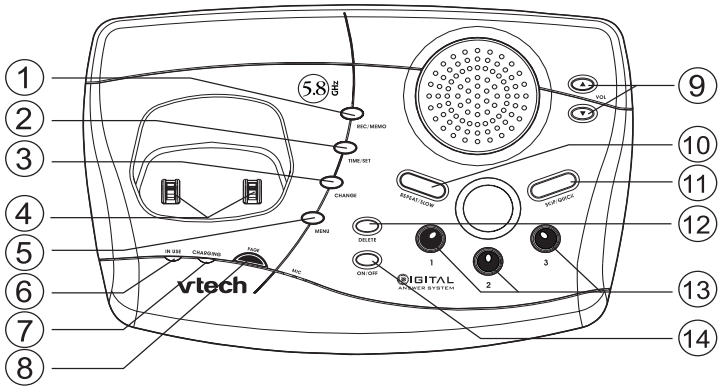

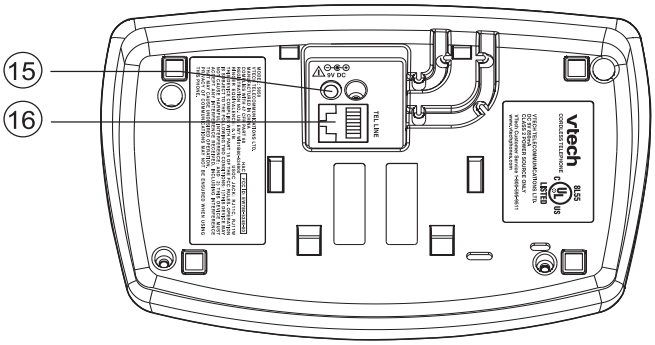

1.
2.
3.
4.
5.
6.
7.
8.
9.
10.
11.
12.
13.
14.
15.

Connecting power to Base Unit/Handset Charger

1. Plug the AC power adapter into an electrical outlet, and the DC connector into the bottom of the Base Unit.

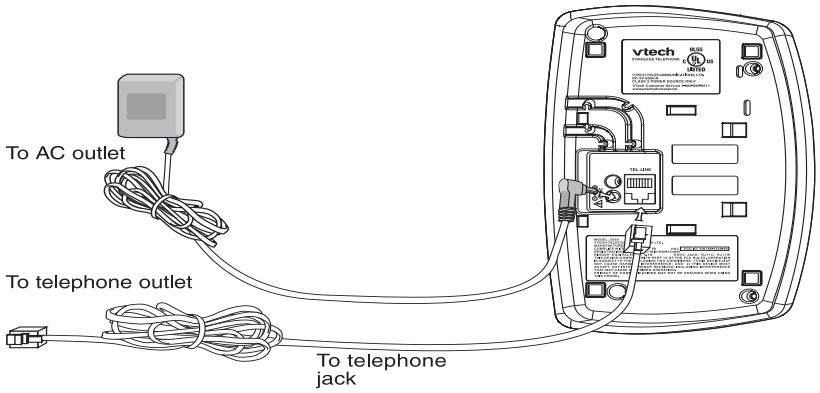

2. Choose the location for your Handset Charger, and plug its power supply into an electrical outlet.

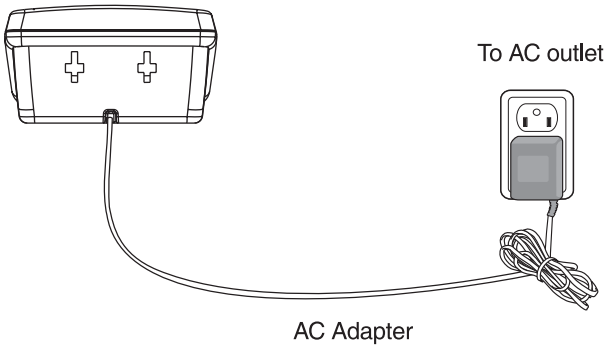

Installation of Battery Cells in Handset

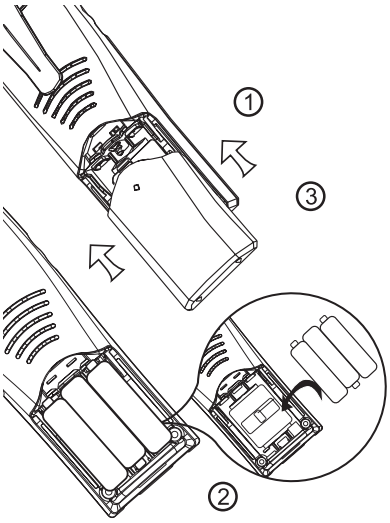

Follow the steps below:

1. Remove the battery cover by pressing on the indent and sliding downward.
2. Place the new battery cells in the Handset with the positive and negative poles aligned in the battery compartment.
3. Replace the battery cover by sliding it upwards.
4. If the new battery cells are not already charged, place the Handset in its Charger, and allow it to charge for 12 hours. After initial charge, a maintenance charge of 8 hours should be sufficient.

Charging of the Handset Battery Cells

The Handset of your cordless telephone is powered by rechargeable battery cells. It charges automatically whenever the Handset is in its charger.

You should charge the battery pack for 12 hours when you first receive your phone. You'll know the battery pack needs charging when:

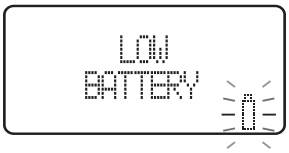

- The low battery message is displayed :
- The Handset seems completely dead, the LCD is completely clear and does not activate when you press the keys.

IMPORTANT:

1. Do not dispose of battery cell in a fire, the cell may explode.
2. Do not open or mutilate the battery cell. Toxic substances may be released, causing harm to eyes or skin.
3. Exercise care in handling battery cell in order to prevent an accidental short of the charge contacts, potentially causing the battery pack to overheat.
4. Do not dispose of this battery cell into household garbage. Please refer to the information concerning proper battery recycling.

5. Do not charge the battery cell with other electrical device.

Connecting to phone line

Plug one end of the telephone line cord into the jack on the back of the Base Unit. Plug the other end of this cord into the wall jack.

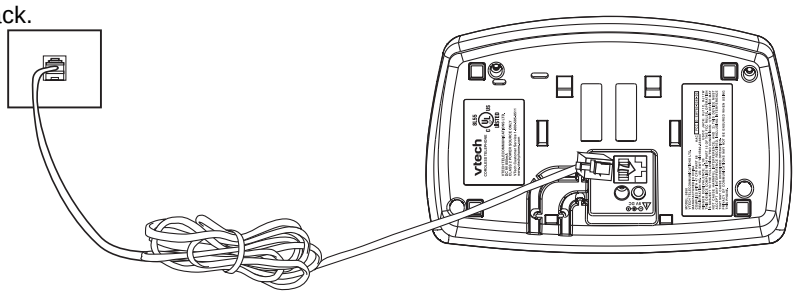

Checking for dial tone

After the battery is charged, press **ON** on the Handset. The Phone icon will appear on the Handset display, and you will hear dial tone. If not, see **In Case of Difficulty.**

Tone/Pulse selection

Your phone is preset for tone dialing. See **BASE SETTINGS** for details.

CAUTION: Use only the VTech power supply provided with your telephone.

IMPORTANT:

FOR MAXIMUM PERFORMANCE OF YOUR CORDLESS TELEPHONE SYSTEM:

1. Choose a central location for your Base Unit.
2. Install your Base Unit and Extension Handsets way from electronic equipment, such as personal computers, television sets and microwave ovens.
3. In locations where there are multiple cordless telephones, separate base units as much as possible.
4. Install your telephone equipment away from heat sources and sunlight.
5. Avoid excessive moisture, dust or extreme cold.

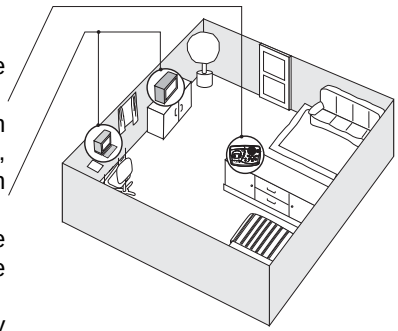

Wall Mounting

The Wall Mount brackets are designed for use on standard wall mount plates only. Wall mounting is optional.

1. Plug the AC adapters into an electrical outlet, and the DC connector to the bottom of the Base Unit.
2. Connect the telephone line cord to the jack on the bottom of the Base Unit, and the other end to the wall jack.
3. Line up the tabs on the wall mount adapters with the holes on the bottom of the Base Unit/back of the Handset Charger. Snap the wall mount bracket firmly in place.
4. Mount the Base Unit/Handset Charger on the wall. Position the Base Unit/ Handset Charger so the mounting studs will fit into the holes on the wall mount bracket. Slide Base Unit/Handset Charger down on the mounting studs until it locks into place.

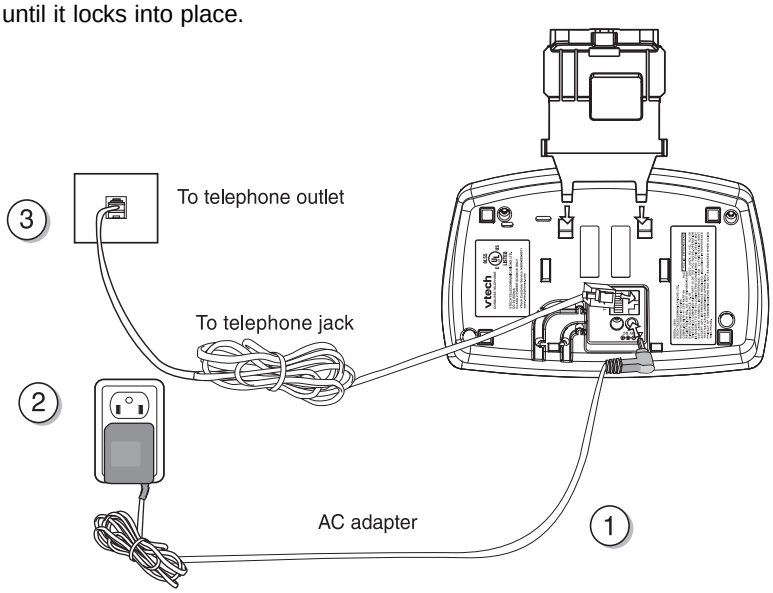

Handset and Base Indicators

Handset Icons

Icon	Description
MUTE	• Turns on when the microphone is muted
NEW	• Turns on when there are new call log entries.
18/8818:88PM	• CID date and time information
	• Turns on when the ringer is muted.
	• Low battery indicator and charging indicator